Linear Single Cell Li-Ion Battery Charger IC for Portable Applications

General Description

The RT9524H is a fully integrated single cell Li-ion battery charger IC ideal for portable applications. The RT9524H optimizes the charging task by using a control algorithm including pre-charge mode, fast charge mode and constant voltage mode. the input voltage range of the VIN pin can be as high as 28V. When the input voltage exceeds the OVP threshold, it will turn off the charging MOSFET to avoid overheating of the chip.

In RT9524H, the maximum charging current can be programmed with an external resistor. For USB application, the user can set the current to 100mA/500mA through the EN/SET pin. For the factory mode, the RT9524H can allow 4.35V/2.3A power pass through to support system operation. It also provides a 50mA LDO to support the power of peripheral circuit. The internal thermal feedback circuit regulates the die temperature to optimize the charge rate for all ambient temperatures. The RT9524H provides protection functions such as under voltage protection, over voltage protection for VIN supply and thermal protection for battery temperature.

The RT9524H is available in a WDFN-10L 3x2 package to achieve optimized solution for PCB space and thermal considerations.

Features

- **28V Maximum Rating for DC Adapter**
- **Internal Integrated Power MOSFETs**
- **Support 4.35V/2.3A Factory Mode**
- **50mA Low Dropout Voltage Regulator**
- **Status Pin Indicator**
- **Programmed Charging Current**
- **Under Voltage Lockout**
- **Over Voltage Protection**
- **Thermal Feedback Optimized Charge Rate**
- **RoHS Compliant and Halogen Free**

Applications

- Cellular Phones
- Digital Cameras
- PDAs and Smart Phones
- Portable Instruments

Marking Information

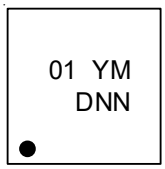

01: Product Code

YMDNN : Date Code

Simplified Application Circuit

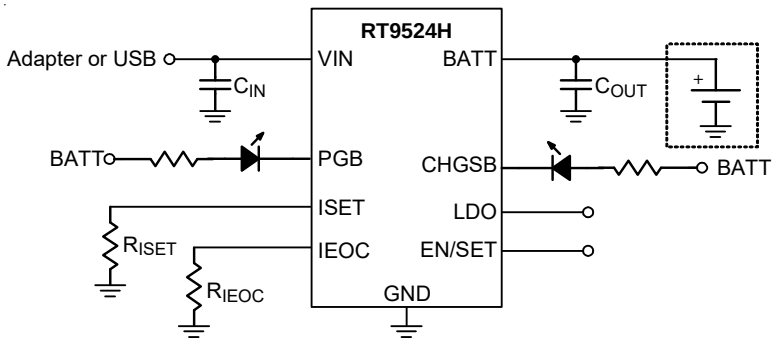

Copyright©2023 Richtek Technology Corporation. All rights reserved. RICHTEK is a registered trademark of Richtek Technology Corporation.

Ordering Information

RT9524H□□

- Package Type
  QW: WDFN-10L 3x2 (W-Type)
- Lead Plating System
  G: Richtek Green Policy Compliant

Note :

Richtek products are Richtek Green Policy compliant and compatible with the current requirements of IPC/JEDEC J-STD-020.

Pin Configuration

(TOP VIEW)

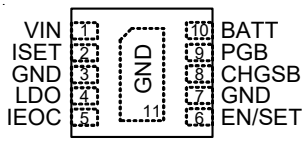

WDFN-10L 3x2

Functional Pin Description

Pin No.	Pin Name	Pin Function
1	VIN	Power Input.
2	ISET	Charging Current Setting.
3, 7, 11 (Exposed Pad)	GND	Ground. The exposed pad must be soldered to a large PCB and connected to GND for maximum power dissipation.
4	LDO	LDO Output (4.9V). This pin provides 50mA output current.
5	IEOC	End-of-Charge Current Setting. The I_{EOC} is from 5% to 50% Ichg-fast which is programmed by the ISET pin.
6	EN/SET	Enable and Operation Mode Setting.
8	CHGSB	Indicator Output for Charging Status.
9	PGB	Indicator Output for Power Status.
10	BATT	Battery Charge Current Output.

Functional Block Diagram

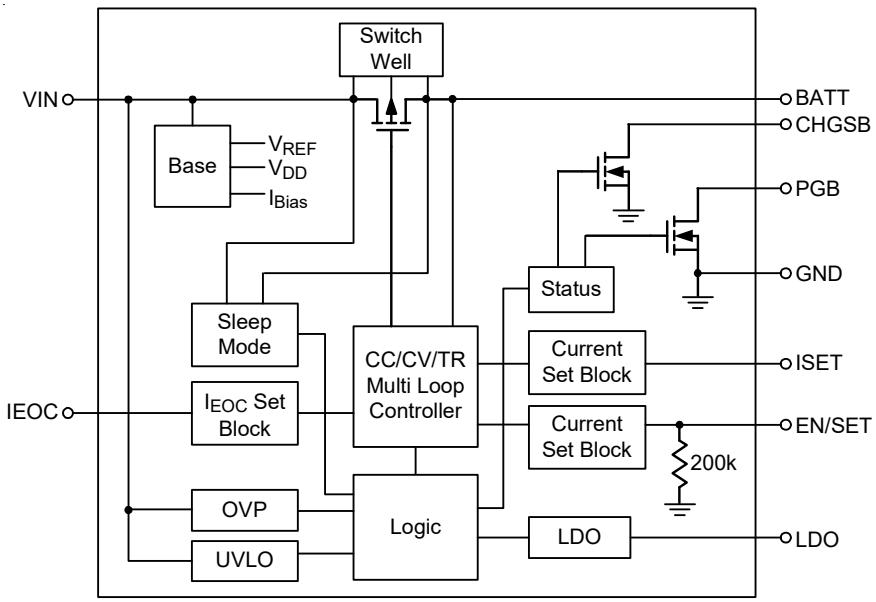

Copyright ©2023 Richtek Technology Corporation. All rights reserved. RICHTEK is a registered trademark of Richtek Technology Corporation.

Operation

The RT9524H is designed for single cell Li-Ion battery charger in portable applications.

Base Circuit

The Base circuit provides the internal power for VDD, V_{REF} reference voltage and bias current.

Power Switch with Switch Well Circuits

The main power switch between VIN and BATT is designed to control the charge current for battery. The switch well is designed to avoid the reverse current from battery to input power.

Sleep Mode

When the charger is only connected to battery with no input power, the charger will enter sleep mode and the leakage current from battery to the charger will be less than 10μA for low power consumption

Current Set Block

The charge current is adjustable from the ISET pin with an external resistor between the ISET and GND. The End-of-Charge current is also adjustable by an external resistor connected from the IEOC pin to GND. If the charging current is less than EOC current, the CHGSB pin will be pulled high.

Protection

The protection circuits include OVP, UVLO and OTP. When the protection circuit is triggered, the main power switch will be turned of to protect the charging system.

Multi-Loop Controller

The Multi-Loop controller controls the operation during the charging process. The controller will make sure the battery is well charged in a suitable current, voltage, and die temperature.

Status Indicator

The CHGSB and PGB pin indicate the charger and power condition. During the charging process, the CHGSB pin is pulled low. When the charger is under charge done condition or abnormal condition, the CHGSB will be high impedance. The PGB pin indicates the input power status at VIN pin. When the input power is normal, the PGB pin is pulled low.

Operation Mode

The RT9524H provides programmable output current mode setting including USB100, USB500 and Factory mode. The operation mode is programmable through the input pulse number at EN/SET pin. Under the factory mode, the output voltage is 4.35V and output current is up to 2.3A.

LDO

The RT9524H provides a LDO regulator to support the peripheral circuits. The output voltage is regulated to 4.9V and the maximum output current is 50mA.

Copyright©2023 Richtek Technology Corporation. All rights reserved. RICHTEK is a registered trademark of Richtek Technology Corporation.

Absolute Maximum Ratings (Note 1)

- Supply Input Voltage, V_{IN} ---------- –0.3V to 28V
- Other Pins ---------- –0.3V to 6V
- Power Dissipation, P_D @ T_A = 25°C
  WDFN-10L 3x2 ---------- 2.27W
- Package Thermal Resistance (Note 2)
  WDFN-10L 3x2, θ_{JA} ---------- 44°C/W
  WDFN-10L 3x2, θ_{JC} ---------- 11°C/W
- Lead Temperature (Soldering, 10 sec.) ---------- 260°C
- Junction Temperature ---------- 150°C
- Storage Temperature Range ---------- –65°C to 150°C

Recommended Operating Conditions (Note 3)

- Supply Input Voltage, V_{IN} ---------- 4.3V to 5.5V
- Junction Temperature Range ---------- –40°C to 125°C
- Ambient Temperature Range ---------- –20°C to 85°C

Electrical Characteristics

(V_{IN} = 5V, V_{BATT} = 4V, T_A = 25°C, unless otherwise specified)

Parameter	Symbol	Test Conditions	Min	Typ	Max	Unit
VIN POR Rising Threshold Voltage	V_{POR}		3.15	3.3	3.45	V
VIN POR Threshold Voltage Hysteresis			--	200	300	mV
VIN OVP Threshold Voltage	V_{OVP}		6.7	6.9	7.1	V
VIN OVP Threshold Voltage Hysteresis			--	200	300	mV
VIN – VOUT VOS Rising			--	75	150	mV
VIN – VOUT VOS Falling			18	32	--	mV
VIN Standby Current		V_{BATT} = 4.5V, EN/SET = High	--	250	300	μA
VIN Supply Current		V_{BATT} = 4.5V, EN/SET = Low	--	1	2	mA
VOUT Sleep Leakage Current			--	1	10	μA
VOUT Regulation		0°C to 85°C, I_{LOAD} = 0mA	4.303	4.35	4.397	V
Thermal Regulation			--	125	--	°C
OTP			--	155	--	°C
OTP Hysteresis			--	20	--	°C
PGB/CHGSB Sink Current			20	--	--	mA
Pre-Charge Threshold		V_{OUT} Rising	2.4	2.5	2.6	V
Fast-Charge to Pre-Charge Deglitch Time			--	25	--	ms
Pre-Charge Current	I_{PRECHG}	USB100 Mode	90	95	100	mA
		USB500 Mode or ISET Mode, ratio of fast-charge current	15	20	25	%
End of Charge Current (EOC)			--	R_{EOC}/K_{EOC}	--	%

Copyright ©2023 Richtek Technology Corporation. All rights reserved. RICHTEK is a registered trademark of Richtek Technology Corporation.

Parameter		Symbol	Test Conditions	Min	Typ	Max	Unit
IEOC Setting Current		I_{EOC}		70	75	80	μA
IEOC Setting K_{EOC}				180	200	220	Ω/%
VIN Power FET $R_{DS(ON)}$			I_{OUT} = 1A	--	280	512	mV
ISET Set Voltage		V_{ISET}		--	1.5	--	V
ISET Short Protect Threshold				320	--	460	Ω
ISET Short Protect Deglitch Time				--	1.5	--	ms
ISET Short Protect Maximum Current				--	2	--	A
VIN Charge Current		I_{CHRG}	As ISET Mode, R_{ISET} = 530	0.9	1	1.1	A
			As USB100 Mode	90	95	100	mA
			As USB500 Mode	380	395	415	mA
EN/SET Pull Low Resistor				--	200	--	kΩ
EN/SET Voltage	Logic-High	V_{IH}		1.4	--	--	V
	Logic-Low	V_{IL}		--	--	0.4	
LDO On-Resistance		$R_{DS(ON)}$			3	6	Ω
LDO Output Voltage		V_{LDO}		4.75	4.9	5.05	V
LDO Maximum Output Current				60	120	180	mA
Factory Mode V_{OUT}				4.263	4.35	4.437	V
Factory Mode Maximum Output Current				2.3	--	--	A
EN/SET Off Time			Timer to disable chip	1.5	--	--	ms
EN/SET Lock Time			Timer to lock pulse count	1.5	--	--	ms
EN/SET Duration	Logic-High			100	--	700	μs
	Logic-Low			100	--	700	μs

Note 1. Stresses beyond those listed "Absolute Maximum Ratings" may cause permanent damage to the device. These are stress ratings only, and functional operation of the device at these or any other conditions beyond those indicated in the operational sections of the specifications is not implied. Exposure to absolute maximum rating conditions may affect device reliability.

Note 2. θ_{JA} is measured at T_A = 25°C on a high effective thermal conductivity four-layer test board per JEDEC 51-7. θ_{JC} is measured at the exposed pad of the package.

Note 3. The device is not guaranteed to function outside its operating conditions.

Copyright©2023 Richtek Technology Corporation. All rights reserved. RICHTEK is a registered trademark of Richtek Technology Corporation.

Typical Application Circuit

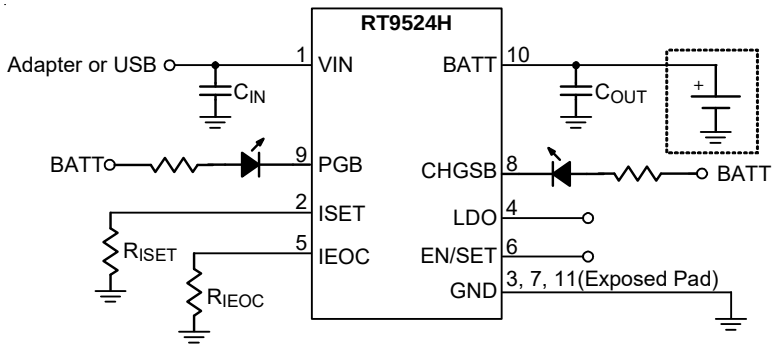

Copyright ©2023 Richtek Technology Corporation. All rights reserved. RICHTEK is a registered trademark of Richtek Technology Corporation.

Typical Operating Characteristics

Input OVP Threshold vs. Temperature

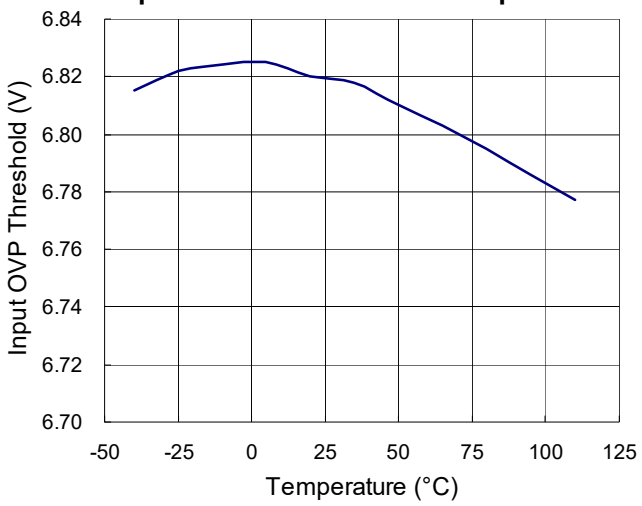

VOUT Sleep Leakage Current vs. Battery Voltage

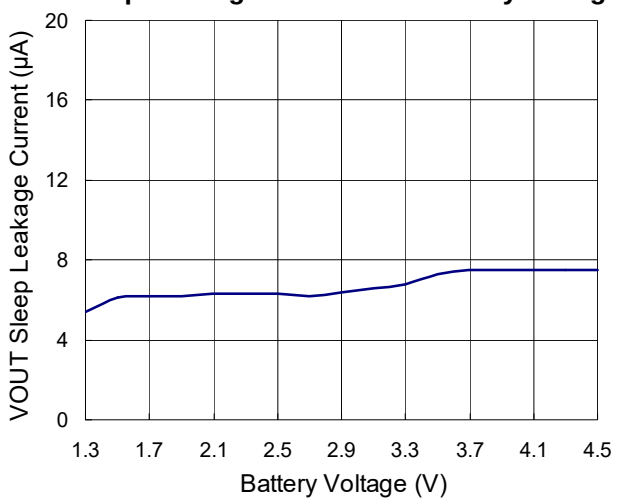

LDO Output Voltage vs. Output Current

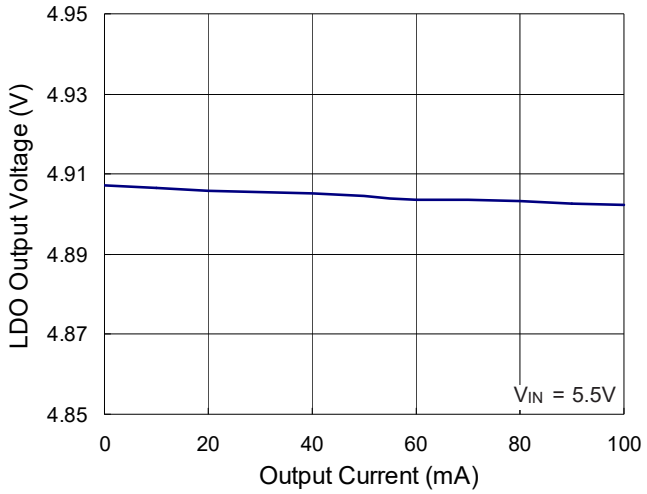

LDO Voltage vs. Temperature

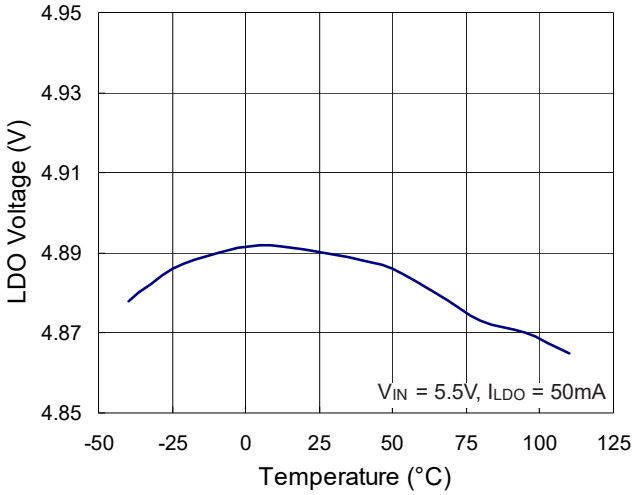

ISET Mode Charge Current vs. Input Voltage

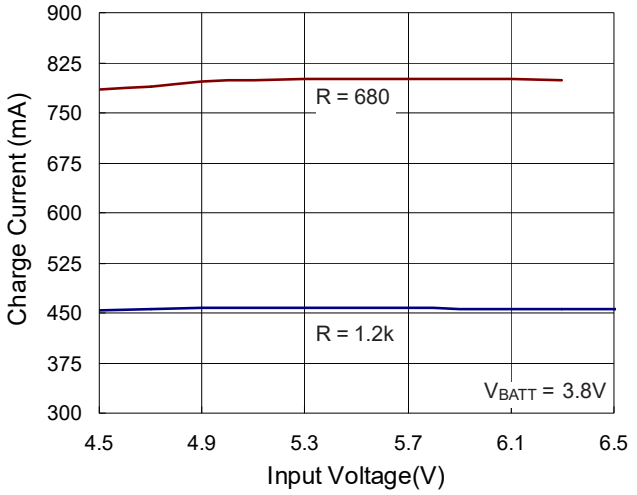

USB 500 Mode Charge Current vs. Input Voltage

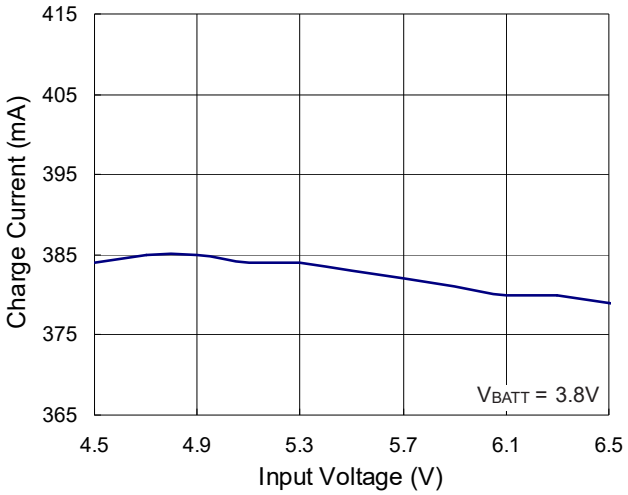

Copyright©2023 Richtek Technology Corporation. All rights reserved. RICHTEK is a registered trademark of Richtek Technology Corporation.

USB 100 Mode Charge Current vs. Input Voltage

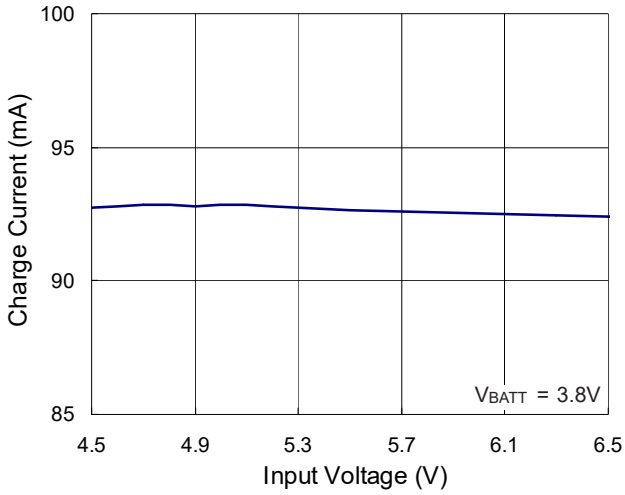

ISET Voltage vs. Input Voltage

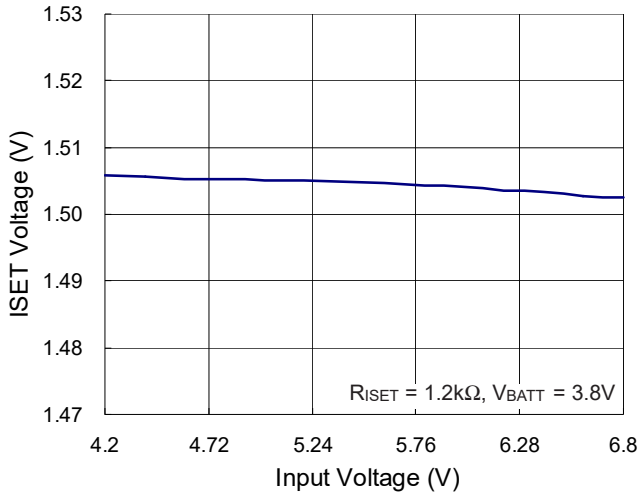

Power On

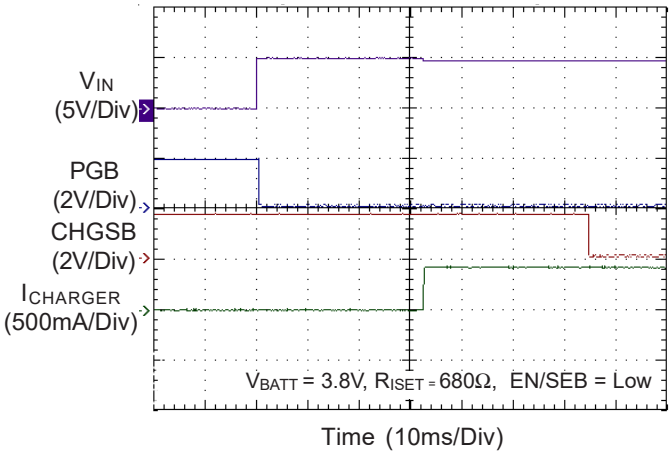

EN/SET Shut-Down

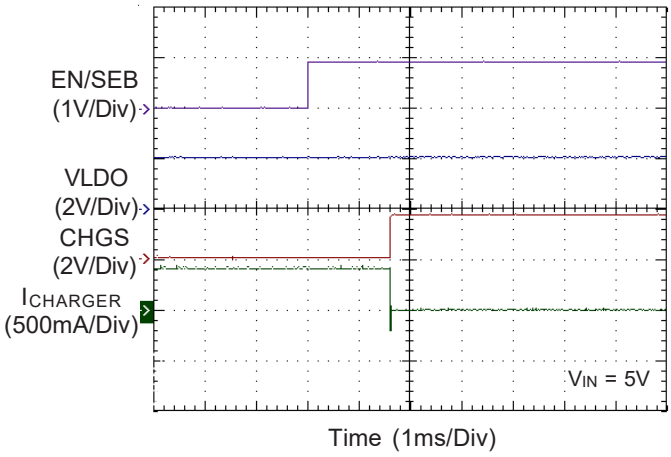

Charger Current--USB500 mode to ISET mode

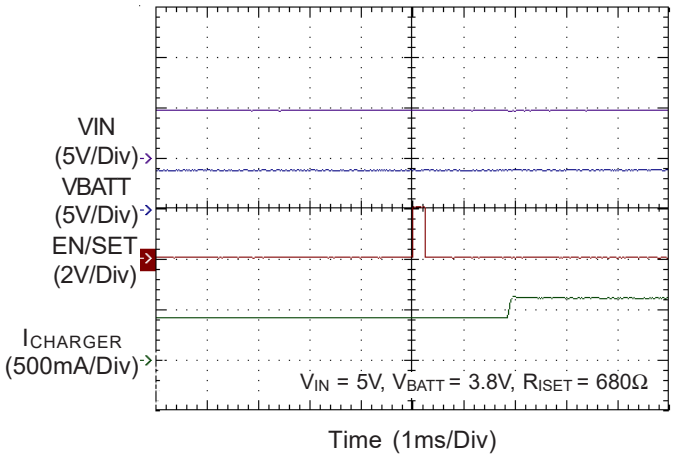

Charger Current--USB500 mode to USB100 mode

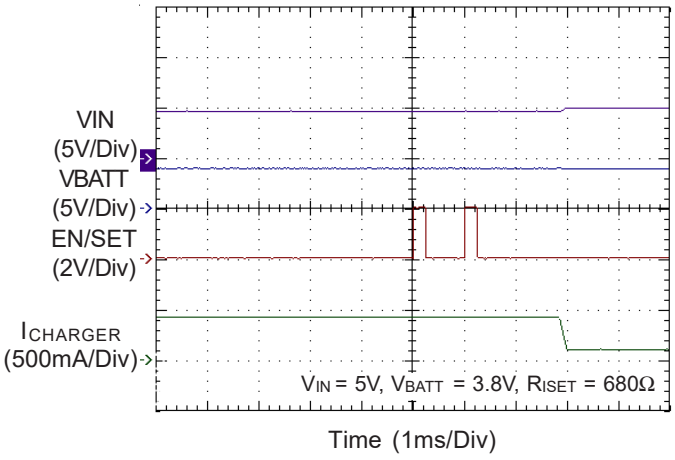

Copyright ©2023 Richtek Technology Corporation. All rights reserved. RICHTEK is a registered trademark of Richtek Technology Corporation.

LDO Load Transient Response

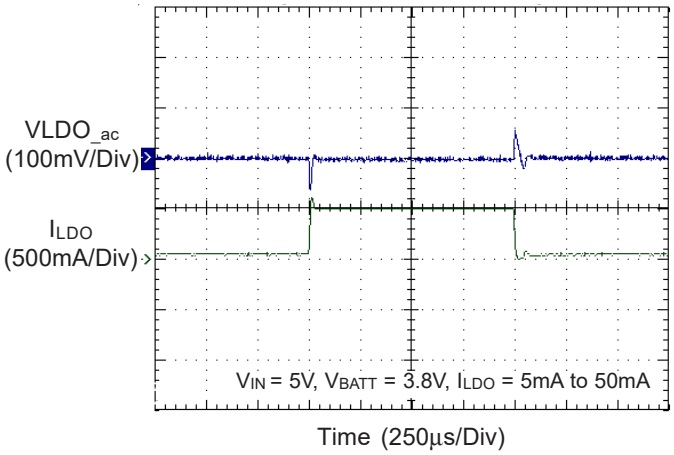

Factory Mode

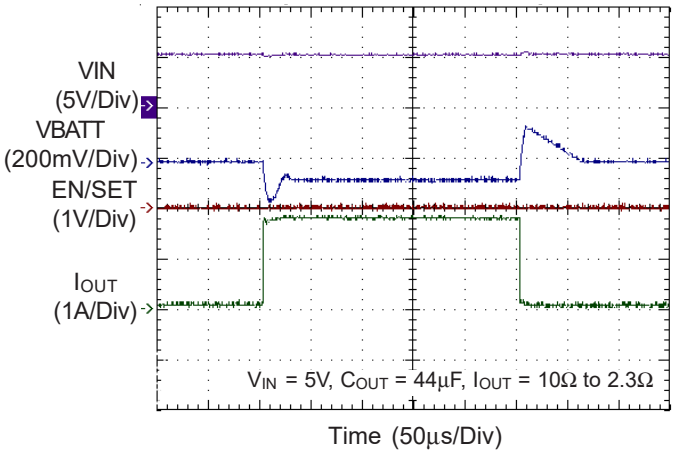

Copyright©2023 Richtek Technology Corporation. All rights reserved. RICHTEK is a registered trademark of Richtek Technology Corporation.

Application Information

Richtek's component specification does not include the following information in the Application Information section. Thereby no warranty is given regarding its validity and accuracy. Customers should take responsibility to verify their own designs and reserve suitable design margin to ensure the functional suitability of their components and systems.

Description

The RT9524H is a fully integrated low cost single-cell Li-Ion battery charger IC with a constant current mode (CC mode) or a constant voltage mode (CV mode). The charge current is programmable to USB100, USB500 or ISET mode and the CV mode voltage is fixed at 4.35V. The pre-charge threshold is fixed at 2.5V. If the battery voltage is below the pre-charge threshold, the RT9524H charges the battery with a trickle current until the battery voltage rises above the pre-charge threshold. The RT9524H is capable of being powered up from AC adapter and USB (Universal Serial Bus) port inputs. Moreover, the RT9524H include a linear regulator (LDO 4.9V, 50mA) for supplying low power external circuitry.

ACIN Over Voltage Protection

The input voltage is monitored by the internal comparator and the input over voltage protection threshold is set to 6.9V. However, input voltage over 28V will still cause damage to the RT9524H. When the input voltage exceeds the threshold, the comparator outputs a logic signal to turn off the power P-MOSFET to prevent the high input voltage from damaging the electronics in the handheld system. When the input over voltage condition is removed, the comparator re-enables the output by running through the soft-start.

Charger Enable and mode Setting

EN/SET is used to enable or disable the charger as well as to select the charge current limit. Drive the EN pin to low or leave it floating to enable the charger. The EN/SET pin has a 200kΩ internal pull down resistor. So, when left floating, the input is equivalent to logic low. Drive this pin to high to disable the charger. After the EN/SET pin pulls low for 50μs, the RT9524H enters the USB500 mode and wait for the setting current signal. EN/SET can be used to program the charge current during this cycle. The RT9524H will change its charge current by sending different pulse to EN/SET pin. If no signal is sent to EN/SET, the RT9524H will remain in USB500 mode. A correct period of time for high pulse is between 100μs and 700μs and the period of pulse to pulse must be between 100μs and 700μs to be properly read. Once EN/SET is held low for 1.5ms, the number of pulses is locked and sent to the control logic and then the mode changes. The RT9524H needs to be restarted to reset the charge current. Once the EN/SET input is held high for more than 1.5ms, the RT9524H is disabled.

Table 1. Pulse Counting Map for EN/SET Interface

Pulses	Charge Condition	MODE Control
0	USB500 Mode	Charge Current Limit
1	ISET Mode	Charge Current Limit
2	USB100 Mode	Charge Current Limit
3	Factory Mode	Enabled
≥4	USB100 Mode	Charge Current Limit

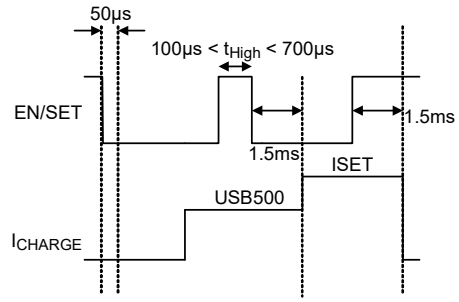

Figure .1 (a)

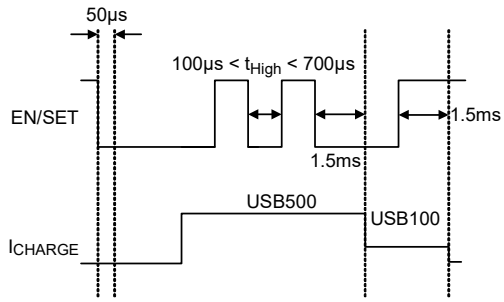

Figure .1 (b)

Copyright ©2023 Richtek Technology Corporation. All rights reserved. RICHTEK is a registered trademark of Richtek Technology Corporation.

Battery Charge Profile

The RT9524H charges a Li-Ion battery with a Constant Current (CC) or a Constant Voltage (CV).

The constant current is decided by the operation mode of USB100, USB500 or ISET mode. The constant current is set with the external resistor R_{ISET} and the constant voltage is fixed at 4.35V. If the battery voltage is below the Pre-Charge Threshold, the RT9524H charges the battery with a trickle current until the battery voltage rises above the trickle charge threshold. When the battery voltage reaches 4.35V, the charger enters CV mode and regulates the battery voltage at 4.35V to fully charge the battery without the risk of over charging.

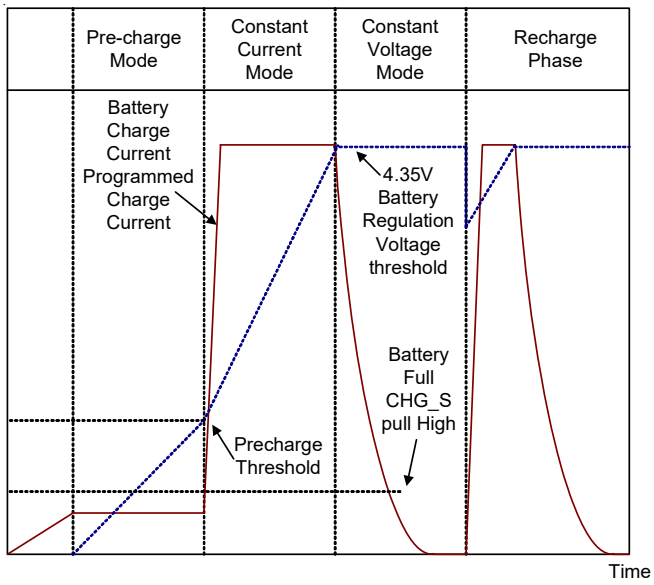

Figure 2

Battery Pre-Charge Current

During a charge cycle, if the battery voltage is below the pre-charge threshold, the RT9524H enters the pre-charge mode. This feature revives deeply discharged cells and protects battery. Under USB100 Mode, the pre-charge current is internally set to 95mA. When the RT9524H is under USB500 and ISET Mode, the pre-charge current is 20% of fast-charge current set by external resistor R_{ISET}.

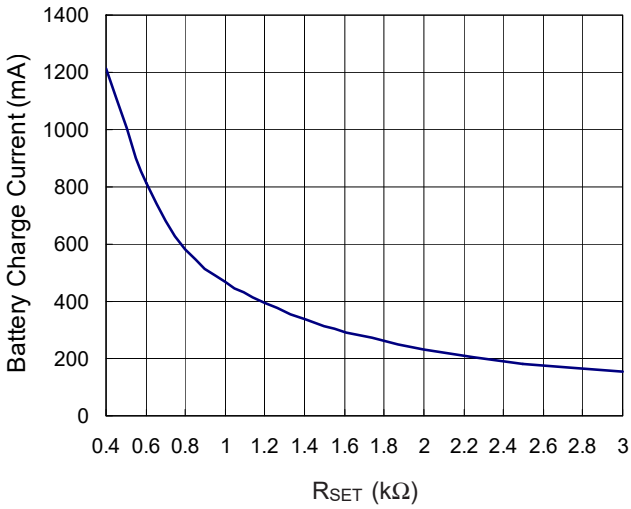

Figure 3

Battery Fast-Charge Current

ISET Mode

The RT9524H offers ISET pin to program the charge current. The resistor R_{ISET} is connected to ISET and GND. The parameter K_{ISET} is specified in the specification table.

$$I_{Charge} = \frac{K_{ISEF}}{R_{ISET}} \; ; K_{ISEF} = 530$$

USB500 and USB100 Mode

The fast-charge current is 95mA in USB100 mode and 395mA in USB500 mode. Note that if the fast-charge current set by external resistor is smaller than that in USB500 mode (395mA), the RT9524H charges the battery in ISET mode.

Battery Voltage Regulation (CV Mode)

The battery voltage regulation feedback is through the BATT pin. The RT9524H monitors the battery voltage between BATT and GND pins. When the battery voltage closes in on the battery regulation voltage threshold, the voltage regulation phase begins and the charging current begins to taper down. When the charging current falls below the programmed end-of-charge current threshold, the CHGSB pin goes high to indicate the termination of charge cycle.

The end-of-charge current threshold is set by the IEOC pin. The resistor R_{EOC} is connected to IEOC and GND. The parameters K_{EOC} and IEOC are specified in the specification table.

Copyright©2023 Richtek Technology Corporation. All rights reserved. RICHTEK is a registered trademark of Richtek Technology Corporation.

$$I_{EOC}(\%) = \frac{R_{EOC}}{K_{EOC}} \; ; K_{EOC} = 200$$

The current threshold of IEOC (%) is defined as the percentage of fast-charge current set by R_{ISET}. After the CHGSB pin is pulled high, the RT9524H still monitors the battery voltage. Charge current is resumed when the battery voltage goes to lower than the battery regulation voltage threshold.

Factory Mode

The RT9524H provides factory mode for supplies up to 2.3A for powering external loads with no battery installed and BATT is regulated to 4.35V. The factory mode allows the user to supply system power with no battery connected. In factory mode, thermal regulation is disabled but thermal protection (155°C) is still active. When using currents greater than 1.5A in factory mode, the user must limit the duty cycle at the maximum current to 20% with a maximum period of 10ms.

LDO

The RT9524H integrates one low dropout linear regulator (LDO) that supplies up to 50mA. The LDO is active whenever the input voltage is between POR threshold and OVP threshold. It is not affected by the EN/SET input. Note that the LDO current is independence and not monitored by the charge current limit.

Charge Status Outputs (CHGSB and PGB)

The open-drain CHGSB and PGB outputs indicate various charger operations as shown in the following table. These status pins can be used to drive LEDs or communicate to the host processor. Note that ON indicates the open-drain transistor is turned on and LED is bright.

Table 2

Condition	CHGSB	PGB
Input OVP	OFF	OFF
Input UVLO	OFF	OFF
Charge (CC Mode and CV Mode)	ON	ON
Charge Done (IFULL)	OFF	ON

Condition	PGB Deglitches Time	
	EN/SET is High	EN/SET is Low
Entering OVP (V_{IN} = 5.5V→10V)	0	100μs
Leaving OVP (V_{IN} = 10V→5.5V)	500μs	450μs
Entering SLEEP (V_{IN} = 5.5V→3.6V)	0	32ms
Leaving SLEEP (V_{IN} = 3.6V→5.5V)	500μs	500μs
Entering UVLO (V_{IN} = 5.5V→2.5V)	0	0
Leaving UVLO (V_{IN} = 2.5V→5.5V)	230μs	230μs

Sleep Mode

The RT9524H enters sleep mode if the power is removed from the input. This feature prevents draining the battery during the absence of input supply.

Temperature Regulation and Thermal Protection

In order to maximize charge rate, the RT9524H features a junction temperature regulation loop. If the power dissipation of the IC results in a junction temperature greater than the thermal regulation threshold (125°C), the RT9524H limits the charge current in order to maintain a junction temperature around the thermal regulation threshold (125°C). The RT9524H monitors the junction temperature, T_J, of the die and disconnects the battery from the input if T_J exceeds 125°C. This operation continues until junction temperature falls below thermal regulation threshold (125°C) by the hysteresis level. This feature prevents maximum power dissipation from exceeding typical design conditions.

Copyright ©2023 Richtek Technology Corporation. All rights reserved. RICHTEK is a registered trademark of Richtek Technology Corporation.

Selecting the Input and Output Capacitors

In most applications, all that is needed is a high-frequency decoupling capacitor on the input. A 1μF ceramic capacitor, placed in close proximity to input to GND, works well. In some applications depending on the power supply characteristics and cable length, it may be necessary to add an additional 10μF ceramic capacitor to the input. The RT9524H requires a small output capacitor for loop stability. A typical 1μF ceramic capacitor placed between the BATT pin and GND is sufficient.

Thermal Considerations

For continuous operation, do not exceed absolute maximum operation junction temperature. The maximum power dissipation depends on thermal resistance of the IC package, PCB layout, rate of surrounding airflow, and difference between junction and ambient temperature. The maximum power dissipation can be calculated by the following formula:

$P_{D(MAX)} = (T_{J(MAX)} - T_A) / \theta_{JA}$

where $T_{J(MAX)}$ is the maximum operation junction temperature, T_A is the ambient temperature, and θ_{JA} is the junction to ambient thermal resistance.

For recommended operating conditions specification of RT9524H, the maximum junction temperature is 125°C and T_A is the maximum ambient temperature. The junction to ambient thermal resistance, θ_{JA}, is layout dependent. For WDFN-10L 3x2 packages, the thermal resistance, θ_{JA}, is 44°C/W on a standard JEDEC 51-7 four-layer thermal test board. The maximum power dissipation at T_A = 25°C can be calculated by the following formula:

$P_{D(MAX)}$ = (125°C − 25°C) / (44°C/W) = 2.27W for WDFN-10L 3x2 package

The maximum power dissipation depends on the operating ambient temperature for fixed $T_{J(MAX)}$ and thermal resistance, θ_{JA}. The derating curve in Figure 4 allows the designer to see the effect of rising ambient temperature on the maximum power dissipation.

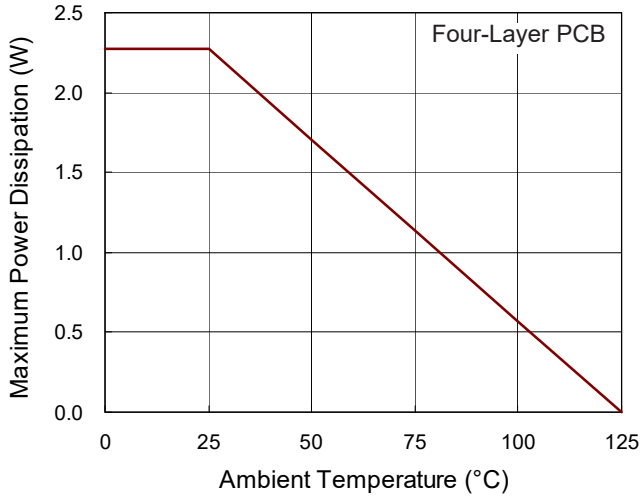

Figure 4. Derating Curve of Maximum Power Dissipation

Layout Consideration

The RT9524H is a fully integrated low cost single-cell Li-Ion battery charger IC ideal for portable applications. Careful PCB layout is necessary. For best performance, place all peripheral components as close to the IC as possible. A short connection is highly recommended. The following guidelines should be strictly followed when designing a PCB layout for the RT9524H.

- Input capacitor should be placed close to the IC and connected to ground plane. The trace of input in the PCB should be placed far away from the sensitive devices or shielded by the ground.
- The GND should be connected to a strong ground plane for heat sinking and noise protection.
- The connection of R_{ISET} and R_{IEOC} should be isolated from other noisy traces. The short wire is recommended to prevent EMI and noise coupling.
- Output capacitor should be placed close to the IC and connected to ground plane to reduce noise coupling.

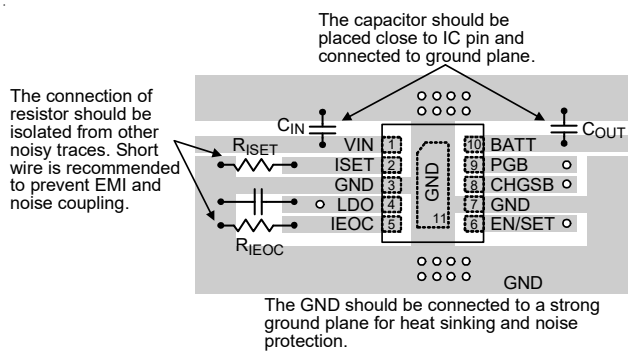

Figure 5. PCB Layout Guide

Copyright©2023 Richtek Technology Corporation. All rights reserved. RICHTEK is a registered trademark of Richtek Technology Corporation.

Outline Dimension

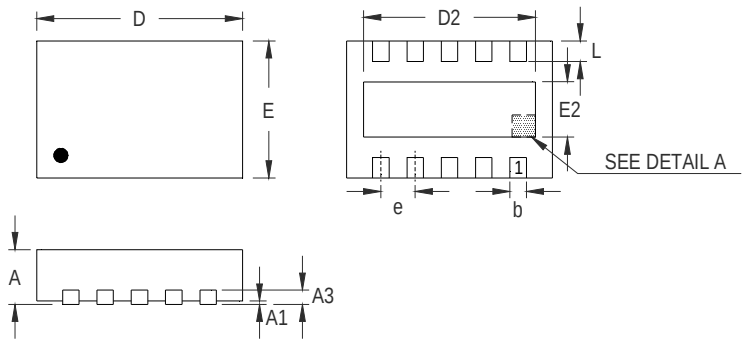

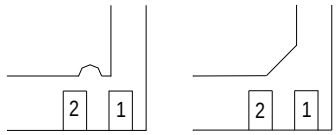

DETAIL A

Pin #1 ID and Tie Bar Mark Options

Note : The configuration of the Pin #1 identifier is optional, but must be located within the zone indicated.

Symbol	Dimensions In Millimeters		Dimensions In Inches	
	Min	Max	Min	Max
A	0.700	0.800	0.028	0.031
A1	0.000	0.050	0.000	0.002
A3	0.175	0.250	0.007	0.010
b	0.180	0.300	0.007	0.012
D	2.900	3.100	0.114	0.122
D2	2.450	2.550	0.096	0.100
E	1.900	2.100	0.075	0.083
E2	0.750	0.850	0.030	0.033
e	0.500		0.020	
L	0.250	0.350	0.010	0.014

W-Type 10L DFN 3x2 Package

Copyright ©2023 Richtek Technology Corporation. All rights reserved. RICHTEK is a registered trademark of Richtek Technology Corporation.

Footprint Information

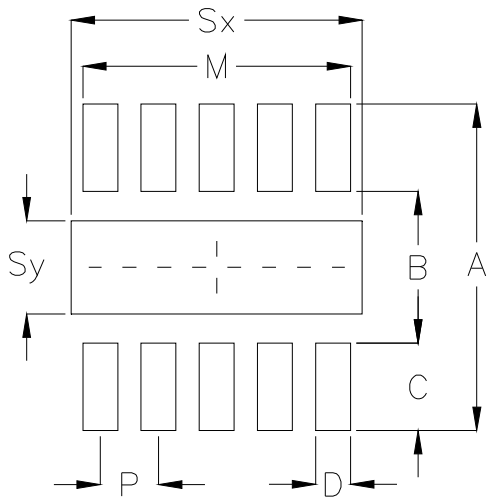

Package	Number of Pin	Footprint Dimension (mm)								Tolerance
		P	A	B	C	D	Sx	Sy	M	
V/W/U/XDFN3x2-10	10	0.50	2.80	1.30	0.75	0.30	2.50	0.80	2.30	±0.05

Copyright©2023 Richtek Technology Corporation. All rights reserved. RICHTEK is a registered trademark of Richtek Technology Corporation.

Packing Information

Tape and Reel Data

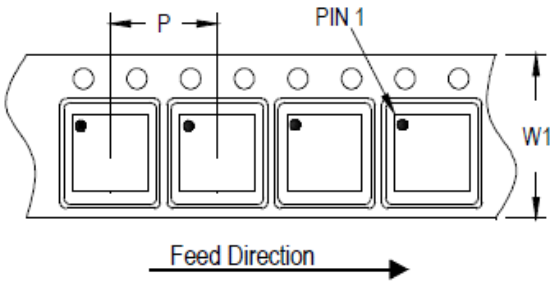

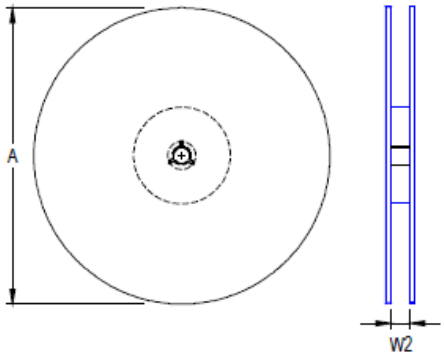

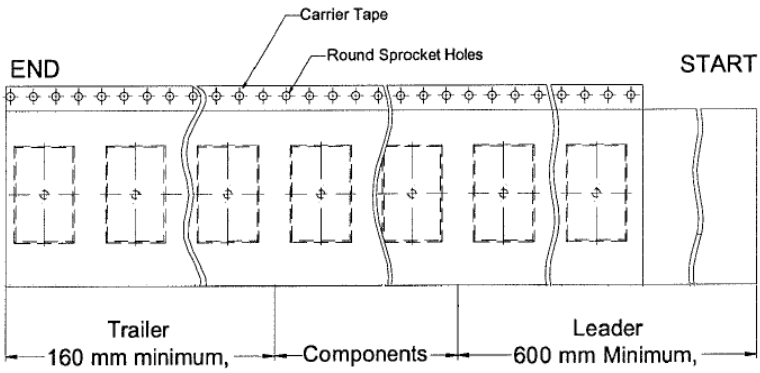

Package Type	Tape Size (W1) (mm)	Pocket Pitch (P) (mm)	Reel Size (A)		Units per Reel	Trailer (mm)	Leader (mm)	Reel Width (W2) Min./Max. (mm)
			(mm)	(in)				
QFN/DFN 3x2	12	8	180	7	1,500	160	600	12.4/14.4

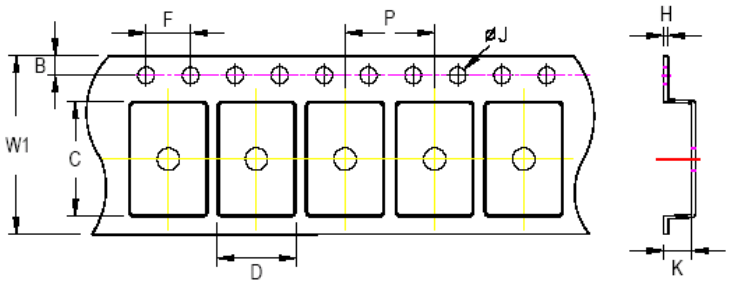

C, D and K are determined by component size. The clearance between the components and the cavity is as follows:

- For 12mm carrier tape: 0.5mm max.

Tape Size	W1	P		B		F		ØJ		H
	Max.	Min.	Max.	Min.	Max.	Min.	Max.	Min.	Max.	Max.
12mm	12.3mm	7.9mm	8.1mm	1.65mm	1.85mm	3.9mm	4.1mm	1.5mm	1.6mm	0.6mm

Copyright©2023 Richtek Technology Corporation. All rights reserved. RICHTEK is a registered trademark of Richtek Technology Corporation.

Tape and Reel Packing

Step	Photo/Description	Step	Photo/Description
1	Reel 7”	4	3 reels per inner box **Box A**
2	HIC & Desiccant (1 Unit) inside	5	12 inner boxes per outer box
3	Caution label is on backside of Al bag	6	Outer box **Carton A**

Container / Package	Reel		Box				Carton			
	Size	Units	Item	Size(cm)	Reels	Units	Item	Size(cm)	Boxes	Unit
QFN & DFN 3x2	7”	1,500	Box A	18.3*18.3*8.0	3	4,500	Carton A	38.3*27.2*38.3	12	54,000
			Box E	18.6*18.6*3.5	1	1,500	For Combined or Partial Reel.			

Copyright©2023 Richtek Technology Corporation. All rights reserved. RICHTEK is a registered trademark of Richtek Technology Corporation.

Packing Material Anti-ESD Property

Surface Resistance	Aluminum Bag	Reel	Cover tape	Carrier tape	Tube	Protection Band
Ω/cm^2	**10^4 to 10^{11}**	**10^4 to 10^{11}**	**10^4 to 10^{11}**	**10^4 to 10^{11}**	**10^4 to 10^{11}**	**10^4 to 10^{11}**

Richtek Technology Corporation

5F, No. 20, Taiyuen Street, Chupei City

Hsinchu, Taiwan, R.O.C.

Tel: (8863)5526789

Richtek products are sold by description only. Richtek reserves the right to change the circuitry and/or specifications without notice at any time. Customers should obtain the latest relevant information and data sheets before placing orders and should verify that such information is current and complete. Richtek cannot assume responsibility for use of any circuitry other than circuitry entirely embodied in a Richtek product. Information furnished by Richtek is believed to be accurate and reliable. However, no responsibility is assumed by Richtek or its subsidiaries for its use; nor for any infringements of patents or other rights of third parties which may result from its use. No license is granted by implication or otherwise under any patent or patent rights of Richtek or its subsidiaries.

Datasheet Revision History

Version	Date	Description	Item
01	2023/8/11	Modify	Marking Information on P1 Ordering Information on P1 Application Information on P10 Footprint Information on P15 Packing Information on P16, 17, 18

Copyright©2023 Richtek Technology Corporation. All rights reserved. RICHTEK is a registered trademark of Richtek Technology Corporation.