RICHTEK®

RT9527J/JH/JA

Single-Cell Li-Ion Battery Charger with Adjustable Charging Current for Portable Applications

1 General Description

The RT9527J/JH/JA is a low-cost single-cell Li-ion battery charger for low charge current applications.

The RT9527J/JH/JA can be powered via an AC adapter or USB port and enters sleep mode when power is removed. It uses a control algorithm to optimize charging, featuring pre-charge, fast-charge, and constant voltage modes. The device maintains the battery in a fully charged condition by consistently operating in constant voltage mode. Charge current can be adjusted with an external resistor. Internal thermal feedback regulates the die temperature to optimize charge rates under varying ambient conditions. The device supports a maximum VIN of 28V and features both undervoltage and overvoltage protection for the AC adapter input.

The RT9527J/JH/JA is available in the WDFN-8L 2x2 package. The recommended junction temperature range is –40°C to 125°C, and the ambient temperature range is –40°C to 85°C.

2 Features

- **28V Maximum Rating for AC Adapter**
- **Internal Integrated Power FETs**
- **Adjustable Charging Current**
- **Programmable Safe Charge Timer**
- **NTC Thermistor Input**
- **Reverse Battery Protection**
- **The ISET Pin Short Protection**
- **Charge Status Indicator**
- **AC Adapter Power-Good Indicator**
- **End of Charge Current is set at 10% of the Fast-Charge Current**
- **Undervoltage Protection**
- **Overvoltage Protection**
- **Battery Pack Temperature Monitoring (Hot, Warm, Cool, and Cold 4 Thresholds)**
- **Thermal Feedback Optimized Charge Rate**
- **Small Thermally Enhanced 8-Lead WDFN Package**

3 Applications

- Cellular Phones
- Digital Cameras
- Smart Phones
- Portable Instruments

4 Simplified Application Circuit

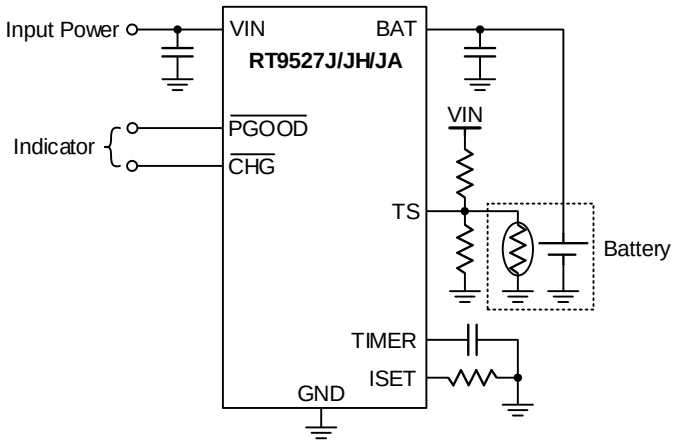

Copyright © 2024 Richtek Technology Corporation. All rights reserved. RICHTEK is a registered trademark of Richtek Technology Corporation.

5 Ordering Information

RT9527J/JH/JA □□

Package Type[1]
QW: WDFN-8L 2x2 (W-Type)

Lead Plating System
G: Richtek Green Policy Compliant[2]

Battery Voltage Regulation
J: 4.2V
JH: 4.35V
JA: 4.4V

Note 1.

- Marked with [1] indicated: Compatible with the current requirements of IPC/JEDEC J-STD-020.
- Marked with [2] indicated: Richtek products are Richtek Green Policy compliant.

6 Marking Information

RT9527JGQW

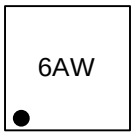

6A: Product Code
W: Date Code

RT9527JHGQW

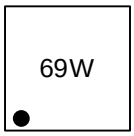

69: Product Code
W: Date Code

RT9527JAGQW

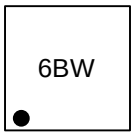

6B: Product Code
W: Date Code

Copyright © 2024 Richtek Technology Corporation. All rights reserved. RICHTEK is a registered trademark of Richtek Technology Corporation.

Table of Contents

1 General Description 1
2 Features 1
3 Applications 1
4 Simplified Application Circuit 1
5 Ordering Information 2
6 Marking Information 2
7 Pin Configuration 4
8 Functional Pin Description 4
9 Functional Block Diagram 4
10 Absolute Maximum Ratings 5
11 Recommended Operating Conditions 5
12 Electrical Characteristics 5
13 Typical Application Circuit 8
14 Typical Operating Characteristics 9
15 Operation 11
15.1 Charging Current Setting 11
15.2 UVLO 11
15.3 OVP 11
15.4 Switch Well 11
15.5 Sleep Mode 11
15.6 CC/CV/TR Multi-Loop Controller 11
15.7 Battery Pack Temperature Monitoring 11
15.8 $\overline{\text{PGOOD}}$ 11
15.9 $\overline{\text{CHG}}$ 11
15.10 TIMER 11
16 Application Information 12
16.1 Pre-Charge Mode 12
16.2 Fast-Charge Mode 12
16.3 Constant Voltage Mode 12
16.4 Recharge Mode 12
16.5 $\overline{\text{CHG}}$ Indicator 12
16.6 $\overline{\text{PGOOD}}$ Indicator 13
16.7 Charge Termination 13
16.8 ISET Pin Short Protection 13
16.9 Reverse Battery Protection 13
16.10 Temperature Regulation 13
16.11 Sleep Mode 13
16.12 Battery Pack Temperature Monitoring 13
16.13 Time Fault 14
16.14 Thermal Considerations 15
16.15 Layout Considerations 15
17 Outline Dimension 17
18 Footprint Information 18
19 Packing Information 19
19.1 Tape and Reel Data 19
19.2 Tape and Reel Packing 20
19.3 Packing Material Anti-ESD Property 21
20 Datasheet Revision History 22

Copyright © 2024 Richtek Technology Corporation. All rights reserved. RICHTEK is a registered trademark of Richtek Technology Corporation.

7 Pin Configuration

(TOP VIEW)

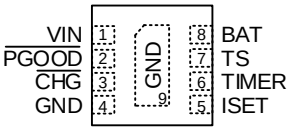

WDFN-8L 2x2

8 Functional Pin Description

Pin No.	Pin Name	Pin Function
1	VIN	Supply voltage input. VIN can withstand input voltages up to 28V.
2	$\overline{\text{PGOOD}}$	Power good status output. It is an active-low, open-drain output.
3	$\overline{\text{CHG}}$	Charger status output. It is an active-low, open-drain output.
4, 9 (Exposed Pad)	GND	Ground. The exposed pad must be soldered to a strong ground plane for maximum power dissipation.
5	ISET	Charge current setting input.
6	TIMER	Safe-charge timer setting input.
7	TS	Temperature sense input. Connect the TS pin to the battery's thermistor. Charging depends on the battery temperature. If the temperature is too high or too low, charging stops until the temperature returns to an acceptable range. It is recommended to use a 103AT-2 thermistor for optimal performance.
8	BAT	Charge current output to the battery.

9 Functional Block Diagram

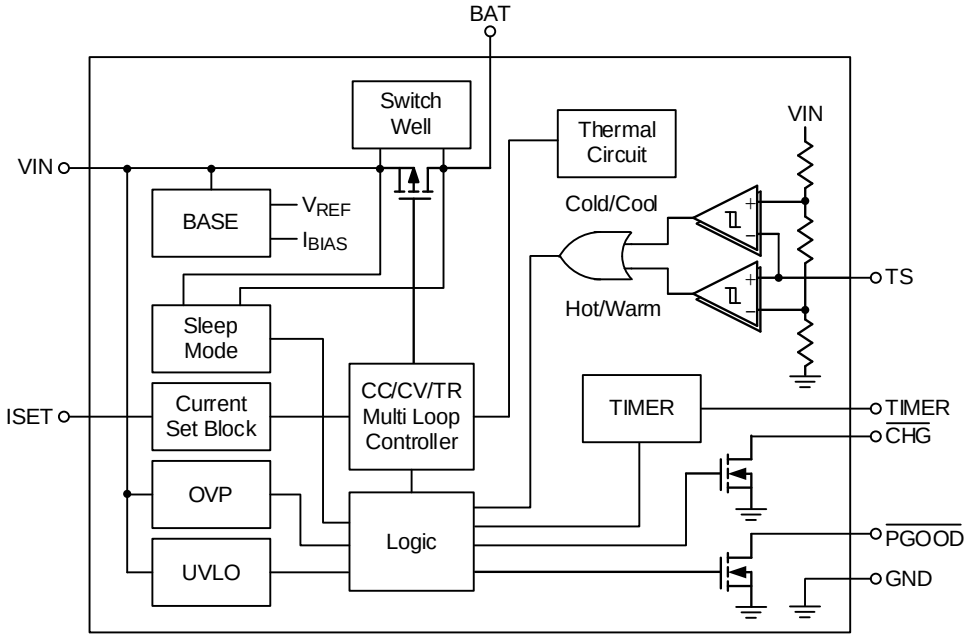

Copyright © 2024 Richtek Technology Corporation. All rights reserved. RICHTEK is a registered trademark of Richtek Technology Corporation.

10 Absolute Maximum Ratings

(Note 2)

- Supply Input Voltage, VIN ---------- –0.3V to 28V
- $\overline{CHG}$, $\overline{PGOOD}$, TS ---------- –0.3V to 28V
- Other Pins ---------- –0.3V to 6V
- Power Dissipation, P_D @ T_A = 25°C

  WDFN-8L 2x2 (BSC) ---------- 2.19W
- Package Thermal Resistance (Note 3)

  WDFN-8L 2x2, θ_{JA} ---------- 45.5°C/W

  WDFN-8L 2x2, θ_{JC} ---------- 11.5°C/W
- Lead Temperature (Soldering, 10 sec.) ---------- 260°C
- Junction Temperature ---------- 150°C
- Storage Temperature Range ---------- –65°C to 150°C
- ESD Susceptibility (Note 4)

  HBM (Human Body Model) ---------- 2kV

Note 2. Stresses beyond those listed under "Absolute Maximum Ratings" may cause permanent damage to the device. These are stress ratings only, and functional operation of the device at these or any other conditions beyond those indicated in the operational sections of the specifications is not implied. Exposure to absolute maximum rating conditions may affect device reliability.

Note 3. θ_{JA} is simulated under natural convection (still air) at T_A = 25°C with the component mounted on a high effective-thermal-conductivity four-layer test board on a JEDEC 51-7 thermal measurement standard. θ_{JC} is simulated at the case top of the package.

Note 4. Devices are ESD sensitive. Handling precautions are recommended.

11 Recommended Operating Conditions

(Note 5)

- Supply Input Voltage, VIN ---------- 4.4V to 6V
- Ambient Temperature Range ---------- –40°C to 85°C
- Junction Temperature Range ---------- –40°C to 125°C

Note 5. The device is not guaranteed to function outside its operating conditions.

12 Electrical Characteristics

(V_{IN} = 5V, V_{BAT} = 4V, T_J = 25°C, unless otherwise specified.)

Parameter	Symbol	Test Conditions	Min	Typ	Max	Unit
Supply Input						
VIN Undervoltage-Lockout Threshold	V_{UVLO}	V_{IN} = 0V to 5V	3.1	3.3	3.5	V
VIN Undervoltage-Lockout Hysteresis	V_{UVLO_HYS}	V_{IN} = 5V to 0V	--	240	--	mV
VIN – BAT VOS Rising	V_{OS_R}		--	100	200	mV
VIN – BAT VOS Falling	V_{OS_F}		10	50	--	mV

Copyright © 2024 Richtek Technology Corporation. All rights reserved. RICHTEK is a registered trademark of Richtek Technology Corporation.

Parameter	Symbol	Test Conditions	Min	Typ	Max	Unit
VIN Standby Current	I_{Q_STBY}	V_{BAT} = 4.5V	--	1	2	mA
BAT Sleep Leakage Current	I_{SLP}	V_{IN} = 0V	--	--	1	μA
Voltage Regulation						
Battery Voltage Regulation	V_{REG}	RT9527J, T_J = 0°C to 85°C	4.158	4.2	4.242	V
		RT9527JH, T_J = 0°C to 85°C	4.306	4.35	4.394	
		RT9527JA, T_J = 0°C to 85°C	4.356	4.4	4.444	
Re-Charge Threshold	V_{RECHG}	Battery regulation – Recharge level	60	100	140	mV
VIN Power MOSFET On-Resistance	R_{DSON}	I_{BAT} = 450mA	--	0.8	--	Ω
Current Regulation						
VIN Charge Setting Range	I_{CHG}		10	--	600	mA
Fast-Charge Current Factor	K_{CHG_F1}	I_{CHG_F1} = K_{CHG_F1} / R_{ISET}, I_{CHG_F1} = 10mA to 40mA	510	600	690	AΩ
	K_{CHG_F2}	I_{CHG_F2} = K_{CHG_F2} / R_{ISET}, I_{CHG_F2} = 40mA to 600mA	570	600	630	
Pre-Charge Current Factor	K_{CHG_P}	I_{CHG_P} = K_{CHG_P} / R_{ISET}	30	60	90	AΩ
Pre-Charge						
BAT Pre-Charge Threshold	V_{PREC}	V_{BAT} falling	2.7	2.8	2.9	V
BAT Pre-Charge Threshold Hysteresis	V_{PREC_HYS}		--	200	--	mV
Charge Termination						
Termination Current Ratio	I_{TERMI}	V_{BAT} > V_{PREC}, I_{CHG} < I_{TERMI}, $\overline{CHG}$ = L to H	5	10	15	%
Protection						
Thermal Regulation Threshold	T_{TR}		--	125	--	°C
Overvoltage Protection	V_{OVP}		6.2	6.5	6.8	V
Overvoltage Protect Hysteresis	V_{OVP_HYS}		--	0.2	--	V
The ISET Pin Short Protection	R_{SHORT}		375	500	625	Ω
NTC						
Cold Temperature Fault Threshold Voltage	V_{COLD}	Rising threshold	60	61	62	%V_{IN}
Cold Temperature Fault Threshold Hysteresis	V_{COLD_HYS}		--	2	--	%V_{IN}
Hot Temperature Fault Threshold Voltage	V_{HOT}	Falling threshold	29	30	31	%V_{IN}
Hot Temperature Fault Threshold Hysteresis	V_{HOT_HYS}		--	2	--	%V_{IN}
Cool Temperature Threshold Voltage	V_{COOL}	Rising threshold Charging current reduced to 20% of ISET	54	56	58	%V_{IN}
Cool Temperature Threshold Voltage Hysteresis	V_{COOL_HYS}		--	2	--	%V_{IN}

Copyright © 2024 Richtek Technology Corporation. All rights reserved. RICHTEK is a registered trademark of Richtek Technology Corporation.

Parameter	Symbol	Test Conditions	Min	Typ	Max	Unit
Warm Temperature Threshold Voltage	V_{WARM}	Falling threshold Charging current reduced to 50% of ISET VREG set to 4.1V	33	35	37	$\%V_{IN}$
Warm Temperature Threshold Voltage Hysteresis	V_{WARM_HYS}		--	2	--	$\%V_{IN}$
Timer						
Pre-Charge Fault Time	t_{PCHG}	C_{TIMER} = 1μF (1 / 8 x t_{FCHG})	1440	1800	2160	s
Fast-Charge Fault Time	t_{FCHG}	C_{TIMER} = 1μF	11520	14400	17280	s
Others						
$\overline{PGOOD}$ Pull-Down Voltage	$V_{\overline{PGOOD}}$	$I_{\overline{PGOOD}}$ = 5mA	--	200	--	mV
$\overline{CHG}$ Pull-Down Voltage	$V_{\overline{CHG}}$	$I_{\overline{CHG}}$ = 5mA	--	200	--	mV
$\overline{PGOOD}$ Deglitch Time	$t_{DEGLITCH_\overline{PGOOD}}$	Time measured from the edge V_{IN} = 0V to 5V in 1μs to $\overline{PGOOD}$ = L	--	2	--	ms
Input Overvoltage Blanking Time	t_{BLK_OVP}		1	50	100	μs
Input Overvoltage Recovery Time	t_{OVP_R}		0.1	2	4	ms
Pre-Charge to Fast-Charge Deglitch Time	$t_{DEGLITCH_PF}$		10	25	45	ms
Fast-Charge to Pre-Charge Deglitch Time	$t_{DEGLITCH_FP}$		10	25	45	ms
Termination Deglitch Time	$t_{DEGLITCH_TERMI}$		8	25	45	ms
Recharge Deglitch Time	$t_{DEGLITCH_RECHG}$		40	100	160	ms
Sleep Deglitch Time	$t_{DEGLITCH_ON\text{-}IN}$		10	25	45	ms
Battery Pack Temperature Fault Detection Deglitch Time	$t_{DEGLITCH_TS}$		8	25	45	ms

Copyright © 2024 Richtek Technology Corporation. All rights reserved. RICHTEK is a registered trademark of Richtek Technology Corporation.

13 Typical Application Circuit

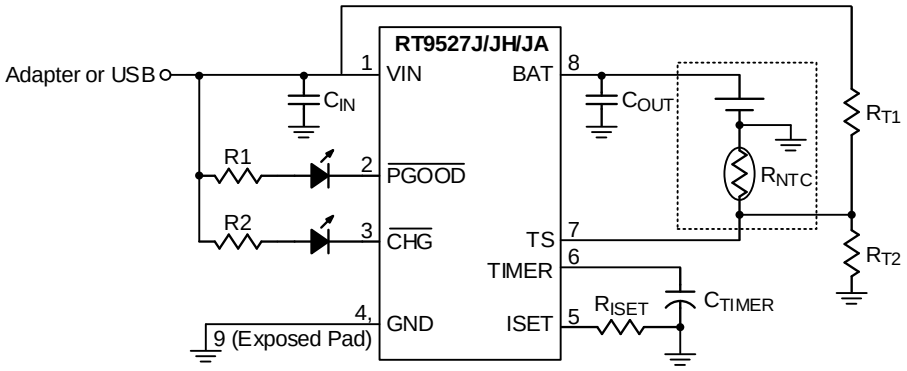

Copyright © 2024 Richtek Technology Corporation. All rights reserved. RICHTEK is a registered trademark of Richtek Technology Corporation.

14 Typical Operating Characteristics

Charge On/Off Control from VIN

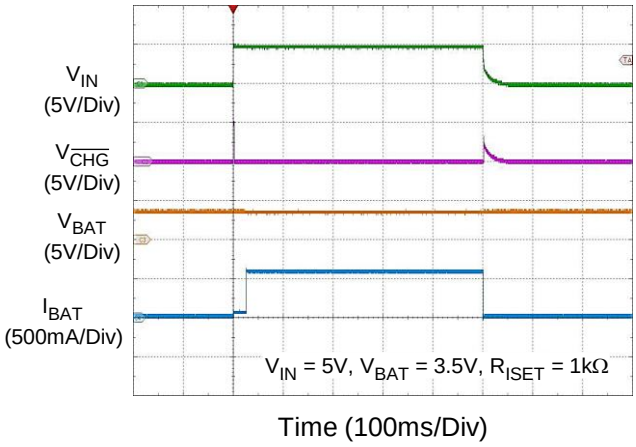

TS Inserted and Removed

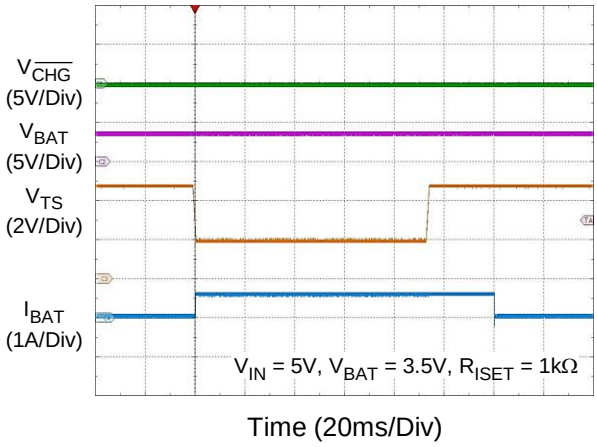

VIN Hot-Plug with NTC and without Battery

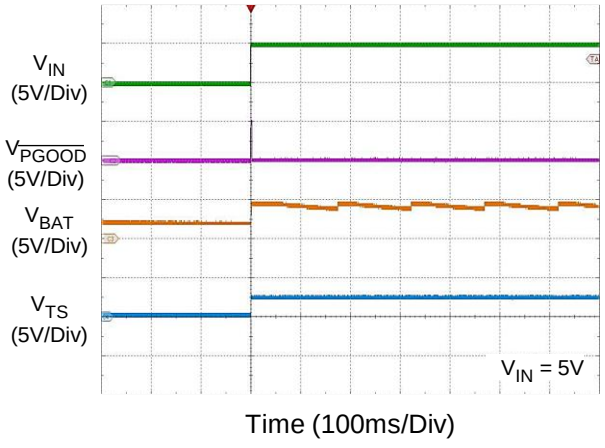

VIN Hot-Plug without NTC and Battery

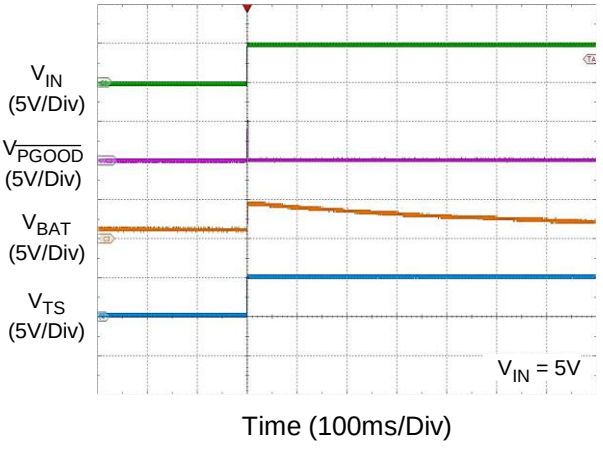

VIN Hot-Plug with NTC and Battery

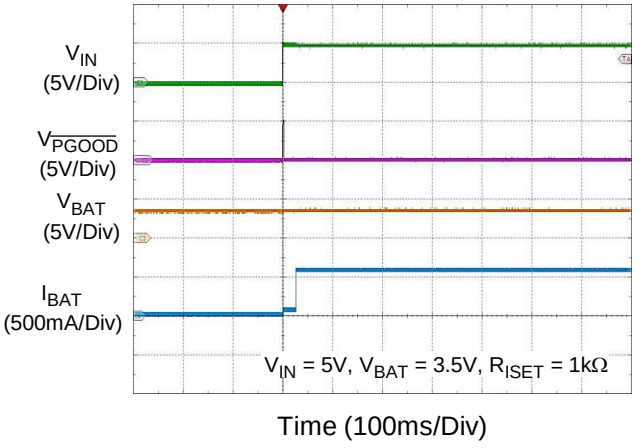

VIN Overvoltage Protection

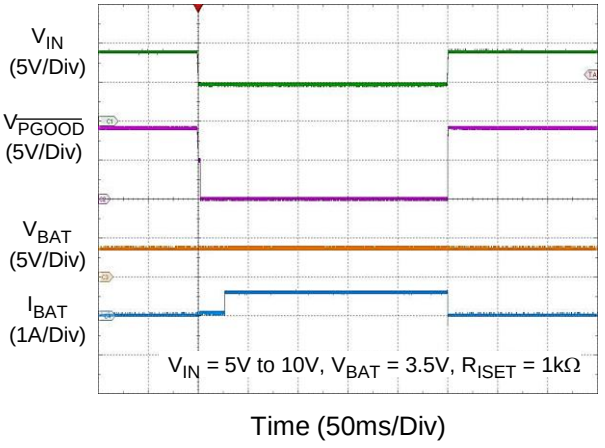

Copyright © 2024 Richtek Technology Corporation. All rights reserved. RICHTEK is a registered trademark of Richtek Technology Corporation.

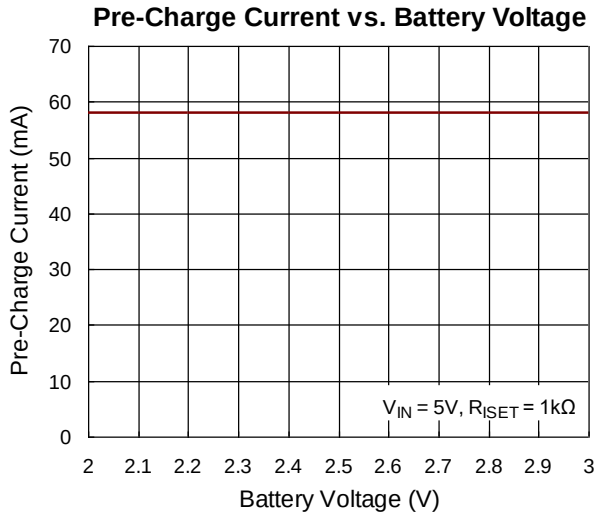

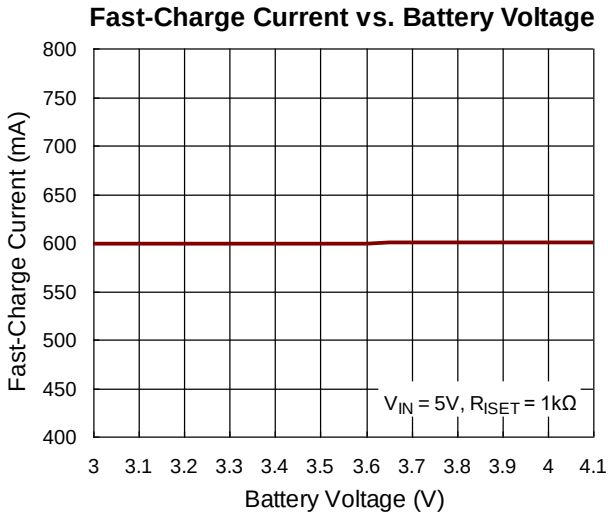

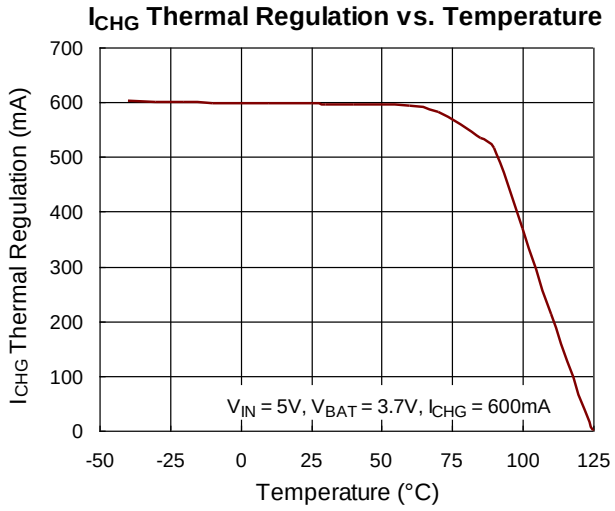

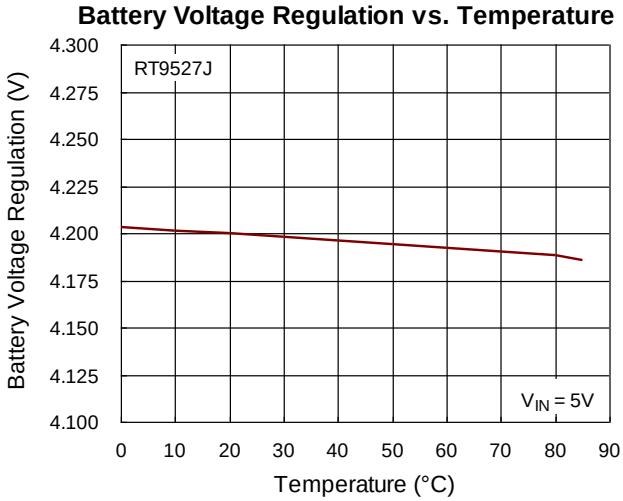

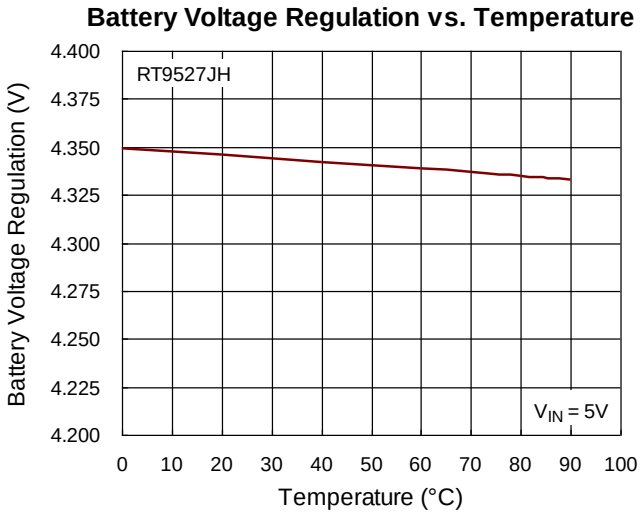

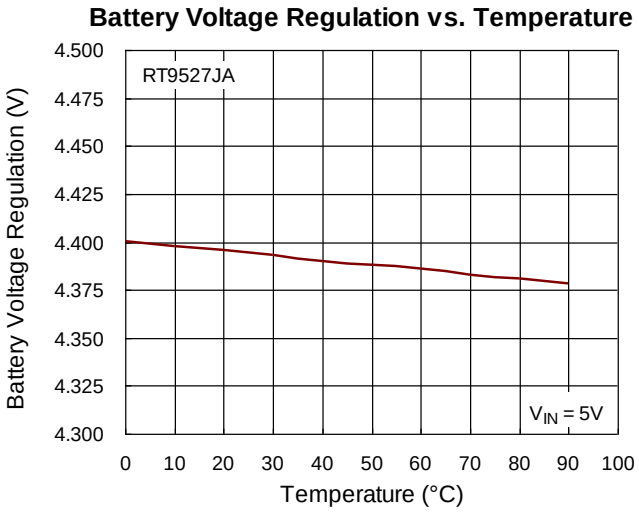

Copyright © 2024 Richtek Technology Corporation. All rights reserved. RICHTEK is a registered trademark of Richtek Technology Corporation.

15 Operation

The RT9527J/JH/JA is a Li-ion battery charger that supports an input voltage range from 4.4V to 6V. It provides a wide selection of fast-charge current options, ranging from 10mA to 600mA.

15.1 Charging Current Setting

The charging current can be adjusted via an external resistor connected between the ISET and GND pins.

15.2 UVLO

If the input voltage (VIN) drops below the undervoltage-lockout threshold ($V_{UVLO} - V_{UVLO_HYS}$), the charger will shut down. Charging will resume only when VIN rises above V_{UVLO}.

15.3 OVP

If the input voltage (VIN) exceeds the overvoltage protection threshold (V_{OVP}), the internal OVP signal is triggered, causing the charger to shut down. Charging will resume only when VIN falls below the hysteresis value, which is $V_{OVP} - V_{OVP_HYS}$.

15.4 Switch Well

The switch well is designed to select the higher voltage from either VIN or BAT to protect the power switch from damage.

15.5 Sleep Mode

If the voltage difference between VIN and BAT falls below the threshold V_{OS_F}, the charger transitions to sleep mode, thereby reducing system power consumption.

15.6 CC/CV/TR Multi-Loop Controller

The charger features a multi-loop controller with constant current (CC), constant voltage (CV), and thermal regulation (TR) loops to control the charging current.

15.7 Battery Pack Temperature Monitoring

The TS pin, designated as the temperature sense input, can be connected to a thermistor on the battery. The charging process is contingent upon the battery temperature. Should the temperature deviate from the acceptable range, charging will be suspended and will only resume once the temperature stabilizes within the permissible limits.

15.8 $\overline{\text{PGOOD}}$

The $\overline{\text{PGOOD}}$ signal is an open-drain output that indicates the status of the input voltage. It is pulled low when the VIN falls within the specified operating range.

15.9 $\overline{\text{CHG}}$

The $\overline{\text{CHG}}$ pin is an open-drain output. The $\overline{\text{CHG}}$ will assert low when the charger begins to charge the battery and will switch to high impedance when the termination current is reached.

15.10 TIMER

The charger includes a safety timer. When the charging time is longer than t_{PCHG} in the pre-charge mode or t_{FCHG} in the fast-charge mode, a timing fault occurs. The charger will then turn off and the $\overline{\text{CHG}}$ pin will become high-impedance.

Copyright © 2024 Richtek Technology Corporation. All rights reserved. RICHTEK is a registered trademark of Richtek Technology Corporation.

16 Application Information

(Note 6)

The RT9527J/JH/JA is a fully integrated, low-cost single-cell Li-ion battery charger ideal for portable applications. The internal thermal feedback circuitry regulates the die temperature to optimize the charge rate across all ambient temperatures. The RT9527J/JH/JA has a maximum VIN rating of 28V. Other features include undervoltage protection and overvoltage protection for AC adapter supply, as well as a charging time monitor.

16.1 Pre-Charge Mode

When the output voltage falls below 2.8V, the charging current reduces to 10% of the set current to optimize battery lifetime as shown below:

$I_{CHG_P} = K_{CHG_P} / R_{ISET}$

where K_{CHG_P} is the pre-charge current factor.

16.2 Fast-Charge Mode

When the output voltage exceeds 3V, the charging current will be equal to the set current which is determined by R_{ISET}.

$I_{CHG_F} = K_{CHG_Fx} / R_{ISET}$

where K_{CHG_Fx} is the fast-charge current factor.

16.3 Constant Voltage Mode

As the output voltage approaches V_{REG}, the charging current will be reduced to maintain the output voltage. The charging system continues to operate, ensuring that the battery is kept in a fully charged state by sustaining the output voltage at V_{REG}.

16.4 Recharge Mode

When the chip enters charge termination mode and the charging current falls below the threshold level, the battery voltage decreases to V_{REG} – 0.1V. After a typical deglitch delay of 100ms, the battery begins recharging. However, when recharging occurs, the $\overline{CHG}$ indicator remains in the high logic state.

16.5 $\overline{CHG}$ Indicator

The $\overline{CHG}$ pin operates as an open-drain output. It asserts low to indicate the start of battery charging and transitions to high impedance upon reaching the charge termination current. The $\overline{CHG}$ signal is compatible with both microprocessor GPIOs and LEDs for charging status indication.

Charge State	$\overline{CHG}$ Output
Charging	Low (for first charger cycle)
Charging suspended by thermal loop	
Safety timer expired	High impedance
TS fault	Low (for first charger cycle)
Charging done	High impedance
Recharging after termination	
No valid input power	

Copyright © 2024 Richtek Technology Corporation. All rights reserved. RICHTEK is a registered trademark of Richtek Technology Corporation.

16.6 $\overline{\text{PGOOD}}$ Indicator

This open-drain output pin, designated as $\overline{\text{PGOOD}}$, is used to monitor the input voltage status. The $\overline{\text{PGOOD}}$ pin goes low (asserts to a low state) under the following conditions:

1. $V_{IN} > V_{UVLO}$

2. $(V_{IN} - V_{BAT}) > V_{OS_R}$

3. $V_{IN} < V_{OVP}$

When $\overline{\text{PGOOD}}$ is low, it indicates that the open-drain transistor is conducting, which allows current to flow and can be used to illuminate an LED or to signal the host processor. It is important to note that a 'LOW' state on the $\overline{\text{PGOOD}}$ pin signifies that the conditions for a valid input voltage have been met, and the external LED, if connected, will be turned on.

16.7 Charge Termination

When the charge current falls below 10% of the full charge current (I_{CHG} / I_{CHG_F}), and V_{BAT} remains above V_{REG} – 0.1V, if this condition persists for more than 25ms (the deglitch time), $\overline{\text{CHG}}$ will transition from low to high. Once high, $\overline{\text{CHG}}$ will remain latched in this state until the power is cycled.

16.8 The ISET Pin Short Protection

After the VIN power is connected, the RT9527J/JH/JA will detect whether the ISET pin is shorted to ground. If the resistance at R_{ISET} is less than that at R_{SHORT}, the RT9527J/JH/JA will determine that the ISET pin is shorted to ground. As a result, the RT9527J/JH/JA will disable the charging function until the VIN power is cycled.

If the resistance at R_{ISET} is greater than that at R_{SHORT}, the RT9527J/JH/JA will initiate the battery charging process. Should the RT9527J/JH/JA enter the charging state and the ISET pin subsequently becomes shorted to ground, the thermal regulation feature will activate to limit the junction temperature to approximately 125°C.

16.9 Reverse Battery Protection

If the battery is connected with reverse polarity, causing the voltage at the BAT pin to be negative, the RT9527J/JH/JA will disable the charging function. The charging function will remain disabled until the battery is correctly connected and the voltage at the BAT pin returns to the normal operating range.

16.10 Temperature Regulation

To maximize charge rate, the RT9527J/JH/JA features a junction temperature regulation loop. If the IC's power dissipation causes the junction temperature to exceed the thermal regulation threshold of 125°C, the RT9527J/JH/JA will reduce the charge current and disconnect the battery to maintain thermal regulation at approximately 125°C. This operation continues until the junction temperature drops below the thermal regulation threshold (125°C) by the hysteresis level. This feature ensures that the maximum power dissipation does not exceed typical design conditions.

16.11 Sleep Mode

The RT9527J/JH/JA enters sleep mode when both the AC and USB input ports are disconnected. This feature is designed to prevent the battery from draining during periods when no input supply is available.

16.12 Battery Pack Temperature Monitoring

The RT9527J/JH/JA features an external battery pack temperature monitoring input. The TS input is connected to the NTC thermistor within the battery pack to monitor battery temperature and prevent over-temperature conditions. The device provides temperature thresholds—hot, warm, cool, and cold—to ensure battery protection. If the TS

Copyright © 2024 Richtek Technology Corporation. All rights reserved. RICHTEK is a registered trademark of Richtek Technology Corporation.

operates between the cold and cool threshold, the charging current will be reduced to 20% of I_{SET}. If the TS operates between the warm and hot thresholds, the charging current will be reduced to 50% of I_{SET} and V_{REG} will be set to 4.1V. If the TS detects a temperature within the hot or cold ranges, the device will suspend charging. The timers will maintain their values but will cease counting. When charging is suspended due to a battery pack temperature fault, the $\overline{CHG}$ pin remains low and continues to indicate that charging is in progress. For the specific equations relating to the NTC resistance at hot (R_{TH}) and cold (R_{TC}) temperatures, refer to the equation below.

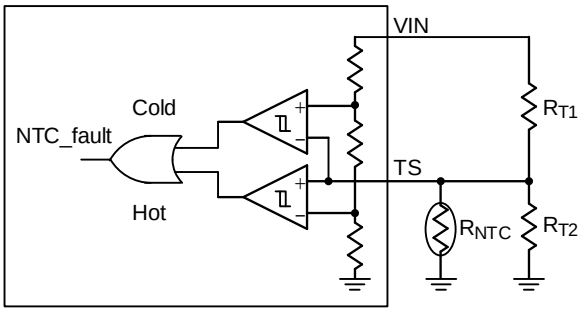

$$R_{T2} = \frac{310R_{TC}R_{TH}}{117R_{TC} - 427R_{TH}}$$

$$R_{T1} = \frac{7R_{TH}R_{T2}}{3(R_{TH} + R_{T2})}$$

16.13 Time Fault

The Fast-Charge Fault Time is set according to the following equations:

Fast-Charge Fault Time: t_{FCHG} = 14400 x C_{TIMER} (s)

Pre-Charge Fault Time: t_{PCHG} = 1 / 8 x t_{FCHG} (s)

where the C_{TIMER} unit is in μF.

When a timing fault is detected, the charging cycle is disabled, and the $\overline{CHG}$ pin switches to a high-impedance state.

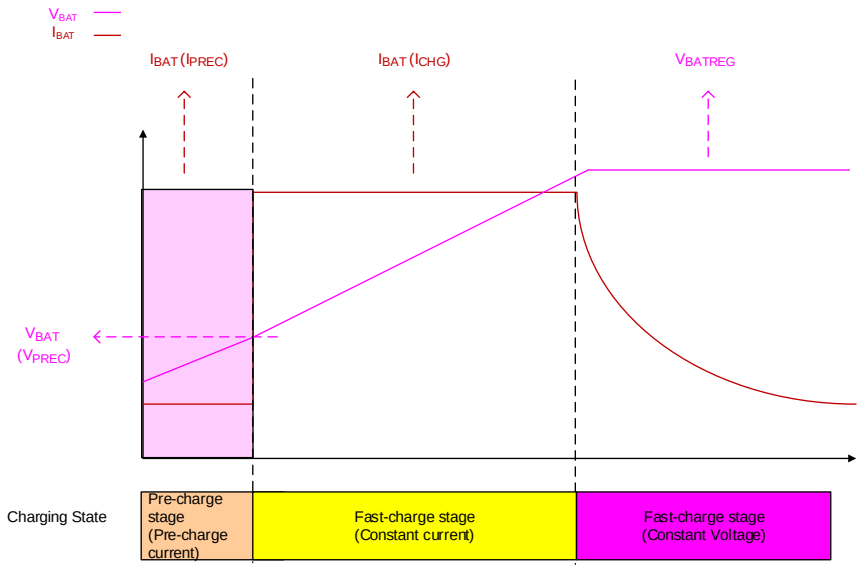

Figure 1. Charging Profile

Copyright © 2024 Richtek Technology Corporation. All rights reserved. RICHTEK is a registered trademark of Richtek Technology Corporation.

16.14 Thermal Considerations

The junction temperature should never exceed the absolute maximum junction temperature $T_{J(MAX)}$, listed under Absolute Maximum Ratings, to avoid permanent damage to the device. The maximum allowable power dissipation depends on the thermal resistance of the IC package, the PCB layout, the rate of surrounding airflow, and the difference between the junction and ambient temperatures. The maximum power dissipation can be calculated using the following formula:

$P_{D(MAX)} = (T_{J(MAX)} – T_A) / \theta_{JA}$

where $T_{J(MAX)}$ is the maximum junction temperature, T_A is the ambient temperature, and θ_{JA} is the junction-to-ambient thermal resistance.

For continuous operation, the maximum operating junction temperature indicated under Recommended Operating Conditions is 125°C. The junction-to-ambient thermal resistance, θ_{JA}, is highly package dependent. For a WDFN-8L 2x2 package, the thermal resistance, θ_{JA}, is 45.5°C/W on a standard JEDEC 51-7 high effective-thermal-conductivity four-layer test board. The maximum power dissipation at T_A = 25°C can be calculated as below:

$P_{D(MAX)}$ = (125°C – 25°C) / (45.5°C/W) = 2.19W for a WDFN-8L 2x2 package.

The maximum power dissipation depends on the operating ambient temperature for the fixed $T_{J(MAX)}$ and the thermal resistance, θ_{JA}. The derating curve in Figure 2 allows the designer to see the effect of rising ambient temperature on the maximum power dissipation.

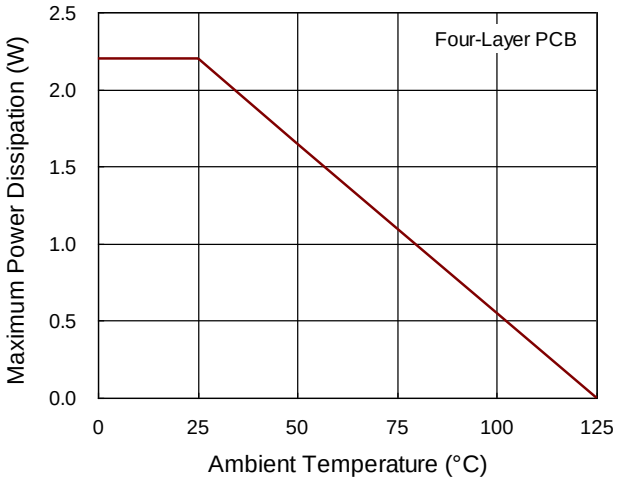

Figure 2. Derating Curve of Maximum Power Dissipation

16.15 Layout Considerations

The RT9527J/JH/JA is a fully integrated, low-cost, single-cell Li-Ion battery charger, ideal for portable applications. Careful PCB layout is crucial for optimal performance. It is highly recommended to place all peripheral components as close to the IC as possible to ensure short connections. Adhere to the following guidelines strictly when designing a PCB layout for the RT9527J/JH/JA.

- Input and output capacitors should be placed close to the IC and connected to ground plane. The trace for the input on the PCB should be kept far away from the sensitive devices and shielded by the ground.
- The GND and exposed pad should be connected to a strong ground plane for heat sinking and noise protection.
- The R_{ISET} connection should be isolated from other noisy traces. Use a short wire to prevent EMI and noise coupling.

Copyright © 2024 Richtek Technology Corporation. All rights reserved. RICHTEK is a registered trademark of Richtek Technology Corporation.

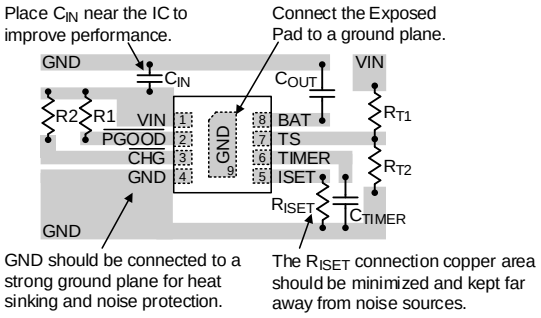

Figure 3. PCB Layout Guide

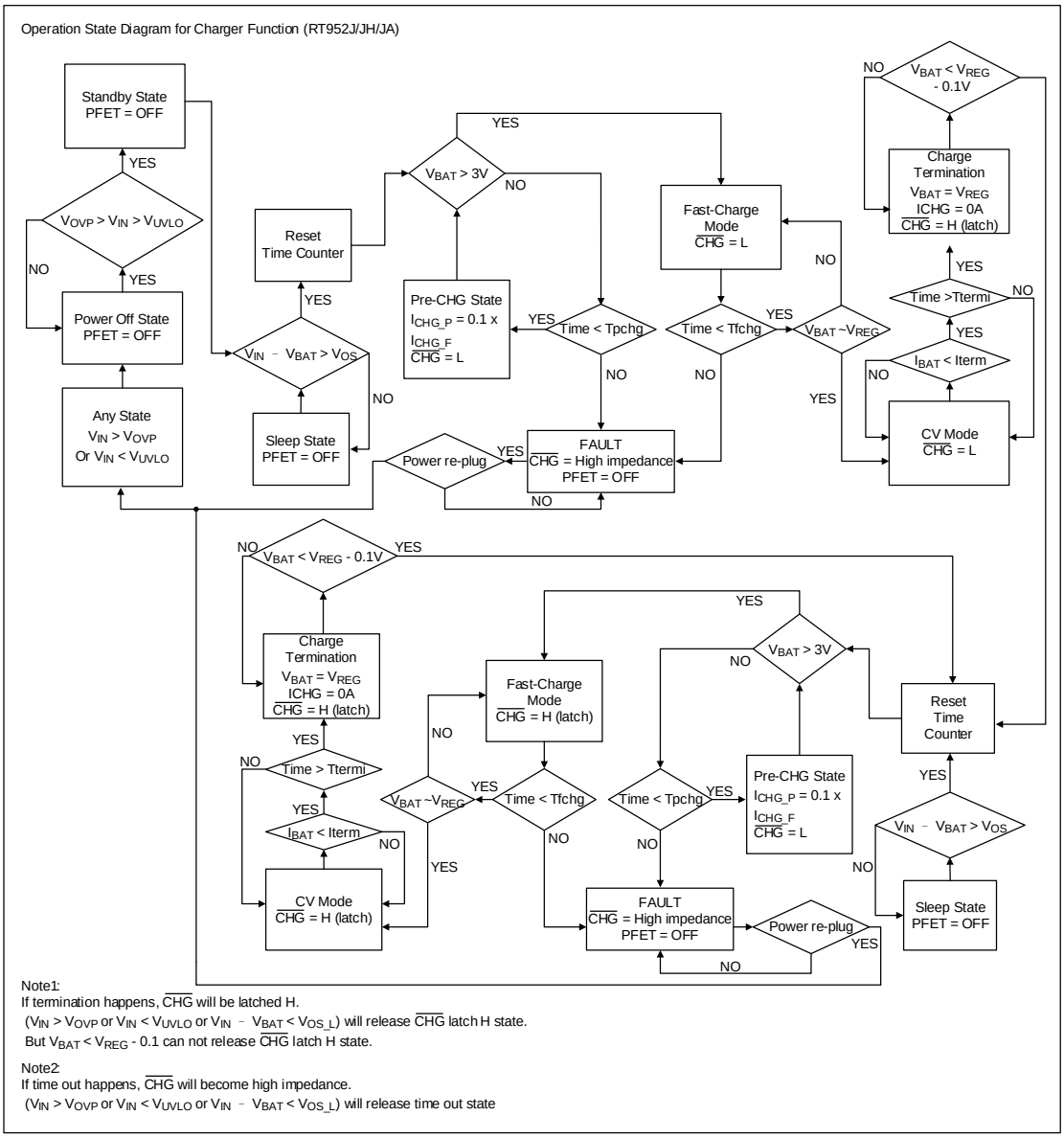

Figure 4. Operation State Diagram for Charging

Note 6. The information provided in this section is for reference only. The customer is solely responsible for designing, validating, and testing any applications incorporating Richtek's product(s). The customer is also responsible for applicable standards and any safety, security, or other requirements.

Copyright © 2024 Richtek Technology Corporation. All rights reserved. RICHTEK is a registered trademark of Richtek Technology Corporation.

17 Outline Dimension

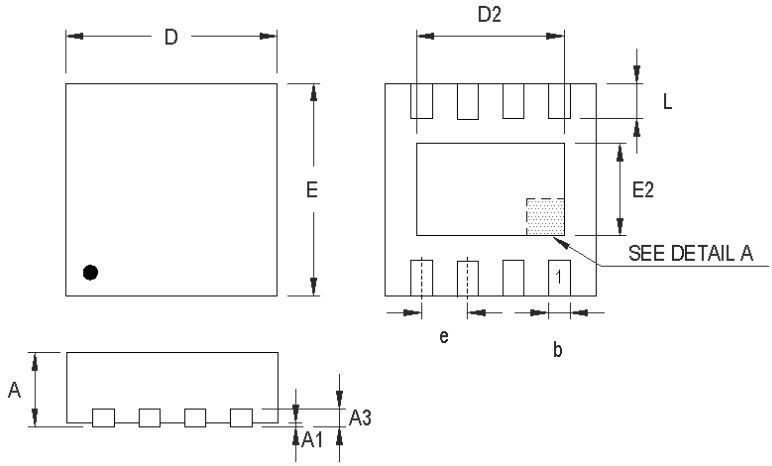

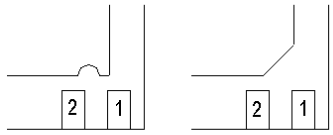

DETAIL A

Pin #1 ID and Tie Bar Mark Options

Note : The configuration of the Pin #1 identifier is optional, but must be located within the zone indicated.

Symbol	Dimensions In Millimeters		Dimensions In Inches	
	Min	Max	Min	Max
A	0.700	0.800	0.028	0.031
A1	0.000	0.050	0.000	0.002
A3	0.175	0.250	0.007	0.010
b	0.200	0.300	0.008	0.012
D	1.950	2.050	0.077	0.081
D2	1.000	1.250	0.039	0.049
E	1.950	2.050	0.077	0.081
E2	0.400	0.650	0.016	0.026
e	0.500		0.020	
L	0.300	0.400	0.012	0.016

W-Type 8L DFN 2x2 Package

Copyright © 2024 Richtek Technology Corporation. All rights reserved. RICHTEK is a registered trademark of Richtek Technology Corporation.

18 Footprint Information

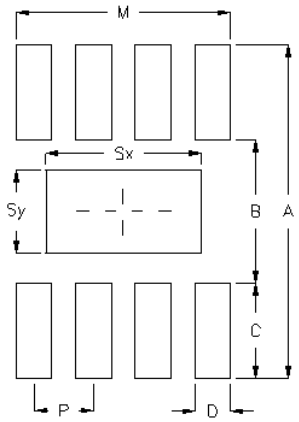

Package	Number of Pin	Footprint Dimension (mm)								Tolerance
		P	A	B	C	D	Sx	Sy	M	
V/W/U/XDFN2*2-8	8	0.50	2.80	1.20	0.80	0.30	1.30	0.70	1.80	±0.05

Copyright © 2024 Richtek Technology Corporation. All rights reserved. RICHTEK is a registered trademark of Richtek Technology Corporation.

19 Packing Information

19.1 Tape and Reel Data

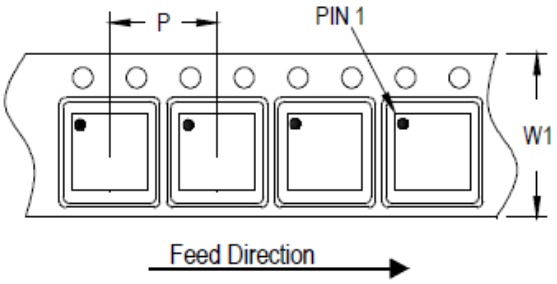

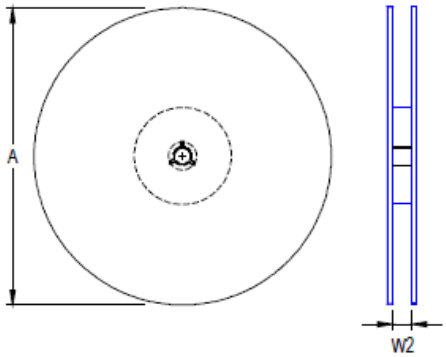

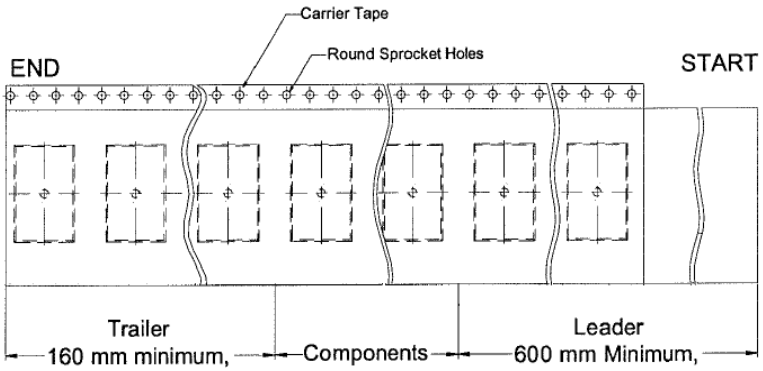

Package Type	Tape Size (W1) (mm)	Pocket Pitch (P) (mm)	Reel Size (A)		Units per Reel	Trailer (mm)	Leader (mm)	Reel Width (W2) Min./Max. (mm)
			(mm)	(in)				
(V, W) QFN/DFN 2x2	8	4	180	7	3,000	160	600	8.4/9.9

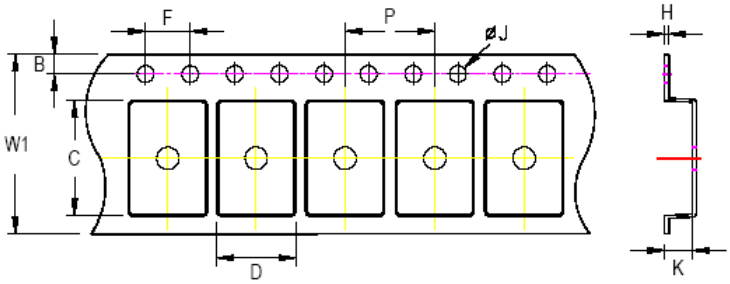

C, D, and K are determined by component size. The clearance between the components and the cavity is as follows:

- For 12mm carrier tape: 0.5mm max.

Tape Size	W1	P		B		F		ØJ		K		H
	Max.	Min.	Max.	Min.	Max.	Min.	Max.	Min.	Max.	Min.	Max.	Max.
8mm	8.3mm	3.9mm	4.1mm	1.65mm	1.85mm	3.9mm	4.1mm	1.5mm	1.6mm	1.0mm	1.3mm	0.6mm

Copyright © 2024 Richtek Technology Corporation. All rights reserved. RICHTEK is a registered trademark of Richtek Technology Corporation.

19.2 Tape and Reel Packing

Step	Photo/Description	Step	Photo/Description
1	Reel 7”	4	3 reels per inner box **Box A**
2	HIC & Desiccant (1 Unit) inside	5	12 inner boxes per outer box
3	Caution label is on backside of Al bag	6	Outer box **Carton A**

Container / Package	Reel		Box			Carton		
	Size	Units	Item	Reels	Units	Item	Boxes	Unit
(V, W) QFN & DFN 2x2	7”	3,000	Box A	3	9,000	Carton A	12	108,000
			Box E	1	3,000	For Combined or Partial Reel.		

Copyright © 2024 Richtek Technology Corporation. All rights reserved. RICHTEK is a registered trademark of Richtek Technology Corporation.

19.3 Packing Material Anti-ESD Property

Surface Resistance	Aluminum Bag	Reel	Cover tape	Carrier tape	Tube	Protection Band
Ω/cm^2	**10^4 to 10^{11}**	**10^4 to 10^{11}**	**10^4 to 10^{11}**	**10^4 to 10^{11}**	**10^4 to 10^{11}**	**10^4 to 10^{11}**

Richtek Technology Corporation
14F, No. 8, Tai Yuen 1st Street, Chupei City
Hsinchu, Taiwan, R.O.C.
Tel: (8863)5526789

RICHTEK
Richtek products are sold by description only. Richtek reserves the right to change the circuitry and/or specifications without notice at any time. Customers should obtain the latest relevant information and data sheets before placing orders and should verify that such information is current and complete. Richtek cannot assume responsibility for use of any circuitry other than circuitry entirely embodied in a Richtek product. Information furnished by Richtek is believed to be accurate and reliable. However, no responsibility is assumed by Richtek or its subsidiaries for its use; nor for any infringements of patents or other rights of third parties which may result from its use. No license is granted by implication or otherwise under any patent or patent rights of Richtek or its subsidiaries.

Copyright © 2024 Richtek Technology Corporation. All rights reserved. RICHTEK is a registered trademark of Richtek Technology Corporation.

20 Datasheet Revision History

Version	Date	Description	Item
00	2022/12/13	Final	Marking Information on P2 Packing Information on P17, 18
01	2023/2/1	Modify	Electrical Characteristics on P5, 6 Application Information on P11, 14
02	2023/4/11	Modify	Electrical Characteristics on P6, 7 Packing Information on P18, 19
03	2023/10/5	Modify	General Description on P1 Ordering Information on P2 Electrical Characteristics on P5 Application Information on P11
04	2024/6/7	Modify	Ordering Information on P2 Electrical Characteristics on P5, 6, 7 Application Information on P16 Packing Information on P20
05	2024/11/5	Modify	*Electrical Characteristics on page 6* - Update EOC spec from 9%~11% to 5% ~15% *Packing Information on page19, 20* - Updated packing information

Copyright © 2024 Richtek Technology Corporation. All rights reserved. RICHTEK is a registered trademark of Richtek Technology Corporation.