Low current consumption /
Small size, low profile model package
I²C-Bus INTERFACE REAL TIME CLOCK MODULE

RX - 8564 LC

- Built in frequency adjusted 32.768 kHz crystal unit.
- Interface Type : I²C-Bus Interface (400 kHz)
- Operating voltage range : 1.8 V to 5.5 V
- Wide Timekeeper voltage range : 1.0 V to 5.5 V / Ta = +25 °C
- Low backup current : 275 nA / 3.0 V(Typ.)
- 32.768 kHz frequency output function: C-MOS output With Control Pin
- The various functions include full calendar, alarm, timer, and power supply voltage monitoring function.

* The I²C-Bus is a trademark of Philips Electronics N.V.

Actual size

Block diagram

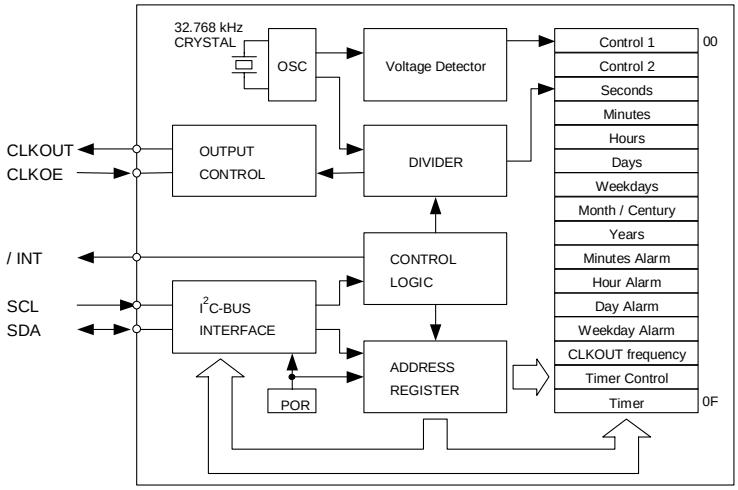

Overview

- **Interface Type**
  - I²C hi-speed bus specifications. (400 kHz)
  - * I²C-Bus slave address : read A3h and write A2h
- **Low Timekeeper voltage**
  - 1.0 V to 5.5 V / Ta = +25 °C
  - 1.3 V to 5.5 V / Ta = –40 °C to +85 °C
- **32.768 kHz frequency output function**
  - CLKOUT pin output (C-MOS output), CL=30 pF
  - CLKOE pin enables output on/off control.
  - Output selectable <32.768 kHz, 1024 Hz, 32 Hz, 1 Hz>
- **The various interrupt function**
  - Timer function can be set up between 1/4096 second and 255 minutes.
  - Alarm function can be set to any combination of day of week, hour, or minute.

* Functions are compatible with RTC-8564 JE / NB series.

Pin Function

Signal Name	Input / Output	Function
SCL	Input	Serial clock input pin
SDA	Bi-directional	Data input and output pin
CLKOUT	Output	32.768 kHz clock output pin with the output control function. (C-MOS) CLKOE pin control the condition of CLKOUT pin with FE-bit, FD1-bit, FD0-bit.
CLKOE	Input	
/INT	Output	Interrupt output (N-ch open drain)
VDD	—	Connected to a positive power supply.
GND	—	Connected to a ground.

CLKOE pin input	FE bit	CLKOUT pin output	
HIGH	1	Output	(C-MOS)
	0	OFF	(LOW)
LOW	1	OFF	(LOW)
	0	OFF	(LOW)

Terminal connection / External dimensions (Unit:mm)

RX – 8564 LC

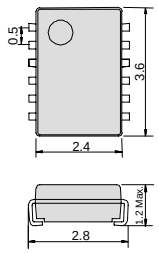

1. N.C.
2. N.C.
3. N.C.
4. N.C.
5. / INT
6. GND
12. N.C.
11. CLKOE
10. VDD
9. CLKOUT
8. SCL
7. SDA

VSOJ – 12pin

Specifications (characteristics)

* Refer to application manual for details.

Recommended Operating Conditions

Item	Symbol	Condition	Min.	Typ.	Max.	Unit
Power voltage	VDD	—	1.8	3.0	5.5	V
Clock voltage	VCLK	—	VLOW	3.0	5.5	V
Operating temperature	TOPR	—	-40	+25	+85	°C

Low voltage detection

Item	Symbol	Condition	Min.	Typ.	Max.	Unit
Low voltage detection	VLOW	Ta = +25°C		0.9	1.0	V
		Ta = -20 °C to +70 °C		0.9	1.2	V
		Ta = -40 °C to +85 °C		0.9	1.3	V

Frequency characteristics

Item	Symbol	Condition	Rating	Unit
Frequency tolerance	Δf / f	Ta = +25 °C VDD = 3.0 V	5 ± 23 *	× 10⁻⁶

* Please ask for tighter tolerance. (Equivalent to 1 minute of monthly deviation)

DC characteristics

Ta = -40 °C to +85 °C

Item	Symbol	Condition		Min.	Typ.	Max.	Unit
Current Consumption	IBK	fSCL = 0 Hz CLKOE = GND CLKOUT ; output OFF (LOW)	VDD = 5 V		330	800	nA
			VDD = 3 V		275	700	
	I32k	fSCL = 0 Hz CLKOE = VDD CLKOUT ; 32.768 kHz Output ON (Output=OPEN ; CL = 0 pF)	VDD = 5 V		2.5	3.4	μA
			VDD = 3 V		1.5	2.2	