www.DataSheet4U.com



# 5ϕ Round Infrared LED

## SID300/1003 Series

### External Dimensions

(Unit: mm)

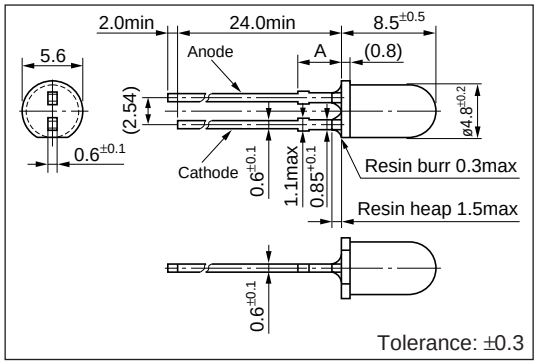


### Directivity (Typical)

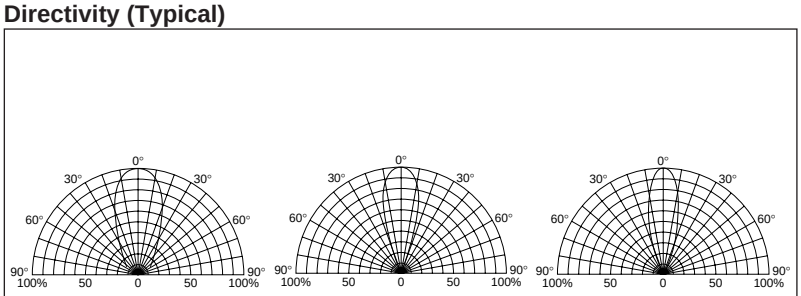


### Absolute maximum ratings (Ta=25°C)

| Symbol | Unit | Rating | Condition |
|---|---|---|---|
| $I_F$ | mA | 150 | |
| $\Delta I_F$ | mA/°C | –1.33 | Above 25°C |
| $I_{FP}$ | mA | 1000 | f=1kHz, tw≤10μs |
| $V_R$ | V | 5 | |
| Top | °C | –30 to +85 | |
| Tstg | °C | –30 to +100 | |

### Electrical Optical characteristics (Ta=25°C)

| Part Number | Lens color | Forward voltage $V_F$ (V) typ | Forward voltage $V_F$ (V) max | Condition $I_F$ (mA) | Reverse current $I_R$ (μA) max | Condition $V_R$ (V) | Optical Power $I_e$ (mW/sr) typ | Condition | Peak wavelength λP (nm) typ | Condition $I_F$ (mA) | Spectrum half width Δλ (nm) typ | Condition $I_F$ (mA) | Chip material | Dimension A (mm) |
|---|---|---|---|---|---|---|---|---|---|---|---|---|---|---|
| SID303C | Clear | 1.3 | 1.5 | 50 | 10 | 5 | 80 | (Constant | 940 | 50 | 50 | 50 | GaAs | $3.0^{\pm0.5}$ |
| SID313BP | Transparent light purple | 1.3 | 1.5 | 50 | 10 | 5 | 130 | voltage) | 940 | 50 | 50 | 50 | | $3.6^{\pm0.5}$ |
| SID1003BQ | Transparent light navy blue | 1.3 | 1.5 | 50 | 10 | 5 | 180 | $V_{CC}$=3V | 940 | 50 | 50 | 50 | | |
| SID307BR | Transparent dark navy blue | 1.3 | 1.5 | 50 | 10 | 5 | 200 | R=2.2Ω | 940 | 50 | 50 | 50 | | $4.2^{\pm0.5}$ |
| SID1G307C | Clear | 1.5 | 1.8 | 50 | 10 | 5 | 50 | $I_F$=50mA | 850 | 50 | 40 | 50 | | |