ORDER NO. MB9401044C2

Service Manual

Compact Disc Player

Compact Disc Player

SL-PG360A

COMPACT disc DIGITAL AUDIO

DIGITAL

MASH multi-stage noise shaping

Colour

(K) . . . . Black Type

Area

Suffix for Model No.	Area	Colour
(E)	Europe	(K)
(EB)	Great Britain	
(EG)	Germany and Italy	

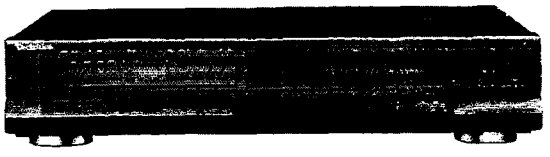

New Traverse Deck (RAE1100Z) Specifications

■ Audio

No. of channels	2 (left and right, stereo)
Frequency response	2–20,000 Hz, ±0.5 dB
Output voltage	2 V (at 0 dB)
Dynamic range	96 dB
S/N	100 dB
Harmonic distortion	0.0035% (1 kHz, 0 dB)
Total harmonic distortion	0.004% (1 kHz, 0 dB)
Wow and flutter	Below measurable limit
DA converter	MASH (1 bit)
Output impedance	600Ω
Load impedance	More than 10 kΩ

■ Pickup

Wavelength	780 nm
Laser Power	No hazardous radiation is emitted (with safety protection)

■ General

Power consumption	13 W
Power supply	AC 50/60 Hz, 230–240 V
Dimensions (W×H×D)	430×92×283 mm
Weight	3.3 kg

Note:
Specifications are subject to change without notice.
Weight and dimensions are approximate.

For United Kingdom only:
This apparatus was produced to BS 800.

- Technics (or Panasonic) developed the world's first MASH type DAC and ADC. MASH technology was invented by NTT (LSI Labs).
- MASH is a trademark of NTT.

Technics

■Contents

	Page
●Handling Precautions for Traverse Deck	2
●Precaution of Laser Diode	2, 3
●Accessories	3
●Connections	3
●Caution for AC Mains Lead (For United Kingdom)	4
●Location of Controls	5
●Basic Operating Procedure	6
●Disassembly Instructions	7~12
●Installing Disc Tray	13
●How to Check the Main P.C.B.	14
●How to Check the Servo P.C.B.	14
●Block Diagram	15, 16
●Schematic Diagram	17~22
●Printed Circuit Board Diagram	23~25
●Wiring Connection Diagram	26
●Display Function of Automatically-Adjusted Results	27
●Digital Servo System	28
●Troubleshooting Guide	29, 30
●Functions of IC Terminals	31~33
●Replacement Parts List	34~40
●Cabinet Parts Location	37
●Loading Unit Parts Location	39
●Packaging	40

■Handling Precautions for Traverse Deck

The laser diode in the traverse deck (optical pickup) may break down due to potential difference caused by static electricity of clothes or human body.
So, be careful of electrostatic breakdown during repair of the traverse deck (optical pickup).

●Handling of traverse deck (optical pickup)

1. Do not subject the traverse deck (optical pickup) to static electricity as it is extremely sensitive to electrical shock.
2. To prevent the breakdown of the laser diode, an anti-static shorting pin is inserted into the flexible board (FPC board). *When removing or connecting the short pin, finish the job in as short time as possible.*
3. Take care not to apply excessive stress to the flexible board (FPC board).
4. Do not turn the variable resistor (laser power adjustment). It has already been adjusted.

●Grounding for electrostatic breakdown prevention

1. Human body grounding
   Use the anti-static wrist strap to discharge the static electricity from your body.
2. Work table grounding
   Put a conductive material (sheet) or steel sheet on the area where the traverse deck (optical pickup) is placed, and ground the sheet.

Caution:
The static electricity of your clothes will not be grounded through the wrist strap. So, take care not to let your clothes touch the traverse deck (optical pickup).

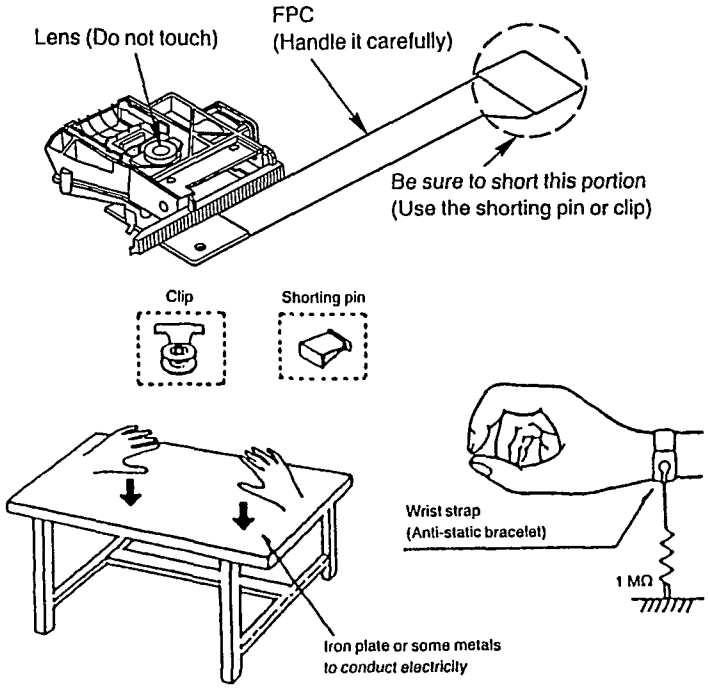

■Precaution of Laser Diode

CAUTION: This product utilizes a laser diode with the unit turned "on", invisible laser radiation is emitted from the pick up lens.
Wave length: 780 nm
Maximum output radiation power from pick up: 100 μW/VDE

Laser radiation from the pick up unit is safety level, but be sure the followings:

1. Do not disassemble the optical pick up unit, since radiation from exposed laser diode is dangerous.
2. Do not adjust the variable resistor on the pickup unit. It was already adjusted.
3. Do not lock at the focus lens using optical instruments.
4. Recommend not to lock at pick up lens for a long time.

ACHTUNG: Dieses produkt enthält eine laserdiode. Im eingeschalteten zustand wird unsichtbare laserstrahlung von der lasereinheit abgestrahit.

Wellenlänge: 780 nm
Maximale strahlungsleistung der laserinheit: 100 μW/VDE

Die strahlung an der lasereinheit ist ungefährlich, wenn folgende punkte beachtet werden:

1. Die lasereinheit nicht zerlegen, da die strahlung an der freigelegten laserdiode gefähriich ist.
2. Den werksseitig justierten einstellregler der lasereinreit nicht verstellen.
3. Nicht mit optischen instrumenten in die fokussierlinse blicken.
4. Nicht über längere zeit in die fokussierlinse blicken.

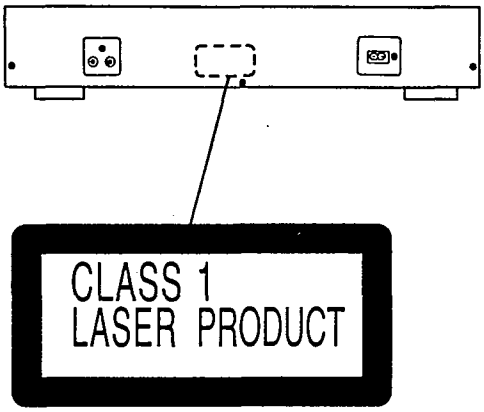

LUOKAN 1 LASERLAITE
KLASS 1 LASER APPARAT

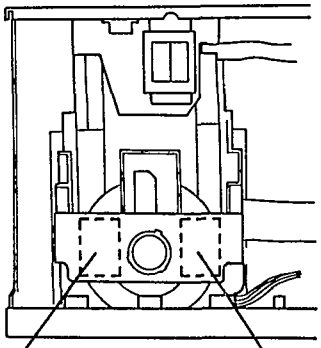

VARO! Avattaessa ja suojalukitus ohitettaessa olet alttiina näkymätön lasersäteilylle. Älä katso säteeseen.

ADVERSEL! Usynlig laserstråling når dekset åpnes og sikkerhedslås brytes. Unngå eksponering for strålen.

VARNING! Osynlig laserstrålning när denna del är öppnad och spärren är urkopplad. Betrakta ej strålen.

VORSICHT - Unsichtbare Laserstrahlung, wenn Abdeckung geöffnet. Nicht dem Strahl aussetzen.

ADVARSEL: USYNLIG LASERSTRÅLING VED ÅBNING, NÅR SIKKERHEDSAF-BRYDERE ER UDE AF FUNKTION. UNDGÅ UDSÆTTELSE FOR STRÅLING.

DANGER-invisible laser radiation when open. AVOID DIRECT EXPOSURE TO BEAM.

■Accessories

☐ AC mains lead ..... 1 pc.
(For United Kingdom: RJA0034-P) (For others: RJA0043-C)

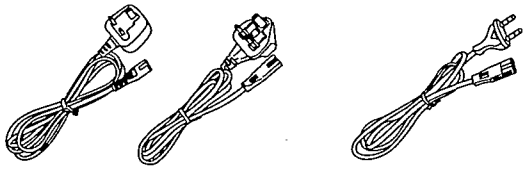

☐ Stereo connection cable ..... 1 pc.
(SJP2249-3)

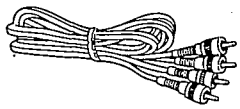

■Connections

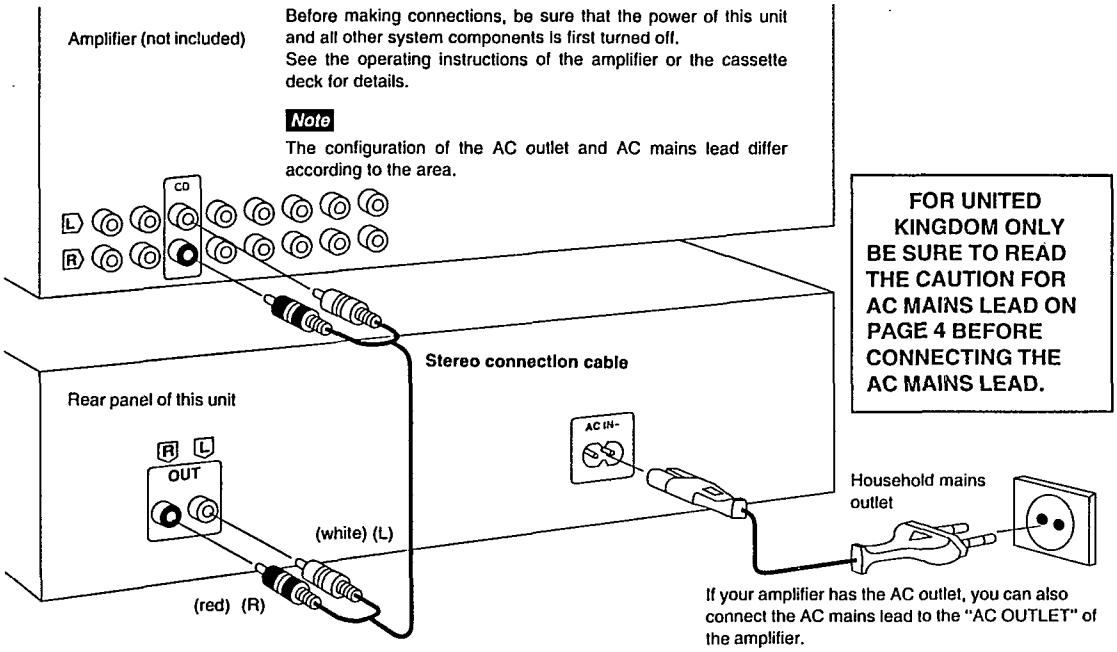

■Caution for AC Mains Lead (For United Kingdom)

("EB" area code model only)

For your safety, please read the following text carefully.

This appliance is supplied with a moulded three pin mains plug for your safety and convenience.
A 5-ampere fuse is fitted in this plug.
Should the fuse need to be replaced please ensure that the replacement fuse has a rating of 5-ampere and that it is approved by ASTA or BSI to BS1362.
Check for the ASTA mark ⟐ or the BSI mark ♡ on the body of the fuse.

If the plug contains a removable fuse cover you must ensure that it is refitted when the fuse is replaced.
If you lose the fuse cover the plug must not be used until a replacement cover is obtained.
A replacement fuse cover can be purchased from your local dealer.

CAUTION!
IF THE FITTED MOULDED PLUG IS UNSUITABLE FOR THE SOCKET OUTLET IN YOUR HOME THEN THE FUSE SHOULD BE REMOVED AND THE PLUG CUT OFF AND DISPOSED OF SAFELY.
THERE IS A DANGER OF SEVERE ELECTRICAL SHOCK IF THE CUT OFF PLUG IS INSERTED INTO ANY 13-AMPERE SOCKET.

If a new plug is to be fitted please observe the wiring code as shown below.
If in any doubt please consult a qualified electrician.

IMPORTANT

If the socket outlets in the home are not suitable for the plug supplied with this appliance it should be cut off and an appropriate three pin plug fitted.
The wires in this mains lead are coloured in accordance with the following code:

Blue: Neutral
Brown: Live

Do not connect either wire to the earth terminal in the plug which is marked by the letter "E" or by the safety earth symbol ⏚ or coloured green or green-and-yellow.
As the colours of the wires in the mains lead of this apparatus may not correspond with the coloured markings identifying the terminals in your plug proceed as follows. The wire which is coloured BLUE must be connected to the terminal which is marked with the letter N or coloured BLACK.

The wire which is coloured BROWN must be connected to the terminal which is marked with the letter L or coloured RED.

Before use

Remove the connector cover as follows.

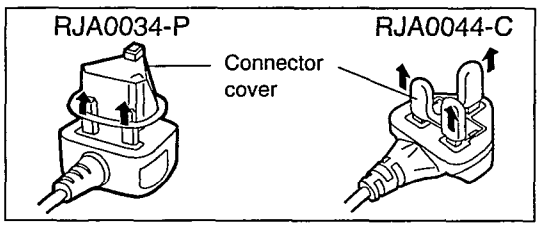

How to replace the fuse

1. Open the fuse cover with a screwdriver.

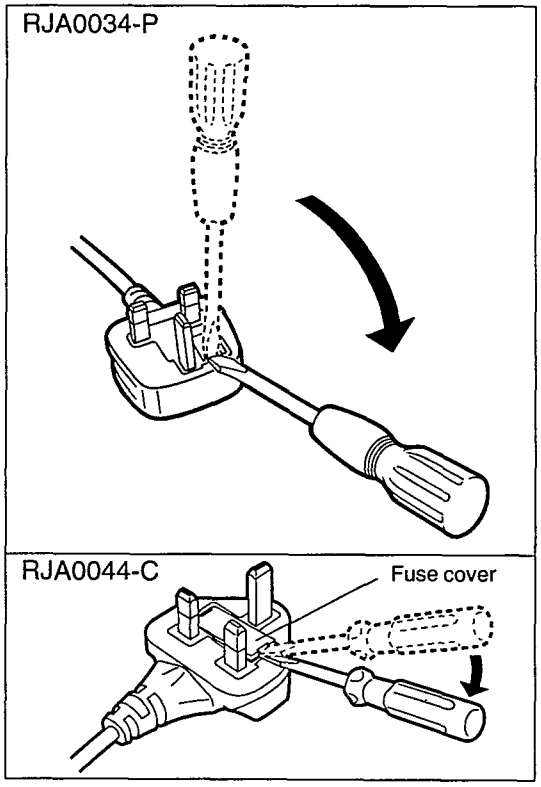

2. Replace the fuse and close or attach the fuse cover.

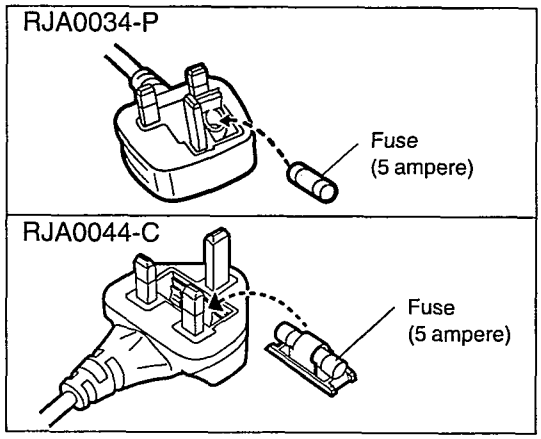

■Location of Controls

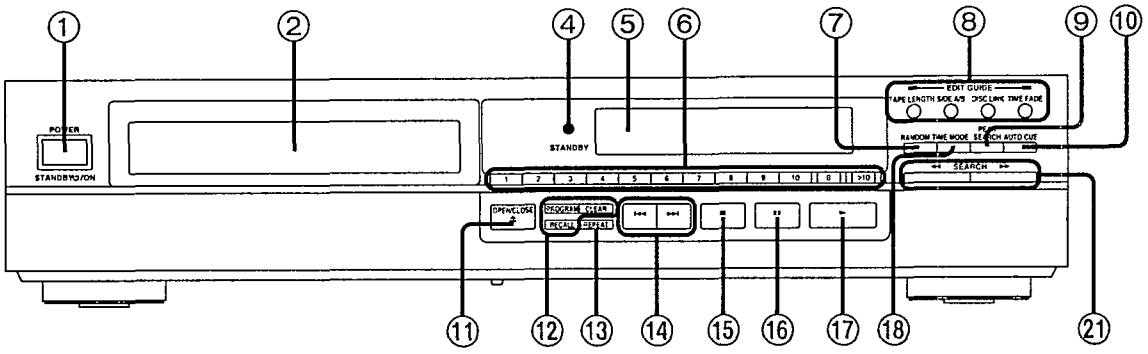

No.	*Name*
①	**Power "STANDBY ⏻/ON" switch (POWER, STANDBY ⏻/ON)** Press to switch the unit from on to standby mode or vice versa. In standby mode, the unit is still consuming a small amount of power.
②	**Disc tray**
④	**Standby indicator (STANDBY)** When the unit is connected to the AC mains supply, this indicator lights up in standby mode and goes out when the unit is turned on.
⑤	**Display panel**
⑥	**Numeric buttons (1–10, 0, >10)**
⑦	**Random play button (RANDOM)**
⑧	**CD edit record buttons (EDIT GUIDE)**
	•Tape length button (TAPE LENGTH)
	•Tape side switch button (SIDE A/B)
	•Disc link button (DISC LINK)
	•Time fade button (TIME FADE)
⑨	**Peak search button (PEAK SEARCH)**
⑩	**Auto cue button (AUTO CUE)**

No.	*Name*
⑪	**Disc tray open/close button (⏏ OPEN/CLOSE)**
⑫	**Program play buttons**
	•Program button (PROGRAM)
	•Clear button (CLEAR)
	•Recall button (RECALL)
⑬	**Repeat button (REPEAT)**
⑭	**Skip buttons (⏮, ⏭)**
⑮	**Stop button (■)**
⑯	**Pause button (❚❚)**
⑰	**Play button (▶)**
⑱	**Time mode select button (TIME MODE)**
㉑	**Search buttons (◀◀ SEARCH ▶▶)**

■Basic Oprating Procedure

With this function, a disc is played from the first track to the last track and then stops automatically.

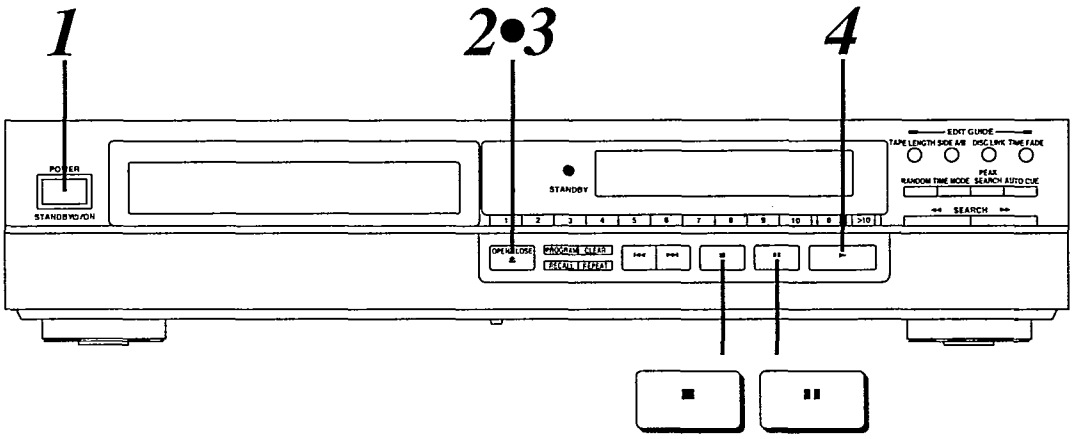

1 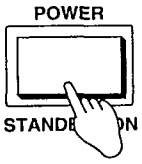

Press POWER (Power goes on).

If a compact disc is already in the disc tray, it automatically begins playing from the first track.

2

Press ▲ OPEN/CLOSE to open the tray and insert a disc.

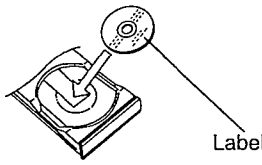

Label must face upward

3

Press ▲ OPEN/CLOSE to close the tray.

Total number of tracks

Total playing time

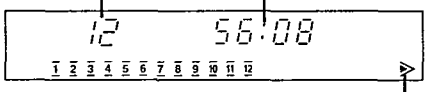

Displayed if there are 21 or more tracks on the disc

On SL-PG360A, this indicator appears when there are 17 or more tracks on the disc.

4 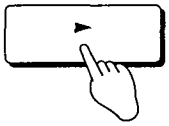

Press ▶ (Play begins).

Play stops automatically after all tracks have been played.

Index number
(If there is none, " / " is displayed.)

Track currently playing

Elapsed time

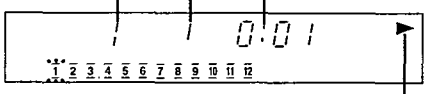

Illuminates.

■ To stop disc play

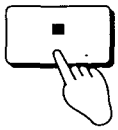

Press ■.

■ To pause disc play

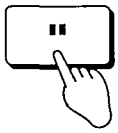

Press ❚❚.

To continue playback, press ▶.

Notes

- The displayed total playing time includes the time between tracks. For this reason, the time may be several seconds longer than that which appears on song cards and the like.
- When you use the timer with other unit, be sure to turn this unit on.

For your reference:

If you skip step 3 and press ▶, the tray automatically closes and play begins from the first track.

■Disassembly Instructions

Warning: This product uses a laser diode. Refer to caution statements on page 2.
ACHTUNG: Die lasereinheit nicht zerlegen.
Die lasereinheit dart nur gegen eine vom hersteller speziferte einheit ausgetauscht werden.
"ATTENTION SERVICER" Some chassis components may have sharp edges. Be careful when disassembling and servicing.

Ref. No. 1	Removal of the cabinet
Procedure 1	

(4 screws) ❶~❹ (Black)
(1 screw) ❺ Tapping screw 3 × 8 (Black)

Step 1
Remove the 5 screws.

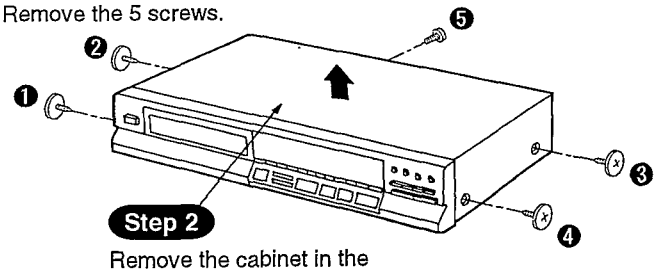

Step 2
Remove the cabinet in the direction of arrow.

Ref. No. 2	Removal of the front panel ass'y
Procedure 1→2	

(2 screws) Tapping screw 3 × 8 (Black)

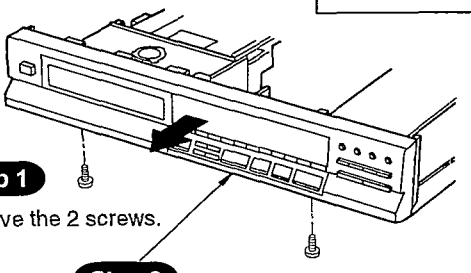

Step 1
Remove the 2 screws.

Step 2
Remove the front panel ass'y in the direction of arrow.

Ref. No. 3	Removal of the main P.C.B.
Procedure 1→2→3	

Step 1
Remove the flat cable from connector (CN11).

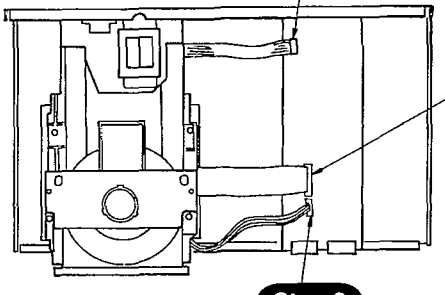

Step 2
Pull out the flexible cable from connector (CN401).

Step 3
Remove the connector (CN402).

(2 screws) ❶, ❷ Tapping screw 3 × 20 (Black)
(1 screw) ❸ Tapping screw 3 × 8 (Black)

Step 4
Remove the 3 screws.

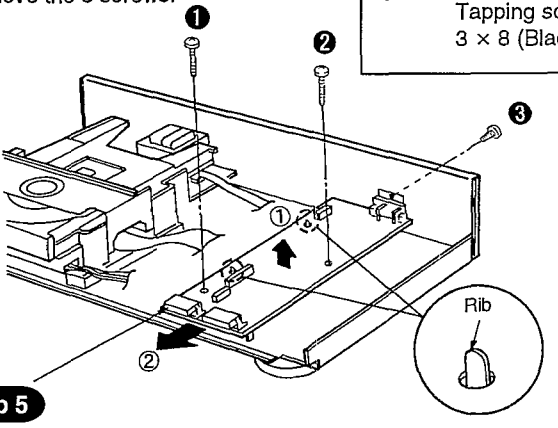

Step 5
Lift up the main P.C.B. in the direction of arrow ①, and release the 2 ribs on the chassis ass'y. Then, remove the main P.C.B. in the direction of arrow ②.

Ref. No. 4	Removal of the power switch P.C.B.
Procedure 1→2→4	

(2 screws) Tapping screw 2.6 × 8

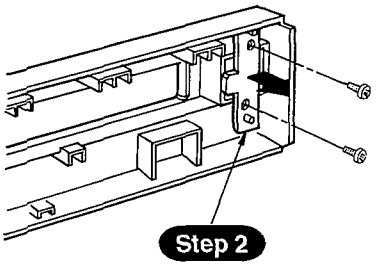

Step 1
Remove the 2 screws.

Step 2
Remove the power switch P.C.B. in the direction of arrow.

Ref. No. 5	Removal of the operation P.C.B.
Procedure 1→2→5	

(8 screws) Tapping screw 2.6 × 8

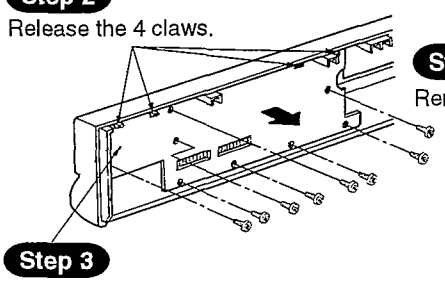

Step 2 Release the 4 claws.

Step 1 Remove the 8 screws.

Step 3 Remove the operation P.C.B. in the direction of arrow.

Ref. No. 6	Removal of the clamper plate and clamper ass'y
Procedure 1→6	

(2 screws) Tapping screw 3 × 8 (Black)

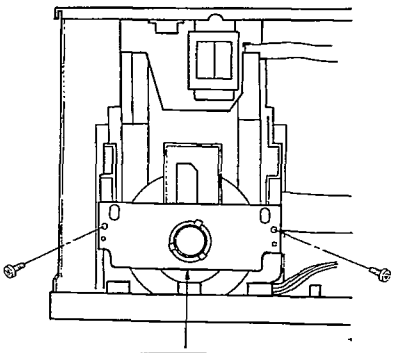

Step 1 Remove the 2 screws.

Step 2 Remove the clamper plate.

Step 3 Release the 3 claws in the direction of arrow.

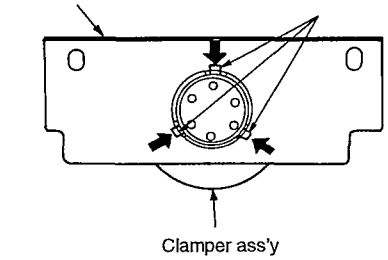

Ref. No. 7	Removal of the loading unit
Procedure 1→2→7	

(4 screws) Tapping screw 3 × 8 (Black)

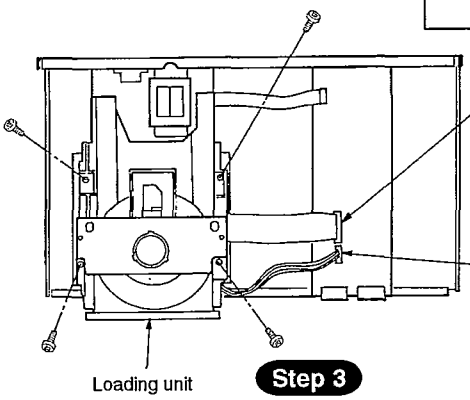

Step 1 Pull out the flexible cable from connector (CN401).

Step 2 Remove the connector (CN402).

Step 3 Remove the 4 screws.

Ref. No. 8	Removal of the power supply P.C.B.
Procedure 1→2→7→8	

(1 screw)❶ Tapping screw 3 × 8 (Black)
(3 screws)❷~❹ Tapping screw 3 × 20 (Black)

Step 1 Remove the 4 screws.

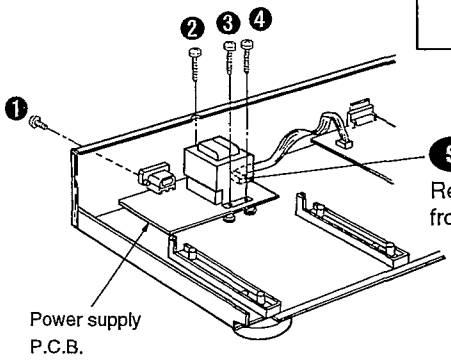

Step 2 Remove the flat cable from connector (CN21).

Ref. No. 9	Removal of the spacer
Procedure 1→2→7→9	

(4 screws) Tapping screw 3 × 8 (Black)

Step 1 Remove the 4 screws.

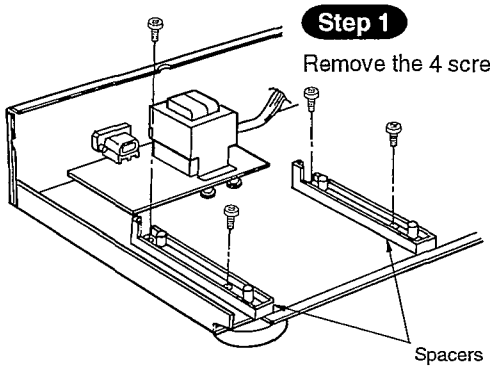

Ref. No. 10	Removal of the foots
Procedure 1→2→7→9→10	

(4 screws) Tapping screw 3 × 8 (Black)

Step 1
Remove the 4 screws.

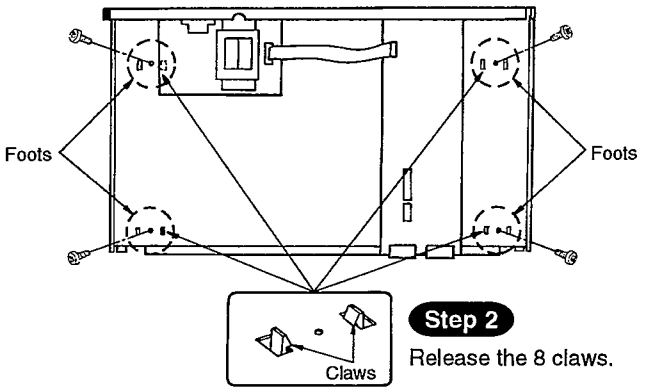

Step 2
Release the 8 claws.

Ref. No. 11	Removal of the disc tray
Procedure 1→2→6→7→11	

Step 1
Push the 2 levels fully in the direction of the arrows ①.
(Traverse unit in moved down.)

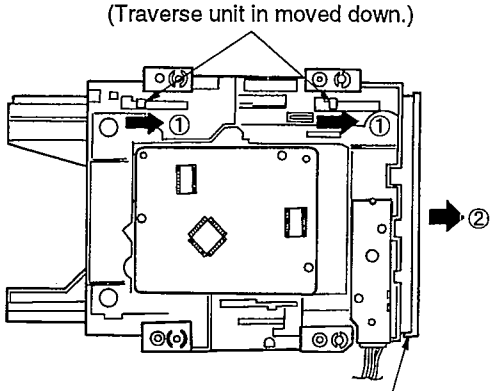

Step 2
Move the disc tray slightly in the direction of arrow ②.

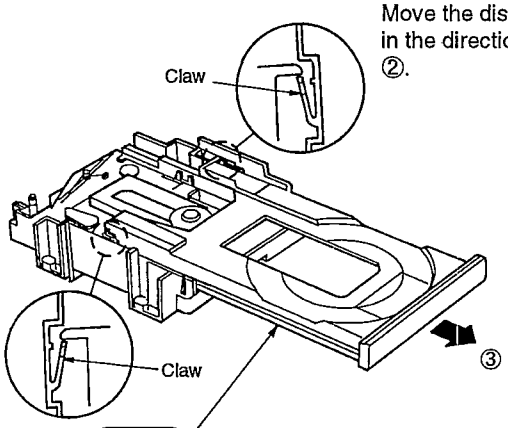

Step 3
Release the 2 claws, and then move the disc tray in the direction of arrow ③.

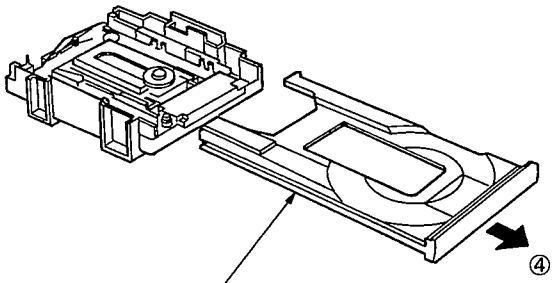

Step 4
Remove the disc tray in the direction of arrow ④.

Ref. No. 12	Removal of the servo P.C.B.
Procedure 1→2→7→12	

(3 screws) Tapping screw 2.6 × 8

Step 1
Remove the 3 screws.

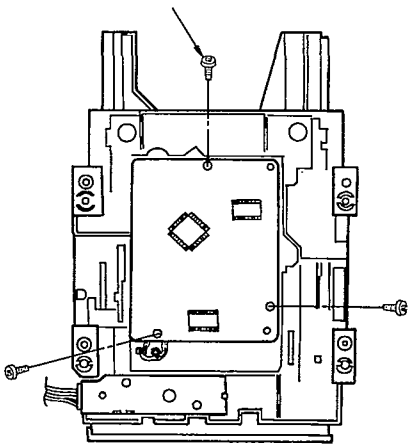

■Removal of the flexible cable
- Push the top of the connector in the direction of arrow ①, and then pull out the flexible cable in the direction of arrow ②.

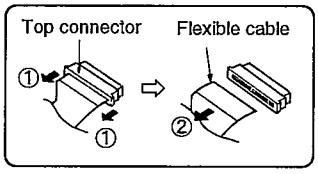

Step 2
Remove the connector (CN703).

Step 3
Remove the flexible cable from connector (CN701).

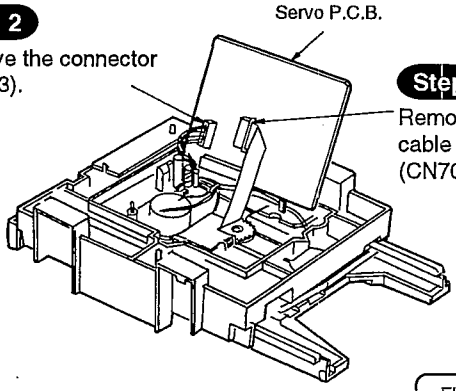

Note:
Insert a shorting pin into the traverse unit flexible cable. (Refer to Handling Precautions for Traverse Deck on page 2.)

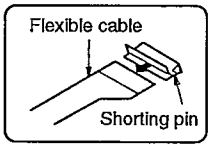

Ref. No. 13	Removal of the converter lever and traverse deck ass'y
Procedure 1→2→6→7→11→12→13	

Note:
Be careful not to damage the claw (A) or (B) because the claw (A) or (B) is breakable.

Step 1
Remove the spring.

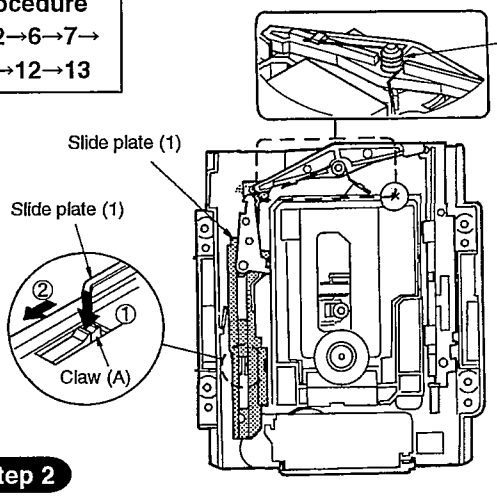

Step 2
Push the claw (A) in the direction of arrow ①, and then move the slide plate (1) in the direction of arrow ②.

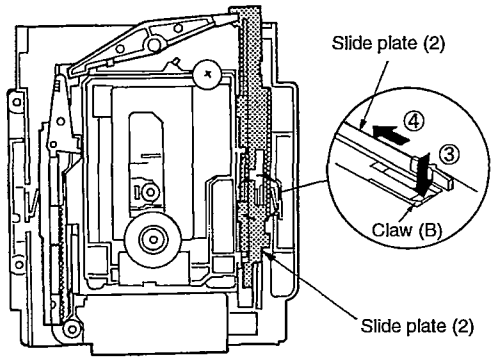

Step 3
Push the claw (B) in the direction of arrow ③, and then move the slide plate (2) in the direction of arrow ④.

Step 4
Remove the converter lever in the direction of arrow ⑤.

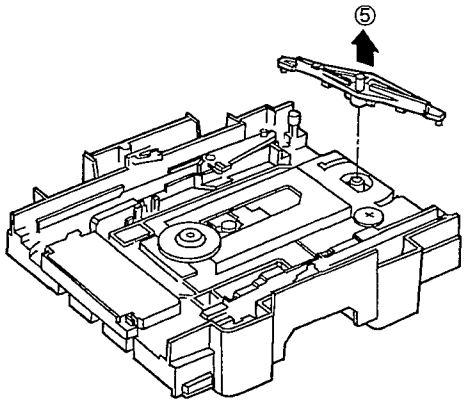

Step 5
Remove the traverse deck ass'y in the direction of arrow ⑥.

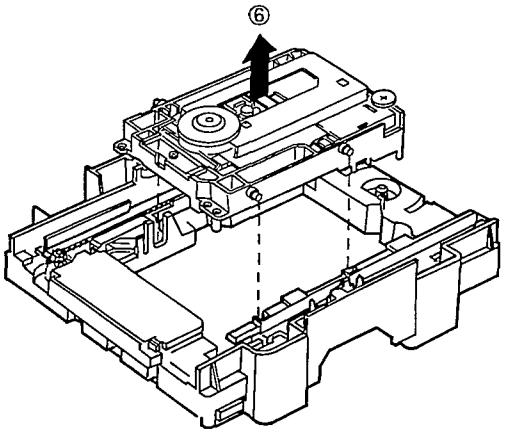

Ref. No. 14	Removal of the lock lever
Procedure 1→2→6→7→11→14	

Step 1
Remove the spring.

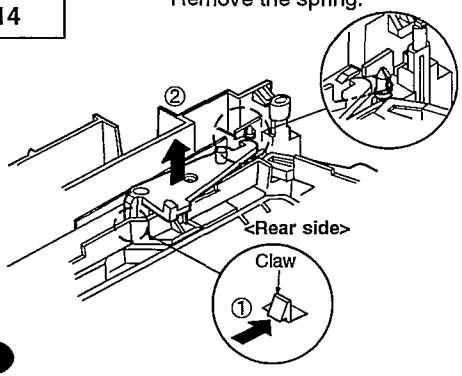

Step 2
Push the claw in the direction of arrow① and then lift up the lock lever in the direction of arrow②.

Ref. No. 15	Removal of the gear cover
Procedure 1→2→6→7→11→15	

Step 1
Release the 2 claws in the direction of arrow ①.

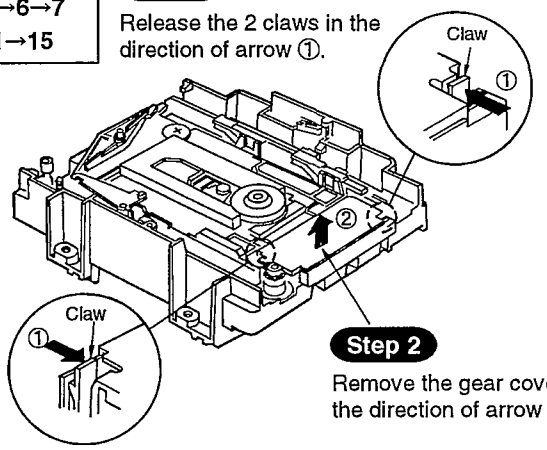

Step 2
Remove the gear cover in the direction of arrow ②.

Ref. No. 16	Removal of the loading motor P.C.B. and loading motor ass'y
Procedure 1→2→6→7→11→15→16	

Step 1
Remove the 2 screws.

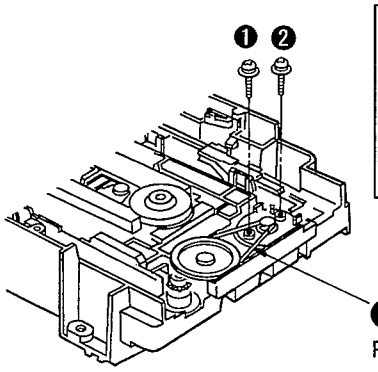

(2 screws)❶,❷ Tapping screw 2 × 6 (Black)
(1 screw)❸ Tapping screw 2.6 × 8

Step 2
Remove the belt.

Step 3
Remove the 1 screw.

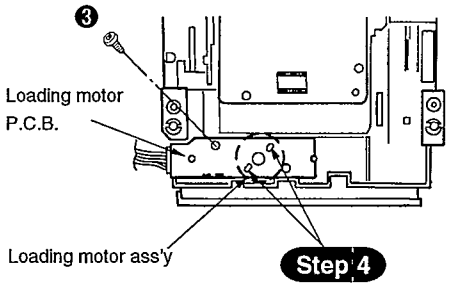

Step 4
Unsolder the loading motor ass'y terminals (2 points).

Polarity of loading motor ass'y terminals

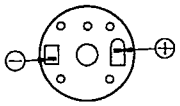

Ref. No. 17	Removal of the slide plate (1)
Procedure 1→2→6→7→11→12→13→14→17	

Step 1
Move the slide plate (1) in the direction of arrow ①, and lift up the slide plate (1) in the direction of arrow②.

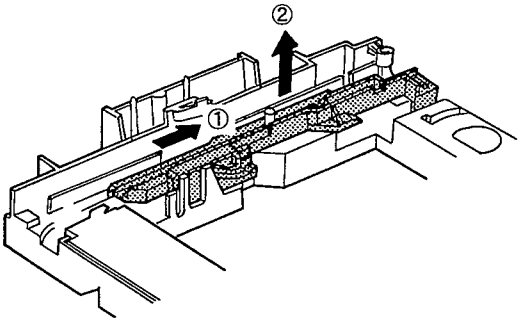

Ref. No. 18	Removal of the slide plate (2)
Procedure 1→2→6→7→11→12→13→18	

Step 1
Move the slide plate (2) in the direction of arrow ①, and lift up the slide plate (2) in the direction of arrow②.

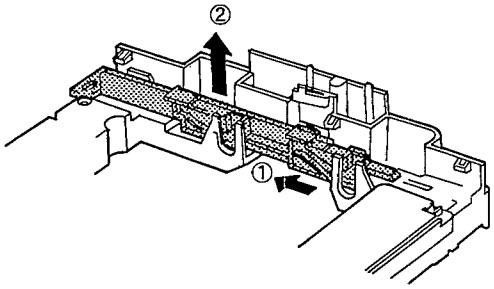

Ref. No. 19	Removal of the disc tray ornament
Procedure 1→2→7→19	

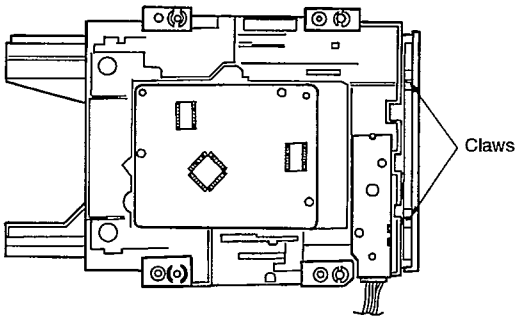

Step 1
Release the 2 claws, and then remove the disc tray ornament in the direction of arrow.

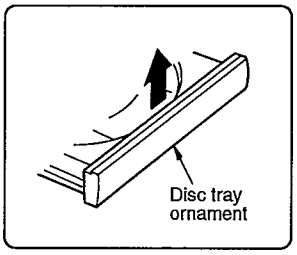

Ref. No. 20	Removal of the traverse deck
Procedure 1→2→6→7→11→12→13→20	

Step 1
Remove the 2 screws.

Step 2
Remove the traverse stopper

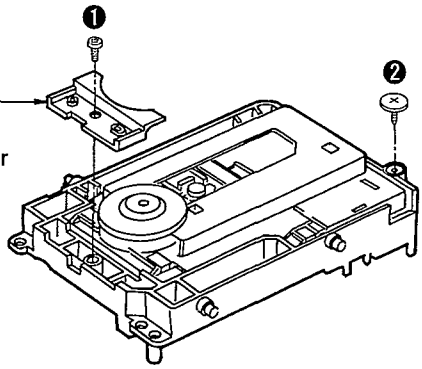

Step 3
Remove the lead wire from clamper.

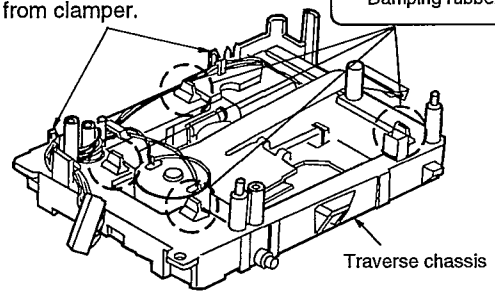

Step 4
Push the damping rubber in the direction of arrow ①, and then remove it from traverse chassis.

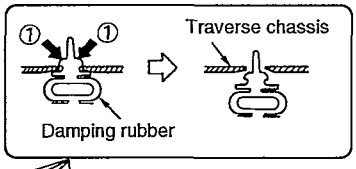

Ref. No. 21	Removal of the drive rack
Procedure 1→2→6→7→11→21	

(1 screw) ❶ Tapping screw 2.6 × 8 (Black)
(1 screw) ❷ Tapping screw 3 × 8

(1 screw) Tapping screw 2 × 5 (Black)

Step 1 Remove the 1 screw.

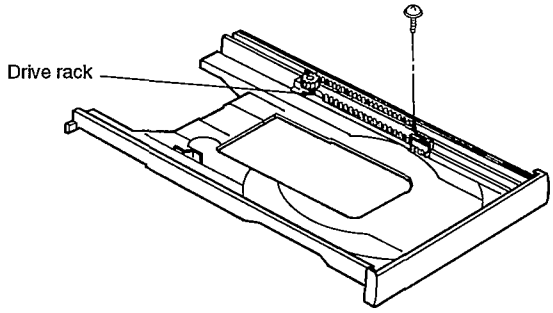

Step 5
Remove the traverse deck in the direction of arrow②.

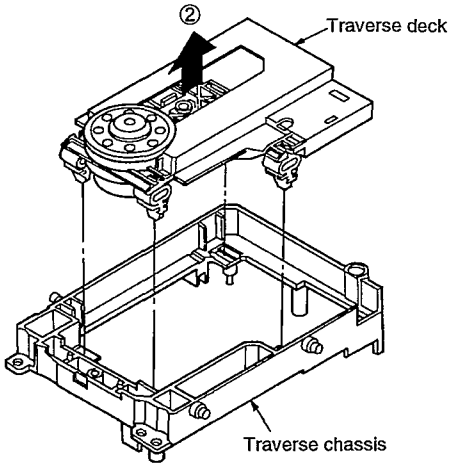

■Installing Disc Tray

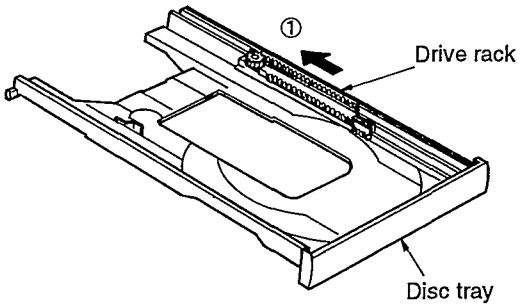

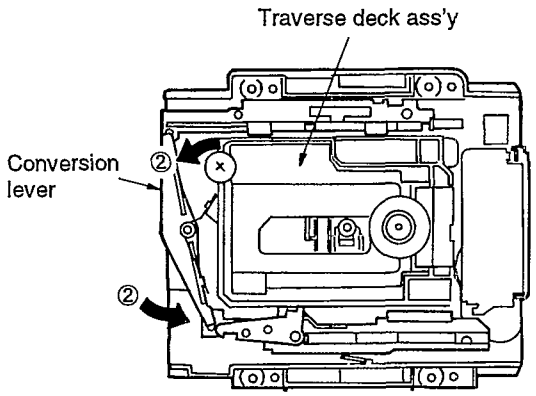

Step 1
Slide the drive rack fully in the direction of arrow ①.

Step 2
Slide the conversion lever in the direction of arrow ②, and then leave the traverse deck ass'y falling.

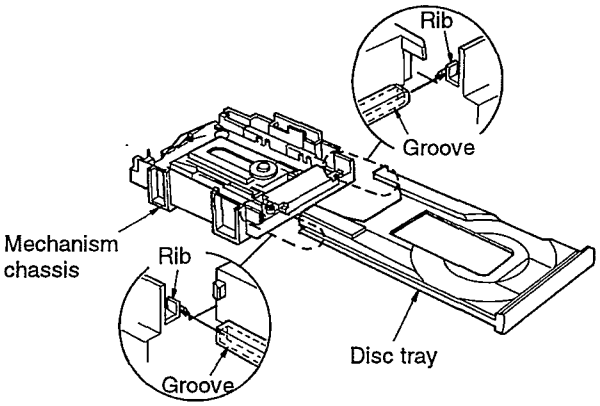

Step 3
Align the disc tray grove with the mechanism chassis rib.

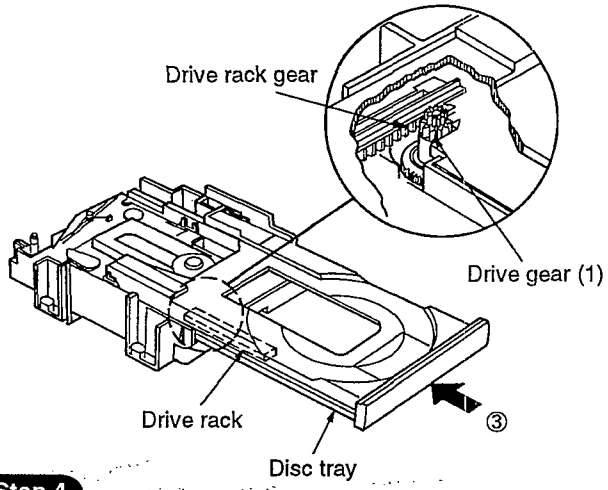

Step 4
Slide the disc tray in the direction of arrow ③. Then, put the drive rack manually so that the drive gear (1) engages with the drive rack gear.

Step 5
After the drive gear (1) engaged with the drive rack gear, slide the disc tray in the direction of arrow ③.

■Dispose of Wire

1. Dispose of wire in due order ⓐ to ⓕ.
2. Slacken off the each wire between solder part and each claw.

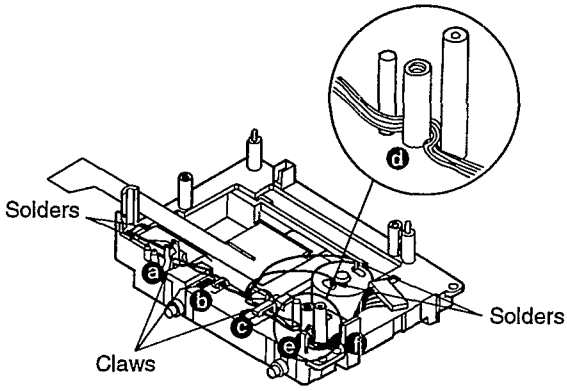

■How to Check the Main P.C.B.

1. Remove the cabinet referring to Procedure 1 "Removal of the cabinet" on page 7.
2. Remove the front panel ass'y referring to Procedure 2 "Removal of the front panel ass'y" on page 7.
3. Remove the operation P.C.B. referring to Procedure 5 "Removal of the operation P.C.B." on page 8.

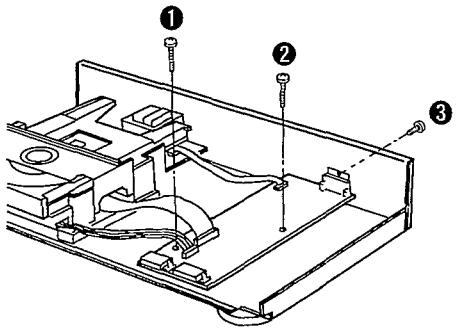

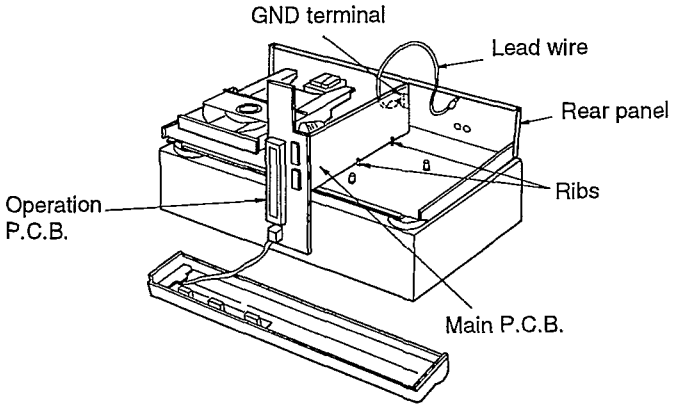

4. Remove the 3 screws (❶~❸).
5. Remove the main P.C.B. and then stand the main P.C.B. at the side of unit.
6. Reinstall the operation P.C.B. to the main P.C.B.
7. Connect the GND terminal to the rear panel by the lead wire.
8. When checking the soldered surface of the main P.C.B., do as shown above.

■How to Check the Servo P.C.B.

1. Remove the cabinet referring to Procedure 1 "Removal of the cabinet" on page 7.

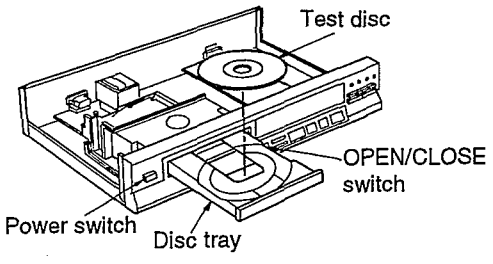

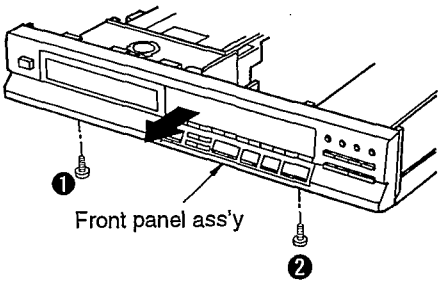

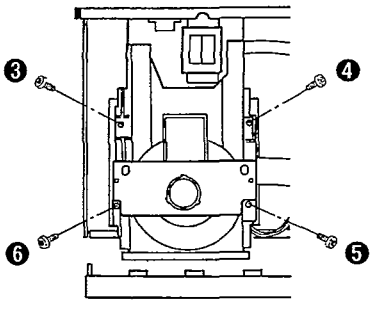

2. Turn on the power and press the OPEN/CLOSE switch to open the disc tray.
3. Load the test disc and press the OPEN/CLOSE switch again to close the disc tray.
4. Turn the power switch "OFF".
5. Remove the 2 screws (❶,❷).
6. Draw the front panel ass'y in the direction of arrow.
7. Remove the 4 screws (❸~❻).

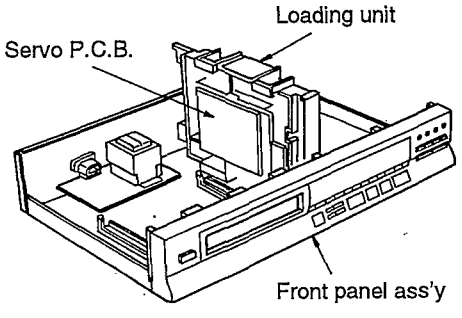

8. Place the loading unit sideways as shown in the figure left.
9. Attach the front panel ass'y to the unit.
10. After placing the unit as shown left, perform check and adjustment of the foil on the servo P.C.B.

■Block Diagram

Note: ⟶ AUDIO SIGNAL

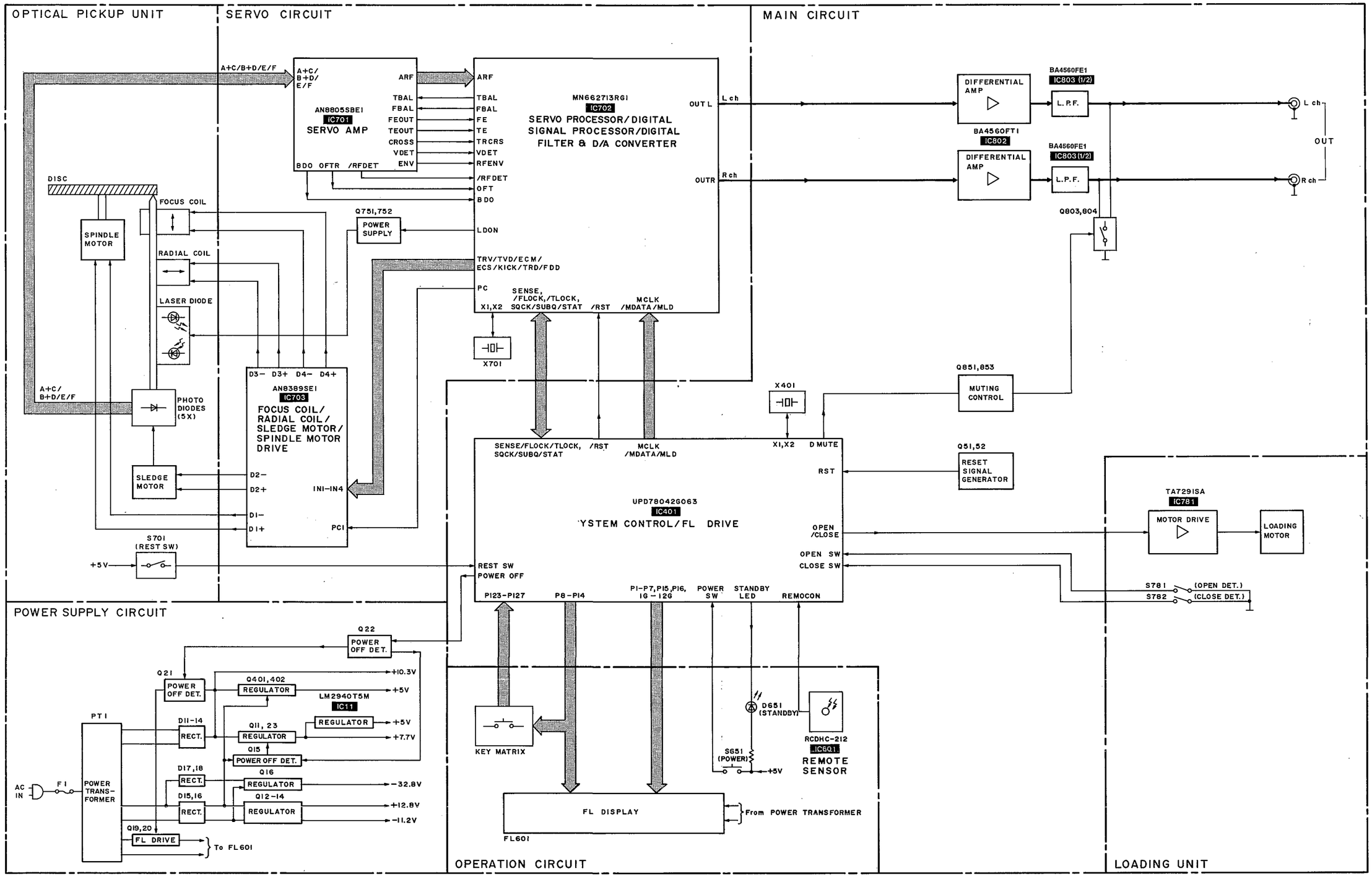

■Schematic Diagram ●Optical Pickup/Servo Circuit (Parts list on pages 34~36.)

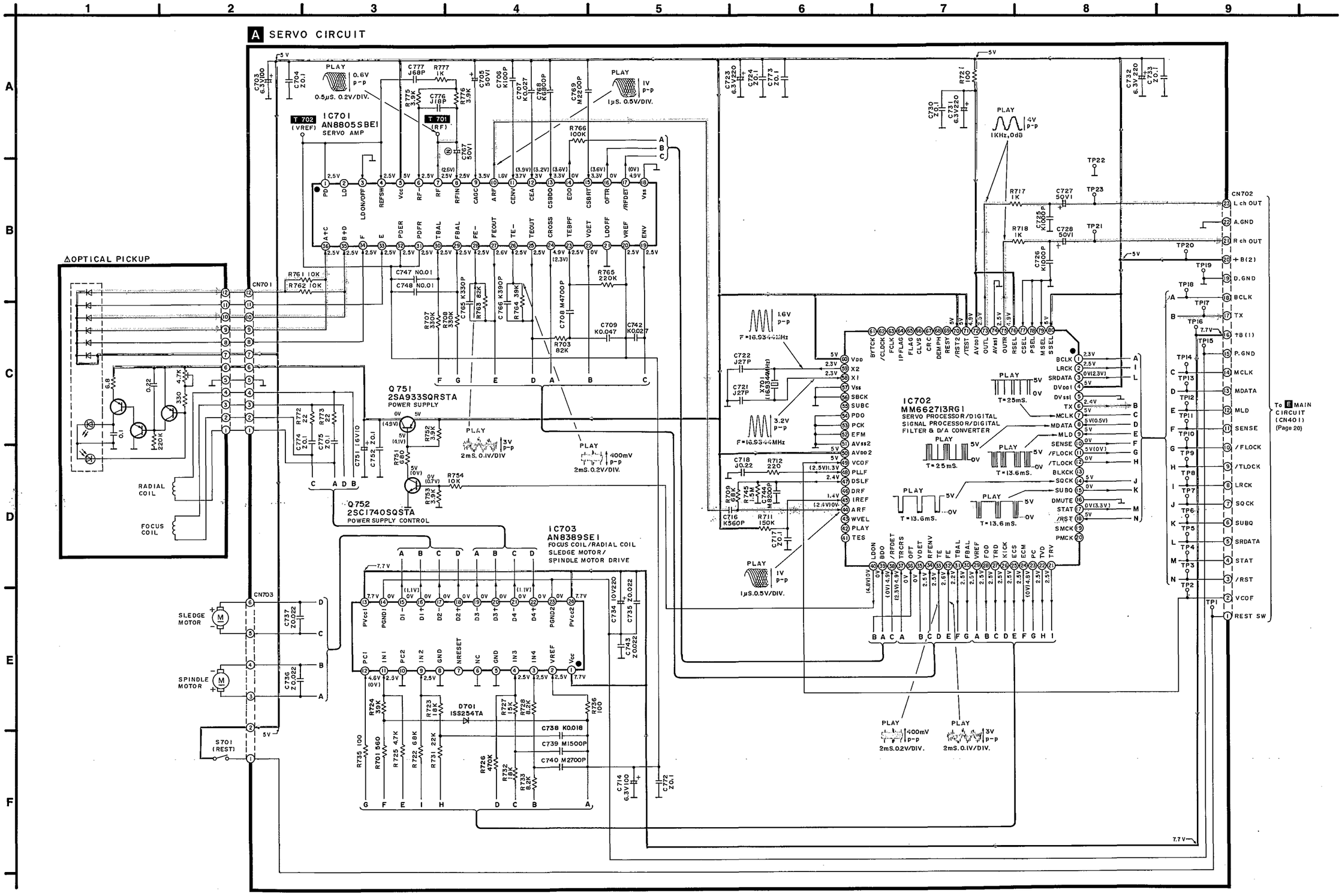

SL-PG360A SL-PG360A

●Main/Operation/Loading Motor/Power Supply Circuit (Parts list on page 34~36.)

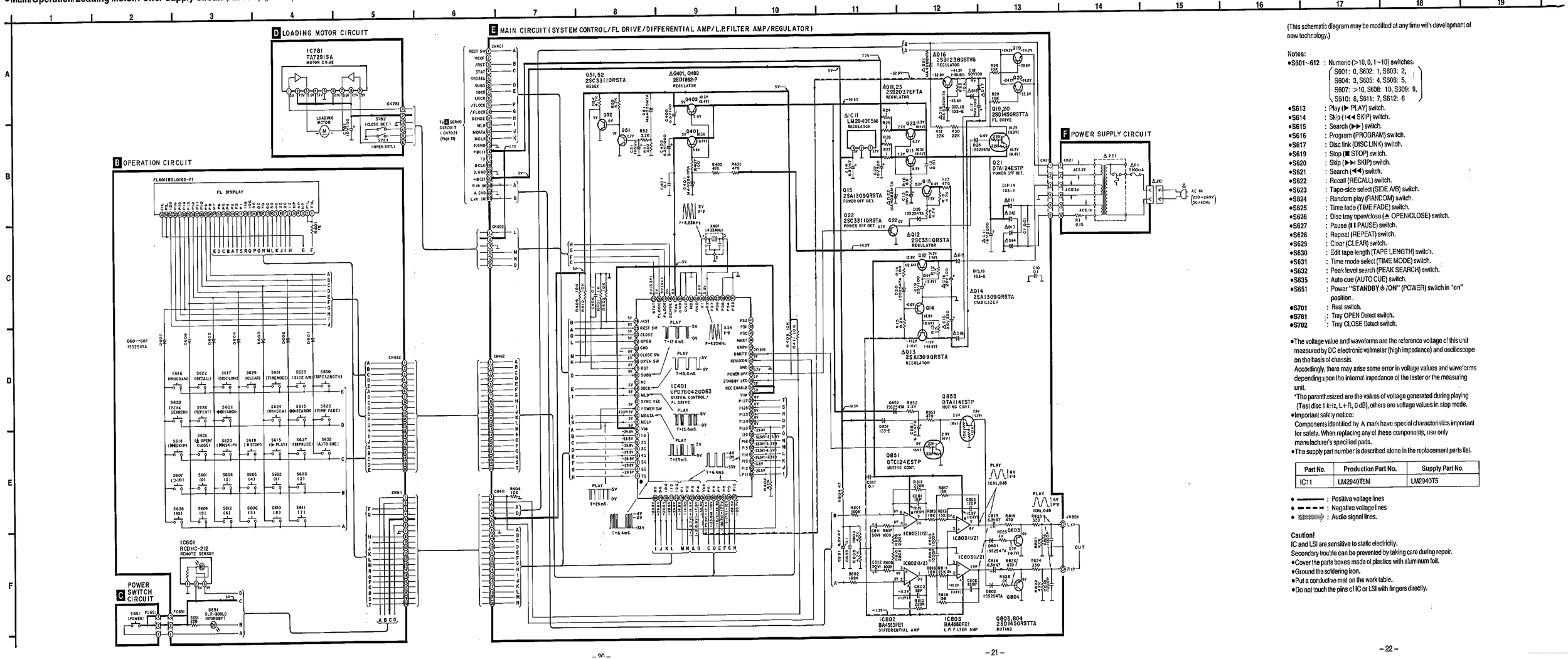

(This schematic diagram may be modified at any time with development of new technology.)

Notes:

- ●S601~612 : Numeric (>10, 0, 1~10) switches.
  (S601: 0, S602: 1, S603: 2, S604: 3, S605: 4, S606: 5, S607: >10, S608: 10, S609: 9, S610: 8, S611: 7, S612: 6)
- ●S613 : Play (▶ PLAY) switch.
- ●S614 : Skip (|◀◀ SKIP) switch.
- ●S615 : Search (▶▶) switch.
- ●S616 : Program (PROGRAM) switch.
- ●S617 : Disc link (DISC LINK) switch.
- ●S619 : Stop (■ STOP) switch.
- ●S620 : Skip (▶▶| SKIP) switch.
- ●S621 : Search (◀◀) switch.
- ●S622 : Recall (RECALL) switch.
- ●S623 : Tape-side select (SIDE A/B) switch.
- ●S624 : Random play (RANDOM) switch.
- ●S625 : Time fade (TIME FADE) switch.
- ●S626 : Disc tray open/close (≜ OPEN/CLOSE) switch.
- ●S627 : Pause (❚❚ PAUSE) switch.
- ●S628 : Repeat (REPEAT) switch.
- ●S629 : Clear (CLEAR) switch.
- ●S630 : Edit tape length (TAPE LENGTH) switch.
- ●S631 : Time mode select (TIME MODE) switch.
- ●S632 : Peak level search (PEAK SEARCH) switch.
- ●S635 : Auto cue (AUTO CUE) switch.
- ●S651 : Power "STANDBY ⏻ /ON" (POWER) switch in "on" position.
- ●S701 : Rest switch.
- ●S781 : Tray OPEN Detect switch.
- ●S782 : Tray CLOSE Detect switch.

●The voltage value and waveforms are the reference voltage of this unit measured by DC electronic voltmeter (high impedance) and oscilloscope on the basis of chassis.
Accordingly, there may arise some error in voltage values and waveforms depending upon the internal impedance of the tester or the measuring unit.
*The parenthesized are the values of voltage generated during playing (Test disc 1 kHz, L+R, 0 dB), others are voltage values in stop mode.

●Important safety notice:
Components identified by ⚠ mark have special characteristics important for safety. When replacing any of these components, use only manufacturer's specified parts.

●The supply part number is described alone in the replacement parts list.

Part No.	Production Part No.	Supply Part No.
IC11	LM2940T5M	LM2940T5

- ● ——— : Positive voltage lines
- ● - - - : Negative voltage lines
- ● ▒▒▒ : Audio signal lines.

Caution!
IC and LSI are sensitive to static electricity.
Secondary trouble can be prevented by taking care during repair.
●Cover the parts boxes made of plastics with aluminum foil.
●Ground the soldering iron.
●Put a conductive mat on the work table.
●Do not touch the pins of IC or LSI with fingers directly.

■Printed Circuit Board Diagram

•This circuit board diagram may be modified at any time with the development of new technology.

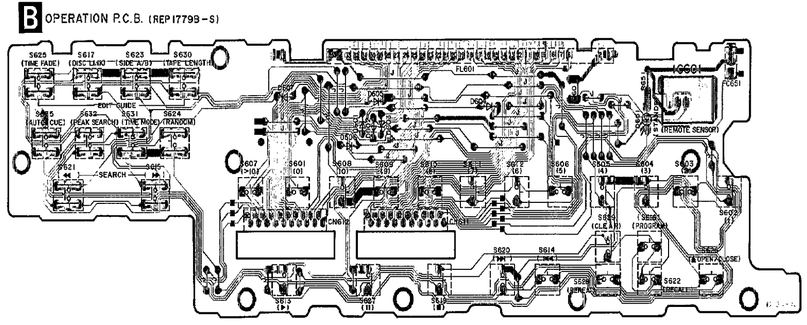

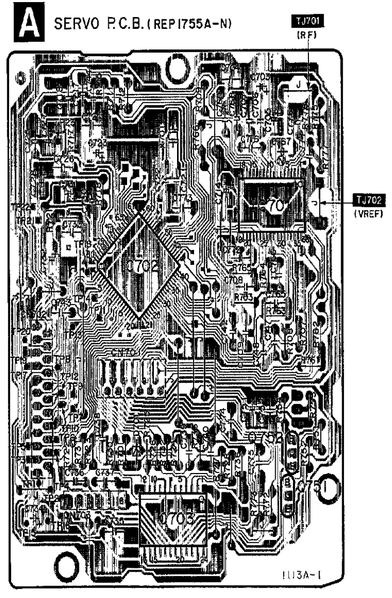

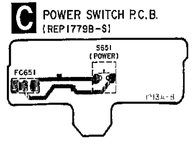

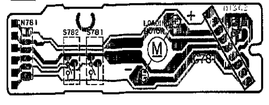

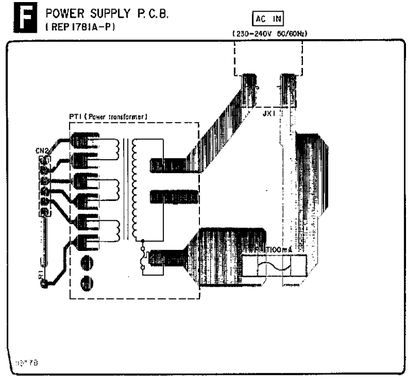

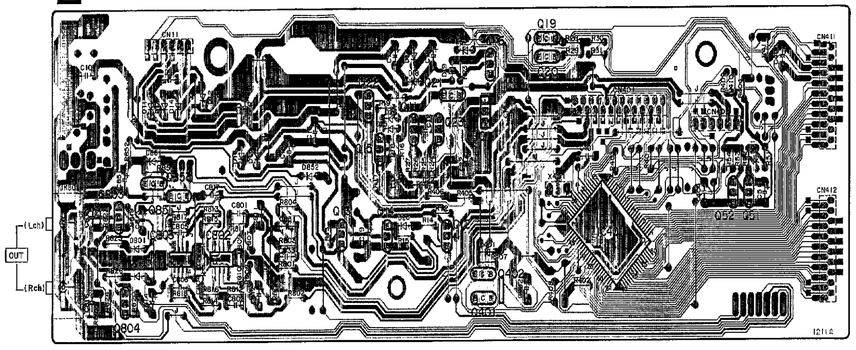

•Terminal guide of IC's, transistors and diodes

BA4560FE1	AN8389SE1	AN9805SBE1	MN662713RG1	UPD78042GC63	TA7291SA
LM2940T5 (I : IN, G : GND, O : OUT)	RCD/HC-212	2SA933SQRSTA 2SC1740SQSTA DTA114ESTP DTA124ESTP DTC124ESTP		2SA1309QRSTA 2SC3311QRSTA 2SD1450RSTTA	
2SD2037EFTA	2SB1238QSTV6 2SD1862-P	1SS254TA	1D3-E	MA4039MTA MA4056MTA MA4082MTA	
MA4330MTA	SLR-305LC				

■Wiring Connection Diagram

NOTES:
BLK ..... Black PNK ..... Pink
BLU ..... Blue RED ..... Red
BRN ..... Brown SLD ..... Shield Wire
GRY ..... Gray VLT ..... Violet
GRN ..... Green WHT ..... White
L.BLU ... Light Blue YEL ..... Yellow
ORG ..... Orange

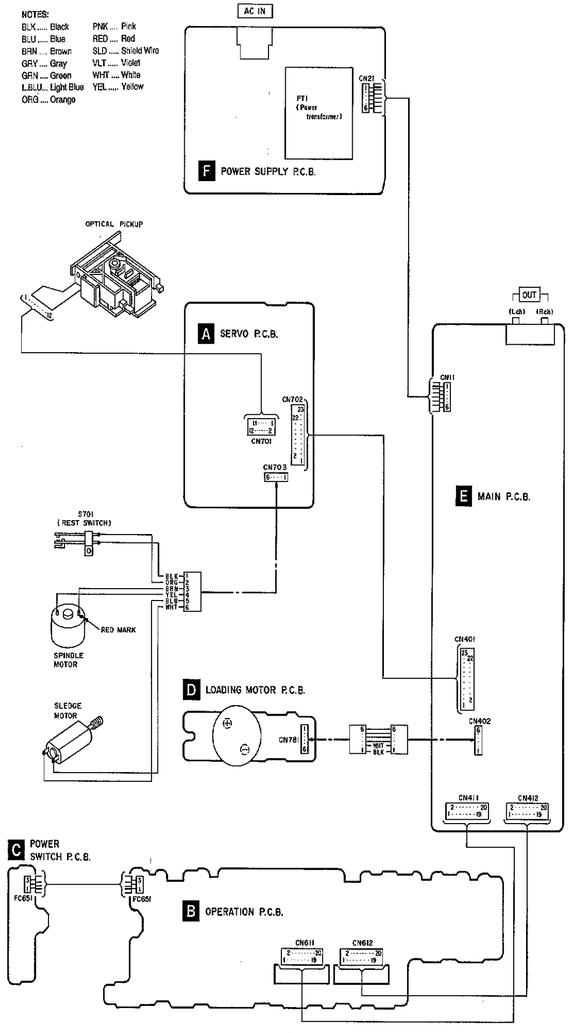

■Display Function of Automatically-Adjusted Results

(Self-Check Function)

The unit contains a function which displays the result of the automatically adjustment of the servo circuits (tracking, focus servo, etc.) as an error code on the FL display.
The error code display serves as a repair guide showing the automatically adjustment circuit is at fault. The procedures for displaying the error codes are given below.

• Procedures to display the error code

(1) Procedure to display the error code before disassembly (finished unit)

1. When the [POWER] key is pressed while holding down the [STOP (■)], [PAUSE (❚❚)] and [PLAY (▶)] keys simultaneously, the FL display illuminates, release the power turns on.
2. When the FL display illuminates, release the [STOP (■)], [PAUSE (❚❚)] and [PLAY (▶)] keys.
3. Press the [OPEN/CLOSE (⏏)] key to open the disc tray and load the test disc (SZZP1054C).
4. Press the [PLAY (▶)] key to start the play operation.
5. After the time display appears, press the [STOP (■)] key to display the error code. (e.g. E-0)
6. The error code display can be used as a repair guide showing which servo circuit is at fault. (See Error Code Based Troubleshooting.)

• Error code based troubleshooting

※The unit is satisfactory if the error code is E-0 of E-2.
※Before testing, check that the test disc is free of scratches and dirt and optical pickup is clean.

FL error code display	Symptom	Probable cause	Signal to check		Normal the values of voltage and waveform	
			Signal name	Location	PLAY	STOP
E-1	Focus and tracking offset adjustments did not complete in the specified time period.	① Clocks X1 and X2, power supply VDD, and reset/RST, all on IC702 ② MDATA, MCLK, MLD, and SENSE signals to/from the mechanism controller	MDATA	IC702 ⑧ pin		4.8V
			MCLK	IC702 ⑦ pin		4.8V
			MLD	IC702 ⑥ pin		0V
			SENSE	IC702 ⑤ pin		0V
			/RST	IC702 ⑩ pin	4.9V	4.9V
			X1	IC702 ㊾ pin		
			X2	IC702 ㊿ pin		
E-3 E-5 E-7 E-9 E-B E-D E-F	Disc play unstable	① Scratches or contaminants on disc surface ② Focus and tracking servo circuits (check waveforms, voltages, and part constants.) ③ Spindle driver circuit ④ Optical pickup	FE	IC702 ㉘ pin		2.4V
			TE	IC702 ㉙ pin		2.4V
			FOD	IC702 ㉚ pin	2.4V	2.4V
			TRD	IC702 ㉛ pin	2.4V	2.4V
			KICK	IC702 ㉜ pin	2.4V	2.4V
			/FLOCK	IC702 ⑪ pin	0V	4.9V
			/RF DET	IC702 ⑭ pin	0V	4.8V
			RF	TJ701		3.4V
			STAT	IC702 ⑰ pin	3.5V	0V
E-4 E-6 E-C E-E	Best Eye (PD Balance) adjustment diode not comxplete in the specified time period.	① Scratches or contaminants on disc surface ② Focus and Tracking servo circuit (check waveforms, voltages, and part constants.) ③ Optical pickup	FBAL	IC702 ㉑ pin	2.5 ±1.25V	2.5±1.25V
			RF	TJ701		3.4V
			FE	IC702 ㉘ pin		0V
			/TLOCK	IC702 ㉞ pin	0V	0V
			OFT	IC702 ㉝ pin	0V	0V
E-8 E-A	Focus or Tracking gain adjustment did not complete in the specified time period.	① Scratches or contaminants on disc surface ② Focus and Tracking servo circuit (check waveforms, voltages, and part constants.) ③ Optical pickup	FE	IC702 ㉘ pin		2.4V
			TE	IC702 ㉙ pin		2.4V
			/TLOCK	IC702 ㉞ pin	0V	0V
			OFT	IC702 ㉝ pin	0V	0V

■Digital Servo System

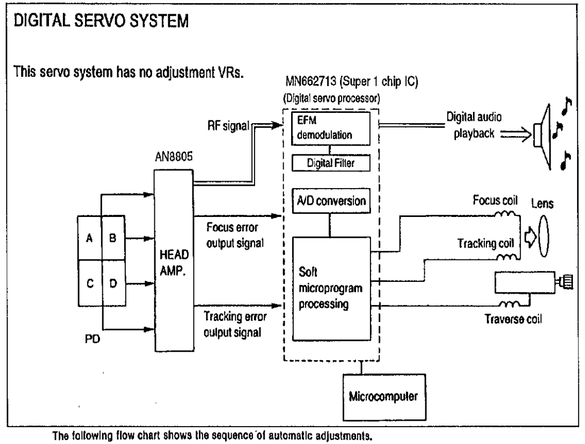

The following flow chart shows the sequence of automatic adjustments.

• Flow chart on automatic adjustment sequence

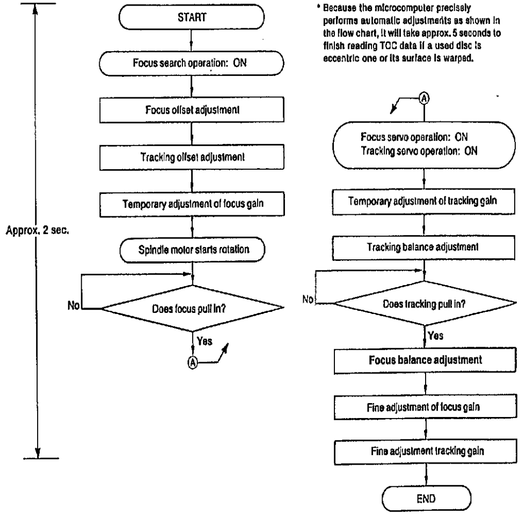

* Because the microcomputer precisely performs automatic adjustments as shown in the flow chart, it will take approx. 5 seconds to finish reading TOC data if a used disc is eccentric one or its surface is warped.

■Troubleshooting Guide

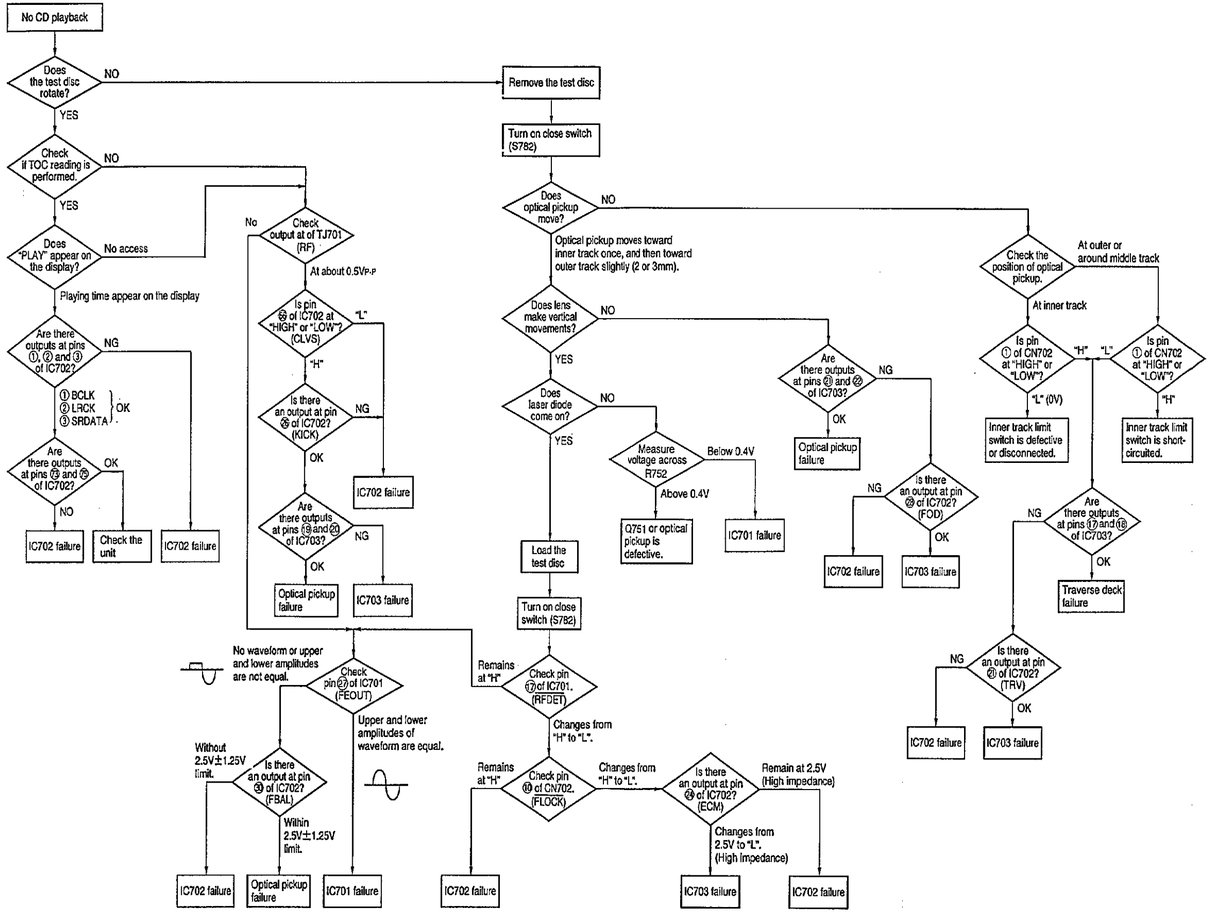

■Function of IC Terminals

●IC401 (UPD78042G063)

Pin No.	Terminal Name	I/O	Function
1 ∫ 7	7G ∫ 1G	O	FL grid drive signal output
8	VDD	—	Power supply
9	MCLK	O	Microprocessor command clock
10	MDATA	O	Microprocessor command data
11	POWER SW	I	Power key switch signal input
12	SYNC REC	O	Synchro REC signal output
13	/MLD	O	Microprocessor command load signal
14	SQCK	O	External clock for subcode Q register
15	NC	—	No used, open
16	SUBQ	I	Subcode Q input
17	RST	I	Reset signal input
18	/OPEN SW	I	Disc tray "open" sense switch status
19	/CLOSE SW	I	Disc tray "close" sense switch status
20	GND	—	GND
21	/OPEN	O	Open Disc Tray command output
22	/CLOSE	O	Close Disc Tray command output
23	REST SW	I	Innermost track sense switch status
24	/RST	O	Reset signal output
25	STAT	I	Status signal input
26	/TLOCK	I	Tracking servo pull-in signal
27	/FLOCK	I	Focus servo pull-in signal
28	SENSE	I	Sense signal input
29	AVDD	—	Power supply (for A/D convert)
30	GND	—	GND
31	GND	—	GND
32	NC	—	No used, open
33	GND	—	GND
34	X1	I	Main clock (4.2336 MHz) input
35	X2	O	Main clock output

Pin No.	Terminal Name	I/O	Function
36	P37	I	No used, open
36 ∫ 39	P36 ∫ P34	I	No used, open
40 • 41	P33 • P32	I	GND
42 • 43	P31 • P30	I	No used, open
44	MRST	O	*Reset signal for MASH (No used, open)*
45	EMPH	O	Emphasis signal (No used, open)
46	/DMUTE	O	Muting signal output
47	REMOCON	I	Remote control signal input
48	GND	—	GND
49	/POWER OFF	O	Power key switch signal output
50	/STANDBY LED	O	STANDBY LED control signal
51	REC ENABLE	I	REC control signal
52	VDD	—	Power supply
53 ∫ 57	P127 ∫ P123	I	Key return signal
58	12G	I	Connect FL Display 12G
59 • 60	P16 • P15	O	FL anode drive signal
61 ∫ 68	P14 ∫ P7	O	FL anode drive signal and key scan signal
69 • 70	P6 • P5	O	FL anode drive signal
71	VPP	—	*Power supply terminal for FL drive*
72 ∫ 75	P4 ∫ P1	O	FL anode drive signal
76 ∫ 80	12G ∫ 8G	O	FL grid drive signal

●IC703 (AN8389SE1)

Pin No.	Terminal Name	I/O	Function
1	Vcc	—	Power supply
2	VREF	I	VREF input
3	IN4	I	Motor driver (4) input
4	IN3	I	Motor driver (3) input
5	GND	—	Ground connection
6	NC	—	Ground connection
7	NRESET	—	Reset input (no used, open)
8	GND	—	Ground connection
9	IN2	I	Motor driver (2) input
10	PC2	I	PC2 (power cut) input
11	IN1	I	Motor driver (1) input
12	PC1	I	PC1 (power cut) input

Pin No.	Terminal Name	I/O	Function
13	PVcc1	—	Power supply (1) for driver
14	PGND1	—	Ground connection (1) for driver
15	D1-	O	Motor driver (1) reverse-action output
16	D1+	O	Motor driver (1) forward-action output
17	D2-	O	Motor driver (2) reverse-action output
18	D2+	O	Motor driver (2) forward-action output
19	D3-	O	Motor driver (3) reverse-action output
20	D3+	O	Motor driver (3) forward-action output
21	D4-	O	Motor driver (4) reverse-action output
22	D4+	O	Motor driver (4) forward-action output
23	PGND2	—	Ground connection (2) for driver
24	PVcc2	—	Power supply (2) for driver

●IC701 (AN8805SBE1)

Pin No.	Terminal Name	I/O	Function
1	PD	I	APC amplifier input
2	LD	O	APC amplifier output (No used, open)
3	LD ON/OFF	I	APC ON/OFF control signal
4	REFSW	I	Capacitor connection for CROSS
5	VCC	—	Power supply
6	RF-	I	RF amplifier inversion signal input
7	RF	O	*RF amplifier signal output*
8	RFIN	I	AGC signal input
9	CAGC	I	AGC loop filter connection
10	ARF	O	*AGC signal output*
11	CENV	I	Capacitor connection for RF detection
12	CEA	I	Capacitor connection for HPF amplifier
13	CSBDO	I	Capacitor connection for -RF envelope detection
14	EDO	O	*BDO signal output*
15	CSBRT	I	Capacitor connection for RF envelope detection
16	OFTR	O	OFTR signal output
17	/RFDET	O	RFDET signal output
18	Vss	—	GND
19	ENV	O	3TENV signal output
20	VREF	O	VREF signal output
21	LD OFF	—	APC OFF signal control
22	VDET	O	VDET signal output
23	TEBPF	I	VDET signal input
24	CROSS	O	CROSS signal output
25	TEOUT	O	TE amplifier signal output
26	TE-	I	TE amplifier inversion signal input
27	FEOUT	O	FE amplifier signal output
28	FE-	I	FE amplifier inversion signal input
29	FBAL	I	F BAL control signal
30	TBAL	I	T BAL control signal
31	PDFR	—	Adjustment for I-V amplifier conversion resister
32	PDER	—	*Adjustment for I-V amplifier* conversion resister
33	E	I	I-V amplifier signal input
34	F	I	I-V amplifier signal input
35	B+D	I	I-V amplifier signal input
36	A+C	I	I-V amplifier signal input

●IC702 (MN662713RG1)

Pin No.	Terminal Name	I/O	Function
1	BCLK	O	Bit clock output for serial data
2	LRCK	—	L.R identification signal output
3	SRDATA	—	Serial data output
4	DVdd1	—	Power supply input (for digital circuit)
5	DVss1	—	GND (for digital circuit)
6	TX	O	Digital audio interface signal output
7	MCLK	I	*Microprocessor command clock signal* input (Latches data at first transition)
8	MDATA	I	Microprocessor command data signal input
9	MLD	I	Microprocessor command load signal input
10	SENSE	O	Sense signal output (OFT, FESL, MAGEND, NAJEND, POSAD, SFG)
11	/FLOCK	O	Focus servo feeding signal output ("L": Feed)
12	/TLOCK	O	Tracking servo feeding signal output ("L": Feed)
13	BLKCK	O	Sub-code block clock signal output (fBLKCK = 75 Hz during normal playback) (no used, open)
14	SQCK	I	External clock signal input for sub-code Q register
15	SUBQ	O	Sub-code Q code output
16	DMUTE	I	Muting input ("H": Mute)
17	STAT	O	Status signal output (CRC, CUE, CLVS, TTSTVP, FCLV, SQCK)
18	/RST	I	Reset input
19	SMCK	—	1/2-divided clock signal of crystal oscillating at MSEL = "H" (fSMCK = 8.4672 MHz) 1/4-divided clock signal of crystal oscillating at MSEL = "L" (fSMCK = 4.2336 MHz) (no used, open)
20	PMCK	—	1/192-divided clock signal of crystal oscillating (fPMCK = 88.2 kHz) (no used, open)
21	TRV	O	Traverse forced feed output
22	TVD	O	Traverse drive output
23	PC	O	Spindle motor ON signal output ("L": ON)
24	ECM	O	Spindle motor drive signal output (forced mode output)
25	ECS	O	Spindle motor drive signal output (*servo error signal output*)
26	KICK	O	Kick pulse output
27	TRD	O	Tracking drive output
28	FOD	O	Focus drive output
29	VREF	I	D/A (drive) output (TVD, ECS, TRD, FOD, FBAL, TBAL) reference voltage input
30	FBAL	O	Focus balance adjustment output
31	TBAL	O	Tracking balance adjustment output

●IC702 Continued

Pin No.	Terminal Name	I/O	Function
32	FE	I	Focus error signal input (analog input)
33	TE	I	Tracking error signal input (analog input)
34	RFENV	I	RF envelope signal input
35	VDET	I	Vibration detection signal input ("H": detection)
36	OFT	I	Off-track signal input ("H": off track)
37	TRCRS	I	Track cross signal input
38	/RFDET	I	*RF detection signal input* ("L": detection)
39	BDO	I	Dropout signal input ("H": Dropout)
40	LDON	O	Laser on signal output ("H": ON)
41	TES	O	Tracking error shunt signal output ("H": shunt) (no used, open)
42	PLAY	O	Play signal out ("H": PLAY) (no used, open)
43	WVEL	O	Double speed status signal output ("H": Double speed) (no used, open)
44	ARF	I	RF signal input
45	IREF	I	Reference current input
46	DRF	—	DSL bias (no used, open)
47	DSLF	I/O	DSL loop filter
48	PLLF	I/O	PLL loop filter
49	VCOF	I/O	VCO loop filter
50	AVdd2	—	Power supply input (for analog circuit)
51	AVss2	—	GND (for analog circuit)
52	EFM	—	EFM signal output (not used, open)
53	PCK	—	*PLL extraction clock output* (fPCK = 4.321 MHz during normal playback) (no used, open)
54	PDO	—	Phase comparison signal of EFM and PCK signals (no used, open)
55	SUBC	O	Sub-code serial data output (no used, open)
56	SBCK	I	Clock input for sub-code serial data
57	Vss	—	GND
58	X1	I	Crystal oscillating circuit input (f = 16.9344 MHz)
59	X2	O	Crystal oscillating circuit output (f = 16.9344 MHz)
60	Vdd	—	Power supply input (for oscillating circuit)
61	BYTCK	—	Byte clock output (no used, open)
62	/CLDCK	O	Sub-code frame clock signal output (fCLDCK = 7.35 kHz during normal playback)
63	FCLK	—	Crystal frame clock signal output (*fFCLK = 7.35 kHz,* double = 14.7 kHz)
64	IPFLAG	O	Interpolation flag output ("H": Interpolation) (no used, open)
65	FLAG	O	Flag output (no used, open)

Pin No.	Terminal Name	I/O	Function
66	CLVS	O	Spindle servo phase synchronizing signal output ("H": CLV, "L": rough servo) (no used, open)
67	CRC	O	Sub-code CRC checked output ("H": OK, "L": NG) (no used, open)
68	DEMPH	O	De-emphasis ON signal output ("H": ON) (no used, open)
69	RESY	—	Frame resynchronizing signal output (no used, open)
70	/RST2	I	Reset input through MASH circuit *("L": Reset)*
71	/TEST	I	Test input
72	AVdd1	—	Power supply input (for analog circuit)
73	OUTL	O	*Left channel* audio signal output
74	AVss1	—	GND
75	OUTR	O	Right channel audio signal output
76	RSEL	I	RF signal polarity assignment input (at "H" level: RSEL = "H", at "L" level: RSEL = "L")
77	CSEL	I	Crystal oscillating frequency designation input ("L": 16.9344 MHz, "H": 33.8688 MHz)
78	PSEL	I	Test input (normally, "L")
79	MSEL	I	Output frequency switching for SMCK terminal "H": SMCK = 8.4672 MHz "L": SMCK = 4.2336 MHz
80	SSEL	I	*Output mode switching of SUBQ* terminal ("H": Q code buffer mode)

■Replacement Parts List

Notes: •Important safety notice:
Components identified by ⚠ mark have special characteristics important for safety.
Furthermore, special parts which have purposes of fire-retardant (resistors), high-quality sound (capacitors), low-noise (resistors), etc. are used.
When replacing any of components, be sure to use only manufacturer's specified parts shown in the parts list.
•The parenthesized indications in the Remarks columns specify the areas. (Refer to the cover page for area.)
Parts without these indications can be used for all areas.
•[MB] Indicates in Remarks columns parts that are supplied by MBV.
•Warning: This product uses a laser diode. Refer to caution statements on page 2.
•ACHTUNG: Die lasereinheit nicht zerlegen.
Die lasereinheit darf nur gegen eine vom hersteller spezifizierte einheit ausgetauscht werden.
•The "(SF)" mark denotes the standard part.

Ref. No.	Part No.	Part Name & Description	Remarks
		INTEGRATED CIRCUIT(S)	
IC11	LM2940T5	I. C, REGULATOR	⚠
IC401	UPD78042G063	I. C, SYSTEM CONTROL	[MB]
IC601	RCDHC-212	I. C, REMOTE SENSOR	[MB]
IC701	AN8805SBE1	I. C, SERVO AMP.	[MB]
IC702	MN662713RG1	I. C, SERVO PROCESSOR	[MB]
IC703	AN8389SE1	I. C, MOTOR DRIVE	
IC781	TA7291SA	I. C, MOTOR DRIVE	
IC802, 803	BA4560FE1	I. C, DIFFERENTIAL&L. P. F. AMP	[MB]
		TRANSISTOR(S)	
Q11	2SD2037EFTA	TRANSISTOR	⚠
Q12	2SC3311A-Q	TRANSISTOR	⚠
Q13-14	2SA1309A-R	TRANSISTOR	⚠
Q15	2SA1309A-R	TRANSISTOR	
Q16	2SB1238QSTV6	TRANSISTOR	⚠
Q19, 20	2SD1450RTA	TRANSISTOR	
Q21	DTA124ESTP	TRANSISTOR	
Q22	2SC3311A-Q	TRANSISTOR	
Q23	2SD2037EFTA	TRANSISTOR	⚠
Q51, 52	2SC3311A-Q	TRANSISTOR	
Q401, 402	2SD1862-P	TRANSISTOR	⚠
Q751	2SA933SQR	TRANSISTOR	
Q752	2SC1740SQ	TRANSISTOR	
Q803, 804	2SD1450RTA	TRANSISTOR	
Q851	DTC124EST	TRANSISTOR	
Q853	DTA114ESTP	TRANSISTOR	
		DIODE(S)	
D11-18	1D3-E	DIODE	⚠[MB]
D19	MA4330HTA	DIODE	⚠
D20	1SS254TA	DIODE	
D21, 22	MA4082MTA	DIODE	⚠
D25, 26	1SS254TA	DIODE	
D51	MA4039HTA	DIODE	
D401	MA4056MTA	DIODE	
D601-607	1SS254TA	DIODE	
D651	SLR-305LC	LED	
D701	1SS254TA	DIODE	
D801, 802	1SS254TA	DIODE	
D851	1D3-E	DIODE	[MB]

Ref. No.	Part No.	Part Name & Description	Remarks
D852	1SS254TA	DIODE	
		TRANSFORMER(S)	
PT1	RTP1K4B020	POWER TRANSFORMER	⚠[MB]
		OSCILLATOR(S)	
X401	RSXY4M23M01T	OSCILLATOR(4.23MHz)	
X701	RSXZ16M9M01T	OSCILLATOR(16.9MHz)	
		DISPLAY TUBE	
FL601	RSL0169-F	DISPLAY TUBE	[MB]
		SWITCH(ES)	
S601	EVQ21405R	SW, 0	
S602	EVQ21405R	SW, 1	
S603	EVQ21405R	SW, 2	
S604	EVQ21405R	SW, 3	
S605	EVQ21405R	SW, 4	
S606	EVQ21405R	SW, 5	
S607	EVQ21405R	SW, >10	
S608	EVQ21405R	SW, 10	
S609	EVQ21405R	SW, 9	
S610	EVQ21405R	SW, 8	
S611	EVQ21405R	SW, 7	
S612	EVQ21405R	SW, 6	
S613	EVQ21405R	SW, PLAY	
S614	EVQ21405R	SW, R. SKIP	
S615	EVQ21405R	SW, F. SERACH	
S616	EVQ21405R	SW, PROGRAM	
S617	EVQ21405R	SW, DISC LINK	
S619	EVQ21405R	SW, STOP	
S620	EVQ21405R	SW, F. SKIP	
S621	EVQ21405R	SW, R. SERACH	
S622	EVQ21405R	SW, RECALL	
S623	EVQ21405R	SW, SIDE A/B	
S624	EVQ21405R	SW, RANDOM	
S625	EVQ21405R	SW, TIME FADE	
S626	EVQ21405R	SW, OPEN/CLOSSE	
S627	EVQ21405R	SW, PAUSE	
S628	EVQ21405R	SW, REPEAT	
S629	EVQ21405R	SW, CLEAR	

Free Datasheet http://www.datasheet4u.com/

Ref. No.	Part No.	Part Name & Description	Remarks
S630	EVQ21405R	SW, TAPE LENGTH	
S631	EVQ21405R	SW, TIME MODE	
S632	EVQ21405R	SW, PEAK SEARCH	
S635	EVQ21405R	SW, AUTO CUE	
S651	EVQ21405R	SW, POWER	
S781	RSH1A005	SW, TRAY OPEN DET.	
S782	RSH1A005	SW, TRAY CLOSE DET.	
		FUSE	
F1	XBA2C01TB0	FUSE, 250V T100mA	⚠
		JACK(S)	
JK1	SJS9236	AC INLET	⚠
JK801	RJH3201N	LINE OUT	
		CONNECTOR	
CN11	RJS1A6606	CONNECTOR(6P)	
CN21	RJS1A6606	CONNECTOR(6P)	
CN401	RJS1A6823	SOCKET(23P)	
CN402	RJT029W06VT	CONNECTOR(6P)	
CN411, 412	RJU076W20M	CONNECTOR(20P)	[MB]
CN611, 612	RJT076W20M	CONNECTOR(20P)	[MB]
CN701	RJS12Q9ZA	SOCKET(12P)	[MB]
CN702	RJS1A6723-1Q	SOCKET(23P)	
CN703	RJT029W06VT	CONNECTOR(6P)	
CN781	RJP6G17ZA	CONNECTOR(6P)	

Notes : * Capacity values are in microfarads (uF) unless specified otherwise, P=Pico-farads(pF) F=Farads(F)
* Resistance values are in ohms, unless specified otherwise, 1K=1,000(OHM) , 1M=1,000k(OHM)

Ref. No.	Part No.	Values & Remarks
		RESISTORS
R1	ERQ16NKWR15E	1W 0.15
R12, 13	ERDS2TJ102	1/4W 1K
R14	ERDS2TJ103	1/4W 10K
R15	ERDS2TJ822	1/4W 8.2K
R16	ERDS2TJ680T	1/4W 68
R17	ERDS2TJ471	1/4W 470
R18	ERDS2TJ473	1/4W 47K
R19	ERDS2TJ472	1/4W 4.7K
R23	ERDS2TJ103	1/4W 10K
R24-27	ERDS2TJ1R0	1/4W 1.0
R28, 29	ERDS2TJ103	1/4W 10K
R30, 31	ERDS2TJ223	1/4W 22K
R51	ERDS2TJ331	1/4W 330
R52	ERDS2TJ272T	1/4W 2.7K
R53, 54	ERDS2TJ472	1/4W 4.7K
R401	ERDS2TJ102	1/4W 1K
R402	ERDS2TJ473	1/4W 47K
R403, 404	ERDS2TJ103	1/4W 10K
R405, 406	ERDS2TJ471	1/4W 470
R407	ERDS2TJ101	1/4W 100
R408-411	ERDS2TJ103	1/4W 10K
R601	ERDS2TJ120T	1/4W 12
R651	ERDS2TJ221	1/4W 220
R701	ERDS2TJ561	1/4W 560
R703	ERDS2TJ823T	1/4W 82K
R707, 708	ERDS2TJ334	1/4W 330K
R709	ERDS2TJ683	1/4W 68K
R711	ERDS2TJ154	1/4W 150K
R712	ERDS2TJ221	1/4W 220
R717, 718	ERDS2TJ102	1/4W 1K
R721	ERDS2TJ101	1/4W 100
R722	ERDS2TJ683	1/4W 68K
R723	ERDS2TJ183T	1/4W 18K
R724	ERDS2TJ393	1/4W 39K
R725	ERDS2TJ472	1/4W 4.7K
R726	ERDS2TJ474	1/4W 470K
R727	ERDS2TJ153	1/4W 15K
R728	ERDS2TJ822	1/4W 8.2K
R731	ERDS2TJ223	1/4W 22K
R732	ERDS2TJ183T	1/4W 18K
R733	ERDS2TJ822	1/4W 8.2K
R735, 736	ERDS2TJ101	1/4W 100
R745	ERDS2TJ155	1/4W 1.5M
R751	ERDS2TJ681	1/4W 680
R752, 753	ERDS2TJ392T	1/4W 3.9K
R754	ERDS2TJ103	1/4W 10K

Ref. No.	Part No.	Values & Remarks
R761, 762	ERDS2TJ103	1/4W 10K
R763	ERDS2TJ823T	1/4W 82K
R764	ERDS2TJ393	1/4W 39K
R765	ERDS2TJ224T	1/4W 220K
R766	ERDS2TJ104	1/4W 100K
R772, 773	ERDS2TJ220T	1/4W 22
R775, 776	ERDS2TJ392T	1/4W 3.9K
R777	ERDS2TJ102	1/4W 1K
R801, 802	ERDS2TJ104	1/4W 100K
R803	ERDS2TJ472	1/4W 4.7K
R804	ERDS2TJ470	1/4W 47
R805	ERDS2TJ472	1/4W 4.7K
R807, 808	ERDS2TJ104	1/4W 100K
R809-812	ERDS2TJ224T	1/4W 220K
R813, 814	ERDS2TJ153	1/4W 15K
R815, 816	ERDS2TJ183T	1/4W 18K
R817, 818	ERDS2TJ153	1/4W 15K
R819, 820	ERDS2TJ471	1/4W 470
R821, 822	ERDS2TJ473	1/4W 47K
R823, 824	ERDS2TJ331	1/4W 330
R825, 826	ERDS2TJ102	1/4W 1K
R851	ERDS2TJ471	1/4W 470
R852	ERDS2TJ222	1/4W 2.2K
		CAPACITORS
C1	ECFTD103KXL	50V 0.01U
C10	ECFR1E104ZF5	25V 0.1U
C11	ECA1CM222B	16V 2200U ⚠
C12	ECBT1C103NS5	16V 0.01U
C13	ECEA1AKA330B	10V 33U
C14	ECEA0JKA470B	6.3V 47U
C15	ECEA1EU101	25V 100U ⚠
C16	ECEA1EU331	25V 330U ⚠
C17, 18	ECEA1HU101	50V 100U
C19	ECEA1EU101	25V 100U
C22	ECEA1AU331	10V 330U
C51	ECEA1AKA220B	10V 22U
C401	ECFR1E104ZF5	25V 0.1U
C402	ECEA0JU102	6.3V 1000U
C404	ECFR1E104ZF5	25V 0.1U
C405	ECEA0JKA101B	6.3V 100U
C703	ECEA0JKA101I	6.3V 100U
C704	ECFR1E104ZF5	25V 0.1U
C705	ECEA1HKA010I	50V 1U
C706	ECBT1H101KB5	50V 100P
C707	ECFR1C273KR	16V 0.027U
C708	ECBT1C472MR5	16V 4700P
C709	ECFR1C473KR	16V 0.047U

Ref. No.	Part No.	Values & Remarks
C714	ECEA0JKA101I	6.3V 100U
C716	ECBT1H561KB5	50V 560P
C717	ECFR1E104ZF5	25V 0.1U
C718	ECQV1H224JM3	50V 0.22U
C721, 722	ECBT1H270J5	50V 27P
C723	ECEA0JKA221B	6.3V 220U
C724	ECFR1E104ZF5	25V 0.1U
C725, 726	ECBT1H102KB5	50V 1000P
C727, 728	ECEA1HKA010I	50V 1U
C730	ECFR1E104ZF5	25V 0.1U
C731, 732	ECEA0JKA221B	6.3V 220U
C733	ECFR1E104ZF5	25V 0.1U
C734	ECEA1AKA221I	10V 220U
C735-737	ECBT1E223ZF	25V 0.022U
C738	ECFR1C183KR	16V 0.018U
C739	ECBT1C152MR5	16V 1500P
C740	ECBT1C272MR5	16V 2700P
C742	ECFR1C273KR	16V 0.027U
C743	ECBT1E223ZF	25V 0.022U
C744	ECBT1C822MS5	16V 8200P
C747, 748	ECBT1C103NS5	16V 0.01U
C751	ECEA1CKA100I	16V 10U
C752	ECFR1E104ZF5	25V 0.1U
C765	ECBT1H331KB5	50V 330P
C766	ECBT1H391KB5	50V 390P
C767	ECEA1HKN010I	50V 1U
C768	ECFR1E682KR	25V 6800P
C769	ECBT1C222MR5	16V 2200P
C772-775	ECFR1E104ZF5	25V 0.1U
C776	ECBT1H180J5	50V 18P
C777	ECBT1H680J5	50V 68P
C781	ECEA1AKA101I	10V 100U
C801, 802	ECBT1H180J5	50V 18P
C803, 804	ECBT1H102KB5	50V 1000P
C805, 806	ECBT1H121KB5	50V 120P
C811, 812	ECEA1HKA010B	50V 1U
C813, 814	ECEA0JKA470B	6.3V 47U
C815, 816	ECBT1H102KB5	50V 1000P
C817	ECFR1E104ZF5	25V 0.1U
C831	ECEA0JKA470B	6.3V 47U
C833	ECFR1E104ZF5	25V 0.1U
C851	ECEA0JU471	6.3V 470U

Free Datasheet http://www.datasheet4u.com/

■Cabinet Parts Location

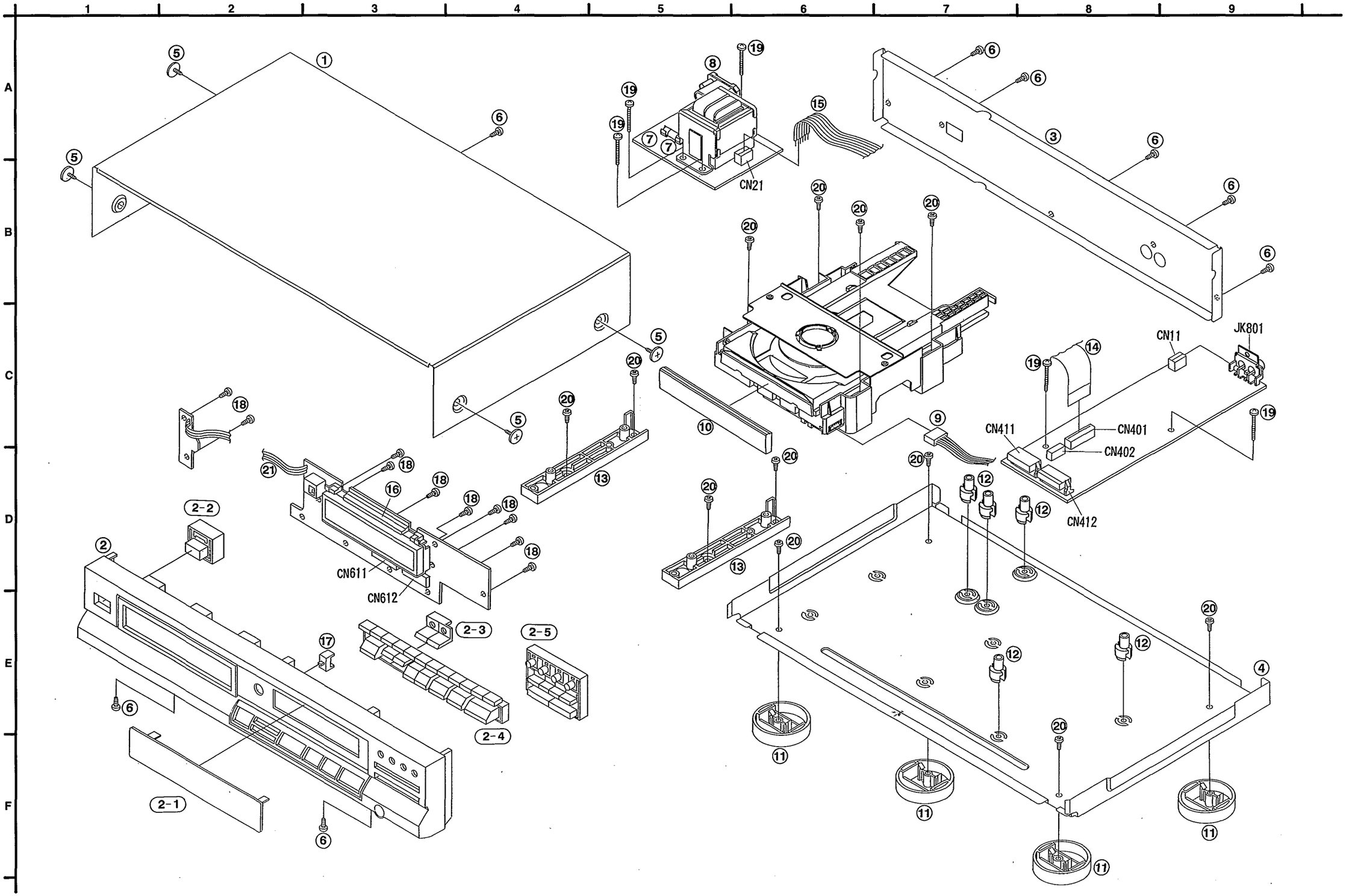

■Loading Unit Parts Location

Note:
When changing mechanism parts, apply the specified grease to areas marked "xx" as shown in the drawing.

Ref No.	Part No.
❶	RFKXEM30L

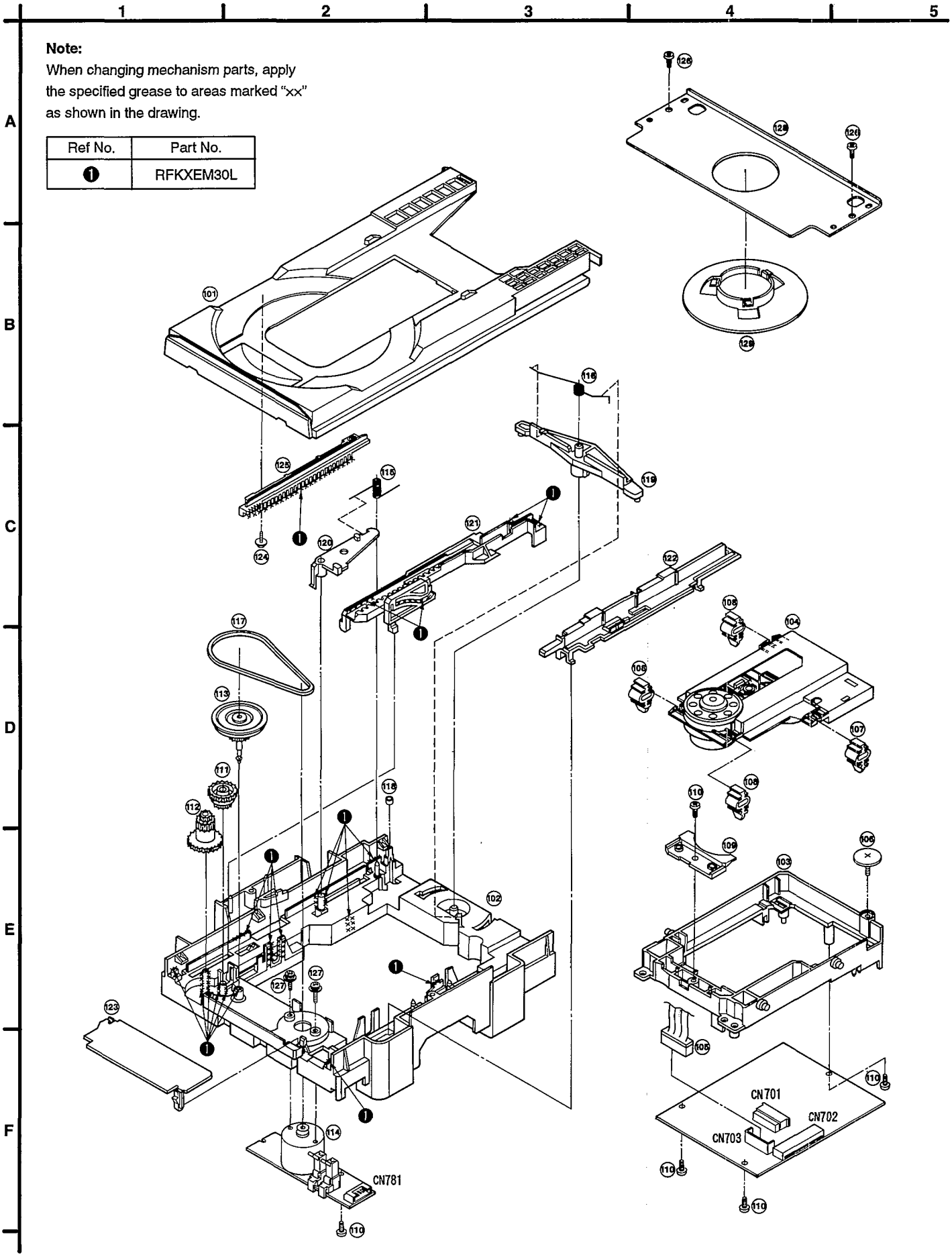

909

Ref. No.	Part No.	Part Name & Description	Remarks
		CABINET PARTS	
1	RKM0098-K	CABINET	[MB]
2	RFKGLPG360AE	FRONT PANEL ASS'Y	[MB]
2-1	RKW0245D-R	WINDOW	[MB]
2-2	RGU1029-K	POWER BUTTON	[MB]
2-3	RFKNLPG460AD	MAIN BUTTON A	[MB]
2-4	RFKNLPG460AE	MAIN BUTTON B	[MB]
2-5	RGU0808-K	SUB BUTTON	[MB]
3	RFKHLPG360AE	REAR PANEL ASS'Y	[MB] (E) (EG)
3	RFKHLPG360AB	REAR PANEL ASS'Y	[MB] (EB)
4	RMK0178-1	BOTTOM CHASSIS	[MB]
5	RHD30035-K	SCREW	
6	XTBS3+8JFZ1	SCREW	
7	EYF52BC	FUSE HOLDER	
8	SJS9236	AC INLET(JK1)	⚠
9	REX0577	CABLE ASS'Y	[MB]
10	RGK0616-K	TRAY LID	[MB]
11	RKA0040B	FOOT	[MB]
12	RMR0377-1	PCB SUPPORT	[MB]
13	RMR0718-W	MECHANISM SPACER	[MB]
14	RWJ5223180EE	FPC	[MB]
15	RWJ6406180XX	FLAT CABLE	[MB]
16	RMR0659-K	FL HOLDER	[MB]
17	RGL0228-Q	LED INDICATOR	[MB]
18	XTBS26+8J	SCREW	
19	XTB3+20JFR	SCREW	
20	XTB3+8JFZ	SCREW	
21	RWJ6403200XX	FLAT CABLE(FC651)	[MB]
		LOADING UNIT PARTS	
101	RGQ0130-K	TRAY	[MB]
102	RFKJLPG460AE	MECHANISM CHASSIS ASS'Y	[MB]
103	RMR0719-W	MID, CHASSIS	[MB]
104	RAE1100Z	TRAVERSE UNIT	[MB]
105	REX0576	CABLE ASS'Y	[MB]
106	RHD30047	SCREW	[MB]
107	RMG0337-K	DAMPING RUBBER	[MB]
108	RMG0337-Q	DAMPING RUBBER	[MB]
109	RMR0750-W	STOPPER	[MB]
110	XTBS26+8J	SCREW	
111	RDG0142	RELAY GEAR	
112	RDG0259	DRIVE GEAR	[MB]
113	RDP0065	RELAY PULLY	
114	REM0047	MOTOR ASS'Y	[MB]
115	RME0063	LOCK LEVER SPRING	
116	RME0087	ASSIST SPRING	
117	RMG0158	BELT	
118	RMG0338-Q	STOPPER RUBBER	[MB]
119	RML0177	CHANGE LEVER	
120	RML0178-1	LOCK LEVER	
121	RMM0112	SLIDER 1	[MB]
122	RMM0113	SLIDER 2	[MB]
123	RMR0721-K	GEAR COVER	[MB]
124	RHD20009-1	SCREW	
125	RFKNLPG460AA	DRIVE RACK ASS'Y	[MB]
126	XTB3+8JFZ	SCREW	
127	XYN2+F6FZ	SCREW	
128	RFKNLPG460AB	CLAMP BASE ASS'Y	[MB]
129	RFKNLPG460AC	CLAMPER ASS'Y	[MB]
		PACKING MATERIALS	
P1	RPG1906	PACKING CASE	[MB]
P2	RPN0647	CUSHION	[MB]
P3	XZB23X35C03	PROTECTION BAG	
P4	XZB60X65A01Z	PROTECTION BAG	
		ACCESSORIES	
A1	RJA0043-C	AC POWER CORD	⚠(E, EG) [MB]
A1	RJA0034-P	AC POWER CORD	⚠(EB) [MB]
A2	RFKSLPG360AE	INSTRUCTIONS MANUAL	(E) [MB]
A2	RQT2226-B	INSTRUCTIONS MANUAL	(EB) [MB]
A2	RFKSLPG360AG	INSTRUCTIONS MANUAL	(EG) [MB]
A3	SJP2249-3	STEREO PIN CORD	
A4	RQA0013	WARRANTY CARD	
A5	RQCB0169	SERVICE CENTER LIST	

■Packaging

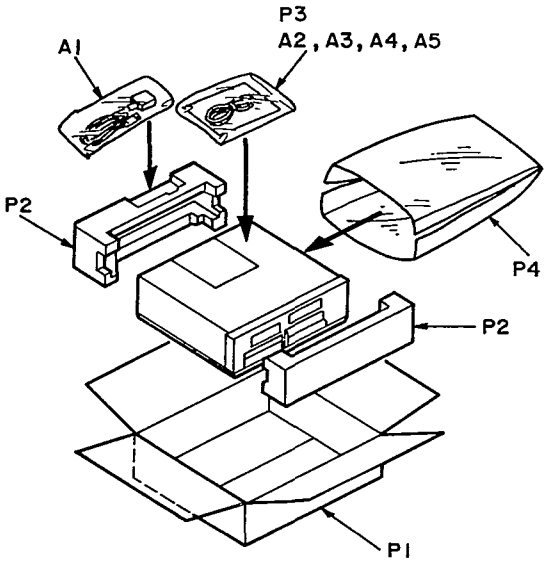

Printed in Germany
MBV F9402 TW/HH/TN