Features

- Internal current sense resistor
- High accuracy current monitor output (sample & hold function)
- Built-in overcurrent and thermal protection circuits

Absolute Maximum Ratings

(Ta=25°C)

Parameter	Symbol	Ratings	Unit	Conditions
Power supply voltage 1	V_B	0 to 32	V	
Power supply voltage 2	Vcc	–0.5 to 7.0	V	
Power supply voltage 3	V_B	0 to 40	V	V_B terminal, t=1 min
Current sensing voltage	$Vsense^+$	–0.8 to 6	V	
	$Vsense^-$	$Vsense^+ \pm Io \bullet Rsense$		
Output terminal voltage	V_{OUT}	–2 to 32	V	
Input terminal voltage	V_{PWM}	–0.5 to 7.0	V	
	V_{Hold}			
Output current	I_{OUT}	2.0	A	
Power dissipation	P_D	2.4 to 5.0	W	Depends on surface-mount board pattern
Storage temperature	Tstg	–40 to +150	°C	
Channel temperature	Tch	150	°C	

Electrical Characteristics

(V_B=14V, Ta=25°C unless otherwise specified) – One circuit equivalent

Parameter	Symbol	Ratings min	Ratings typ	Ratings max	Unit	Conditions
Min. operating power supply voltage	V_B min	6			V	Minimum operation of OUT terminal.
Operating power supply voltage 1	V_B	10	14	16	V	*1
Operating power supply voltage 2	Vcc		5.0		V	*2
Quiescent circuit current 1	Iqvb			7.2	mA	Vcc=5V, V_{PWM}=0V, One circuit equivalent
Quiescent circuit current 2	Iqvcc			0.2	mA	Vcc=5V, V_{PWM}=0V
PWM terminal input voltage	$V_{PWM}H$	3.5			V	Vcc=5V
	$V_{PWM}L$			1.5		
PWM terminal input current	$I_{PWM}H$		70	110	μA	Vcc=5V, V_{PWM}=5V, Active H *3
Hold terminal input voltage	$V_{Hold}H$	3.5			V	Vcc=5V
	$V_{Hold}L$			1.5		
Hold terminal input current	$I_{Hold}H$		70	110	μA	Vcc=5V, V_{PWM}=5V, Active H *3
Output ON resistance	R_{DSon}			0.14	Ω	I_{OUT}=1A
				0.21	Ω	I_{OUT}=1A, Ta=125°C
Current sensing resistance	Rsense			0.21	Ω	I_{OUT}=1A
				0.25	Ω	I_{OUT}=1A, Ta=125°C
Overcurrent protection starting current	Is	3.0			A	*4
Thermal shutdown operating temperature	Ttsd	150			°C	
Operation circuit for current monitor output	Io	0.2		1.2	A	*1
Current monitor output voltage	V_{SH}			0.2	V	Io=0A, Vcc=5V
		0.488	0.500	0.512	V	Io=0.2A, Vcc=5V
		1.219	1.250	1.281	V	Io=0.5A, Vcc=5V, Ta=–40 to 140°C
		2.925	3.000	3.075	V	Io=1.2A, Vcc=5V, Ta=–40 to 140°C
Current monitor output current	I_{SH}			5	mA	Io=1A, Vcc=5V, V_{SH}=0V
		–6			mA	Io=1A, Vcc=5V, V_{SH}=5V
Output transfer time	t_{on}			15	μs	Io=0.5A, Vcc=5V
	t_{off}			15	μs	
Output rise time	t_r			100	μs	
Output fall time	t_f			50	μs	
Current monitor output hold time	t_{sh}	500		650	μs	Io=0.5A, Vcc=5V, C1=0.033μF
Current monitor output delay time	t_{shd}			1	μs	
Hold time after inputting hold	t_{shh}			2	μs	
S/H settling time	t_{stt}			70	μs	V_B=11V, Vcc=5V, Io=1.2A, C1=0.033μF
				80	μs	V_B=11V, Vcc=5V, Io=1.2A, C1=0.033μF, Ta=125°C

Note:
*1: Accuracy warranty range for current monitor output
*2: Equivalent errors are not included in current monitor output accuracy.
*3: With built-in pull-down resistance (70kΩ typ)
*4: Self-excitation and oscillation type
*5: Accuracy of current monitor output is affected by the materials of the hold capacitor (C1).
The capacitor C1 must be of low dielectric absorption and have good bias and leak current characteristics.

External Dimensions (unit: mm)

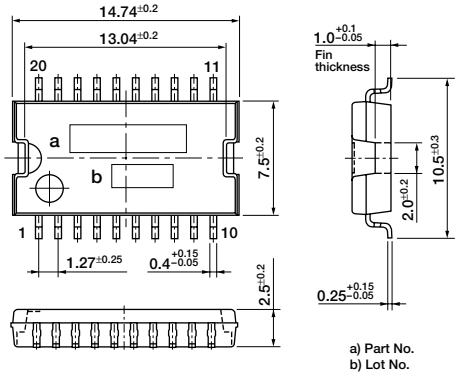

Block Diagram (for one channel)

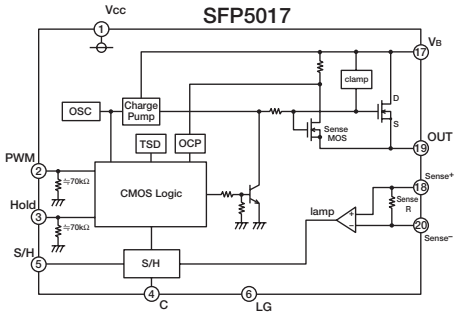

Standard Connection Diagram

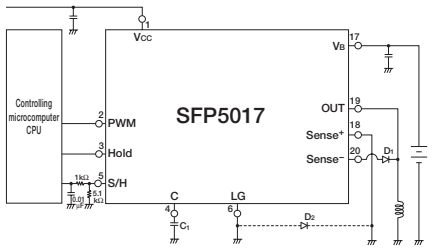

* Use a Schottky Di for D2 when the Sense+ terminal is lower than the abs. max. rated voltage (–0.8V)

Timing Chart

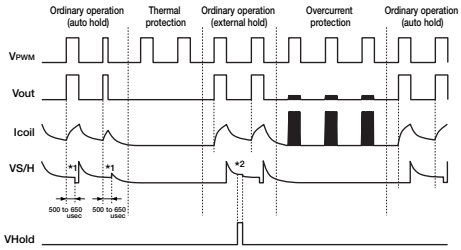

Truth table

V_{PWM}	L	H
V_{OUT}	L	H