Automotive Surface Mount Type Switching Regulator SPF8033J

■Features

- ●Output voltage: 3.3V±2%
  (VIN=14V,Io=0.5A,Tj=25℃)
- ●Possible to apply output current 1.5A (Ta=25℃)
  with compact HSOP16 package
- ●High efficiency 82% (Vin=14V, Io=0.5A)
- ●External components: 4 parts
- ●Built-in reference oscillator (125kHz)
- ●ON/OFF function of low current consumption at OFF

■Absolute maximum ratings

Characteristic	Symbol	Ratings	Units	Remarks
Input voltage	V_{IN}	35	V	
		40	V	Within 300ms
Power dissipation *2	P_D	1.6	W	Heat sink land pattern :1cm^2
Junction temperature	Tj	125	℃	
Storage temperature	Tstg	-40～125	℃	

■Recommended operating conditions

Characteristic	Symbol	Ratings	Units	Remarks
Input voltage range	V_{IN}	5.3～35	V	Io=0～1A
		6.3～35	V	Io=0～1.5A
Output current range	Io	0～1.5	A	VIN≧8V
Operating junction Temperature range	Tjop	-30～125	℃	
Operating temperature range	Top	-30～125	℃	

■Electrical characteristics (Tj=25℃)

Characteristic		Symbol	Limits MIN	Limits TYP	Limits MAX	Units	Test conditions
Output voltage		V_O	3.234	3.30	3.366	V	V_{IN}=14V, I_O=0.5A
Temperature coefficient *5		TC		±0.5		mV/℃	
Efficiency *6		η		77		%	V_{IN}=14V, I_O=0.5A
Operating frequency		fo	70	125	180	kHz	V_{IN}=14V, I_O=0.5A
Line regulation		VLine		25	80	mV	V_{IN}=8～30V, I_O=0.5A
Load regulation		VLoad		10	30	mV	V_{IN}=14V, I_O=0.2～0.8A
Quiescent current		Iq		7	12	mA	V_{IN}=14V, I_O=0A
Standby current		Iq(off)			200	μA	V_{IN}=14V $V_{ON/OFF}$=0.3V
Current Limit		Is	1.6			A	V_{IN}=14V
ON/OFF terminal	Shutdown voltage	V_{SSL}			0.5	V	
	Outflow current	I_{SSL}			100	μA	V_{SSL}=0V

■Package

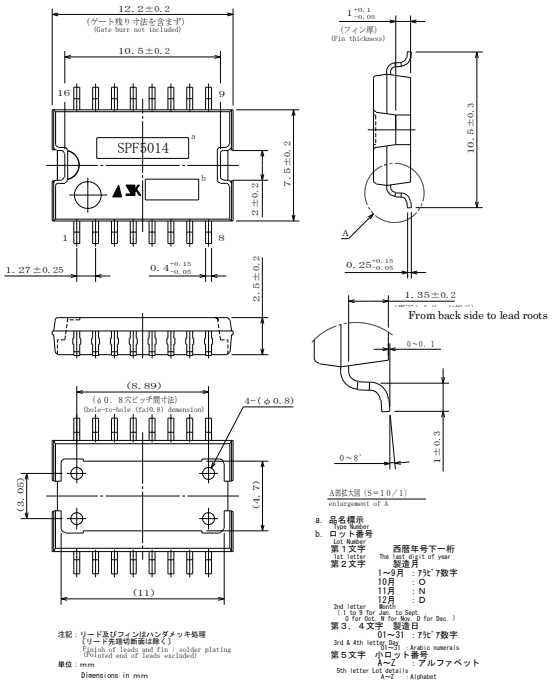
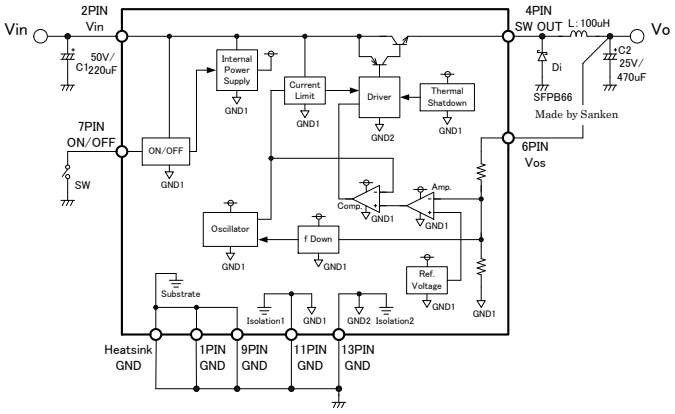
■Circuit block diagram