GENERAL DESCRIPTION

The SPX431A is a three-terminal adjustable shunt voltage regulator providing a highly accurate bandgap reference.

The SPX431A acts as an open-loop error amplifier with a 2.5V temperature compensation reference. The SPX431A has thermal stability, wide operating current of 150mA and broad temperature range of -40°C to 125°C, making it suitable for a variety of applications which require a low-cost, high performance solution. The SPX431A tolerance of 0.5% is proven to be sufficient to overcome all other errors in the system to virtually eliminate the need for trimming in the power supply manufacturer's assembly line and contribute a significant cost savings. The output voltage may be adjusted to any value between V_{REF} and 36 volts with two external resistors.

The SPX431A is available in RoHS compliant, lead free TO-92 and SOT89 packages.

APPLICATIONS

- **Charger**
- **Switching Power Supplies**
- **Graphic Cards**
- **Monitors, VCRs, TVs**

FEATURES

- **0.5% Precise Output Voltage**
  - Adjustable up to 36V
- **Wide Operating Current**
  - 1mA to 150mA
- **Low Temperature Coefficient at 30ppm/°C**
- **Extended Temperature Range**
  - -40°C to +125°C
- **Improved Replacment for TL431**
- **RoHS Compliant, Lead Free TO-92 and SOT-89 Packages**

TYPICAL APPLICATION DIAGRAM

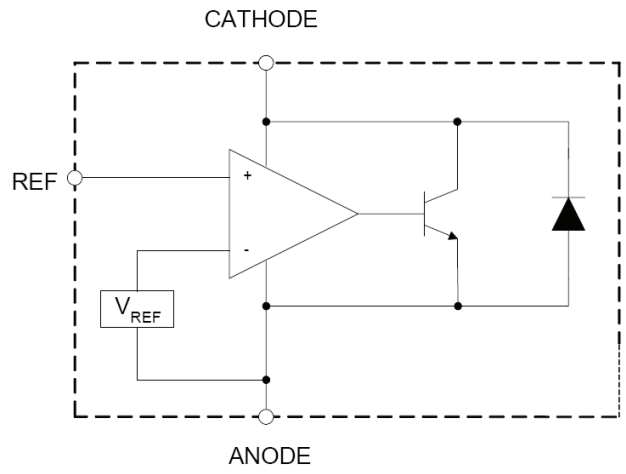

Fig. 1: SPX431A Application Diagram

ABSOLUTE MAXIMUM RATINGS

These are stress ratings only and functional operation of the device at these ratings or any other above those indicated in the operation sections of the specifications below is not implied. Exposure to absolute maximum rating conditions for extended periods of time may affect reliability.

Cathode-Anode Reverse Breakdown Volt. V_{KA} 37V
Operating Cathode Current (cont.) I_{KA} 150mA
Reference Input Current Range I_{REF} 10mA
Power Dissipation SOT-89-TO-92 (Cont. 25°C) P_D .. 770mW
Junction Temperature ..... 150°C
Storage Temperature T_{STG} ..... -65°C to 150°C
ESD Rating (HBM - Human Body Model) 2kV

OPERATING RATINGS

Cathode-Anode Reverse Breakdown Volt. V_{KA} 36V
Operating Cathode Current (cont.) I_{KA} ..... <100mA
Ambient Temperature Range ..... -40°C to 125°C

ELECTRICAL SPECIFICATIONS

Specifications with standard type are for an Operating Ambient Temperature of T_A = 25°C only; limits applying over the full Operating Ambient Temperature range are denoted by a "•". Minimum and Maximum limits are guaranteed through test, design, or statistical correlation. Typical values represent the most likely parametric norm at T_A = 25°C, and are provided for reference purposes only.

Parameter	Min.	Typ.	Max.	Units		Conditions
Reference Voltage	2.493	2.503	2.515	V		Test circuit 1 $V_{KA}=V_{REF}$, I_{KA}=10mA
ΔV_{REF} with temperature T_C		4.5	8	mV		Test circuit 1 $V_{KA}=V_{REF}$, I_{KA}=10mA, 0°C ≤ T_A ≤ 70°C
ΔV_{REF} with temperature T_C		4.5	16	mV	•	Test circuit 1 $V_{KA}=V_{REF}$, I_{KA}=10mA
Ratio of change in V_{REF} to Cathode Voltage ΔV_{REF} / ΔV_{KA}	-2.7	-1.0		mV/V		Test circuit 2 V_{REF} ≤ ΔV_{KA} ≤ 10V, I_{KA}=10mA
	-2	-0.4				Test circuit 2 10V ≤ ΔV_{KA} ≤ 36V, I_{KA}=10mA
Reference Input Current I_{REF}		0.7	4	µA		Test circuit 2 I_{KA}=10mA, R1=10kΩ, R2=∞
I_{REF} Temperature Deviation ΔI_{REF}		0.4	1.2	µA	•	Test circuit 2 I_{KA}=10mA, R1=10kΩ, R2=∞
Minimum I_{KA} for Regulation $I_{KA(MIN)}$		0.4	1	mA		Test circuit 1 $V_{KA}=V_{REF}$
Off State Leakage $I_{KA(OFF)}$		40	250	nA		Test circuit 3 V_{KA}=0, V_{REF}=36V
Dynamic Outout Impedance Z_{KA}		0.15	0.5	Ω		Test circuit 1 f_Z≤1KHz, I_{KA}=1 to 100mA

BLOCK DIAGRAM

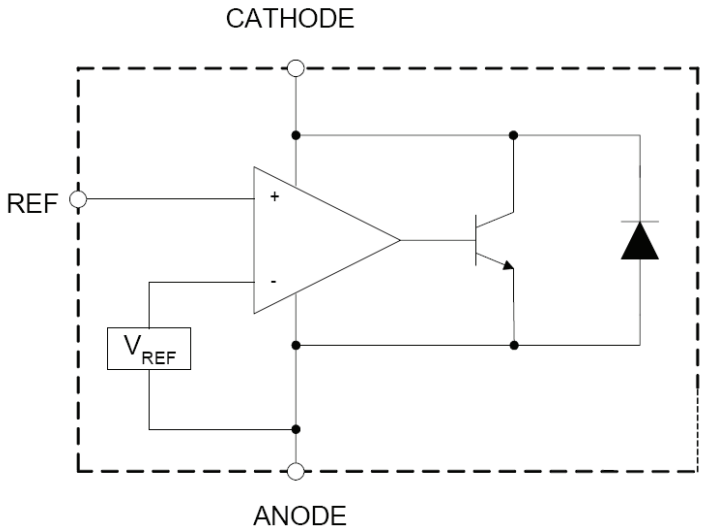

Fig. 2: SPX431A Block Diagram

PIN ASSIGNEMENT

3-pin TO-92 (N) 3-pin SOT89 (M1)

Fig. 3: SPX431A Pin Assignement

ORDERING INFORMATION

Part Number	Temperature Range	Marking	Package	Packing Quantity	Note 1	Note 2
SPX431AM1-L/TR	-40°C≤T_A≤+125°C		SOT89	2.5K/Tape & Reel	RoHS Compliant Lead Free	
SPX431AN-L/TR	-40°C≤T_A≤+125°C		TO-92	2K/Tape & Reel	RoHS Compliant Lead Free	Ammo Pack

"YY" = Year – "WW" = Work Week – "X" = Lot Number

TYPICAL PERFORMANCE CHARACTERISTICS

All data taken at T_A = 25°C, unless otherwise specified - Schematic and BOM from Application Information section of this datasheet.

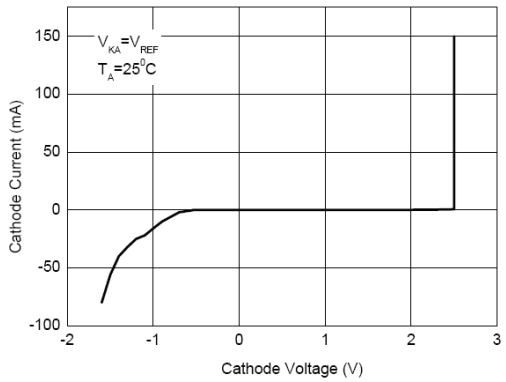

Fig. 4: Cathode Current vs Cathode Voltage

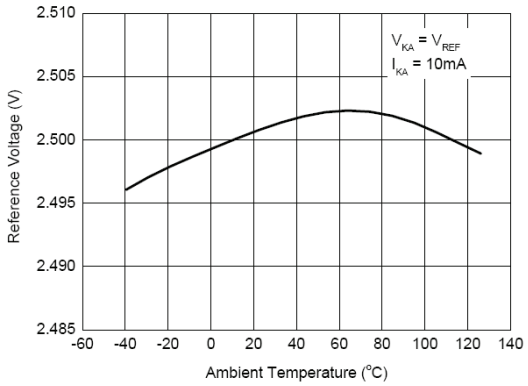

Fig. 5: Reference Voltage vs Ambient Temperature

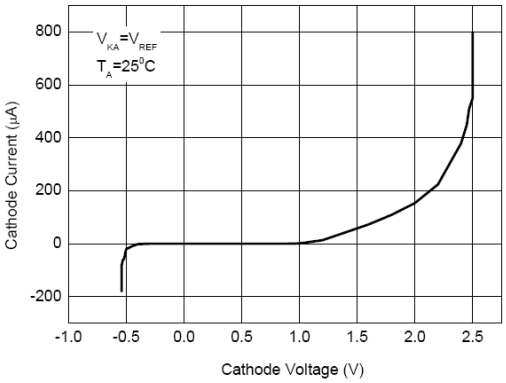

Fig. 6: Low Current Operating Characteristics

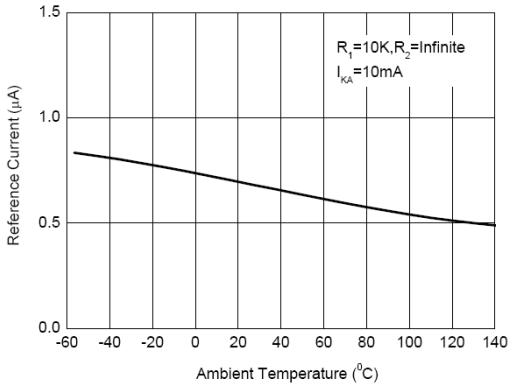

Fig. 7: Reference Input Current vs Ambient Temperature

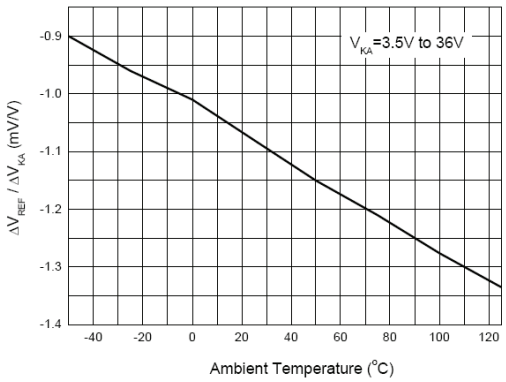

Fig. 8: ΔReference Voltage to ΔCathode Voltage Ratio

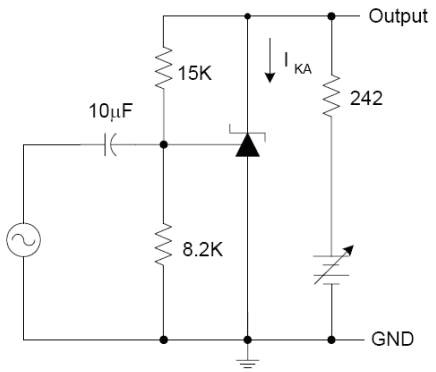

Fig. 9: Test Circuit for Gain vs Frequency Responce

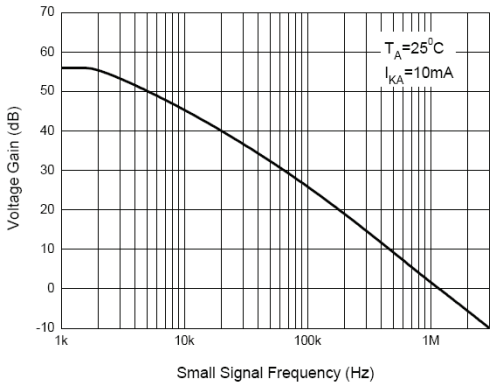

Fig. 10: Small Signal Gain vs Frequency

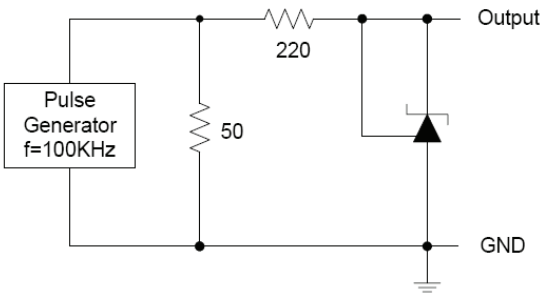

Fig. 11: Test Circuit for Pulse Response

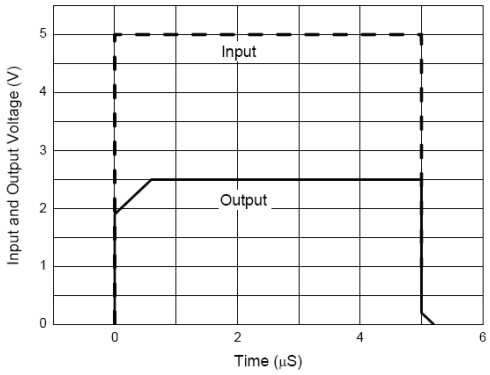

Fig. 12: Pulse Response

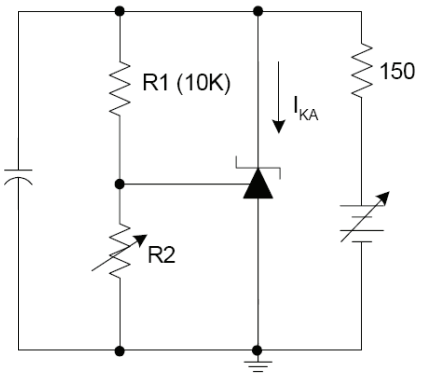

Fig. 13: Test Circuit for Stability

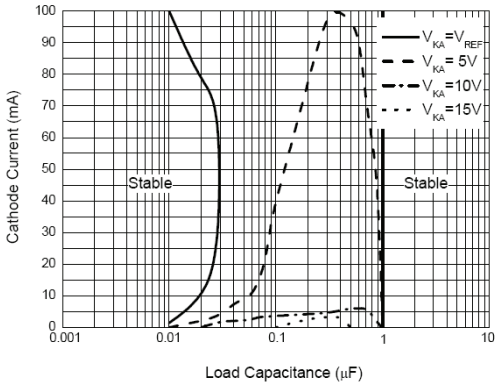

Fig. 14: Stability Boundary Conditions

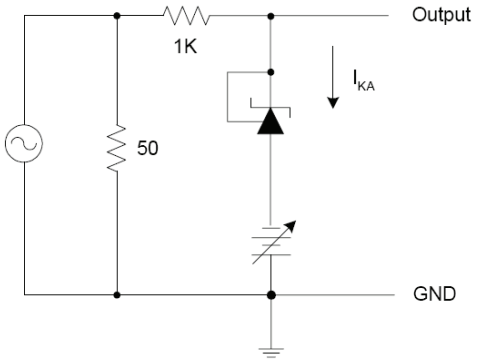

Fig. 15: Test Circuit for Dynamic Output Impedance

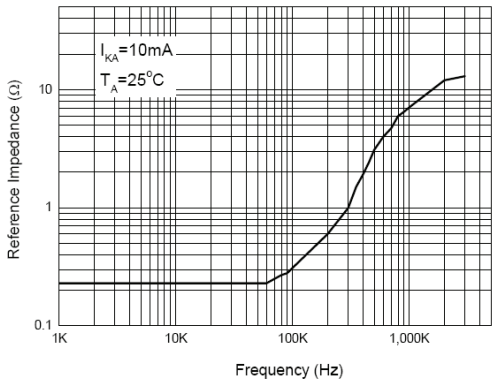

Fig. 16: Dynamic Output Impedance

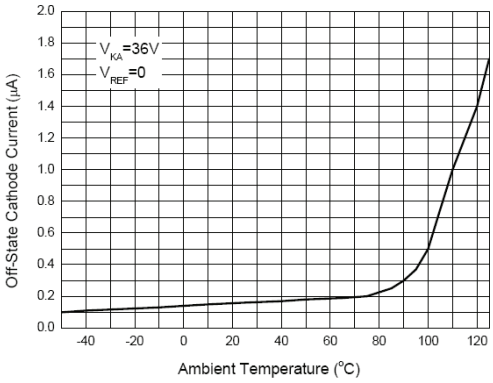

Fig. 17: Off State Leakage

TYPICAL APPLICATION SCHEMATICS

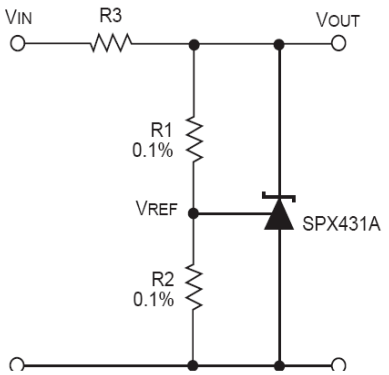

Fig. 18: Shunt Regulator $V_{OUT}=(1+R1/R2)V_{REF}$

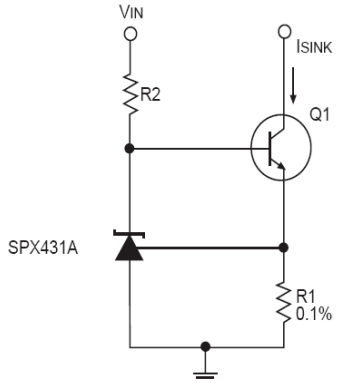

Fig. 19: Constant Current Sink $I_{SINK}=V_{REF}/R1$

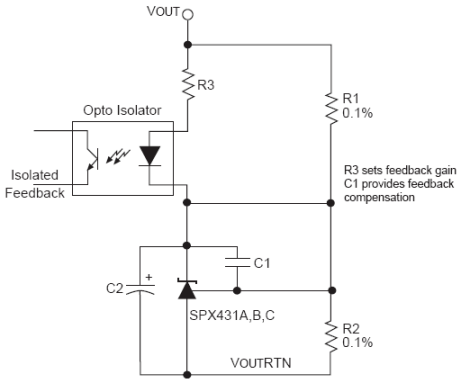

Fig. 20: Reference Amplifier for Isolated Feedback in Offline DC-DC Coinverters

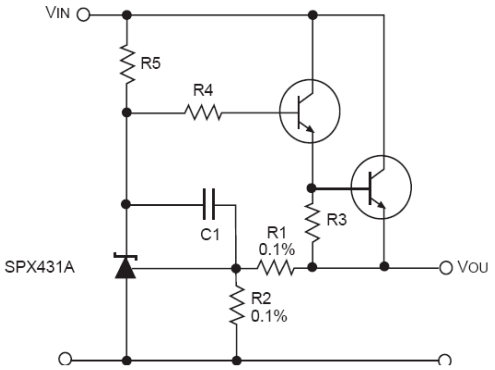

Fig. 21: Precision High Current Series Regulator $V_{OUT}=(1+R1/R2)V_{REF}$

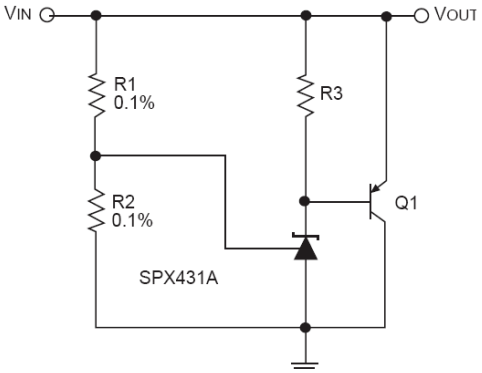

Fig. 22: High Current Shunt Regulator $V_{OUT}=(1+R1/R2)V_{REF}$

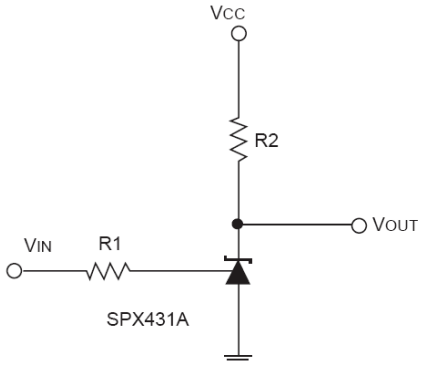

Fig. 23: Single Supply Comparator with Temperature Compensated Threshold

TEST CIRCUITS

TEST CIRCUIT 1

Test circuit for $V_{KA}=V_{REF}$

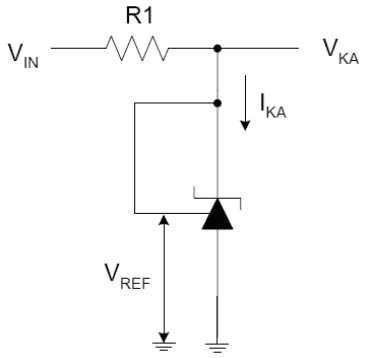

TEST CIRCUIT 2

Test circuit for $V_{KA} > V_{REF}$

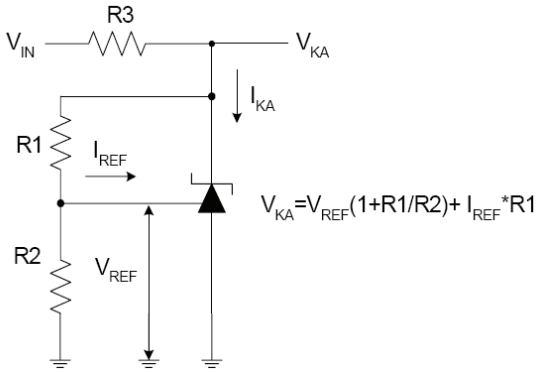

TEST CIRCUIT 3

Test circuit for I_{KOFF}

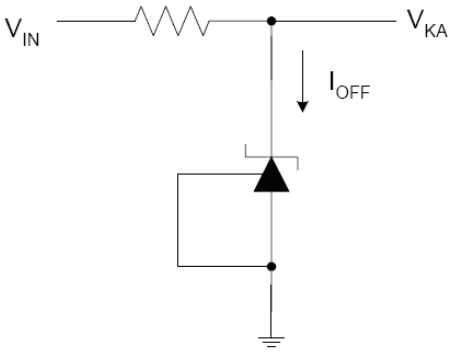

PACKAGE SPECIFICATION

SOT-89

Unit: mm (inch)

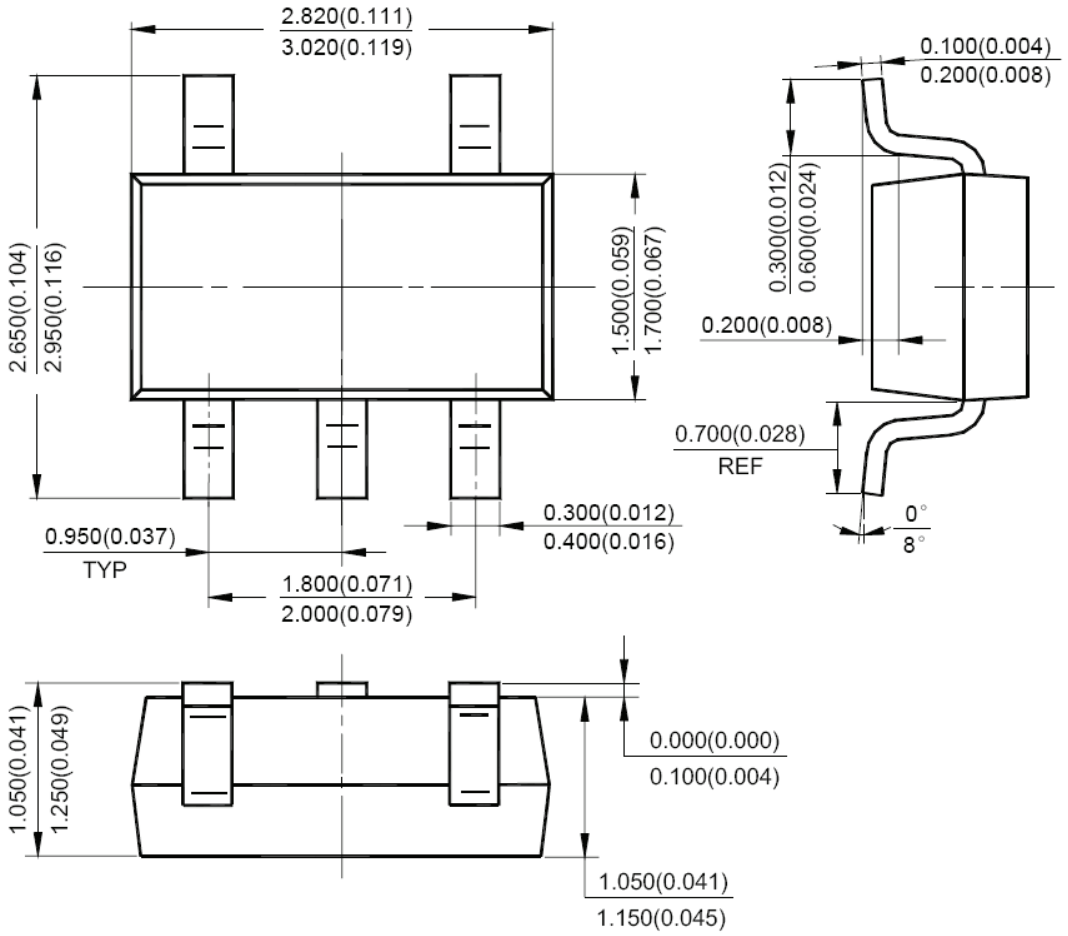

TO-92

Unit: mm (inch)

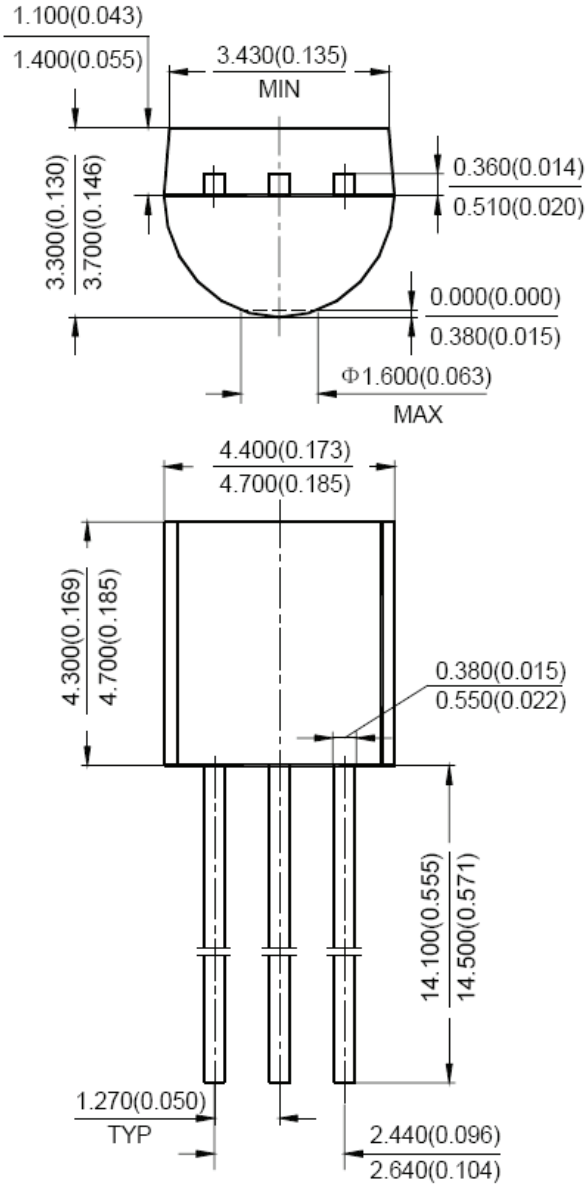

REVISION HISTORY

Revision	Date	Description
2.0.0	04/15/09	Reformat of Datasheet Updated ordering part numbers Updated application and block diagram

FOR FURTHER ASSISTANCE

Email: customersupport@exar.com

Exar Technical Documentation: http://www.exar.com/TechDoc/default.aspx?

EXAR CORPORATION

HEADQUARTERS AND SALES OFFICES

48720 Kato Road

Fremont, CA 94538 – USA

Tel.: +1 (510) 668-7000

Fax: +1 (510) 668-7030

www.exar.com

NOTICE

EXAR Corporation reserves the right to make changes to the products contained in this publication in order to improve design, performance or reliability. EXAR Corporation assumes no responsibility for the use of any circuits described herein, conveys no license under any patent or other right, and makes no representation that the circuits are free of patent infringement. Charts and schedules contained here in are only for illustration purposes and may vary depending upon a user's specific application. While the information in this publication has been carefully checked; no responsibility, however, is assumed for inaccuracies.

EXAR Corporation does not recommend the use of any of its products in life support applications where the failure or malfunction of the product can reasonably be expected to cause failure of the life support system or to significantly affect its safety or effectiveness. Products are not authorized for use in such applications unless EXAR Corporation receives, in writing, assurances to its satisfaction that: (a) the risk of injury or damage has been minimized; (b) the user assumes all such risks; (c) potential liability of EXAR Corporation is adequately protected under the circumstances.

Reproduction, in part or whole, without the prior written consent of EXAR Corporation is prohibited.