T4xx Series

- **Description:**

  High current density due to single mesa trchnology;
  SIPOS and Glass Passivation.

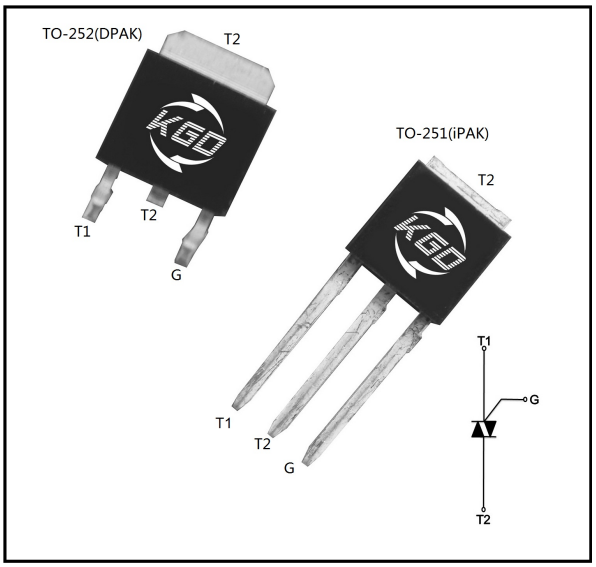

- **Applications:**
  T4XX series triacs is suitable for general purpose AC switching.
  They can be used as an ON/OFF function in applications such
  as static relays,heating regulation,induction motor stating circuits...
  or for phase contol operation light dimmers,motorspeed controllers.

- **Features:**
  T4XX are 3 Quandrants TRIACS, They are specially recommended
  for use on inductive loads.
  Blocking voltage to 600 & 800V
  On-state RMS current to 4A
  Non-repetitive peak on-state current to 35A

- **Absolute Maximum Ratings**

Symbol	Parameter	Conditions	Min	Max	Unit
V_{DRM}	Repetitive peak off-state voltage	T_J=25℃	600	800	V
$I_{T(RMS)}$	RMSon-statecurrent	Tc=105℃	-	4	A
I_{TSM}	Non-repetitive peak On-state current	F=50Hz, t=20ms	-	35	A
		F=60Hz, t=16.7ms	-	38	A
I^2t	I^2t for fusing	Tp=10ms	-	36	A^2S
di/dt	Rate of rise of on-state current	I_G=2×I_{GT},t_r≤100ns, T_j=125℃	-	50	A/μs
I_{GM}	Peak gate current	t_p=20μs, T_j=150℃	-	4	A
P_{GM}	Peak gate power		-	5	W
$P_{G(AV)}$	Average gate power		-	1	W
T_{STG}	Storage temperature		-40	150	℃
T_J	Junction temperature		-40	125	℃

Thermal Characteristics

Symbol	Parameter		Value	Unit
$R_{th(j-mb)}$	Junction to Case(AC)	DPAK/IPAK	2.6	℃/W
$R_{th(j-a)}$	Junction to am bient	DPAK/IPAK	60	℃/W

Electrical Characteristics

Symbol	Conditions	Quadrant		Numerical			Unit
				T405	T410	T435	
V_{TM}	I_T=5.5A,tp=380μs	T_J=25℃	MAX		1.6		V
I_{DRM} I_{RRM}	$V_D=V_{DRM}, V_R=V_{RRM}$	T_J=25℃	MAX		5.0		μA
		T_J=125℃	MAX		1.0		mA
I_{GT}	V_D=12V,R_L=33Ω	I-II-III	MAX	5	10	35	mA
V_{GT}		I-II-III	MAX		1.3		V
V_{GD}	$V_D=V_{DRM}$,R_L=3.3KΩ, T_j=150℃	I-II-III	MIN		0.2		V
I_L	$I_T=1.2I_{GT}$	I-III	MAX	10	25	50	mA
		II	MAX	15	30	60	mA
I_H	I_T=500mA		MAX	10	15	35	Ma
dv/dt	V_{DM}=67%V_{DRM},gate open,T_j=150℃		MIN	20	40	400	V/μs

Ordering Information

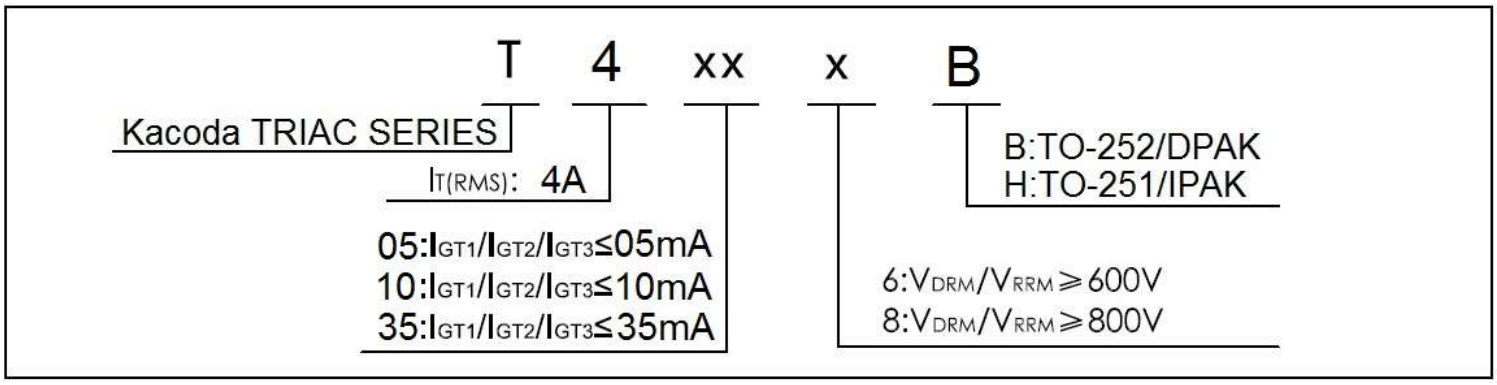

- **Package Outline Dimensions**

TO-252 / DPAK

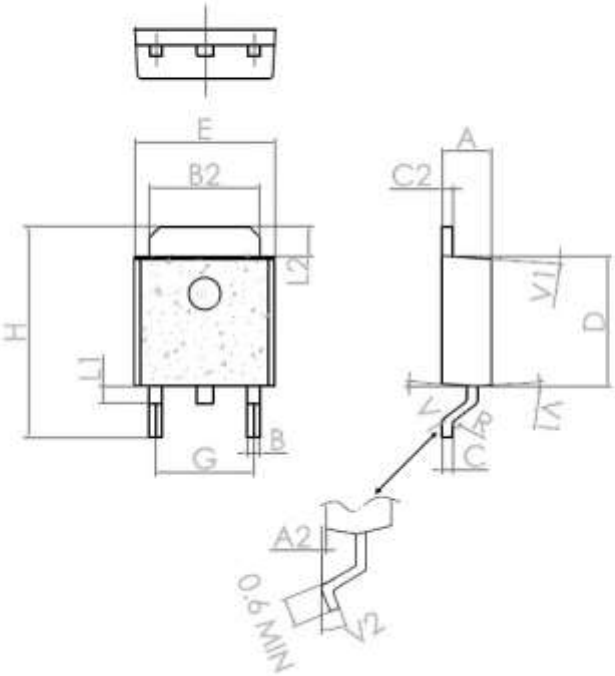

Ref.	Dimensions					
	Millimeters			Inches		
	Min.	Typ.	Max.	Min.	Typ.	Max.
A	2.2		2.4	0.086		0.095
A2	0.03		0.23	0.001		0.009
B	0.55		0.65	0.021		0.026
B2	5.2		5.4	0.204		0.212
C	0.45		0.62	0.017		0.024
C2	0.48		0.62	0.019		0.024
D	6		6.2	0.236		0.244
E	6.4		6.6	0.251		0.259
G	4.40		4.60	0.173		0.181
H	9.35		10.1	0.368		0.397
L1		0.8			0.031	
L2	1.37		1.5	0.054		0.059
V1		4°			4°	
V2	0°		8°	0°		8°

TO-251(iPAK)

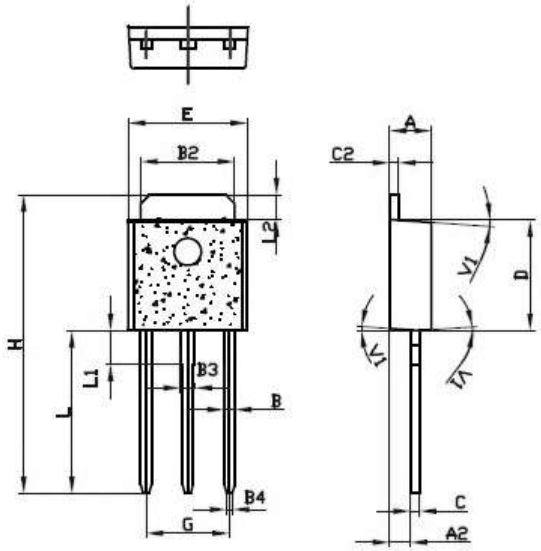

Ref.	Dimensions					
	Millimeters			Inches		
	Min.	Typ.	Max.	Min.	Typ.	Max.
A	2.2		2.4	0.086		0.095
A2	0.9		1.1	0.035		0.043
B	0.55		0.65	0.021		0.026
B2	5.1		5.4	0.200		0.212
B3	0.76		0.85	0.030		0.033
B4		0.32			0.013	
C	0.45		0.62	0.017		0.024
C2	0.48		0.62	0.019		0.024
D	6		6.2	0.236		0.244
E	6.4		6.7	0.252		0.264
G	4.4		4.7	0.173		0.185
H	16.0		16.7	0.630		0.658
L	8.9		9.4	0.350		0.370
L1	1.8		1.9	0.071		0.075
L2	1.37		1.5	0.054		0.059
V1		4°			4°	

FIG.1: Maximum power dissipation versus RMS on-state current(full cycle)

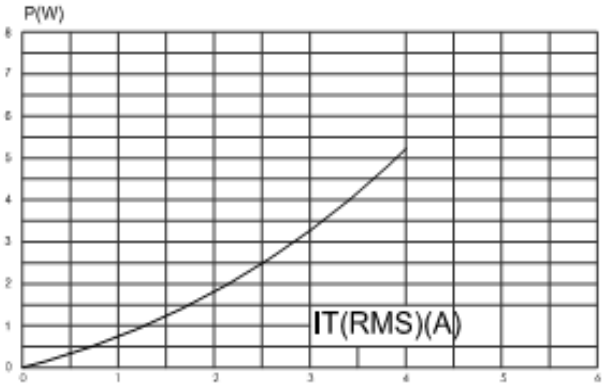

FIG.2: RMS on-state current versus case temperature(full cycle)

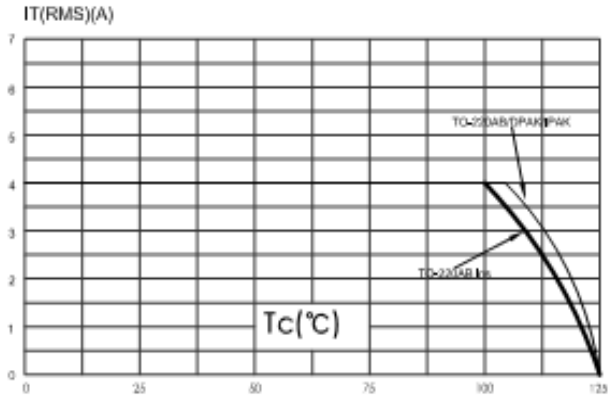

FIG.3: On-state characteristics (maximum values)

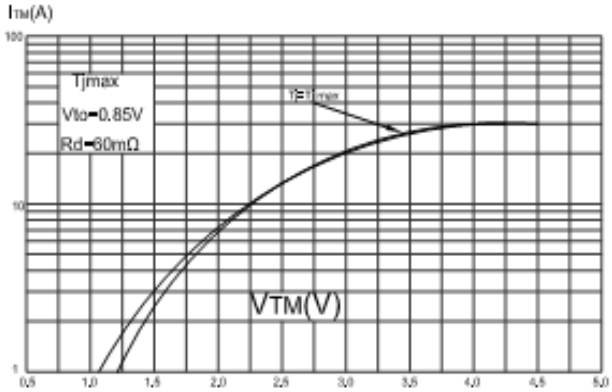

FIG.4: Surge peak on-state current versus number of cycles

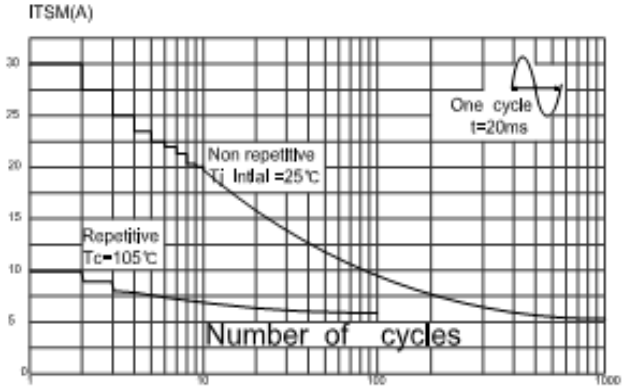

FIG.5: Non-repetitive surge peak on-state current for a sinusoidal pulse with width tp < 10ms.

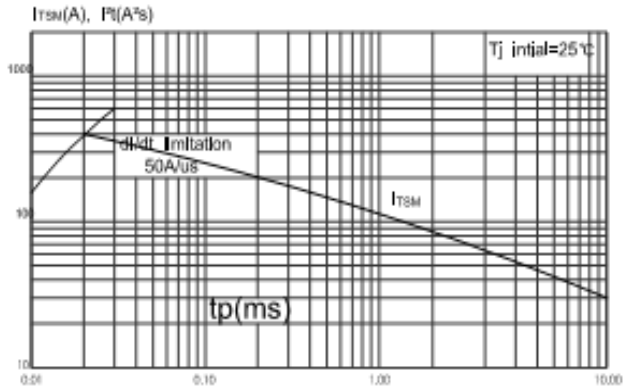
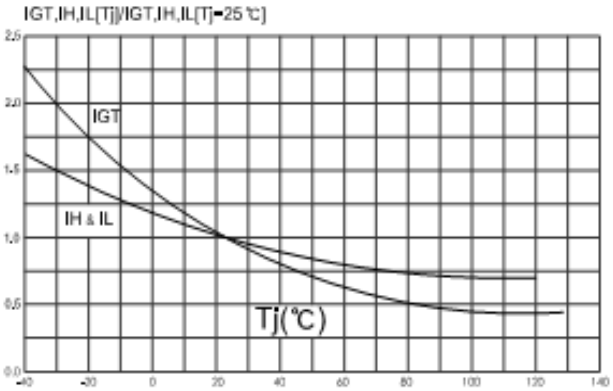
FIG.6: Relative variations of gate trigger current, holding current and latching current versus junction temperature(typical values)