LINEAR BUILDING BLOCK – QUAD LOW POWER COMPARATOR AND VOLTAGE REFERENCE WITH SHUTDOWN

FEATURES

- **Combines Two Comparators and a Voltage Reference into a Single Package**
- **Optimized for Single Supply Operation**
- **Small Package .....8-Pin MSOP (Occupies Half the Space of an 8-Pin SOIC)**
- **Ultra Low Input Bias Current ..... Less than 100pA**
- **Low Quiescent Current ..... 10µA Max**

APPLICATIONS

- **Power Supply Circuits**
- **Embedded Systems**
- **Instrumentation**
- **Portable Equipment**
- **Consumer Products**
- **Replacements for Discrete Components**

PIN CONFIGURATIONS

8-Pin MSOP

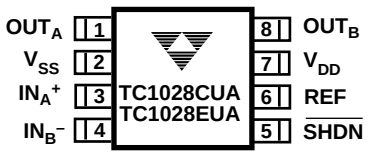

8-Pin Plastic DIP

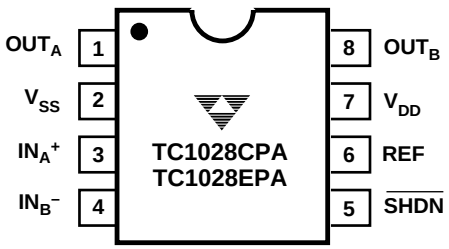

8-Pin SOIC

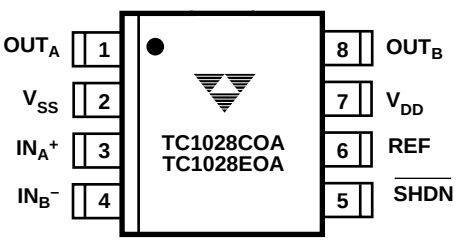

GENERAL DESCRIPTION

The TC1028 is a mixed-function device combining two general purpose, complimentary output comparators and a voltage reference in a single 8-pin package.

This increased integration allows the user to replace two packages, saving space, lowering supply current, and increasing system performance. The TC1028 operates down to V_{DD} = 1.8V and requires only 10µA of supply current. A Shutdown input ($\overline{SHDN}$) disables the comparators, placing their outputs in a high-impedance state. The reference stays active in Shutdown Mode. Standby power consumption is typically 1µA.

The TC1028 is designed specifically for operation from a single supply, however, operation from dual supplies is also possible, and the power supply current drain is independent of the magnitude of the power supply voltage.

Packaged in an 8-pin MSOP or 8-pin DIP, the TC1028 is ideal for applications requiring low power level detection.

ORDERING INFORMATION

Part No.	Package	Temp. Range
TC1028COA	8-Pin SOIC	– 40°C to +85°C
TC1028CPA	8-Pin Plastic DIP	0°C to +70°C
TC1028CUA	8-Pin MSOP	0°C to +70°C
TC1028EOA	8-Pin SOIC	– 40°C to +85°C
TC1028EPA	8-Pin Plastic DIP	– 40°C to +85°C
TC1028EUA	8-Pin MSOP	– 40°C to +85°C
TC43EV	***Evaluation Kit for Linear Building Block Family***	
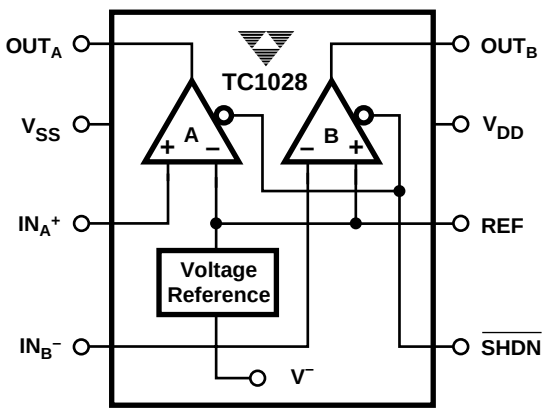
FUNCTIONAL BLOCK DIAGRAM