TC4002A

40CharsX2 Lines
1/16 Duty, 1/5Bias

External Dimension

http://www.oppod.com

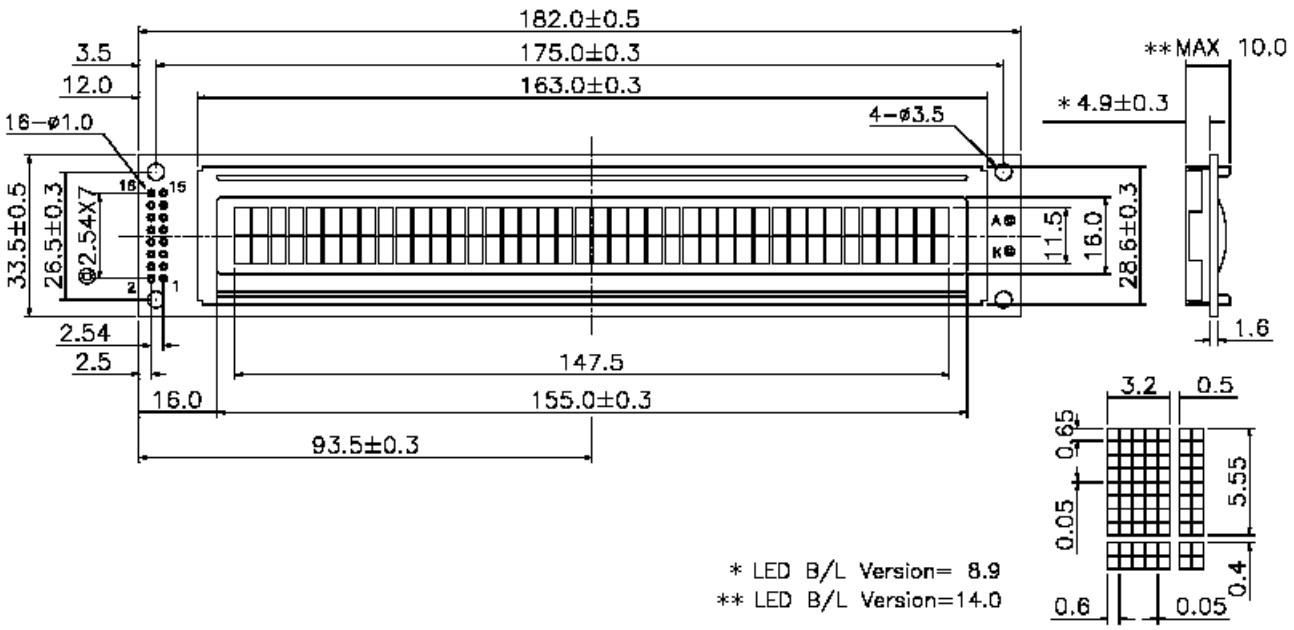

Mechanical Data

Item	Standard Value	Unit
Module size (W*H*T)	182.0*33.5*10.0/14.0	mm
View area (W*H)	155.0*16.0	mm
Active area (W*H)	147.5*11.5	mm
Dot size (W*H)	0.60*0.65	mm

Maximum Absolute Ratings

Item	Symbol	Value	Unit
Supply logic Volt.	V_{DD} -VSS	-0.3 ~ +7.0	V
LCD driving Volt.	V_{DD}-V0	-0.3 -13.0	V
Input Volt.	V_{in}	-0.3~ V_{DD} +0.3	V
Operating temp.	T_{OPR}	-20 ~ +70	℃
Storage temp.	T_{STG}	-30 ~ +80	℃

Electrical Characteristics (V_{DD} = 4.5V~5.5V)

Item	Symbol	Condition	Value	Unit
Supply logic Volt.	V_{DD}	—	5.0±0.5	V
Operating current	I_{DD}	V_{DD}=5.0V	2.0~5.0	mA
Input high volt.	V_{IH}	---	2.2~ V_{DD}	V
Input low volt.	V_{IL}	—	-0.3~0.6	V
Output high volt.	V_{oH}	I_{oH}=-0.2mA	2.4~ V_{DD}	V
Output low volt.	V_{oL}	I_{oL}=1.2mA	0~0.4	V
LCD driving volt.	V_{LCD}	T_A =25℃	4.6(Typ)	V

LED Backlight Characteristics (T_A =25℃)

Item	Symbol	Condition	Min	Typ	Max	Unit
Supply Volt.	Vf	---	---	4.1	4.3	V
Led Current	If	T_A =25℃	---	150	---	mA
Power Dissipation	Pd	---	----	650	---	mW

Interface Description

PIN	Symbol	Level	Description
1	V_{SS}	0V	Ground
2	V_{DD}	5.0V	Power supply for Logic
3	V_O	Variable	Driving voltage for LCD
4	RS	H/L	H:Data L :Instruction
5	RW	H/L	H:Read L:Write
6	E	H/L	Enable
7	DB0	H/L	In 8-bit mode, used as low order data bus. In 4-bit bus mode open these pins.
8	DB1	H/L	
9	DB2	H/L	
10	DB3	H/L	
11	DB4	H/L	In 8-bit mode, used as high data bus. In 4-bit mode, used as both high and low order. DB7 is used for Busy Flag .
12	DB5	H/L	
13	DB6	H/L	
14	DB7	H/L	
15	A	+5V	Anode of LED Backlight
16	K	0V	Cathode of LED Backlight
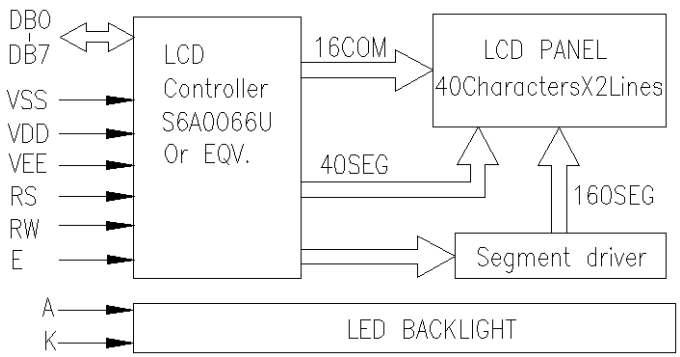
Block Diagram