SPEC.NO.	TQ3C-8EAF0-E1DDH27-00
DATE	August 30, 2007

FOR :

TYPE:TCG075VGLAF-G00

CONTENTS

1. Application
2. Construction and Outline
3. Mechanical Specifications
4. Absolute Maximum Ratings
5. Electrical Characteristics
6. Optical Characteristics
7. Interface Signals
8. Timing Characteristics of input signals
9. Backlight Characteristics
10. Design Guidance for Analog Touch-Panel(T/P)
11. Lot Number Identification
12. Warranty
13. Precautions for Use
14. Reliability Data/Environmental Test
15. Outline Drawing

Issued
Date: Sep.20,2007
KYOCERA
Hayato LCD Division

KYOCERA CORPORATION
KAGOSHIMA HAYATO PLANT
LCD DIVISION

This specification is subject to change.
Consult Kyocera before ordering.

Original	Designed by :Engineering Dept.			Confirmed by :QA Dept.	
Issue Date	Prepared	Checked	Approved	Checked	Approved
August 30, 2007	S. Kojima	M. Tokumori	Y. Matsumoto	T. Sakaguchi	

Warning

1. This Kyocera LCD module has been specifically designed for use only in electronic devices and industrial machines in the area of audio control, office automation, industrial control, home appliances, etc. The module should not be used in applications where the highest level of safety and reliability are required and module failure or malfunction of such module results in physical harm or loss of life, as well as enormous damage or loss. Such fields of applications include, without limitation, medical, aerospace, communications infrastructure, atomic energy control. Kyocera expressly disclaims any and all liability resulting in any way to the use of the module in such applications.

2. Customer agrees to indemnify, defend and hold Kyocera harmless from and against any and all actions, claims, damages, liabilities, awards, costs and expenses, including legal expenses, resulting from or arising out of Customer's use, or sale for use, or Kyocera modules in applications.

Caution

1. Kyocera shall have the right, which Customer hereby acknowledges, to immediately scrap or destroy tooling for Kyocera modules for which no Purchase Orders have been received from the Customer in a two-year period.

Revision Record

Date	Designed by: Engineering Dept.			Confirmed by: QA Dept.	
	Prepared	Checked	Approved	Checked	Approved

Rev. No.	Date	Page	Descriptions

1. Application

This data sheet defines the specification for a 640×(R.G.B)×480 dot, amorphous silicon TFT transmissive color dot matrix type Liquid Crystal Display with LED backlight. 『RoHS Compliant』

2. Construction and Outline

640×(R.G.B)×480 dots, COG type LCD with LED backlight.

Backlight system : Side-edge type (LED).

Polarizer : Glare treatment.

Additional circuits : Timing controller, Power supply (3.3V input)
(Without constant current circuit)

Touch Panel : Analog type. Non-Grare treatment.

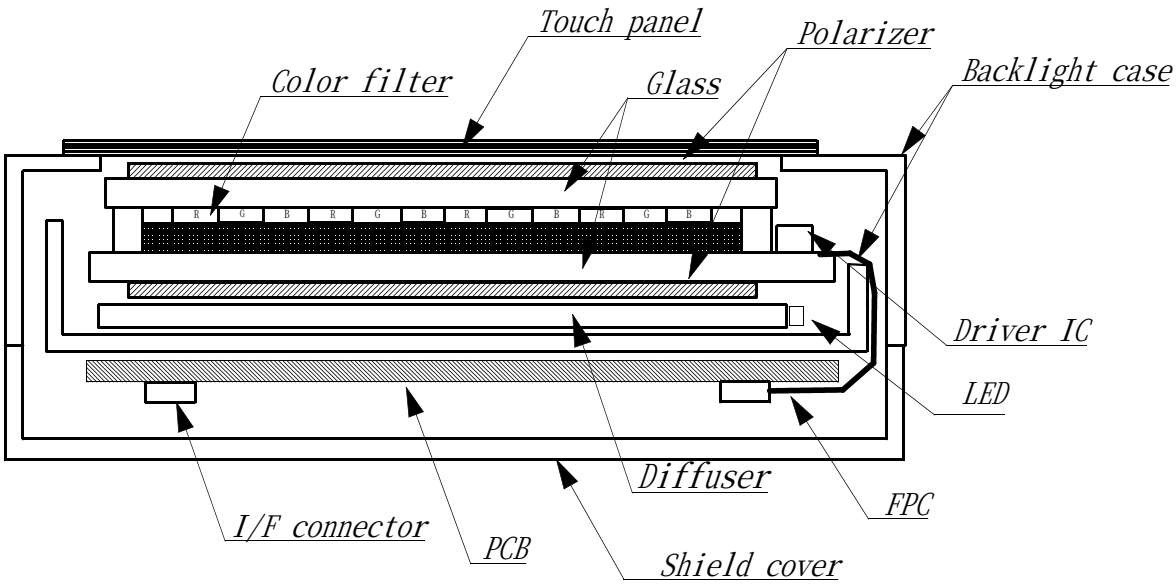

This drawing is showing conception only.

3. Mechanical Specifications

3-1. LCD

ITEM	SPECIFICATION	UNIT
Outline dimensions	184 (W) × 139.8 (H) × 14.5 (D)	mm
Effective viewing area	153.7 (W) × 115.8 (H)	mm
Dot number	640×(R.G.B) (W) × 480 (H)	Dots
Dot pitch	0.079 (W) × 0.237 (H)	mm
Display mode *1	Normally white	—
Mass	(440)	g

*1 Due to the characteristics of the LCD material, the color vary with environmental temperature.

3-2. Mechanical Specifications of touch panel

ITEM	SPECIFICATION	UNIT
Input	Radius-0.8 stylus or Finger	—
Actuation Force	0.05～0.8	N
Transmittance	Typ.83	%
Surface hardness	pencil hardness 2H or more according	—

4. Absolute Maximum Ratings

4-1. Electrical absolute maximum ratings

ITEM	SYMBOL	Min.	Max.	UNIT
Power input voltage	VDD	0	4.0	V
Input signal voltage *1	Vin	-0.3	6.0	V
Forward current *2	IF	—	27	mA
Reversed voltage *2	VR	—	5	V
Touch panel supply voltage	Vtp	0	6.0	V
Touch panel Input current	Itp	0	0.5	mA

*1 Input signals : CK, R0～R5, G0～G5, B0～B5, Hsync, Vsync, ENAB, R/L, U/D
*2 For each : "AN1-CA1", "AN2-CA2", "AN3-CA3", "AN4-CA4"

4-2. Environmental absolute maximum ratings

ITEM	SYMBOL	Min.	Max.	UNIT
Operating temperature *1	Top	-20	70	deg.C
Storage temperature *2	Tsto	-30	80	deg.C
Operating humidity *3	Hop	10	*4	%RH
Storage humidity *3	Hsto	10	*4	%RH
Vibration	—	*5	*5	—
Shock	—	*6	*6	—

*1 Operating temperature means a temperature which operation shall be guaranteed.
Since display performance is evaluated at 25 deg.C, another temperature range should be confirmed.

*2 Temp. = -30 °C < 48 h , Temp = 80 °C < 168 h
Store LCD panel at normal temperature/humidity.
Keep it free from vibration and shock.
LCD panel that is kept at low or high temperature for a long time can be defective due to the other conditions, even if the temperature satisfies standard.
(Please refers to 13. Precautions for use as detail).

*3 Non-condensation.

*4 Temp. ≦ 40 deg.C, 85%RH Max.
Temp. > 40 deg.C, Absolute Humidity shall be less than 85% RH at 40 deg.C.

*5

Frequency	10～55 Hz	Converted to acceleration value : (0.3～9 m/s^2)
Vibration width	0.15 mm	
Interval	10-55-10 Hz 1 minute	

2 hours in each direction X/Y/Z (6 hours as total)
EIAJ ED-2531

*6 Acceleration: 490m/s^2
Pulse width : 11 ms
3 times in each direction : ±X/±Y/±Z.
EIAJ ED-2531

5. Electrical Characteristics

5-1. LCD

Temp. = -20～70°C

ITEM		SYMBOL	MIN	TYP	MAX	UNIT
Power input voltage *1		VDD	3.0	3.3	3.6	V
Current consumption *2	VDD=3.3V Temp.=25°C	IDD	—	290	435	mA
Permissive input ripple voltage(VDD=3.3V)		VRP	—	—	100	mVp-p
Input signal voltage (Low) *3		VIL	0	—	0.3VDD	V
Input signal voltage (High) *3		VIH	0.7VDD	—	VDD	V

*1 VDD-turn-on conditions

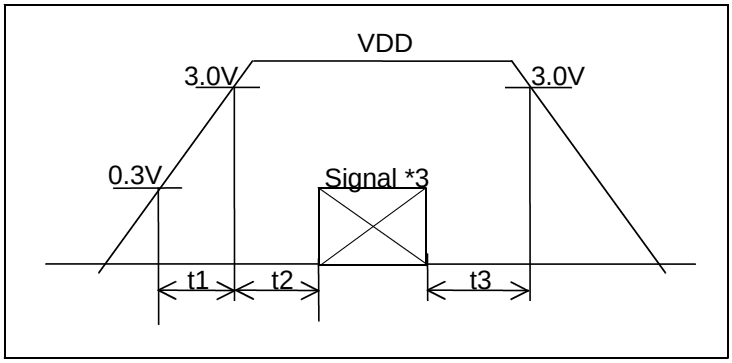

$0 < t1 \leqq 20ms$

$0 < t2 \leqq 50ms$

$0 < t3 \leqq 1s$

*2 Power consumption
Black & White pattern :

VDD = 3.3V

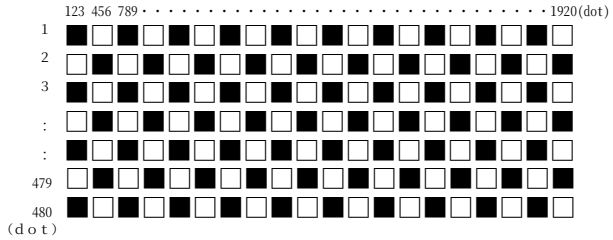

*3 Input signals : CK, R0～R5, G0～G5, B0～B5, Hsync, Vsync, ENAB, R/L, U/D

5-2. Touch Panel

5-2-1. Terminal resistance
Between xL and xR : 200 ～ 1000 Ω
Between yU and yL : 200 ～ 1000 Ω

5-2-2. Linearity
±1.5% x : 1.5% or less
y : 1.5% or less

5-2-3. Insulation resistance
100MΩ or more at DC25V

6. Optical Characteristics

Measuring points = φ6.0mm , Temp. = 25°C

ITEM		SYMBOL	CONDITION		MIN	TYP	MAX	UNIT
Response time	Rise	τr	θ=φ=0°		—	5	—	ms
	Down	τd	θ=φ=0°		—	15	—	ms
Viewing angle range		θ	CR≧5	Upper	—	50	—	deg.
				Lower	—	70	—	
		φ		Left	—	70	—	deg.
				Right	—	70	—	
Contrast ratio		CR	θ=φ=0°		300	450	—	—
Brightness			IF=(25mA)/1LED Line		(170)	(220)	—	cd/m²
Chromaticity coordinates	Red	x	θ=φ=0°		(0.54)	(0.59)	(0.64)	—
		y			(0.31)	(0.36)	(0.41)	
	Green	x	θ=φ=0°		(0.29)	(0.34)	(0.39)	
		y			(0.52)	(0.57)	(0.62)	
	Blue	x	θ=φ=0°		(0.10)	(0.15)	(0.20)	
		y			(0.09)	(0.14)	(0.19)	
	White	x	θ=φ=0°		(0.28)	(0.33)	(0.38)	
		y			(0.30)	(0.35)	(0.40)	

6-1. Contrast ratio is defined as follows:

$$CR = \frac{\text{Brightness at all pixels "White"}}{\text{Brightness at all pixels "Black"}}$$

6-2. Definition of response time

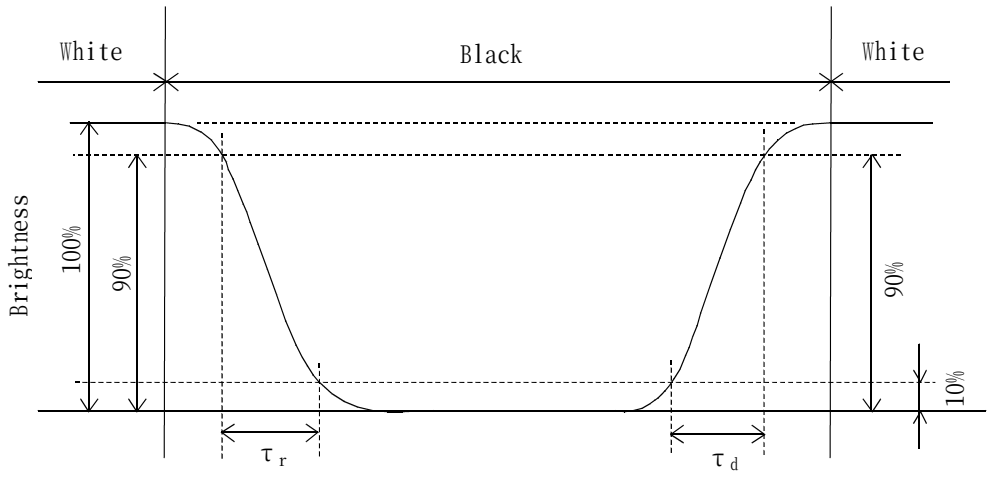

6-3. Definition of viewing angle

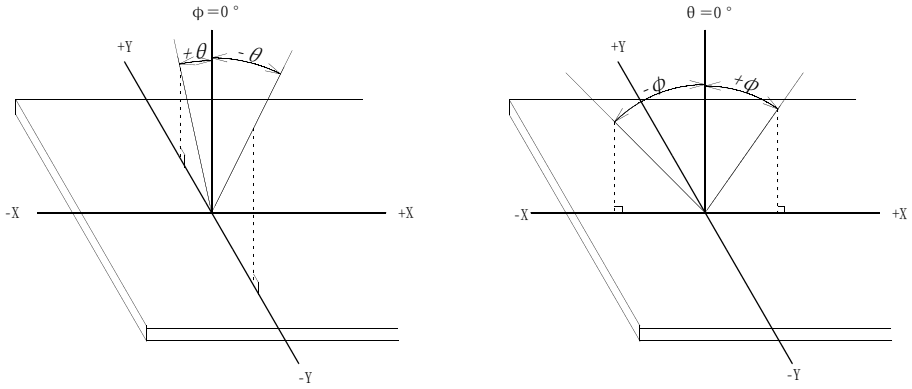

(θ direction)　　(φ direction)

6-4. Measuring points

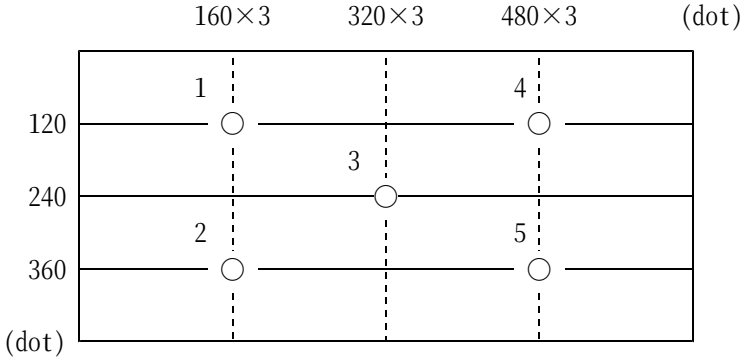

1) Rating is defined as the average brightness inside the viewing area.
2) 30 minutes after LED is turned on. (Ambient Temp.=25°C)
3) Backlight : IF=25mA / 1 LED line

7. Interface signals

7-1. LCD

PIN NO.	SYMBOL	DESCRIPTION	I/O	Note
1	GND	GND	-	
2	CK	Clock signal for sampling each data signal	I	
3	Hsync	Horizontal synchronous signal (negative)	I	
4	Vsync	Vertical synchronous signal (negative)	I	
5	GND	GND	-	
6	R0	RED data signal (LSB)	I	
7	R1	RED data signal	I	
8	R2	RED data signal	I	
9	R3	RED data signal	I	
10	R4	RED data signal	I	
11	R5	RED data signal (MSB)	I	
12	GND	GND	-	
13	G0	GREEN data signal (LSB)	I	
14	G1	GREEN data signal	I	
15	G2	GREEN data signal	I	
16	G3	GREEN data signal	I	
17	G4	GREEN data signal	I	
18	G5	GREEN data signal (MSB)	I	
19	GND	GND	-	
20	B0	BLUE data signal (LSB)	I	
21	B1	BLUE data signal	I	
22	B2	BLUE data signal	I	
23	B3	BLUE data signal	I	
24	B4	BLUE data signal	I	
25	B5	BLUE data signal (MSB)	I	
26	GND	GND	-	
27	ENAB	Signal to settle the horizontal display position (positive)	I	*1
28	VDD	3.3V power supply	-	
29	VDD	3.3V power supply	-	
30	R/L	Horizontal display mode select signal L : Normal , H : Left / Right reverse mode	I	*2
31	U/D	Vertical display mode select signal H : Normal , L : Up / Down reverse mode	I	*2
32	NC	No connect	-	
33	GND	GND	-	

LCD side connector : 08-6210-033-340-800+ (ELCO)
Recommended matching FFC or FPC : P = 0.5mm

*1 The horizontal display start timing is settled in accordance with a rising timing of ENAB signal.
In case ENAB is fixed "Low", the horizontal start timing is determined as described in 8-2.
Don't keep ENAB "High" during operation.

*2

R/L = L
U/D = H

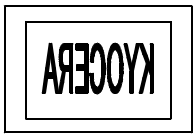

R/L = H
U/D = H

R/L = L
U/D = L

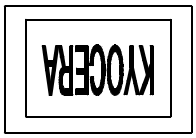

R/L = H
U/D = L

7-2. LED

PIN NO.	SYMBOL	DESCRIPTION
1	AN1	Anode1
2	AN2	Anode2
3	AN3	Anode3
4	AN4	Anode4
5	CA1	Cathode1
6	CA2	Cathode2
7	CA3	Cathode3
8	CA4	Cathode4

LCD side connector : SHLP-08V-S-B (JST)
Recommended matching connector : SM08B-SHLS-TF (JST)
: SM08B-SHLS-TF(LF)(SN) (JST)···(RoHS Compliant)

7-3. Touch panel

PIN No.	SYMBOL	DESCRIPTION
1	yU	y-Upper terminal
2	xL	x-Left terminal
3	yL	y-Lower terminal
4	xR	x-Right terminal

8. Timing Characteristics of input signals

8-1. Timing characteristics

ITEM		SYMBOL	MIN	TYP	MAX	UNIT	NOTE
Clock	Frequency	1/Tc	—	25.18	28.33	MHz	
	Duty ratio	Tch/Tc	40	50	60	%	
Data	Set up time	Tds	5	—	—	ns	
	Hold time	Tdh	10	—	—	ns	
Horizontal sync. signal	Cycle	TH	30.0	31.8	—	μs	
			770	800	900	clock	
	Pulse width	THp	2	96	200	clock	
Vertical sync. signal	Cycle	TV	515	525	560	line	
	Pulse width	TVp	2	—	34	line	
Horizontal display period		THd	640			clock	
Hsync.-Clock phase difference		THc	10	—	Tc-10	ns	
Hsync.-Vsync. phase difference		TVh	0	—	TH-THp	ns	
Vertical sync.signal start position		TVs	34			line	
Vertical display period		TVd	480			line	

* In case of lower frequency, the deterioration of the display quality, flicker etc., may occur.

8-2. Horizontal display position
The horizontal display position is determined by ENAB signal.

ITEM		SYMBOL	MIN	TYP	MAX	UNIT	NOTE
Enable signal	Set up time	Tes	5	—	Tc-10	ns	
	Pulse width	Tep	2	640	TH-10	clock	
Hsync.-Enable signal phase difference		The	44	—	TH-664	clock	

*When ENAB is fixed at "Low," the display starts from the data of C104(clock) as shown in 8-5.

8-3. Vertical display position
The vertical display position (TVs) is fixed at 34th line.
Note) ENAB signal is independent of vertical display position.

8-4. Input Data Signals and Display position on the screen

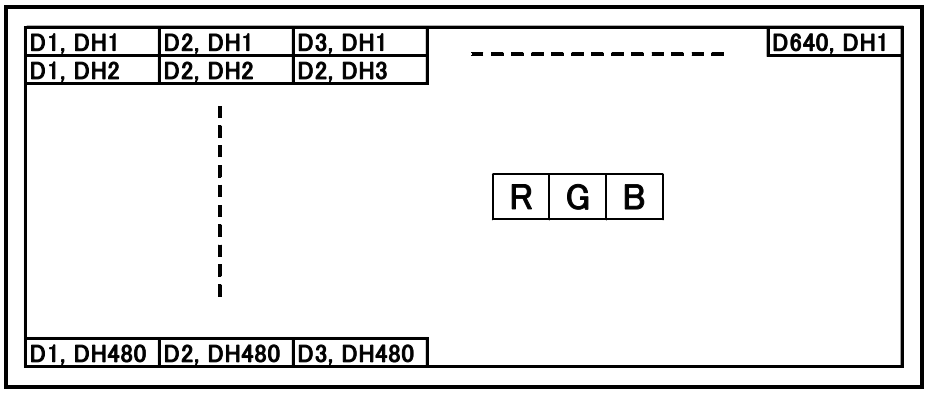

8-5. Input Timing Characteristics

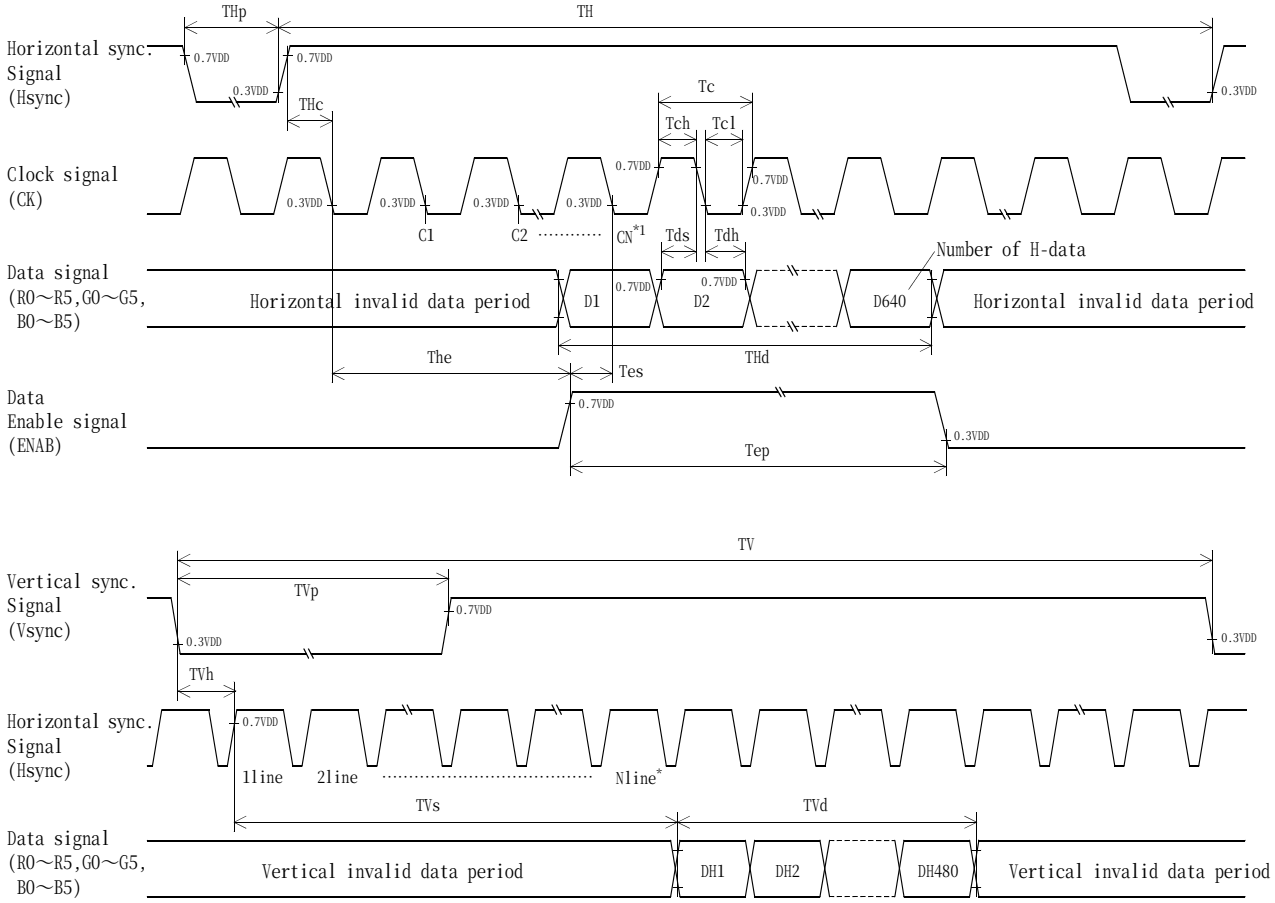

*1 When ENAB is fixed "Low" the display starts from the data of C104(Clock).

*2 The vertical display position(TVs) is fixed at 34th line.

9. Backlight Characteristics

Temp. = 25°C

ITEM		SYMBOL	MIN.	TYP.	MAX.	UNIT	NOTE
Forward current	*1	IF	—	(25)	—	mA	Top=-20～70°C
Forward voltage	*1	VF	—	(24.5)	(27.3)	V	IF=25mA, Top=-10°C
			—	(23.1)	(25.9)	V	IF=25mA, Top=25°C
			—	(22.1)	(24.9)	V	IF=25mA, Top=70°C
Operating life	*2	T	—	(50,000) *3	—	V	IF=25mA

*1 For each "AN1-CA1", "AN2-CA2", "AN3-CA3" and "AN4-CA4",

*2 When brightness decrease 50% of initial brightness.

*3 Life time is estimated data.

* An input current below 8.0mA may reduce the brightness uniformity of the LED backlight. This is because the amount of light from each LED chip is different. Therefore, please evaluate carefully before finalizing the input current.

10. Design Guidance for Analog Touch-Panel(T/P)

10-1. Electrical
In customer's design, please remember the following considerations.

1. Do not use the current regulated circuit.
2. Keep the current limit with top and bottom layer.(See Sec, 4-1)
3. Analog T/P can not sense two point touching separately.
4. A contact resistance is appeared at the touch point between top and bottom layer.
   After this resistance has stable read the T/P position data.
5. Analog T/P is also a "Capacitor" in an equivalent circuit.
   Design your sensing circuit and low-pass filter with considering this "Capacitor" value.
6. Because noise of inverter or peripheral circuits may interfere signal of touch panel itself
   it is necessary to design carefully in advance to avoid these noise problem.

10-2. Software
1. Do the "User Calibration".
2. "User Calibration" may be needed with long term using.
   Include "User Calibration" menu in your software.
3. When drawing a line with a stylus, there may be a slight discontinuity when the stylus passes
   over a spacer-dot. If necessary, please provide a compensation feature within your software.

10-3. Mounting on display and housing bezel
1. Do not use an adhesive tape to bond it on the front of T/P and hang it to the housing bezel.
2. Never expand the T/P top layer (PET-film) like a balloon by internal air pressure.
   The life of the T/P will be extremely short.
3. If a dew will be on the heat-sealed area or exposed traces at the end of a flexible tail,
   the migration of silver can occur.
   This will cause sometimes a short circuit.

11. Lot Number Identification

The lot number shall be indicated on the back of the backlight case of each LCD.

TCG075VGLAF−G00 − □ □−□ □ − □ MADE IN □□□□□
① ② ③ ④ ⑤

①YEAR
②MONTH
③DATE
④Version Number
⑤Country of origin(Japan or China)

YEAR	2007	2008	2009	2010	2011	2012
CODE	7	8	9	0	1	2

MONTH	JAN.	FEB.	MAR.	APR.	MAY.	JUN.
CODE	1	2	3	4	5	6

MONTH	JUL.	AUG.	SEP.	OCT.	NOV.	DEC.
CODE	7	8	9	X	Y	Z

12. Warranty

12-1. Incoming inspection

Please inspect the LCD within one month after your receipt.

12-2. Production Warranty

Kyocera warrants its LCDs for a period of 12 months after receipt by the purchaser, and within the limits specified. Kyocera shall, by mutual agreement, replace or rework defective LCDs that are shown to be Kyocera's responsibility.

13. Precautions for use

13-1. Installation of the LCD

1. The LCD's bezel must be grounded. The heat sink and shield cover are connected at the ground hole. The ground hole is located on the right side of the LCD when viewed from the front. The ground hole must be connected to an external ground.
2. The LCD shall be installed so that there is no pressure on the LSI chips.
3. The LCD shall be installed flat, without twisting or bending.
4. Please design the housing window so that its edges are between the active area and the effective area of the LCD screen.
   Must maintain a gap between inside of bezel and touch panel to avoid malfunction or electrode damage of touch panel.
5. In case you use outside frame of effective viewing area as outward appearance of your product, unevenness of its outward appearance is out of guarantee.
6. Please refer to the following our recommendable value of Clamp-down torque when installing.
   Clamp-down torque : 0.32±0.03N·m
   Please set up'SPEED-LOW,' 'SOFT START-SLOW' when using electric driver.
   Recommendable screw P-TITE screw two types nominal dia.3.0 mm installing boss hole depth 4.2 mm Max
   Please be careful not to use high torque which may damage LCD module in installation.
7. Do not pull the LED lead wires and do not bend the root of the wires.
   Housing should be designed to protect LED lead wires from external stress.
8. This Kyocera LCD module has been specifically designed for use in general electronic devices, but not for use in a special environment such as usage in an active gas.
   Hence, when the LCD is supposed to be used in a special environment, evaluate the LCD thoroughly beforehand and do not expose the LCD to chemicals such as an active gas.

13-2. Static Electricity

1. Since CMOS ICs are mounted directly onto the LCD glass, protection from static electricity is required. Operator should wear ground straps.

13-3. LCD Operation

1. The LCD shall be operated within the limits specified. Operation at values outside of these limits may shorten life, and/or harm display images.
2. Operation of the LCD at temperature below the limit specified may cause image degradation and/or bubbles.
   It may also change the characteristics of the liquid crystal.
   This phenomenon may not recover. The LCD shall be operated within the temperature limits specified.

13-4. Storage

1. The LCD shall be stored within normal temperature and humidity.
   Store in a dark area, and protected the LCD from direct sunlight or fluorescent light.
2. Always store the LCD so that it is free from external pressure onto it.

13-5. Screen Surface

1. DO NOT store in a high humidity environment for extended periods.
   Image degradation, bubbles, and/or peeling off of polarizer may result.
2. Do not push or rub the touch panel's surface with hard to sharp objects such as knives, or the touch panel may be scratched.
3. When the touch panel is dirty, gently wipe the surface with a soft cloth, sometimes moistened by mild detergent or alcohol. If a hazardous chemical is dropped on the touch panel by mistake, wipe it off right away to prevent human contact.
4. Touch panel edges are sharp. Handle the touch panel with enough care to prevent cuts.
5. Always keep the LCD free from condensation during testing.
   Condensation may permanently spot or stain the polarizers.
6. Do not disassemble LCD module because it will result in damage.
7. Please do not use solid-base image pattern for long hours because a temporary afterimage may appear. We recommend to use screen saver etc. in cases where a solid-base image pattern must be used.
8. Liquid crystal may leak when the module is broken. Be careful not to let the fluid go into your eyes and mouth. In the case the fluid touches your body, rinse it off right away with water and soap.

14. Reliability Data / Environmental Test

TEST ITEM	TEST CONDITION	TEST TIME	RESULT
High Temp. Atmosphere	80°C	240 h	Display Quality : No defect Display Function : No defect Current Consumption : No defect
Low Temp. Atmosphere	-30°C	240 h	Low Temp. Bubble : None Solid Crystallization of Liquid Crystal : None Display Quality : No defect Display Function : No defect Current Consumption : No defect
High Temp. Humidity Atmosphere	40°C 90 %RH	240 h	Display Quality : No defect Display Function : No defect Peel-off of Organic Sealing : None Current Consumption : No defect
Temp. Cycle	-30°C 0.5 h R.T. 0.5 h 80°C 0.5 h	10 cycles	Display Quality : No defect Display Function : No defect Peel-off of Organic Sealing : None Bubble on Cell : None
High Temp. Operation	70°C	500 h	Display Quality : No defect Display Function : No defect Current Consumption : No defect
Point Activation life	Polyacetal stylus (R0.8) Hitting force 3N Hitting speed 2time/s	one million times	Satisfy spec below item Terminal resistance Insulation resistance Linearity Actuation Force

* Each test item uses a test LCD only once. The tested LCD is not used in any other tests.
* The LCD is tested in circumstances in which there is no condensation.
* The tested LCD is inspected after 24 hours of storage at room temperature and room humidity after each test is finished.
* The reliability test is not an out-going inspection.
* The results of the reliability test are for your reference purpose only. The reliability test is conducted only to examine the LCD's capability.

No	Description	Drawn	Checked	Checked	Approved

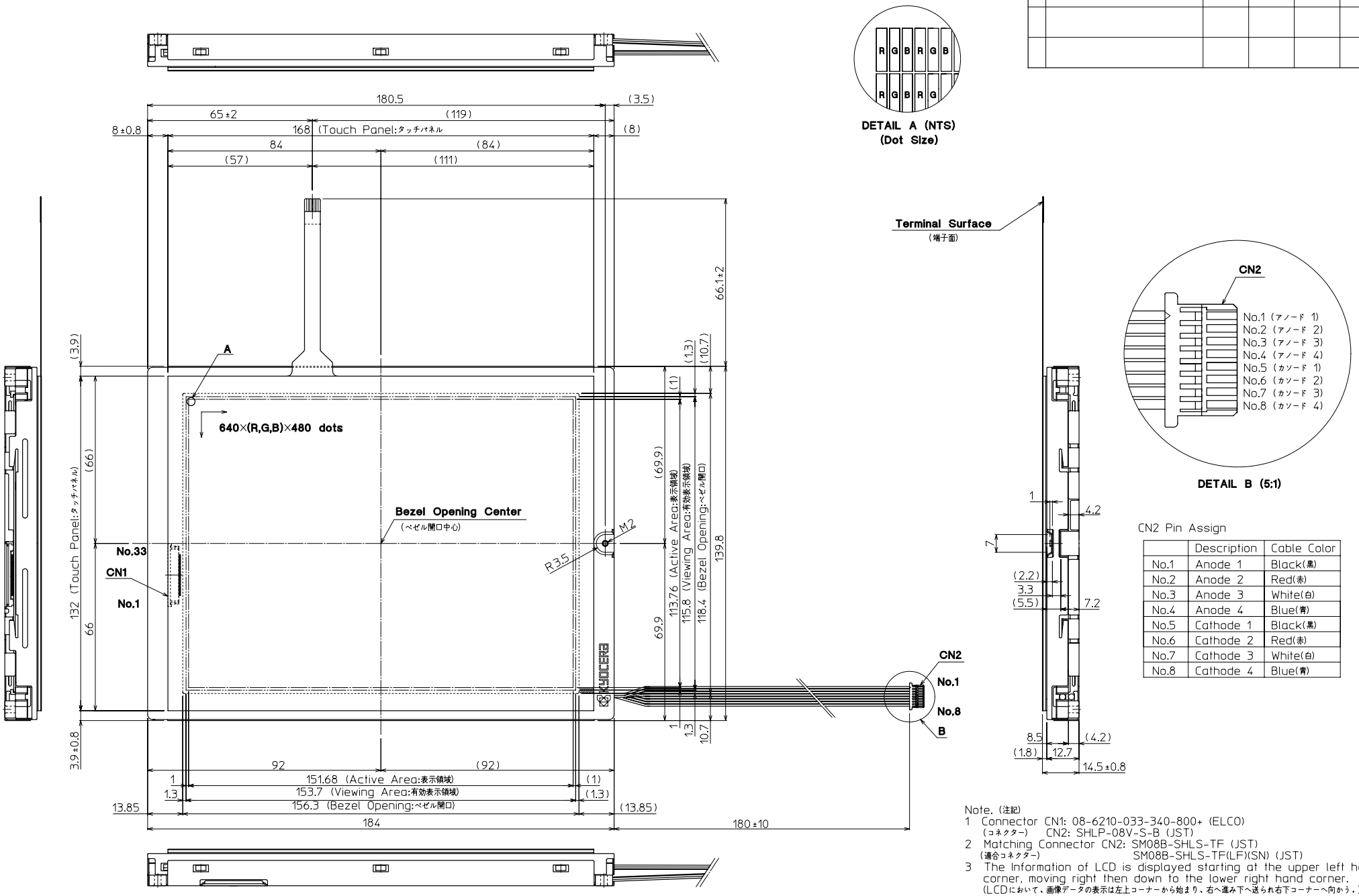

DETAIL A (NTS)
(Dot Size)

DETAIL B (5:1)

CN2 Pin Assign

	Description	Cable Color
No.1	Anode 1	Black(黒)
No.2	Anode 2	Red(赤)
No.3	Anode 3	White(白)
No.4	Anode 4	Blue(青)
No.5	Cathode 1	Black(黒)
No.6	Cathode 2	Red(赤)
No.7	Cathode 3	White(白)
No.8	Cathode 4	Blue(青)

Note. (注記)
1 Connector CN1: 08-6210-033-340-800+ (ELCO)
(コネクター) CN2: SHLP-08V-S-B (JST)
2 Matching Connector CN2: SM08B-SHLS-TF (JST)
(適合コネクター) SM08B-SHLS-TF(LF)(SN) (JST)
3 The Information of LCD is displayed starting at the upper left hand corner, moving right then down to the lower right hand corner.
(LCDにおいて、画像データの表示は左上コーナーから始まり、右へ進み下へ送られ右下コーナーへ向かう。)
4 Tolerance without indication: ±0.5
(指示無き公差)

Material 材 質	Treatment 処 理	Approved '07.08.28	Checked	Checked '07.08.27	Drawn	Scale 1:1(5:1,NTS)	Title TCG075VGLAF	KYOCERA	Year-Month-Day '07.08.24	Size 2
Quantity 製作数	Description; 備 考 RoHS	阿部		倉元	小林		Outline Dimensions	Drawing No. 121A5062500		1/3

No	Description	Drawn	Checked	Checked	Approved

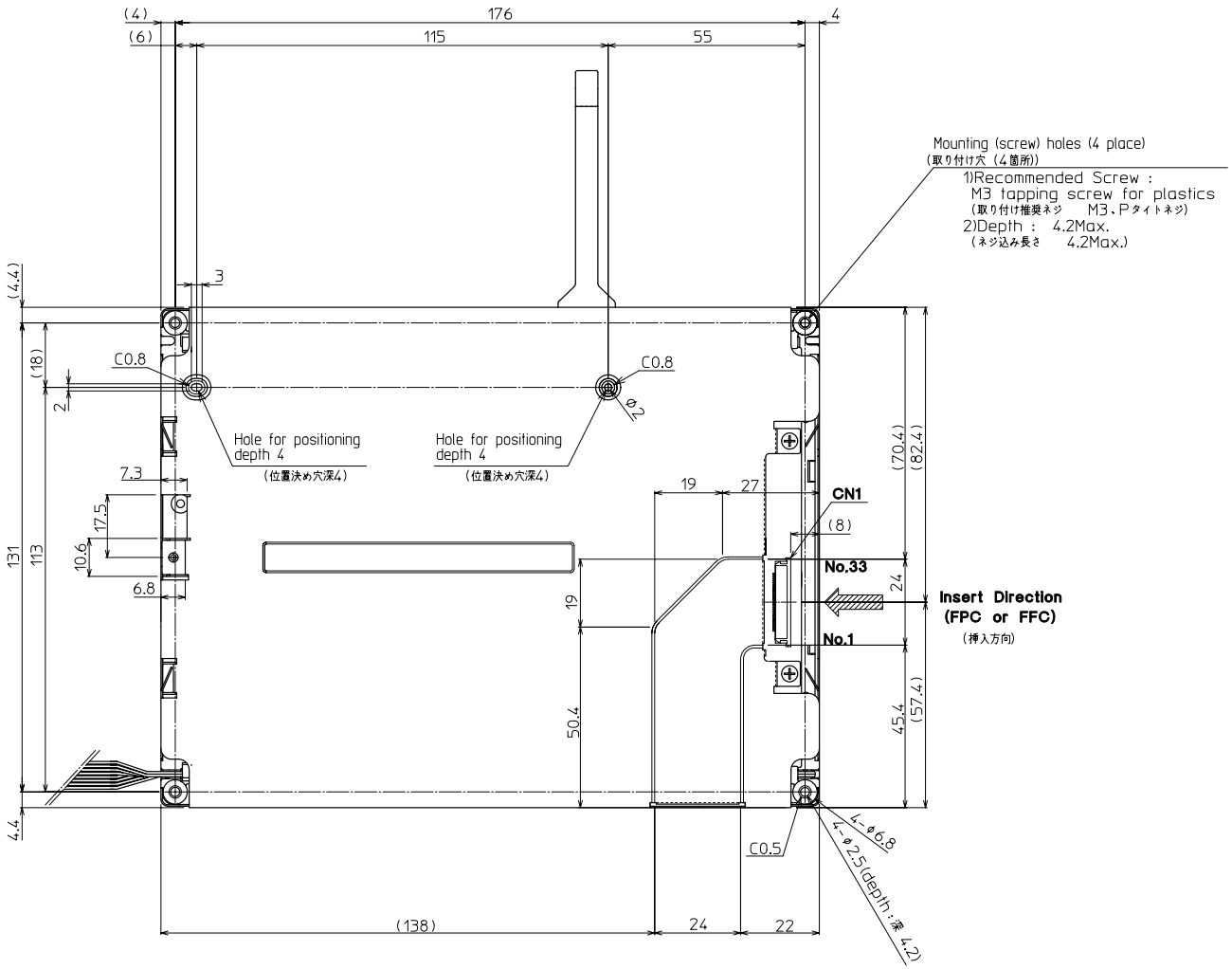

Note. (注記)
1 Tolerance without indication: ±0.5
(指示無き公差)

Material 材質	Treatment 処理	Approved '07.08.28	Checked	Checked '07.08.27	Drawn	Scale 1:1	Title TCG075VGLAF	KYOCERA	Year-Month-Day '07.08.24	Size 2
Quantity 製作数	Description; 備考 RoHS	阿部		倉元	小林		Outline Dimensions	Drawing No. 121A5062500		2/3

No	Description	Drawn	Checked	Checked	Approved

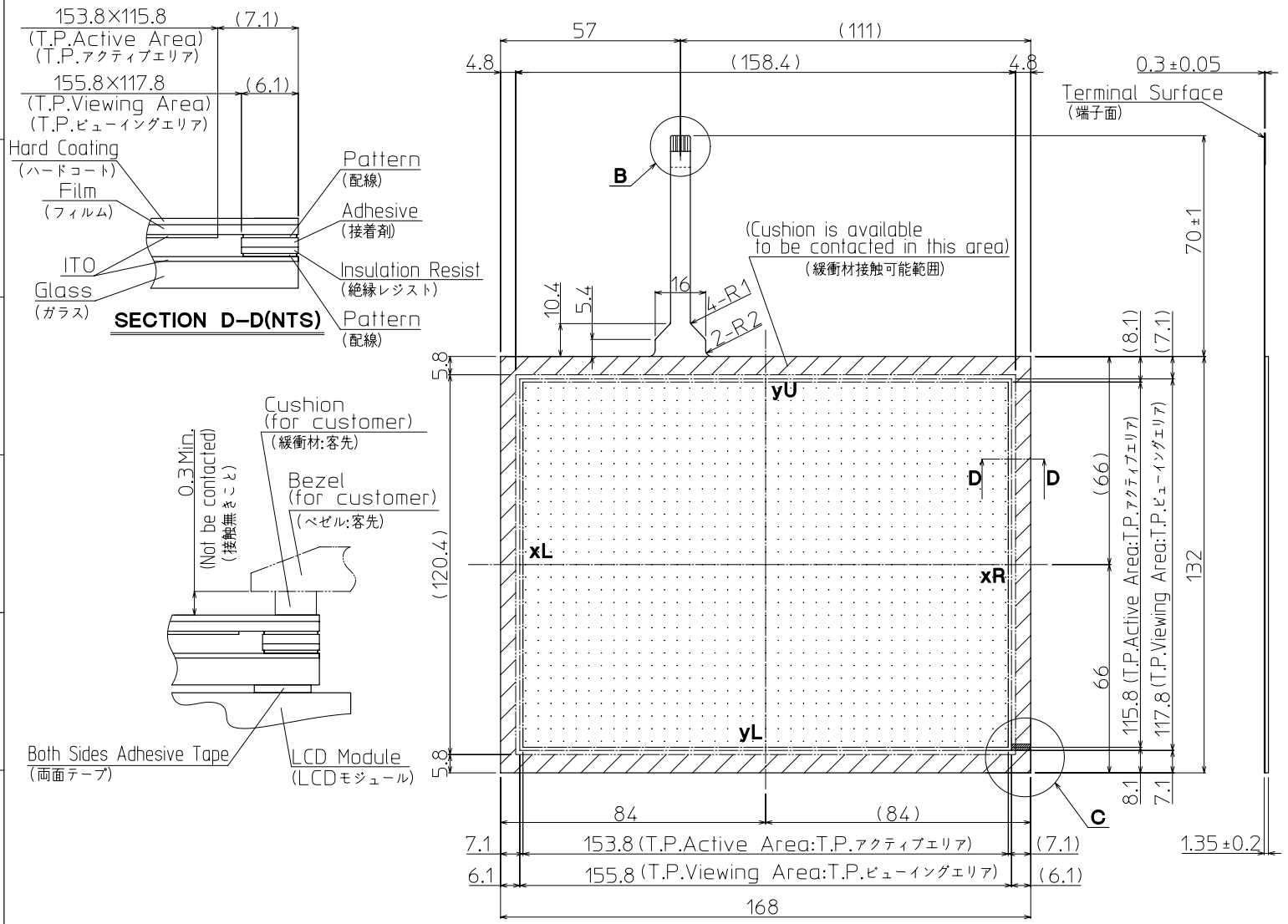

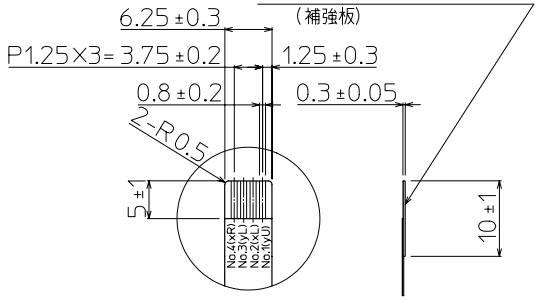

DETAIL B (2:1)

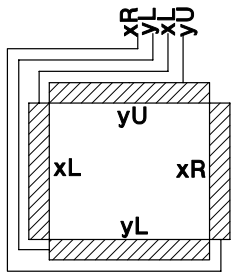

Touch Panel Pin–assign

(タッチパネル ピンアサイン)

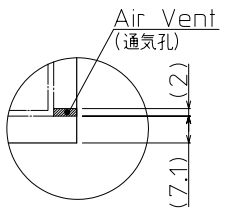

DETAIL C

Note(注記)

	Name(名称)	Explanation(説明)
1	T.P.	Touch panel (タッチパネル)
2	T.P. Active Area (T.P.アクティブエリア)	Operating area of touch panel (タッチパネルの動作範囲)
3	T.P. Viewing Area (T.P.ビューイングエリア)	Warranty area of touch panel's appearance (タッチパネルの外観(傷・異物等)保証範囲)
		By giving pressure between the active area and the effective viewing area of the touch panel, there is a possibility that the touch panel will operate. (タッチパネルアクティブエリアとタッチパネルビューイングエリア間は荷重をかけた場合は、タッチパネルが動作する可能性があります。)

Precaution in use of touch panel.
(タッチパネル使用上の注意事項)
1. Fix touch panel at LCD module and the rear side of touch panel.
(タッチパネルの固定はLCDモジュール側とタッチパネル裏面とで行なうこと)
2. Must maintain a gap between inside of bezel and touch panel to avoid malfunction or electrode damage of touch panel.
(ベゼル内側とタッチパネルの接触厳禁。誤動作や電極破損の原因となります。)

Precaution in use of touch panel.
(タッチパネル使用上の注意事項)
There is vent channel to equalize air pressure between the inner space of the touch panel and the atmosphere. Please make sure it is not blocked by your housing and mounting method.
(タッチパネルの中には内圧と外圧を均一にするため通気孔を設けています。
取り付け時にこの通気孔を塞がないようにして(ださい。)

Material 材質	Treatment 処理	Approved	Checked	Checked	Drawn	Scale	Title		Year–Month–Day	Size
		'07.08.28		'07.08.27		1:1(2:1,NTS)	TCG075VGLAF	KYOCERA	'07.08.24	2
Quantity 製作数	Description; 備考 RoHS	阿部		倉元	小林		T.P. Outline Dimensions	Drawing No.	121A5062500	3/3

SPEC.NO.	TQ3C-8EAF0-E2DDH30-00
DATE	August 30, 2007

FOR:

KYOCERA INSPECTION STANDARD

TYPE : TCG075VGLAF-G00

KYOCERA CORPORATION
KAGOSHIMA HAYATO PLANT
LCD DIVISION

Original	Designed by :Engineering Dept.			Confirmed by :QA Dept.	
Issue Date	Prepared	Checked	Approved	Checked	Approved
August 30, 2007	S. Kojima	H. Tokumori	Y. Matsumoto	J. Sakaguchi	

Revision Record

Date	Designed by: Engineering Dept.			Confirmed by: QA Dept.	
	Prepared	Checked	Approved	Checked	Approved

Rev. No.	Date	Page	Descriptions

1) Note

<table>
<tr><th></th><th colspan="3">Note</th></tr>
<tr><td>General</td><td colspan="3">1. Customer identified anomalies not defined within this inspection standard shall be reviewed by Kyocera, and an additional standard shall be determined by mutual consent.

2. Inspection Conditions
Luminance : 500 Lux minimum
Inspection distance : 300 mm (from the sample)
Temperature : 25 ± 5 ℃
Direction : directly above</td></tr>
<tr><td rowspan="6">Definition of Inspection item</td><td rowspan="3">Dot defect</td><td>Bright dot defect</td><td>The dot is constantly "on" when power applied to the LCD, even when all "Black" data sent to the screen.
Inspection tool:5% Transparency neutral density filter.
Count dot:If the dot is visible through the filter
Don't count dot:If the dot is not visible through the filter.
 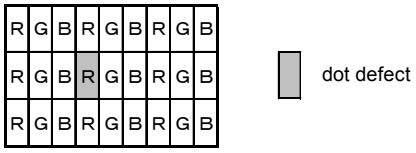 </td></tr>
<tr><td>Black dot defect</td><td>The dot is constantly "off" when power applied to the LCD, even when all "white" data sent to the screen.</td></tr>
<tr><td>Adjacent dot</td><td>Adjacent dot defect is defined as two or more bright dot defects or black dot defects.
 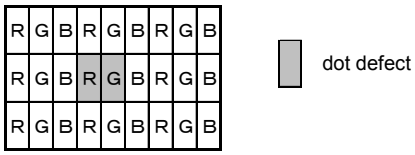 </td></tr>
<tr><td rowspan="2">External inspection</td><td>Bubble,Scratches, Foreign particle (Polarizer, Cell, Backlight)</td><td>Visible operating (all pixcels "Black" or "White") and non operating.</td></tr>
<tr><td>Appearance inspection</td><td>Does not satisfy the value at the spec.</td></tr>
<tr><td>Others</td><td>CFL wires</td><td>Damaged to the CFL wires, connector, pin, functional failure or appearance failure.</td></tr>
<tr><td>Definition of size</td><td colspan="2">Definition of circle size
 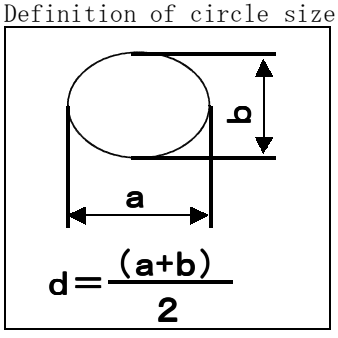
Definition of linear size
 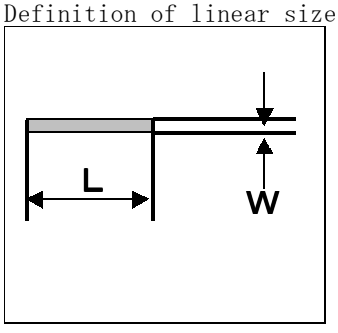 </td></tr>
</table>

2) Standard

<table>
<tr><th colspan="2">Classification</th><th colspan="2">Inspection item</th><th>Judgement standard</th></tr>
<tr><td rowspan="6">defect (in LCD glass)</td><td rowspan="5">Dot defect</td><td colspan="2">Bright dot defect</td><td>Acceptable number : 4 bright dots defects
Bright dot spacing : 5 mm or more</td></tr>
<tr><td colspan="2">Black dot defect</td><td>Acceptable number : 5 black dots defects
Black dot spacing : 5 mm or more</td></tr>
<tr><td rowspan="2">2 dots join</td><td>Bright dot defect</td><td>Acceptable number : 2</td></tr>
<tr><td>Black dot defect</td><td>Acceptable number : 3</td></tr>
<tr><td colspan="2">3 or more dots join</td><td>Acceptable number : 0</td></tr>
<tr><td colspan="2">Total dot defects</td><td>Acceptable number : 5 Max</td></tr>
<tr><td>Others</td><td colspan="2">White dot, Dark dot
(Circle)</td><td>
<table>
<tr><th>Size(mm)</th><th>Acceptable Number</th></tr>
<tr><td>d＜0.2</td><td>(neglected)</td></tr>
<tr><td>0.2＜d≦0.4</td><td>5</td></tr>
<tr><td>0.4＜d≦0.5</td><td>3</td></tr>
<tr><td>0.5＜d</td><td>0</td></tr>
</table>
</td></tr>
<tr><td rowspan="4">External inspection (Defect on Polarizer or between Polariz-er and LCD glass)</td><td colspan="2">Polarizer(Scratches)</td><td>
<table>
<tr><th>Width(mm)</th><th>Length(mm)</th><th>Acceptable Number</th></tr>
<tr><td>W≦0.1</td><td>-</td><td>(neglected)</td></tr>
<tr><td rowspan="2">0.1＜W≦0.3</td><td>L≦5.0</td><td>(neglected)</td></tr>
<tr><td>5.0＜L</td><td>0</td></tr>
<tr><td>0.3＜W</td><td>-</td><td>0</td></tr>
</table>
</td></tr>
<tr><td colspan="2">Polarizer Touch panel (Bubble, Dent)</td><td>
<table>
<tr><th>Size(mm)</th><th>Acceptable Number</th></tr>
<tr><td>d＜0.2</td><td>(neglected)</td></tr>
<tr><td>0.2＜d≦0.3</td><td>5</td></tr>
<tr><td>0.3＜d≦0.5</td><td>3</td></tr>
<tr><td>0.5＜d</td><td>0</td></tr>
</table>
</td></tr>
<tr><td colspan="2">Foreign Particle(Circular shape)</td><td>
<table>
<tr><th>Size(mm)</th><th>Acceptable Number</th></tr>
<tr><td>d＜0.2</td><td>(neglected)</td></tr>
<tr><td>0.2＜d≦0.4</td><td>5</td></tr>
<tr><td>0.4＜d≦0.5</td><td>3</td></tr>
<tr><td>0.5＜d</td><td>0</td></tr>
</table>
</td></tr>
<tr><td colspan="2">Foreign Particle (Linear shape), Scratches</td><td>
<table>
<tr><th>Width(mm)</th><th>Length(mm)</th><th>Acceptable Number</th></tr>
<tr><td>W≦0.03</td><td>-</td><td>(neglected)</td></tr>
<tr><td rowspan="3">0.03＜W≦0.1</td><td>L≦2.0</td><td>(neglected)</td></tr>
<tr><td>2.0＜L≦4.0</td><td>3</td></tr>
<tr><td>4.0＜L</td><td>0</td></tr>
<tr><td>0.1＜W</td><td>-</td><td>(According to Circular shape)</td></tr>
</table>
</td></tr>
</table>

<table>
<tr><th>Inspection item</th><th>Judgement standard</th></tr>
<tr><td>Scratch,
Foreige particle
(Touch Screen portion)</td><td>
(D = Average Diameter = (major axis + minor axis)／2
<table>
<tr><th></th><th>Width(mm)</th><th>Length(mm)</th><th>Acceptable No.</th></tr>
<tr><td rowspan="4">Scratch</td><td>0.1≧W＞0.08</td><td>4≧L</td><td>1pcs within φ30mm</td></tr>
<tr><td>0.08≧W＞0.05</td><td>6≧L</td><td>2pcs within φ20mm</td></tr>
<tr><td>0.05≧W＞0.03</td><td>10≧L</td><td>2pcs within φ20mm</td></tr>
<tr><td>0.03≧W</td><td>20≧L</td><td>neglected</td></tr>
<tr><td rowspan="2">Foreige (line like)</td><td>0.1≧W＞0.05</td><td>5≧L</td><td>2pcs within φ30mm</td></tr>
<tr><td>0.05≧W</td><td>neglected</td><td>neglected</td></tr>
<tr><td rowspan="2">Foreige (circle like)</td><td colspan="2">0.3≧D＞0.2</td><td>2pcs within φ30mm</td></tr>
<tr><td colspan="2">0.2≧D</td><td>neglected</td></tr>
</table>
Above are applied to the visible area.
Unless there are foreign particles and damage affected seriously to the electrical performance in the visible area, we approve of this product.
</td></tr>
<tr><td>Glass crack
(Touch Screen portion)</td><td>
<table>
<tr><td rowspan="4">Judgement standard</td><td colspan="3">Corner crack
 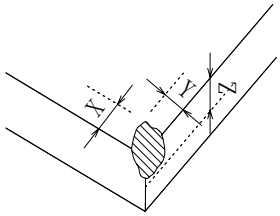 </td><td colspan="3">Cracks in other area than in corner
 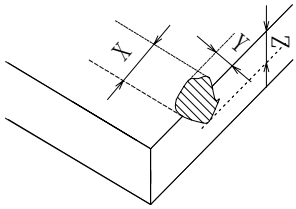 </td></tr>
<tr><td>X</td><td>Y</td><td>Z</td><td>X</td><td>Y</td><td>Z</td></tr>
<tr><td>≦3</td><td>≦3</td><td><t</td><td>≦5</td><td>≦1.5</td><td><t</td></tr>
<tr><td colspan="3">2pcs/panel</td><td colspan="3">2pcs/side</td></tr>
</table>
<table>
<tr><td rowspan="2">Judgement standard</td><td>Progressive crack
 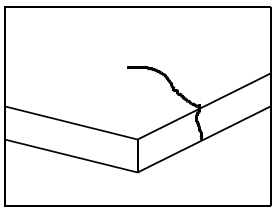 </td></tr>
<tr><td>0pcs(NG even 1pcs)</td></tr>
</table>
Above are applied to the visible area.
Unless there are foreign particles and damage affected seriously to the electrical performance in the visible area, we approve of this product.
</td></tr>
</table>