www.DataSheet4U.com

TDA7496SA

5W+5W AMPLIFIER WITH DC VOLUME CONTROL

PRODUCT PREVIEW

- 5+5W OUTPUT POWER
  R_L = 8Ω @THD = 10% V_{CC} = 22V
- ST-BY AND MUTE FUNCTIONS
- LOW TURN-ON TURN-OFF POP NOISE
- LINEAR VOLUME CONTROL DC COUPLED WITH POWER OP. AMP.
- NO BOUCHEROT CELL
- NO ST_BY RC INPUT NETWORK
- SINGLE SUPPLY RANGING UP TO 35V
- SHORT CIRCUIT PROTECTION
- THERMAL OVERLOAD PROTECTION
- INTERNALLY FIXED GAIN
- SOFT CLIPPING
- VARIABLE OUTPUT AFTER VOLUME CONTROL CIRCUIT
- CLIPWATT 15 PACKAGE

MULTIPOWER BI50II TECHNOLOGY

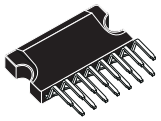

Clipwatt 15
ORDERING NUMBER: TDA7496SA

DESCRIPTION

The TDA7496SA is a stereo 5+5W class AB power amplifier assembled i the @Clipwatt 15 package, specially designed for high quality sound TV applications.

Features of the TDA7496SA include linear volume control Stand-by and Mute functions.

The TDA7496SA is pin to pin compatible with TDA7496, TDA7496S, TDA7496SA, TDA7495, TDA7495SA, TDA7494S, TDA7494SA.

BLOCK DIAGRAM

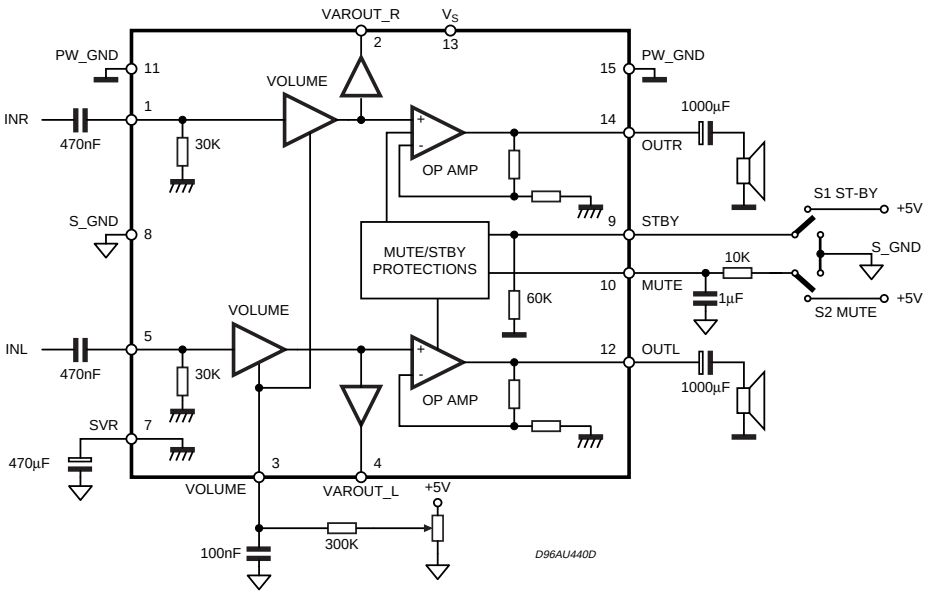

This is preliminary information on a new product now in development. Details are subject to change without notice.

www.DataSheet4U.com

DataSheet4U.com

www.DataSheet4U.com

ABSOLUTE MAXIMUM RATINGS

Symbol	Parameter	Value	Unit
V_S	DC Supply Voltage	35	V
V_{IN}	Maximum Input Voltage	8	Vpp
P_{tot}	Total Power Dissipation (T_{amb} = 70°C)	16	W
T_{amb}	Ambient Operating Temperature (1)	0 to 70	°C
T_{stg},T_J	Storage and Junction Temperature	-40 to 150	°C
V_3	Volume Control DC Voltage	7	V

PIN CONNECTION (top view)

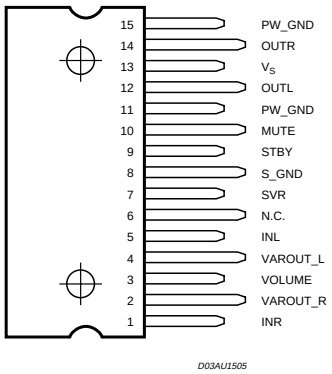

THERMAL DATA

Symbol	Parameter	Value	Unit
$R_{th\ j\text{-}case}$	Thermal Resistance junction-case	Typ. = 4.5; Max. = 5	°C/W
$R_{th\ j\text{-}amb}$	Thermal Resistance junction-ambient Max.	48	°C/W

ELECTRICAL CHARACTERISTCS

(Refer to the test circuit R_L = 8Ω, f = 1KHz, R_g = 50Ω, V_S = 22V, T_{amb} = 25°C)

Symbol	Parameter	Test Condition	Min.	Typ.	Max.	Unit
V_S	Supply Voltage Range		10		32	V
I_q	Total Quiescent Current			25	50	mA
DCV_{os}	Output DC Offset Referred to SVR Potential	No Input Signal		200		mV
V_O	Quiescent Output Voltage			11		V
P_O	Output Power	THD = 10%; R_L = 8Ω; THD = 1%; R_L = 8Ω;	5	5.5 4		W
		THD = 10%; R_L = 4Ω; V_S = 12V THD = 1%; R_L = 4Ω; V_S = 12V		2.1 1.0		W
THD	Total Harmonic Distortion	G_v = 30dB; P_O = 1W; f = 1KHz			0.4	%

www.DataSheet4U.com

DataSheet4U.com

www.DataSheet4U.com

ELECTRICAL CHARACTERISTCS (continued)
(Refer to the test circuit R_L = 8Ω, f = 1KHz, R_g = 50Ω, V_S = 22V, T_{amb} = 25°C)

Symbol	Parameter	Test Condition	Min.	Typ.	Max.	Unit
I_{peak}	Output Peak Current	(internally limited)	1.0	1.3		A
V_{IN}	Input Signal				2.8	Vrms
G_V	Closed Loop Gain	$V_{Ol\ Ctrl}$ >4.5V	28.5	30	31.5	dB
G_{VLine}	Monitor Out Gain	$V_{Ol\ Ctrl}$ >4.5V; Zload >30KΩ	-1.5	0	1.5	dB
A_{Min} V_{OL}	Attenuation at Minimum Volume	$V_{Ol\ Ctrl}$ <0.5V	80			dB
BW				0.6		MHz
e_N	Total Output Noise	f = 20Hz to 22KHz PLAY, max volume		500	800	µV
		f = 20Hz to 22KHz PLAY, max attenuation		100	250	µV
		f = 20Hz to 22KHz MUTE		60	150	µV
SR	Slew Rate		5	8		V/µs
R_i	Input Resistance		22.5	30		KΩ
$R_{Var\ Out}$	Variable Output Resistance			30	100	Ω
$R_{L\ Var\ Out}$	Variable Output Load		2			KΩ
SVR	Supply Voltage Rejection	f = 1KHz; max volume C_{SVR} = 470µF; V_{RIP} = 1Vrms	35	39		dB
		f = 1KHz; max attenuation C_{SVR} = 470µF; V_{RIP} = 1Vrms	55	65		dB
T_M	Thermal Muting			150		°C
T_S	Thermal Shut-down			160		°C
MUTE & INPUT SELECTION FUNCTIONS						
V_{ST-ON}	Stand-by ON Threshold		3.5			V
V_{ST-OFF}	Stand-by OFF Threshold				1.5	V
V_{MUTEON}	Mute ON threshold		3.5			V
$V_{MUTEOFF}$	Mute OFF threshold				1.5	V
A_{MUTE}	Mute Attenuation		50	65		dB
I_{qST-BY}	Quiescent Current @ Stand-by			0.6	1	mA
$I_{stbyBIAS}$	Stand-by bias current	Stand by ON: V_{ST-BY} = 5V; V_{mute} = 5V		80		µA
		Play or Mute	-20	-5		µA
$I_{muteBIAS}$	Mute Bias Current	Mute		1	5	µA
		Play		0.2	2	µA

www.DataSheet4U.com

DataSheet4U.com

www.DataSheet4U.com

APPLICATION SUGGESTIONS

The recommended values of the external components are those shown on the application circuit of figure 1. Different values can be used, the following table can help the designer.

COMPONENT	SUGGESTION VALUE	PURPOSE	LARGER THAN SUGGESTION	SMALLER THAN SUGGESTION
R1	300K	Volume Control Circuit	Larger volume regulation time	Smaller volume regulation time
R2	10K	Mute time constant	Larger mute on/off time	Smaller mute on/off time
P1	50K	Volume Control Circuit		
C1	1000µF	Supply voltage bypass		Danger of oscillation
C2	470nF	Input DC decoupling	Lower low frequency cutoff	Higher low frequency cutoff
C3	470nF	Input DC decoupling	Lower low frequency cutoff	Higher low frequency cutoff
C4	470µF	Ripple rejection	Better SVR	Worse SVR
C5	100nF	Volume control time constant	Larger volume regulation time	Smaller volume regulation time
C6	1000µF	Output DC decoupling	Lower low frequency cutoff	Higher low frequency cutoff
C7	1µF	Mute time constant	Larger mute on/off time	Smaller mute on/off time
C8	1000µF	Output DC decoupling	Lower low frequency cutoff	Higher low frequency cutoff
C9	100nF	Supply voltage bypass		Danger of oscillation

Figure 1. Application Circui

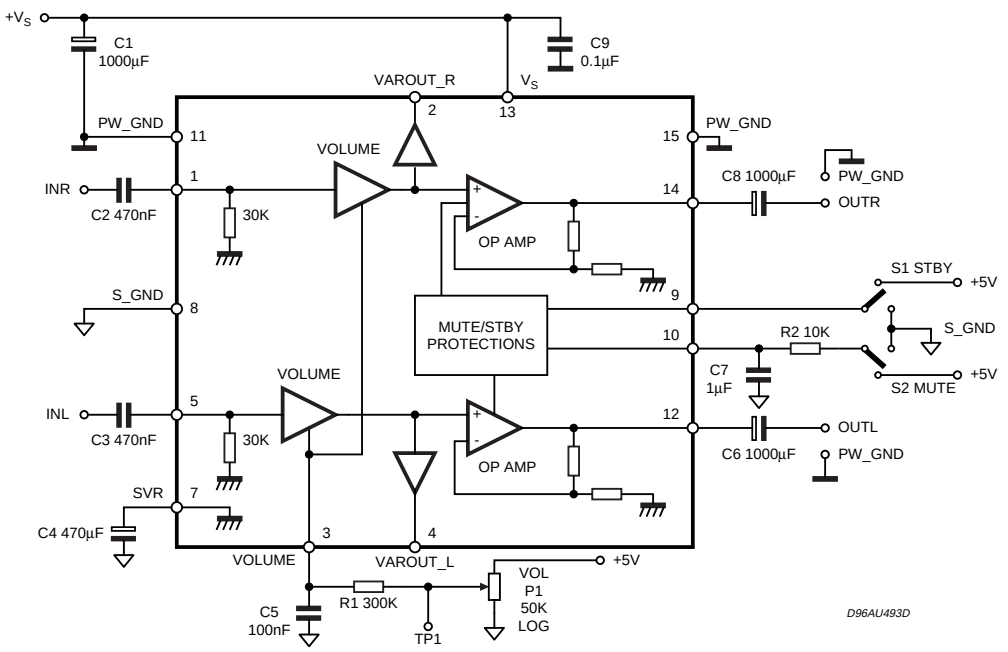

www.DataSheet4U.com

DataSheet4U.com

www.DataSheet4U.com

MUTE STAND-BY TRUTH TABLE

MUTE	St-BY	OPERATING CONDITION
H	H	STAND-BY
L	H	STAND-BY
H	L	MUTE
L	L	PLAY

Turn ON/OFF Sequences (for optimizing the POP performances)

Figure 1. USING ONLY THE MUTE FUNCTION

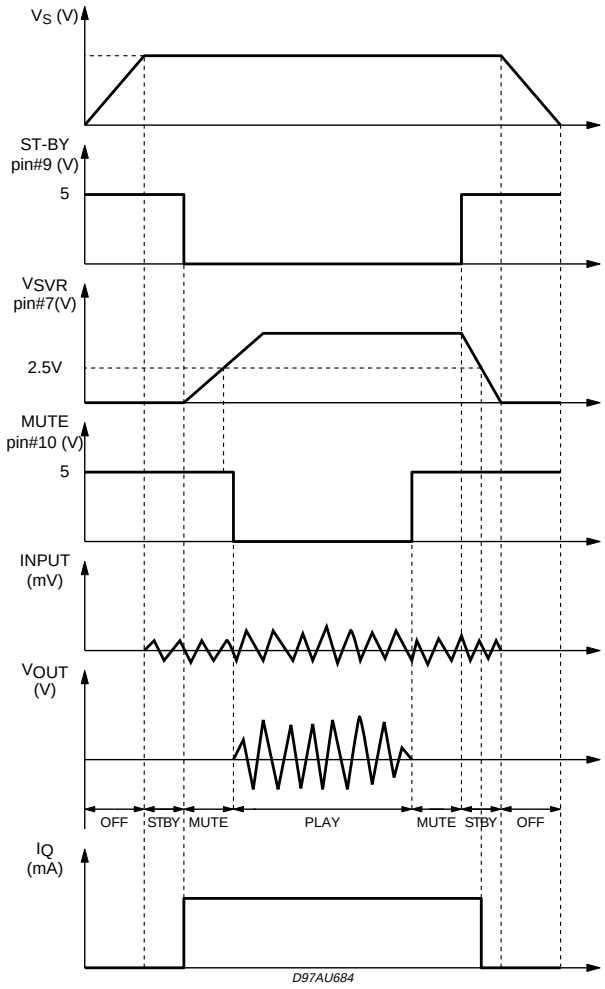

USING ONLY THE MUTE FUNCTION

To semplify the application, the stand-by pin can be connected directly to Ground. During the ON/OFF transitions is recommended to respect the following conditions:

– At the turn-on the transition mute to mute - play must be made when the SVR pin is higher than 2.5V

– At the turn-off the TDA7496A must be brought to mute from the play condition when the SVR pin is higher than 2.5V.

www.DataSheet4U.com

DataSheet4U.com

www.DataSheet4U.com

Figure 2. P.C.B. and Component layoutPCB and Component Layout

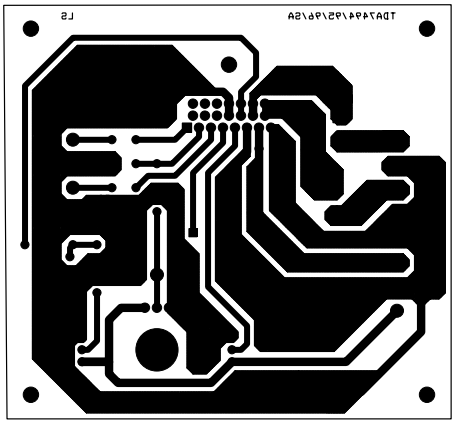

Figure 3.

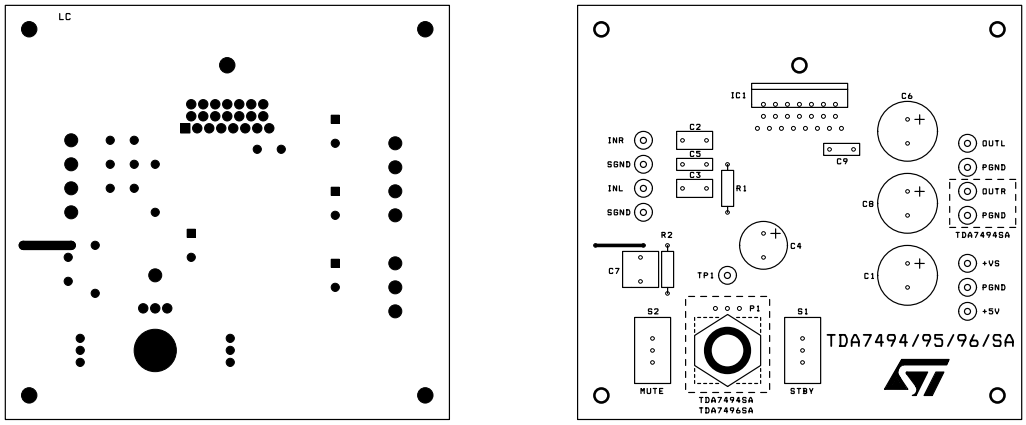

www.DataSheet4U.com

DataSheet4U.com

www.DataSheet4U.com

Figure 4. Quiescent Current vs. Supply Voltage

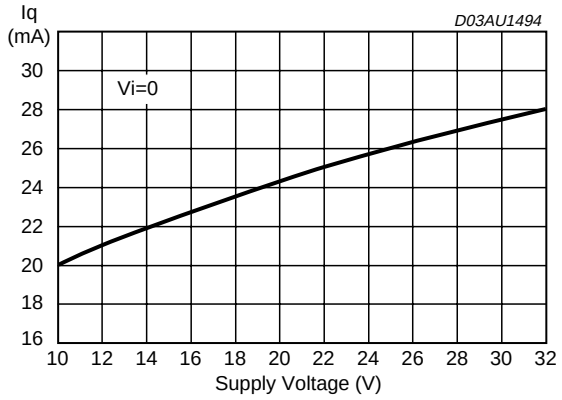

Figure 5. Output Dc Offset vs. Supply Voltage

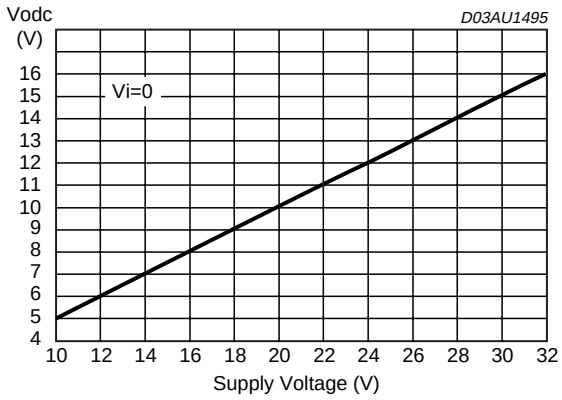

Figure 6. Output Power vs. Supply Voltage

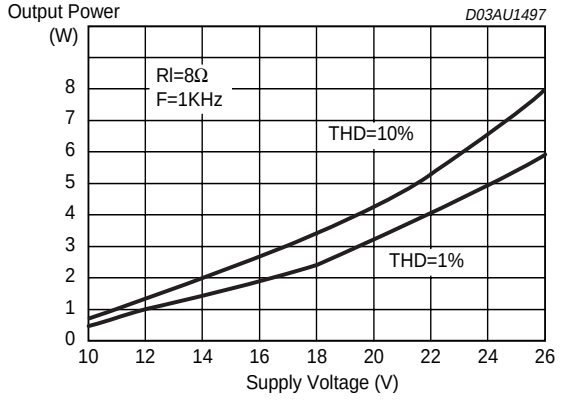

Figure 7. Output DC Offset vs. Supply Voltage

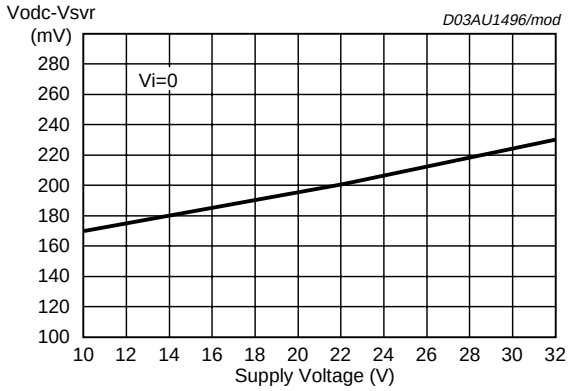

Figure 8. Output Power vs Supply Voltage

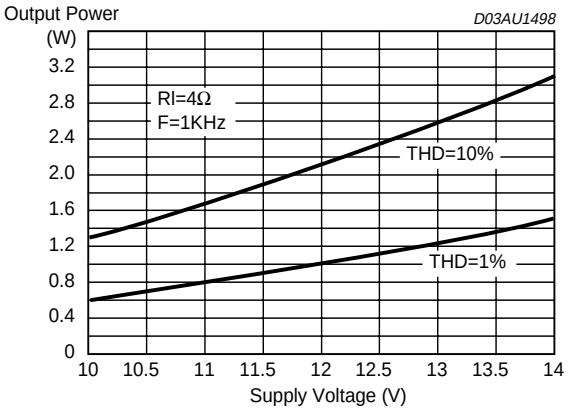

Figure 9. Distortion vs Output Power

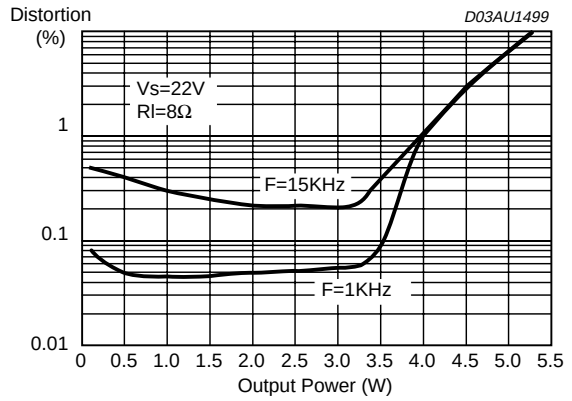

www.DataSheet4U.com

DataSheet4U.com

www.DataSheet4U.com

Figure 10. Distortion vs Output Power

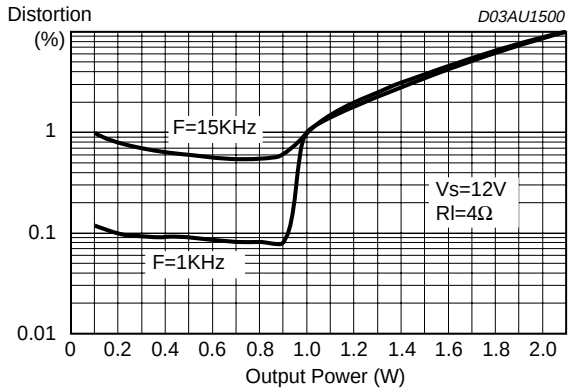

Figure 11. Closed Loop Gain vs. Frequency

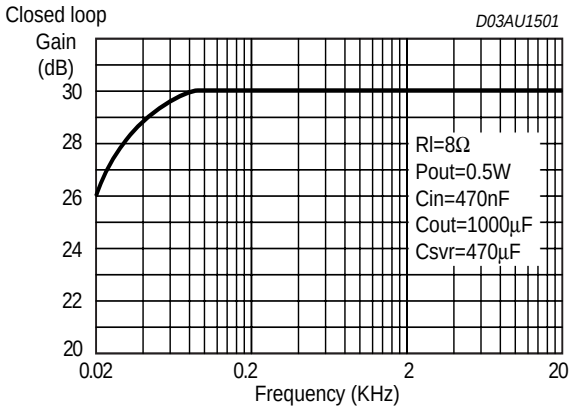

Figure 12. St-By Attenuation vs Vpin 9

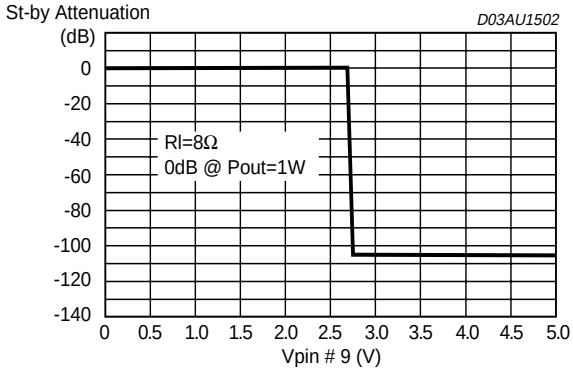

Figure 13. Mute Attenuation vs Vpin 10

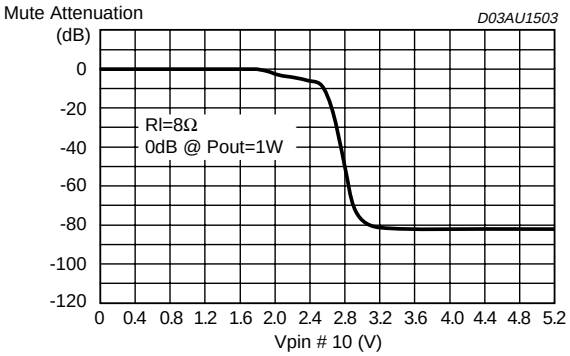

PINS DESCRIPTION

Figure 14. PIN SVR

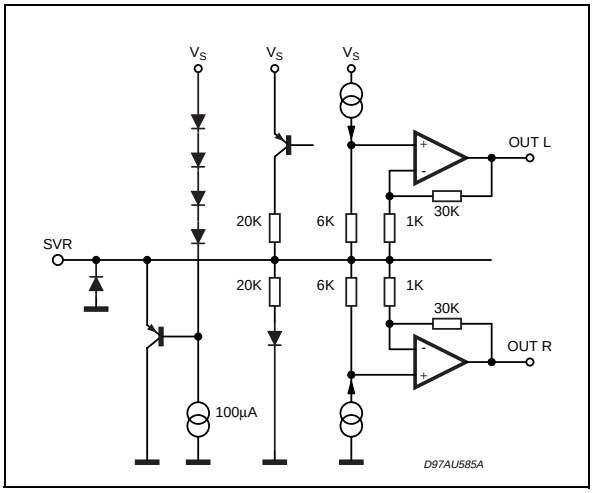

Figure 15. PINS: INL,INR

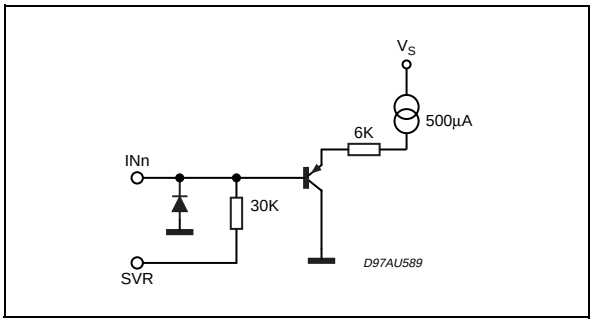

www.DataSheet4U.com

DataSheet4U.com

www.DataSheet4U.com

Figure 17. PIN ST-BY

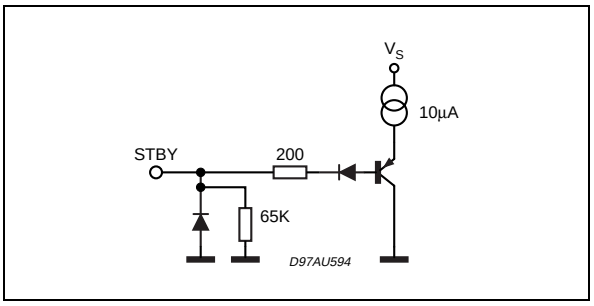

Figure 18. PIN: MUTE

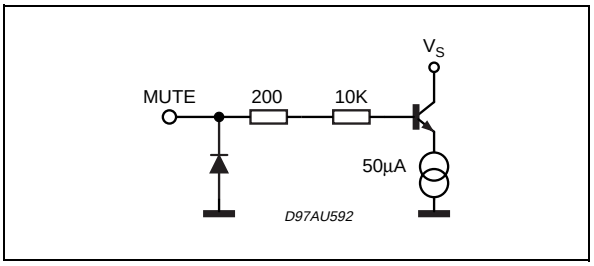

Figure 19. PINS: OUT R, OUT L

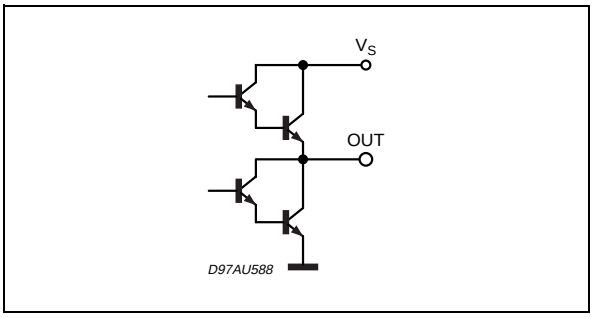

Figure 20. PINS: VAROUT-L VAROUT-R

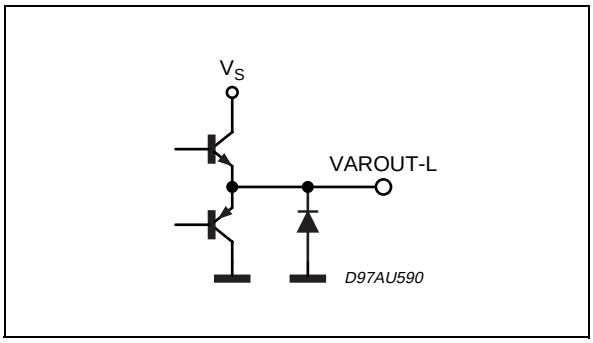

Figure 21. PIN: VOLUME

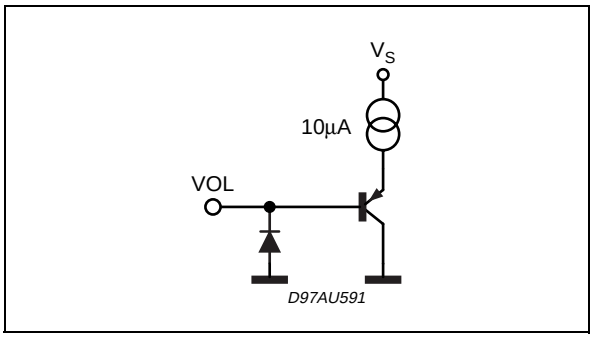

Figure 22. PINS: PW-GND, S-GND

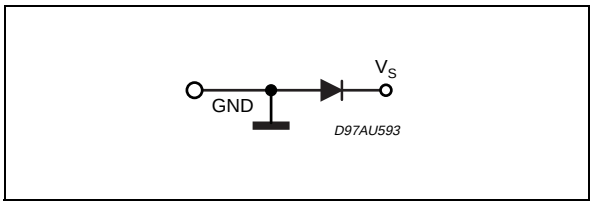

www.DataSheet4U.com

DataSheet4U.com

www.DataSheet4U.com

HEAT SINK DIMENSIONING:

In order to avoid the thermal protection intervention, that is placed approximatively at T_j = 150°C, it is important the dimensioning of the Heat Sinker R_{Th} (°C/W).

The parameters that influence the dimensioning are:

– Maximum dissipated power for the device (P_{dmax})

– Max thermal resistance Junction to case ($R_{Th\ j\text{-}c}$)

– Max. ambient temperature $T_{amb\ max}$

– Quiescent current I_q (mA)

Example:

V_{CC} = 22V, R_{load} = 8ohm, $R_{Th\ j\text{-}c}$ = 5 °C/W , $T_{amb\ max}$ = 50°C

$$P_{dmax} = (N° \text{ channels}) \cdot \frac{V_{cc}^2}{2\Pi^2 \cdot R_{load}} + I_q \cdot V_{cc}$$

$P_{dmax} = 2 \cdot (3.0) + 0.5 = 6.5$ W

$$\text{(Heat Sinker) } R_{Th\ c\text{-}a} = \frac{150 - T_{amb\ max}}{P_{d\ max}} - R_{Th\ j\text{-}c} = \frac{150 - 50}{6.5} - 5.0 = 10°C/W$$

In figure 23 is shown the Power derating curve for the device.

Figure 23. Power derating curve

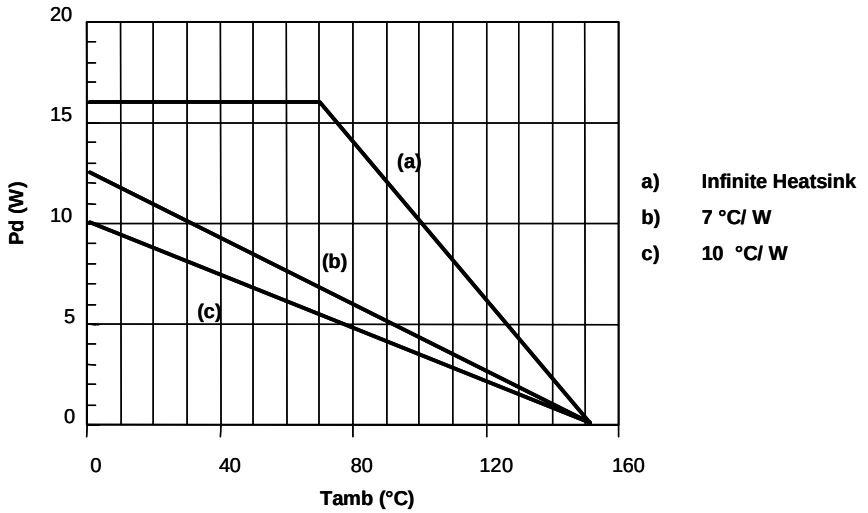

www.DataSheet4U.com

DataSheet4U.com

www.DataSheet4U.com

Clipwatt Assembling Suggestions

The suggested mounting method of Clipwatt on external heat sink, requires the use of a clip placed as much as possible in the plastic body center, as indicated in the example of figure 24.

A thermal grease can be used in order to reduce the additional thermal resistance of the contact between package and heatsink.

A pressing force of 7 - 10 Kg gives a good contact and the clip must be designed in order to avoid a maximum contact pressure of 15 Kg/mm2 between it and the plastic body case.

As example , if a 15Kg force is applied by the clip on the package , the clip must have a contact area of 1mm2 at least.

Figure 24. Example of right placement of the clip

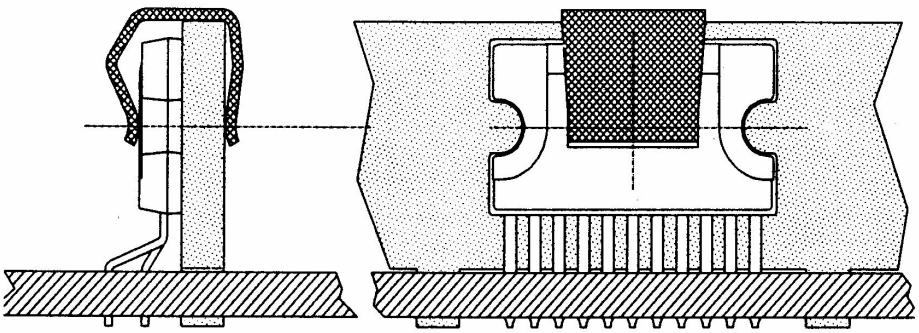

www.DataSheet4U.com

DataSheet4U.com

www.DataSheet4U.com

DIM.	mm			inch		
	MIN.	TYP.	MAX.	MIN.	TYP.	MAX.
A			3.2			0.126
B			1.05			0.041
C		0.15			0.006	
D		1.55			0.061	
E	0.49		0.55	0.019		0.022
F	0.67		0.73	0.026		0.029
G	1.14	1.27	1.4	0.045	0.050	0.055
G1	17.57	17.78	17.91	0.692	0.700	0.705
H1		12			0.480	
H2		18.6			0.732	
H3	19.85			0.781		
L		17.95			0.707	
L1		14.45			0.569	
L2	10.7	11	11.2	0.421	0.433	0.441
L3		5.5			0.217	
M		2.54			0.100	
M1		2.54			0.100	

OUTLINE AND MECHANICAL DATA

Weight: 1.92gr

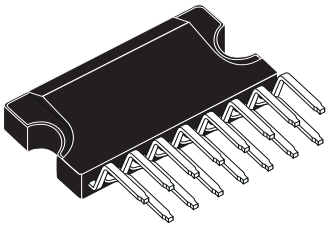

Clipwatt15

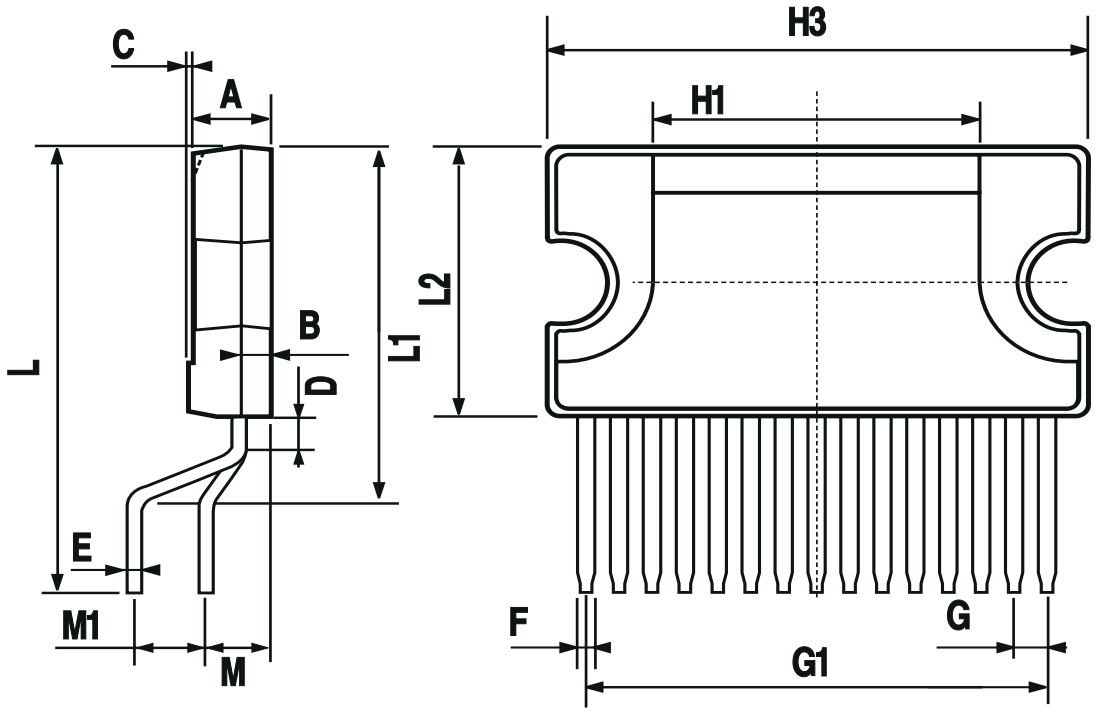

www.DataSheet4U.com

DataSheet4U.com

www.DataSheet4U.com

Information furnished is believed to be accurate and reliable. However, STMicroelectronics assumes no responsibility for the consequences of use of such information nor for any infringement of patents or other rights of third parties which may result from its use. No license is granted by implication or otherwise under any patent or patent rights of STMicroelectronics. Specifications mentioned in this publication are subject to change without notice. This publication supersedes and replaces all information previously supplied. STMicroelectronics products are not authorized for use as critical components in life support devices or systems without express written approval of STMicroelectronics.

The ST logo is a registered trademark of STMicroelectronics.
All other names are the property of their respective owners

© 2003 STMicroelectronics - All rights reserved

STMicroelectronics GROUP OF COMPANIES
Australia - Belgium - Brazil - Canada - China - Czech Republic - Finland - France - Germany - Hong Kong - India - Israel - Italy - Japan - Malaysia - Malta - Morocco - Singapore - Spain - Sweden - Switzerland - United Kingdom - United States
www.st.com

www.DataSheet4U.com

DataSheet4U.com