TJA1048

Dual high-speed CAN transceiver with Standby mode

Rev. 6 — 19 March 2018 Product data sheet

1. General description

The TJA1048 is a dual high-speed CAN transceiver that provides an interface between a Controller Area Network (CAN) protocol controller and the physical two-wire CAN bus. The transceiver is designed for high-speed CAN applications in the automotive industry, providing the differential transmit and receive capability to (a microcontroller with) a CAN protocol controller.

The TJA1048 belongs to the third generation of high-speed CAN transceivers from NXP Semiconductors, offering significant improvements over first- and second-generation devices such as the TJA1040. It offers improved Electro Magnetic Compatibility (EMC) and ElectroStatic Discharge (ESD) performance, and also features:

- Ideal passive behavior to the CAN bus when the supply voltage is off
- A very low-current Standby mode with bus wake-up capability on both channels
- Can be interfaced directly to microcontrollers with supply voltages from 3 V to 5 V

The TJA1048 implements the CAN physical layer as defined in ISO 11898-2:2016 and SAE J2284-1 to SAE J2284-5. This implementation enables reliable communication in the CAN FD fast phase at data rates up to 5 Mbit/s.

These features make the TJA1048 an excellent choice for all types of HS-CAN networks containing more than one HS-CAN interface that require a low-power mode with wake-up capability via the CAN bus, especially for Body Control and Gateway units.

2. Features and benefits

2.1 General

- Two TJA1042/3 HS-CAN transceivers combined monolithically in a single package
- ISO 11898-2:2016 and SAE J2284-1 to SAE J2284-5 compliant
- Timing guaranteed for data rates up to 5 Mbit/s in the CAN FD fast phase
- Suitable for 12 V and 24 V systems
- Low ElectroMagnetic Emission (EME) and high ElectroMagnetic Immunity (EMI)
- V_{IO} input allows for direct interfacing with 3 V to 5 V microcontrollers
- Available in SO14 and HVSON14 packages
- Leadless HVSON14 package (3.0 mm × 4.5 mm) with improved Automated Optical Inspection (AOI) capability
- Dark green product (halogen free and Restriction of Hazardous Substances (RoHS) compliant)
- AEC-Q100 qualified

2.2 Low-power management

- Very low-current Standby mode with host and bus wake-up capability
- Functional behavior predictable under all supply conditions
- Transceiver disengages from the bus when not powered up (zero load)
- Wake-up receiver powered by V_{IO}; allows shut down of V_{CC}

2.3 Protection

- High ESD handling capability on the bus pins
- Bus pins protected against transients in automotive environments
- Transmit Data (TXD) dominant time-out function
- Undervoltage detection on pins V_{CC} and V_{IO}
- Thermally protected

3. Quick reference data

Table 1. Quick reference data

Symbol	Parameter	Conditions	Min	Typ	Max	Unit
V_{CC}	supply voltage		4.5	-	5.5	V
V_{IO}	supply voltage on pin V_{IO}		2.8	-	5.5	V
$V_{uvd(VCC)}$	undervoltage detection voltage on pin V_{CC}		3.5	-	4.5	V
$V_{uvd(VIO)}$	undervoltage detection voltage on pin V_{IO}		1.3	2.0	2.7	V
I_{CC}	supply current	Standby mode	-	0.5	2	μA
		Normal mode				
		both channels recessive	-	-	20	mA
		one channel dominant	-	-	80	mA
		both channels dominant	-	90	140	mA
I_{IO}	supply current on pin V_{IO}	Standby mode; $V_{TXD} = V_{IO}$	-	16.5	26	μA
		Normal mode				
		both channels recessive	-	-	35	μA
		one channel dominant	-	-	300	μA
		both channels dominant	-	-	550	μA
V_{ESD}	electrostatic discharge voltage	IEC 61000-4-2 at pins CANHx and CANLx	–6	-	+6	kV
V_{CANH}	voltage on pin CANH	pins CANH1 and CANH2	–58	-	+58	V
V_{CANL}	voltage on pin CANL	pins CANL1 and CANL2	–58	-	+58	V
T_{vj}	virtual junction temperature		–40	-	+150	°C

All information provided in this document is subject to legal disclaimers.

© NXP Semiconductors N.V. 2018. All rights reserved.

4. Ordering information

Table 2. Ordering information

Type number	Package		
	Name	Description	Version
TJA1048T	SO14	plastic small outline package; 14 leads; body width 3.9 mm	SOT108-1
TJA1048TK	HVSON14	plastic, thermal enhanced very thin small outline package; no leads; 14 terminals; body 3 × 4.5 × 0.85 mm	SOT1086-2

All information provided in this document is subject to legal disclaimers.

© NXP Semiconductors N.V. 2018. All rights reserved.

5. Block diagram

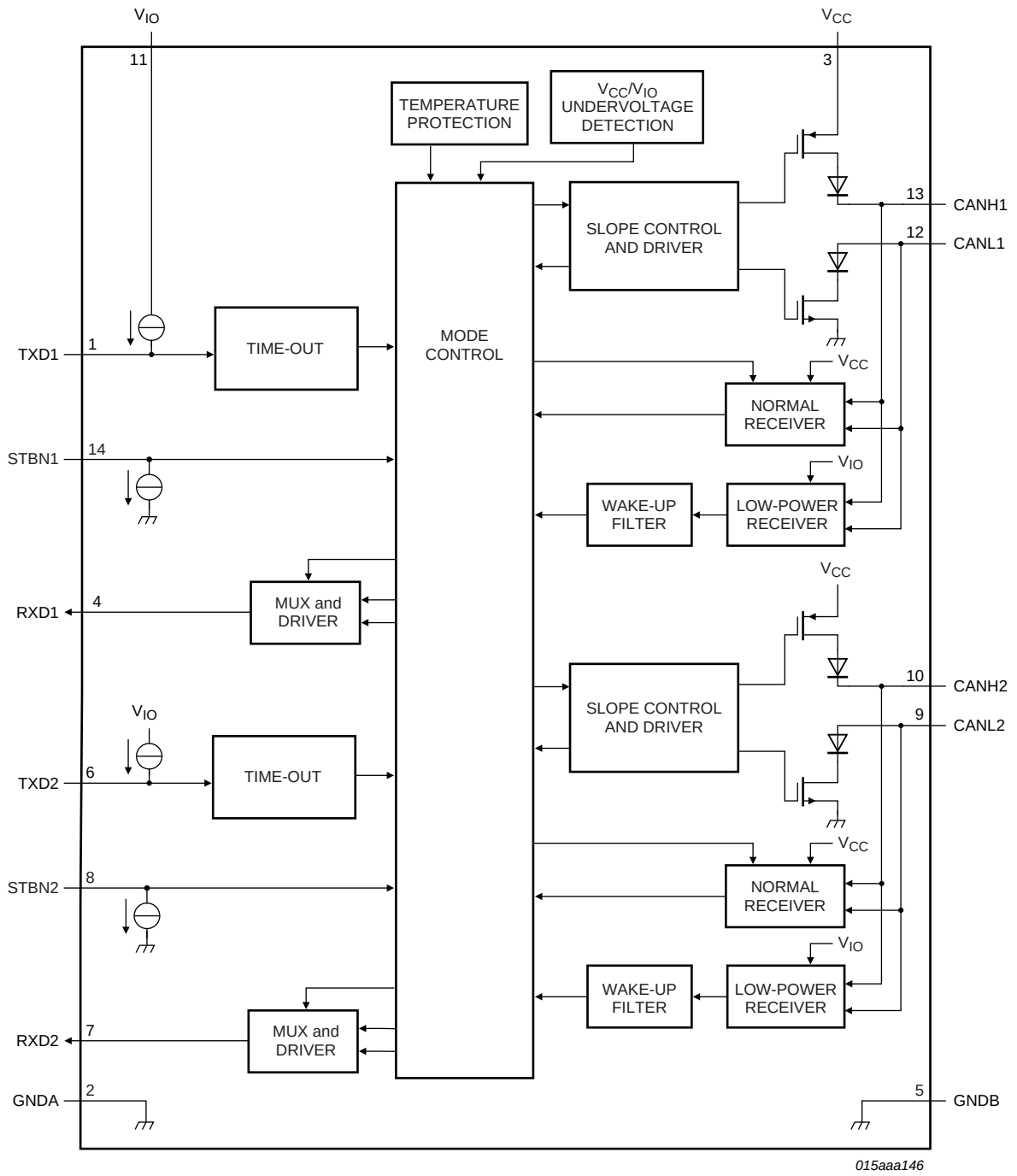

Fig 1. Block diagram

All information provided in this document is subject to legal disclaimers.

© NXP Semiconductors N.V. 2018. All rights reserved.

6. Pinning information

6.1 Pinning

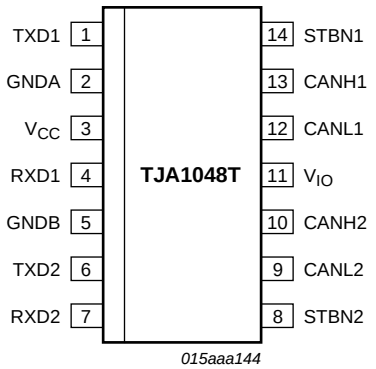

Fig 2. Pin configuration diagram: SO14

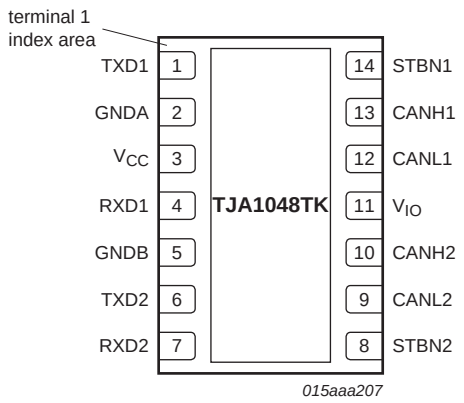

Fig 3. Pin configuration diagram: HVSON14

6.2 Pin description

Table 3. Pin description

Symbol	Pin	Description
TXD1	1	transmit data input 1
GNDA	2[1]	transceiver ground
V_{CC}	3	transceiver supply voltage
RXD1	4	receive data output 1; reads out data from bus line1
GNDB	5[1]	transceiver ground
TXD2	6	transmit data input 2
RXD2	7	receive data output 2; reads out data from bus line 2
STBN2	8	standby control input 2 (HIGH = Normal mode, LOW = Standby mode)
CANL2	9	LOW-level CAN bus line 2
CANH2	10	HIGH-level CAN bus line 2
V_{IO}	11	supply voltage for I/O level adapter
CANL1	12	LOW-level CAN bus line 1
CANH1	13	HIGH-level CAN bus line 1
STBN1	14	standby control input 1 (HIGH = Normal mode, LOW = Standby mode)

[1] Pins 2 and 5 must be connected together externally in the application. HVSON14 package die supply ground is connected to both the GND pin and the exposed center pad. The GND pin must be soldered to board ground. For enhanced thermal and electrical performance, it is recommended that the exposed center pad also be soldered to board ground.

All information provided in this document is subject to legal disclaimers.

© NXP Semiconductors N.V. 2018. All rights reserved.

7. Functional description

The TJA1048 is a dual HS-CAN stand-alone transceiver with Standby mode and robust ESD handling capability. It combines the functionality of two TJA1042/3 transceivers with improved EMC and quiescent current performance. Improved slope control and high DC handling capability on the bus pins provide additional application flexibility.

7.1 Operating modes

The TJA1048 supports two operating modes per transceiver, Normal and Standby. The operating mode can be selected independently for each transceiver via pins STBN1 and STBN2 (see Table 4).

Table 4. Operating modes

Mode	Pin STBN1/STBN2	Pin RXD1/RXD2	
		LOW	HIGH
Normal	HIGH	bus dominant	bus recessive
Standby	LOW	wake-up request detected	no wake-up request detected

7.1.1 Normal mode

A HIGH level on pin STBN1/STBN2 selects Normal mode. In this mode, the transceiver can transmit and receive data via the bus lines CANH1/CANL1 and CANH2/CANL2 (see Figure 1 for the block diagram). The differential receiver converts the analog data on the bus lines into digital data which is output on pin RXD1/RXD2. The slopes of the output signals on the bus lines are controlled internally and are optimized in a way that guarantees the lowest possible EME.

7.1.2 Standby mode

A LOW level on pin STBN1/STBN2 selects Standby mode. In Standby mode, the transceiver is not able to transmit or correctly receive data via the bus lines. The transmitter and Normal-mode receiver blocks are switched off to reduce supply current, and only a low-power differential receiver monitors the bus lines for activity.

In Standby mode, the bus lines are biased to ground to minimize the system supply current. The low-power receiver is supplied by V_{IO}, and is capable of detecting CAN bus activity even if V_{IO} is the only supply voltage available. When pin RXD1/RXD2 goes LOW to signal a wake-up request, a transition to Normal mode will not be triggered until STBN1/STBN2 is forced HIGH.

7.1.3 Remote wake-up (via the CAN bus)

A dedicated wake-up sequence (specified in ISO 11898-2:2016) must be received to wake-up the TJA1048 from a low-power mode. This filtering is necessary to avoid spurious wake-up events due to a dominant clamped CAN bus or dominant phases caused by noise or spikes on the bus.

A valid wake-up pattern consists of:

- A dominant phase of at least $t_{wake(busdom)}$ followed by
- A recessive phase of at least $t_{wake(busrec)}$ followed by
- A dominant phase of at least $t_{wake(busdom)}$

All information provided in this document is subject to legal disclaimers.

© NXP Semiconductors N.V. 2018. All rights reserved.

The complete dominant-recessive-dominant pattern must be received within $t_{to(wake)bus}$ to be recognized as a valid wake-up pattern (see Figure 4). Pin RXD1/RXD2 will remain recessive until the wake-up event has been triggered.

After a wake-up sequence has been detected, the TJA1048 will remain in Standby mode with the bus signals reflected on RXD1/RXD2. Note that dominant or recessive phases lasting less than $t_{fltr(wake)bus}$ will not be detected by the low-power differential receiver and will not be reflected on RXD1/RXD2 in Standby mode.

A wake-up event will not be registered if any of the following events occurs while a wake-up sequence is being transmitted:

- The TJA1048 switches to Normal mode
- The complete wake-up pattern was not received within $t_{to(wake)bus}$
- A V_{IO} undervoltage is detected ($V_{IO} < V_{uvd(VIO)}$; see Section 7.2.3)

If any of these events occurs while a wake-up sequence is being received, the internal wake-up logic will be reset and the complete wake-up sequence will have to be re-transmitted to trigger a wake-up event.

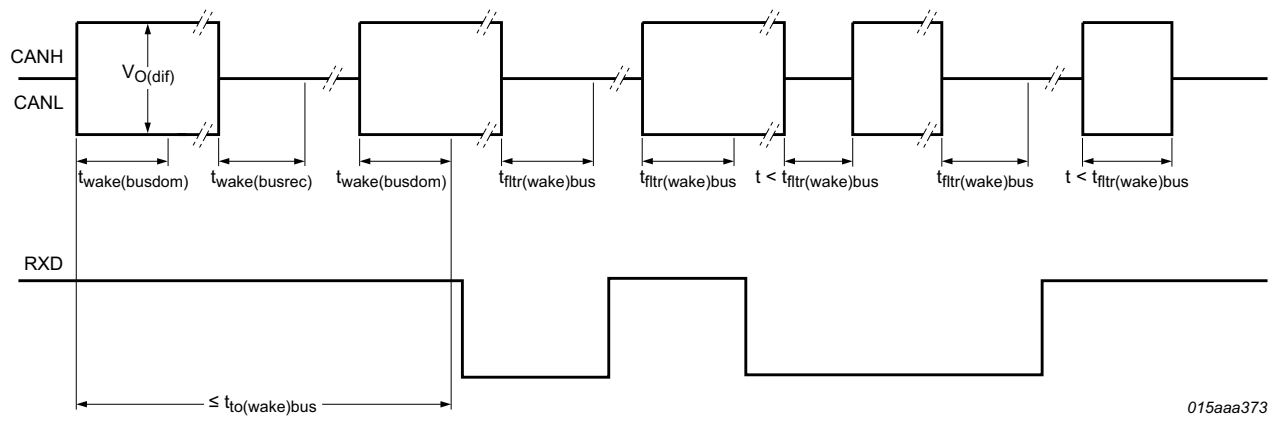

Fig 4. Wake-up timing

7.2 Fail-safe features

7.2.1 TXD dominant time-out function

A 'TXD dominant time-out' timer is started when pin TXD1/TXD2 is set LOW. If the LOW state on this pin persists for longer than $t_{to(dom)TXD}$, the transmitter is disabled, releasing the bus lines to recessive state. This function prevents a hardware and/or software application failure from driving the bus lines to a permanent dominant state (blocking all network communications). The TXD dominant time-out timer is reset when pin TXD1/TXD2 is set HIGH. The TXD dominant time-out time also defines the minimum possible bit rate of 40 kbit/s. The TJA1048 has two TXD dominant time-out timers that operate independently of each other.

All information provided in this document is subject to legal disclaimers.

© NXP Semiconductors N.V. 2018. All rights reserved.

7.2.2 Internal biasing of TXD1, TXD2, STBN1 and STBN2 input pins

Pins TXD1 and TXD2 have internal pull-ups to V_{IO} and pins STBN1 and STBN2 have internal pull-downs to GNDA and GNDB. This ensures a safe, defined state if any of these pins is left floating. Pins GNDA and GNDB must be connected together in the application.

Pull-up/pull-down currents flow in these pins in all states. Pins TXD1 and TXD2 should be held HIGH in Standby mode to minimize the supply current; pins STBN1 and STBN2 should be held LOW.

7.2.3 Undervoltage detection on pins V_{CC} and V_{IO}

Should V_{CC} drop below the V_{CC} undervoltage detection level, $V_{uvd(VCC)}$, both transceivers will switch to Standby mode. The logic state of pins STBN1 and STBN2 will be ignored until V_{CC} has recovered.

Should V_{IO} drop below the V_{IO} undervoltage detection level, $V_{uvd(VIO)}$, the transceivers will switch off and disengage from the bus (zero load) until V_{IO} has recovered.

7.2.4 Overtemperature protection

The output drivers are protected against overtemperature conditions. If the virtual junction temperature exceeds the shutdown junction temperature, $T_{j(sd)}$, both output drivers will be disabled. When the virtual junction temperature drops below $T_{j(sd)}$ again, the output drivers will recover independently once TXD1/TXD2 has been reset to HIGH. Including the TXD1/TXD2 condition prevents output driver oscillation due to small variations in temperature.

7.3 V_{IO} supply pin

Pin V_{IO} should be connected to the microcontroller supply voltage (see Figure 7). This will adjust the signal levels of pins TXD1, TXD2, RXD1, RXD2, STBN1 and STBN2 to the I/O levels of the microcontroller. Pin V_{IO} also provides the internal supply voltage for the transceiver's low-power differential receiver. For applications running in low-power mode, this allows the bus lines to be monitored for activity even if there is no supply voltage on pin V_{CC}.

All information provided in this document is subject to legal disclaimers.

© NXP Semiconductors N.V. 2018. All rights reserved.

8. Limiting values

Table 5. Limiting values

In accordance with the Absolute Maximum Rating System (IEC 60134). All voltages are referenced to GND.

Symbol	Parameter	Conditions	Min	Max	Unit
V_x	voltage on pin x[1]	on pins CANH1, CANL1, CANH2 and CANL2	–58	+58	V
		on any other pin	–0.3	+7	V
$V_{(CANH-CANL)}$	voltage between pin CANH and pin CANL		–27	+27	V
V_{trt}	transient voltage	on pins CANH1, CANL1, CANH2 and CANL2 [2]			
		pulse 1	–100	-	V
		pulse 2a	-	75	V
		pulse 3a	–150	-	V
		pulse 3b	-	100	V
V_{ESD}	electrostatic discharge voltage	IEC 61000-4-2 (150 pF, 330 Ω) [3]			
		on pins CANH1, CANL1, CANH2 and CANL2	–6	+6	kV
		Human Body Model (HBM); 100 pF, 1.5 kΩ [4]			
		on pins CANH1, CANL1, CANH2 and CANL2	–6	+6	kV
		at any other pin	–4	+4	kV
		Machine Model (MM); 200 pF, 0.75 μH, 10 Ω [5]			
		at any pin	–300	+300	V
		Charged Device Model (CDM); field Induced charge; 4 pF [6]			
		at corner pins	–750	+750	V
		at any pin	–500	+500	V
T_{vj}	virtual junction temperature	[7]	–40	+150	°C
T_{stg}	storage temperature		–55	+150	°C

[1] The device can sustain voltages up to the specified values over the product lifetime, provided applied voltages (including transients) never exceed these values.

[2] According to IEC TS 62228 (2007), Section 4.2.4; parameters for standard pulses defined in ISO7637 part 2: 2004-06.

[3] According to IEC TS 62228 (2007), Section 4.3; DIN EN 61000-4-2.

[4] According to AEC-Q100-002.

[5] According to AEC-Q100-003.

[6] According to AEC-Q100-011 Rev-C1. The classification level is C4B.

[7] In accordance with IEC 60747-1. An alternative definition of virtual junction temperature is: $T_{vj} = T_{amb} + P \times R_{th(vj-a)}$, where $R_{th(vj-a)}$ is a fixed value to be used for the calculation of T_{vj}. The rating for T_{vj} limits the allowable combinations of power dissipation (P) and ambient temperature (T_{amb}).

9. Thermal characteristics

Table 6. Thermal characteristics

Values determined for free convection conditions on a JESD51-7 board.

Symbol	Parameter	Conditions	Value	Unit
$R_{th(vj-a)}$	thermal resistance from virtual junction to ambient	SO14	65	K/W
		HVSON14	42	K/W

All information provided in this document is subject to legal disclaimers.

© NXP Semiconductors N.V. 2018. All rights reserved.

10. Static characteristics

Table 7. Static characteristics

T_{vj} = −40 °C to +150 °C; V_{CC} = 4.5 V to 5.5 V; V_{IO} = 2.8 V to 5.5 V; R_L = 60 Ω unless specified otherwise; all voltages are defined with respect to ground; positive currents flow into the device[1].

Symbol	Parameter	Conditions	Min	Typ	Max	Unit
Supply; pin V_{CC}						
V_{CC}	supply voltage		4.5	-	5.5	V
I_{CC}	supply current	Standby mode; V_{TXD}[2] = V_{IO} [3]	-	0.5	5	μA
		Normal mode				
		both channels recessive	-	-	20	mA
		one channel dominant	-	-	80	mA
		both channels dominant	-	90	140	mA
		Normal mode; V_{TXD} = 0 V; −3 V < (V_{CANH} = V_{CANL}) < +18 V				
		one channel recessive; short-circuit on other channel	-	90	120	mA
		one channel dominant; short-circuit on other channel	-	150	180	mA
		short-circuit on both channels	-	160	220	mA
$V_{uvd(VCC)}$	undervoltage detection voltage on pin V_{CC}		3.5	-	4.5	V
I/O level adapter supply; pin V_{IO}						
V_{IO}	supply voltage on pin V_{IO}		2.8	-	5.5	V
I_{IO}	supply current on pin V_{IO}	Standby mode; V_{TXD} = V_{IO} [3]	-	16.5	26	μA
		Normal mode				
		both channels recessive	-	-	35	μA
		one channel dominant	-	-	300	μA
		both channels dominant	-	-	550	μA
$V_{uvd(VIO)}$	undervoltage detection voltage on pin V_{IO}		1.3	2.0	2.7	V
Standby mode control input; pins STBN1 and STBN2						
V_{IH}	HIGH-level input voltage		0.7V_{IO}	-	V_{IO} + 0.3	V
V_{IL}	LOW-level input voltage		−0.3	-	0.3V_{IO}	V
I_{IH}	HIGH-level input current	V_{STBN}[4] = V_{IO}	1	-	10	μA
I_{IL}	LOW-level input current	V_{STBN} = 0 V	−1	-	+1	μA
CAN transmit data input; pins TXD1 and TXD2						
V_{IH}	HIGH-level input voltage		0.7V_{IO}	-	V_{IO} + 0.3	V
V_{IL}	LOW-level input voltage		−0.3	-	0.3V_{IO}	V
I_{IH}	HIGH-level input current	V_{TXD}[2] = V_{IO}	−5	-	+5	μA
I_{IL}	LOW-level input current	V_{TXD} = 0 V	−260	−150	−30	μA
C_i	input capacitance	[5]	-	5	10	pF
CAN receive data output; pins RXD1 and RXD2						
I_{OH}	HIGH-level output current	V_{RXD}[6] = V_{IO} − 0.4 V; V_{IO} = V_{CC}	−9	−3	−1	mA
I_{OL}	LOW-level output current	V_{RXD} = 0.4 V; bus dominant	2	5	12	mA

All information provided in this document is subject to legal disclaimers.

© NXP Semiconductors N.V. 2018. All rights reserved.

Table 7. Static characteristics *...continued*

T_{vj} = −40 °C to +150 °C; V_{CC} = 4.5 V to 5.5 V; V_{IO} = 2.8 V to 5.5 V; R_L = 60 Ω unless specified otherwise; all voltages are defined with respect to ground; positive currents flow into the device[1].

Symbol	Parameter	Conditions	Min	Typ	Max	Unit
Bus lines; pins CANH1, CANL1, CANH2 and CANL2						
$V_{O(dom)}$	dominant output voltage	V_{TXD} = 0 V; t < $t_{to(dom)TXD}$				
		pin CANH1/CANH2; R_L = 50 Ω to 65 Ω	2.75	3.5	4.5	V
		pin CANL1/CANL2; R_L = 50 Ω to 65 Ω	0.5	1.5	2.25	V
$V_{dom(TX)sym}$	transmitter dominant voltage symmetry	$V_{dom(TX)sym} = V_{CC} - V_{CANH}$[7] $- V_{CANL}$[8]	−300	-	+300	mV
V_{TXsym}	transmitter voltage symmetry	$V_{TXsym} = V_{CANH}$[7] $+ V_{CANL}$[8]; [5] [9] C_{SPLIT} = 4.7 nF; f_{TXD} = 250 kHz, 1 MHz and 2.5 MHz; V_{CC} = 4.75 V to 5.25 V	$0.9V_{CC}$	-	$1.1V_{CC}$	V
$V_{O(dif)}$	differential output voltage	dominant: Normal mode				
		V_{TXD} = 0 V; t < $t_{to(dom)TXD}$; V_{CC} = 4.75 V to 5.25 V R_L = 45 Ω to 65 Ω	1.5	-	3	V
		V_{TXD} = 0 V; t < $t_{to(dom)TXD}$; V_{CC} = 4.75 V to 5.25 V R_L = 45 Ω to 70 Ω	1.5	-	3.3	V
		V_{TXD} = 0 V; t < $t_{to(dom)TXD}$; V_{CC} = 4.75 V to 5.25 V R_L = 2240 Ω	1.5	-	5	V
		recessive				
		Normal mode: $V_{TXD} = V_{IO}$; no load	−50	-	+50	mV
		Standby mode	−0.2	-	+0.2	V
$V_{O(rec)}$	recessive output voltage	recessive; no load				
		Normal mode; $V_{TXD} = V_{IO}$	2	$0.5V_{CC}$	3	V
		Standby mode	−0.1	-	+0.1	V
$V_{th(RX)dif}$	differential receiver threshold voltage	Normal mode: −30 V ≤ V_{CANL} ≤ +30 V; −30 V ≤ V_{CANH} ≤ +30 V	0.5	0.7	0.9	V
		Standby mode; −12 V ≤ V_{CANL} ≤ +12 V; −12 V ≤ V_{CANH} ≤ +12 V	0.4	0.7	1.15	V
$V_{rec(RX)}$	receiver recessive voltage	Normal mode; −30 V ≤ V_{CANL} ≤ +30 V; −30 V ≤ V_{CANH} ≤ +30 V	−4	-	0.5	V
		Standby mode; −12 V ≤ V_{CANL} ≤ +12 V; −12 V ≤ V_{CANH} ≤ +12 V	−4	-	0.4	V
$V_{dom(RX)}$	receiver dominant voltage	Normal mode; −30 V ≤ V_{CANL} ≤ +30 V; −30 V ≤ V_{CANH} ≤ +30 V	0.9	-	9.0	V
		Standby mode; −12 V ≤ V_{CANL} ≤ +12 V; −12 V ≤ V_{CANH} ≤ +12 V	1.15	-	9.0	V

All information provided in this document is subject to legal disclaimers.

© NXP Semiconductors N.V. 2018. All rights reserved.

Table 7. Static characteristics *...continued*

T_{vj} = –40 °C to +150 °C; V_{CC} = 4.5 V to 5.5 V; V_{IO} = 2.8 V to 5.5 V; R_L = 60 Ω unless specified otherwise; all voltages are defined with respect to ground; positive currents flow into the device[1].

Symbol	Parameter	Conditions	Min	Typ	Max	Unit
$V_{hys(RX)dif}$	differential receiver hysteresis voltage	Normal mode: –30 V ≤ V_{CANL} ≤ +30 V; –30 V ≤ V_{CANH} ≤ +30 V	50	120	200	mV
$I_{O(sc)dom}$	dominant short-circuit output current	V_{TXD} = 0 V; t < $t_{to(dom)TXD}$; V_{CC} = 5 V				
		pin CANH1/CANH2; V_{CANH} = –15 V to +40 V	–100	–70	–40	mA
		pin CANL1/CANL2; V_{CANL} = –15 V to +40 V	40	70	100	mA
$I_{O(sc)rec}$	recessive short-circuit output current	Normal mode; V_{TXD} = V_{IO}; V_{CANH} = V_{CANL} = –40 V to +40 V	–5	-	+5	mA
I_L	leakage current	V_{CC} = V_{IO} = 0 V or V_{CC} = V_{IO} = shorted to ground via 47 kΩ; V_{CANH} = V_{CANL} = 5 V	–5	-	+5	μA
R_i	input resistance	–2 V ≤ V_{CANL} ≤ +7 V; –2 V ≤ V_{CANH} ≤ +7 V	9	15	28	kΩ
ΔR_i	input resistance deviation	0 V ≤ V_{CANL} ≤ +5 V; 0 V ≤ V_{CANH} ≤ +5 V	–1	-	+1	%
$R_{i(dif)}$	differential input resistance	–2 V ≤ V_{CANL} ≤ +7 V; –2 V ≤ V_{CANH} ≤ +7 V	19	30	52	kΩ
$C_{i(cm)}$	common-mode input capacitance	[5]	-	-	20	pF
$C_{i(dif)}$	differential input capacitance	[5]	-	-	10	pF
Temperature detection						
$T_{j(sd)}$	shutdown junction temperature	[5]	-	190	-	°C

[1] All parameters are guaranteed over the virtual junction temperature range by design. Factory testing uses correlated test conditions to cover the specified temperature and power supply voltage range.

[2] TXD refers to the input signal on pin TXD1 or pin TXD2.

[3] Total supply current (I_{CC} + I_{IO}) in Standby mode is typically 17 μA, with a maximum value of 26 μA.

[4] STBN refers to the input signal on pin STBN1 or pin STBN2.

[5] Not tested in production; guaranteed by design.

[6] RXD refers to the output signal on pin RXD1 or pin RXD2.

[7] CANH refers to the input/output signal on pin CANH1 or pin CANH2.

[8] CANL refers to the input/output signal on pin CANL1 or pin CANL2.

[9] The test circuit used to measure the bus output voltage symmetry (which includes CSPLIT) is shown in Figure 9.

All information provided in this document is subject to legal disclaimers.

© NXP Semiconductors N.V. 2018. All rights reserved.

11. Dynamic characteristics

Table 8. Dynamic characteristics

T_{vj} = −40 °C to +150 °C; V_{CC} = 4.5 V to 5.5 V; V_{IO} = 2.8 V to 5.5 V; R_L = 60 Ω unless specified otherwise; all voltages are defined with respect to ground; positive currents flow into the device[1].

Symbol	Parameter	Conditions		Min	Typ	Max	Unit
Transceiver timing; pins CANH1, CANH2, CANL1, CANL2, TXD1, TXD2, RXD1 and RXD2; see Figure 8 and Figure 5							
$t_{d(TXD-busdom)}$	delay time from TXD to bus dominant	Normal mode		-	65	-	ns
$t_{d(TXD-busrec)}$	delay time from TXD to bus recessive	Normal mode		-	90	-	ns
$t_{d(busdom-RXD)}$	delay time from bus dominant to RXD	Normal mode		-	60	-	ns
$t_{d(busrec-RXD)}$	delay time from bus recessive to RXD	Normal mode		-	65	-	ns
$t_{d(TXDL-RXDL)}$	delay time from TXD LOW to RXD LOW	Normal mode		60	-	250	ns
$t_{d(TXDH-RXDH)}$	delay time from TXD HIGH to RXD HIGH	Normal mode		60	-	250	ns
$t_{bit(bus)}$	transmitted recessive bit width	$t_{bit(TXD)}$ = 500 ns	[2]	435	-	530	ns
		$t_{bit(TXD)}$ = 200 ns	[2]	155	-	210	ns
$t_{bit(RXD)}$	bit time on pin RXD	$t_{bit(TXD)}$ = 500 ns	[2]	400	-	550	ns
		$t_{bit(TXD)}$ = 200 ns	[2]	120	-	220	ns
Δt_{rec}	receiver timing symmetry	$t_{bit(TXD)}$ = 500 ns		−65	-	+40	ns
		$t_{bit(TXD)}$ = 200 ns		−45	-	+15	ns
$t_{to(dom)TXD}$	TXD dominant time-out time	V_{TXD} = 0 V; Normal mode	[3]	0.5	2	5	ms
$t_{d(stb-norm)}$	standby to normal mode delay time			7	25	47	µs
$t_{wake(busdom)}$	bus dominant wake-up time	Standby mode		0.5	-	5	µs
$t_{wake(busrec)}$	bus recessive wake-up time	Standby mode		0.5	-	5	µs
$t_{to(wake)bus}$	bus wake-up time-out time			0.5	2	5	ms
$t_{fltr(wake)bus}$	bus wake-up filter time	Standby mode		0.5	1.5	5	µs

[1] All parameters are guaranteed over the virtual junction temperature range by design. Factory testing uses correlated test conditions to cover the specified temperature and power supply voltage range.

[2] See Figure 6.

[3] Minimum value of 0.8 ms required according to SAE J2284; 0.3 ms is allowed according to ISO11898-2:2016 for legacy devices.

All information provided in this document is subject to legal disclaimers.

© NXP Semiconductors N.V. 2018. All rights reserved.

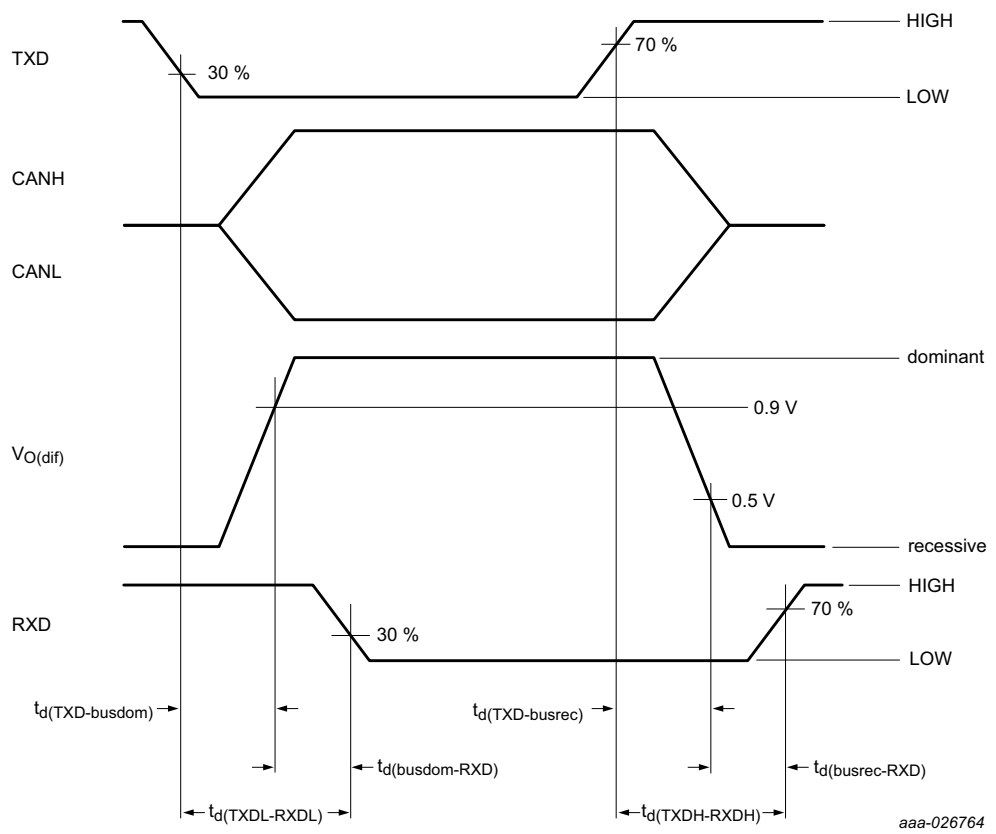

Fig 5. CAN transceiver timing diagram

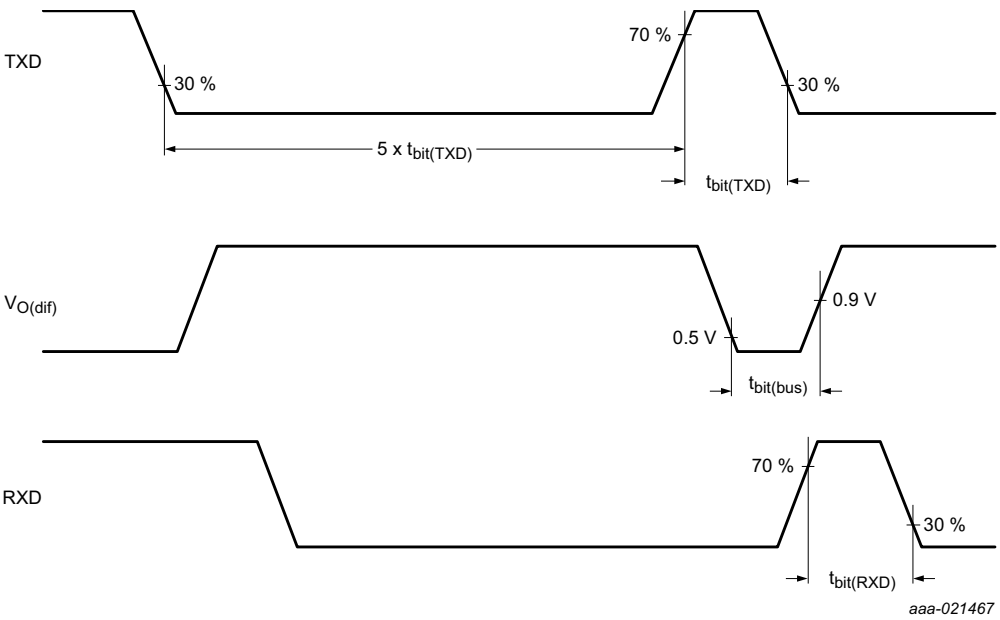

Fig 6. CAN FD timing definitions according to ISO 11898-2:2016

All information provided in this document is subject to legal disclaimers.

© NXP Semiconductors N.V. 2018. All rights reserved.

12. Application information

12.1 Application diagram

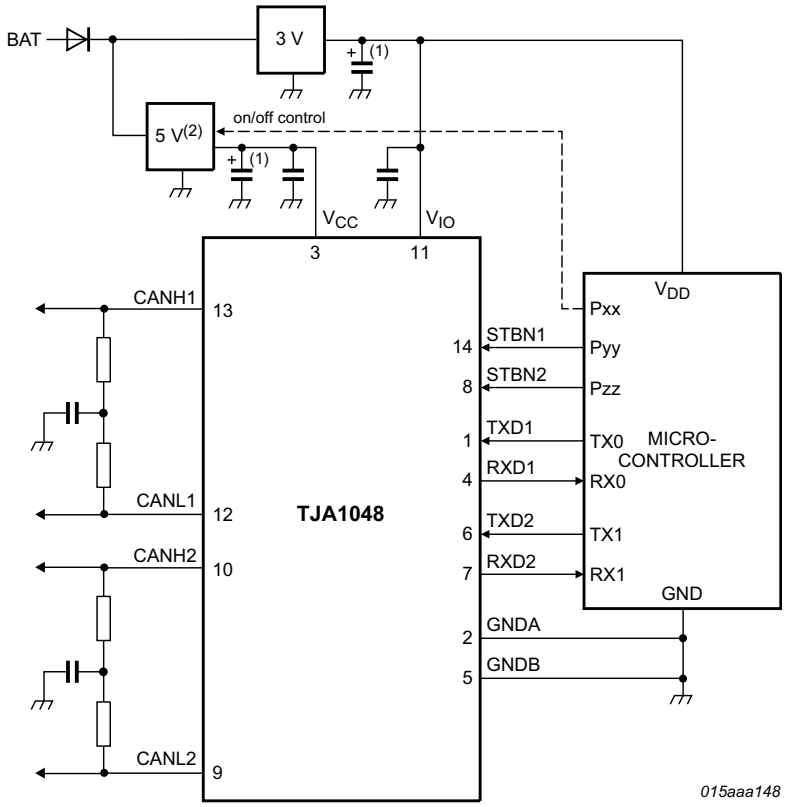

(1) Optional, depends on regulator.

(2) The 5 V supply can, optionally, be switched off in Standby mode.

Fig 7. Typical application with 3 V microcontroller

12.2 Application hints

Further information on the application of the TJA1048 can be found in NXP application hints *AH1014 Application Hints - Standalone high speed CAN transceiver TJA1042/TJA1043/TJA1048/TJA1051.*

All information provided in this document is subject to legal disclaimers.

© NXP Semiconductors N.V. 2018. All rights reserved.

13. Test information

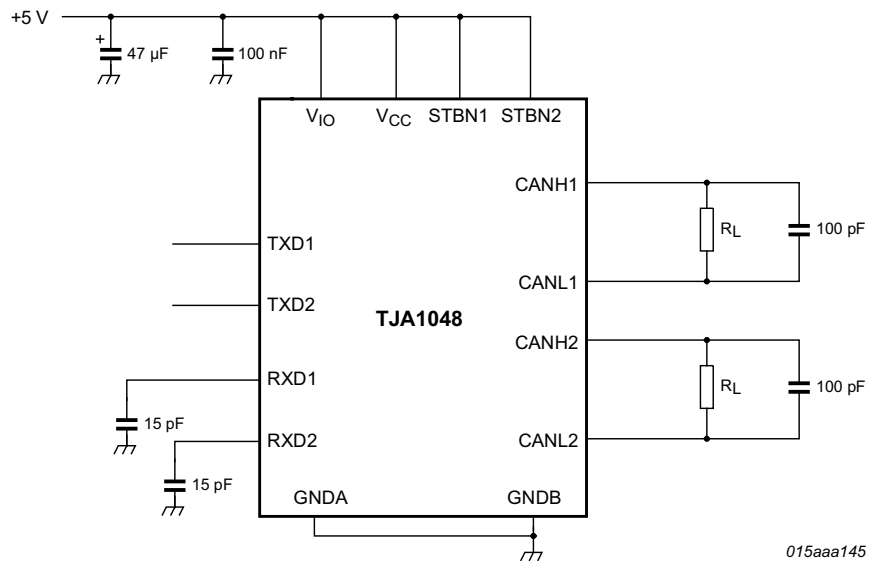

Fig 8. Timing test circuit for CAN transceiver

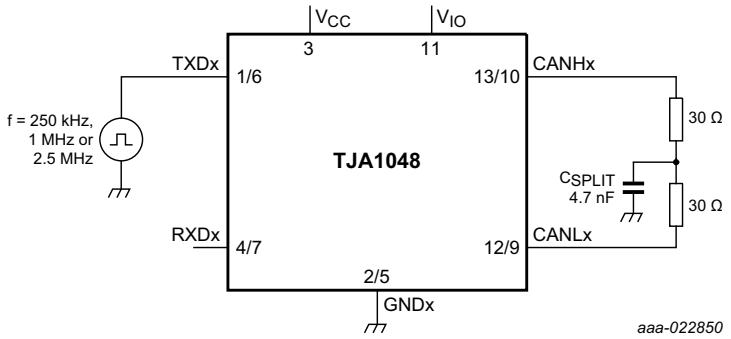

Fig 9. Test circuit for measuring transceiver driver symmetry

13.1 Quality information

This product has been qualified in accordance with the Automotive Electronics Council (AEC) standard *Q100 Rev-G - Failure mechanism based stress test qualification for integrated circuits*, and is suitable for use in automotive applications.

All information provided in this document is subject to legal disclaimers.

© NXP Semiconductors N.V. 2018. All rights reserved.

14. Package outline

SO14: plastic small outline package; 14 leads; body width 3.9 mm **SOT108-1**

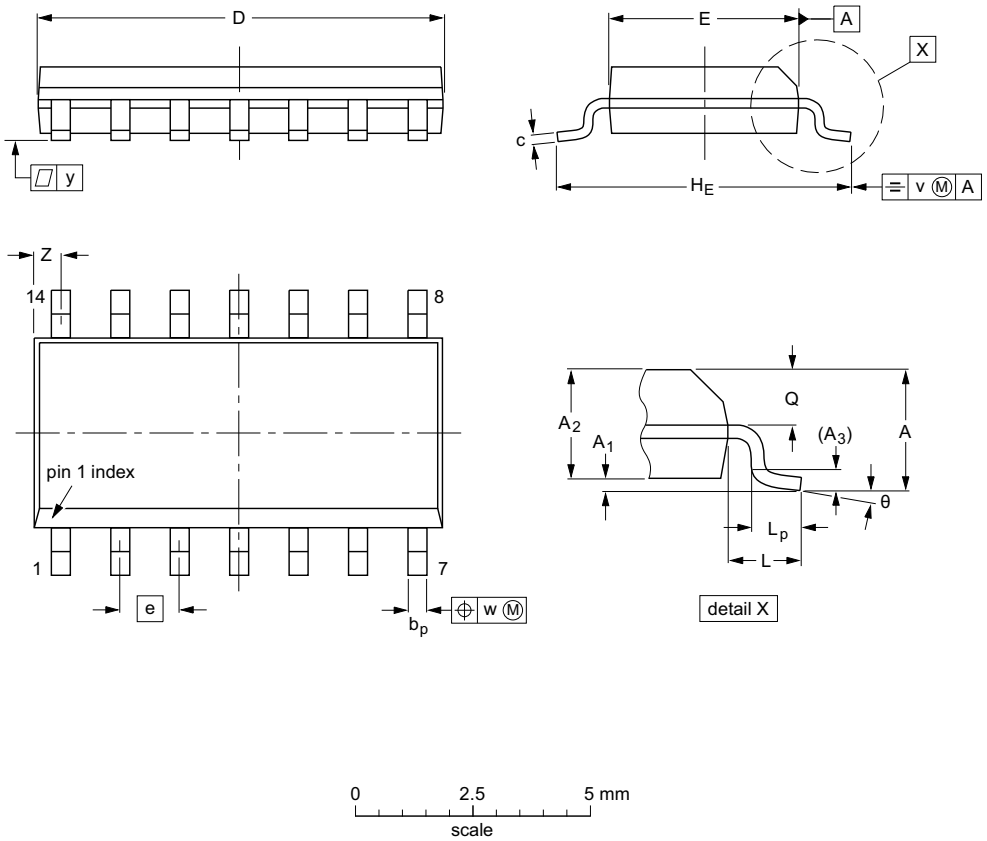

DIMENSIONS (inch dimensions are derived from the original mm dimensions)

UNIT	A max.	A_1	A_2	A_3	b_p	c	D(1)	E(1)	e	H_E	L	L_p	Q	v	w	y	Z(1)	θ
mm	1.75	0.25 0.10	1.45 1.25	0.25	0.49 0.36	0.25 0.19	8.75 8.55	4.0 3.8	1.27	6.2 5.8	1.05	1.0 0.4	0.7 0.6	0.25	0.25	0.1	0.7 0.3	8° 0°
inches	0.069	0.010 0.004	0.057 0.049	0.01	0.019 0.014	0.0100 0.0075	0.35 0.34	0.16 0.15	0.05	0.244 0.228	0.041	0.039 0.016	0.028 0.024	0.01	0.01	0.004	0.028 0.012	

Note

1. Plastic or metal protrusions of 0.15 mm (0.006 inch) maximum per side are not included.

OUTLINE VERSION	REFERENCES				EUROPEAN PROJECTION	ISSUE DATE
	IEC	JEDEC	JEITA			
SOT108-1	076E06	MS-012				~~99-12-27~~ 03-02-19

Fig 10. Package outline SOT108 (SO14)

All information provided in this document is subject to legal disclaimers.

© NXP Semiconductors N.V. 2018. All rights reserved.

HVSON14: plastic, thermal enhanced very thin small outline package; no leads; 14 terminals; body 3 x 4.5 x 0.85 mm **SOT1086-2**

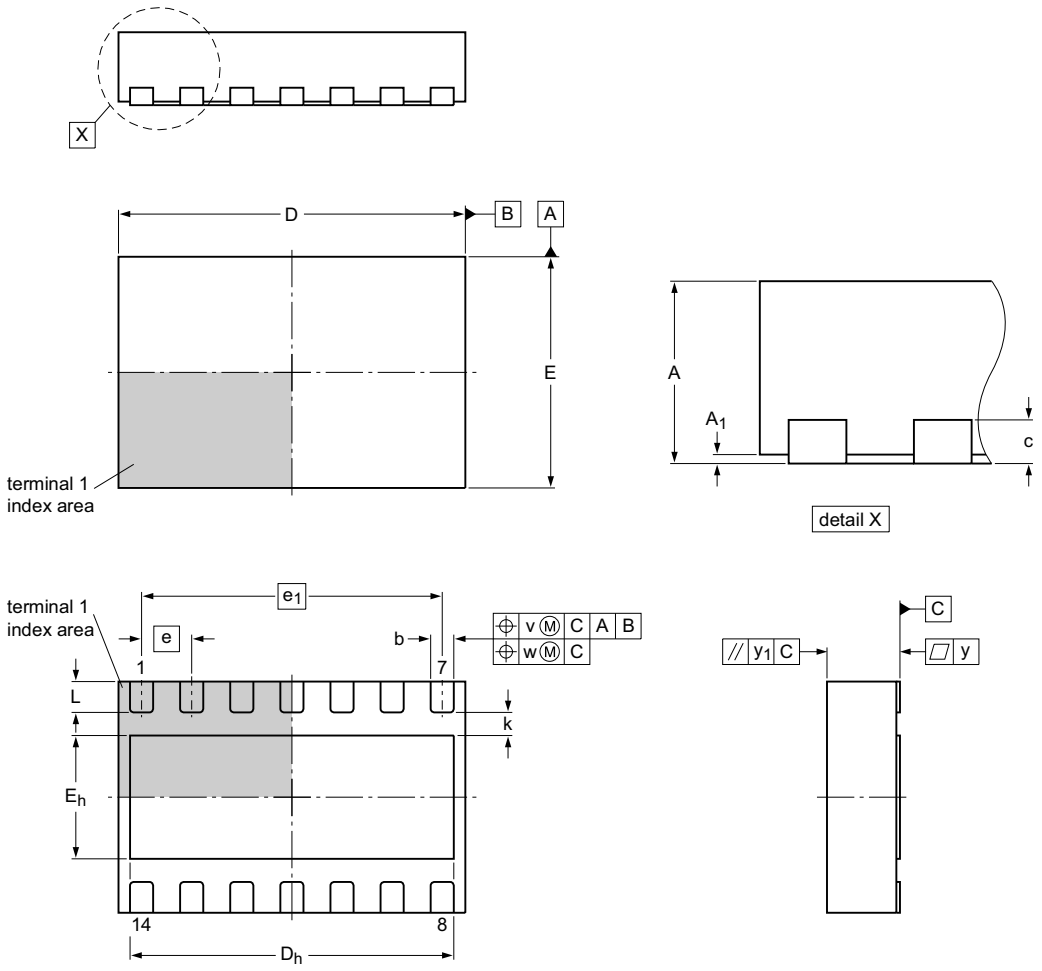

0 2.5 5 mm
scale

Dimensions

Unit		A	A_1	b	c	D	D_h	E	E_h	e	e_1	k	L	v	w	y	y_1
mm	max	1.00	0.05	0.35		4.6	4.25	3.1	1.65			0.35	0.45				
	nom	0.85	0.03	0.32	0.2	4.5	4.20	3.0	1.60	0.65	3.9	0.30	0.40	0.1	0.05	0.05	0.1
	min	0.80	0.00	0.29		4.4	4.15	2.9	1.55			0.25	0.35				

sot1086-2

Outline version	References				European projection	Issue date
	IEC	JEDEC	JEITA			
SOT1086-2	- - -	MO-229	- - -			~~10-07-14~~ 10-07-15

Fig 11. Package outline SOT1086 (HVSON14)

All information provided in this document is subject to legal disclaimers.

© NXP Semiconductors N.V. 2018. All rights reserved.

15. Handling information

All input and output pins are protected against ElectroStatic Discharge (ESD) under normal handling. When handling ensure that the appropriate precautions are taken as described in *JESD625-A* or equivalent standards.

16. Soldering of SMD packages

This text provides a very brief insight into a complex technology. A more in-depth account of soldering ICs can be found in Application Note *AN10365 "Surface mount reflow soldering description"*.

16.1 Introduction to soldering

Soldering is one of the most common methods through which packages are attached to Printed Circuit Boards (PCBs), to form electrical circuits. The soldered joint provides both the mechanical and the electrical connection. There is no single soldering method that is ideal for all IC packages. Wave soldering is often preferred when through-hole and Surface Mount Devices (SMDs) are mixed on one printed wiring board; however, it is not suitable for fine pitch SMDs. Reflow soldering is ideal for the small pitches and high densities that come with increased miniaturization.

16.2 Wave and reflow soldering

Wave soldering is a joining technology in which the joints are made by solder coming from a standing wave of liquid solder. The wave soldering process is suitable for the following:

- Through-hole components
- Leaded or leadless SMDs, which are glued to the surface of the printed circuit board

Not all SMDs can be wave soldered. Packages with solder balls, and some leadless packages which have solder lands underneath the body, cannot be wave soldered. Also, leaded SMDs with leads having a pitch smaller than ~0.6 mm cannot be wave soldered, due to an increased probability of bridging.

The reflow soldering process involves applying solder paste to a board, followed by component placement and exposure to a temperature profile. Leaded packages, packages with solder balls, and leadless packages are all reflow solderable.

Key characteristics in both wave and reflow soldering are:

- Board specifications, including the board finish, solder masks and vias
- Package footprints, including solder thieves and orientation
- The moisture sensitivity level of the packages
- Package placement
- Inspection and repair
- Lead-free soldering versus SnPb soldering

16.3 Wave soldering

Key characteristics in wave soldering are:

All information provided in this document is subject to legal disclaimers.

© NXP Semiconductors N.V. 2018. All rights reserved.

- Process issues, such as application of adhesive and flux, clinching of leads, board transport, the solder wave parameters, and the time during which components are exposed to the wave
- Solder bath specifications, including temperature and impurities

16.4 Reflow soldering

Key characteristics in reflow soldering are:

- Lead-free versus SnPb soldering; note that a lead-free reflow process usually leads to higher minimum peak temperatures (see Figure 12) than a SnPb process, thus reducing the process window
- Solder paste printing issues including smearing, release, and adjusting the process window for a mix of large and small components on one board
- Reflow temperature profile; this profile includes preheat, reflow (in which the board is heated to the peak temperature) and cooling down. It is imperative that the peak temperature is high enough for the solder to make reliable solder joints (a solder paste characteristic). In addition, the peak temperature must be low enough that the packages and/or boards are not damaged. The peak temperature of the package depends on package thickness and volume and is classified in accordance with Table 9 and 10

Table 9. SnPb eutectic process (from J-STD-020D)

Package thickness (mm)	Package reflow temperature (°C)	
	Volume (mm^3)	
	< 350	≥ 350
< 2.5	235	220
≥ 2.5	220	220

Table 10. Lead-free process (from J-STD-020D)

Package thickness (mm)	Package reflow temperature (°C)		
	Volume (mm^3)		
	< 350	350 to 2000	> 2000
< 1.6	260	260	260
1.6 to 2.5	260	250	245
> 2.5	250	245	245

Moisture sensitivity precautions, as indicated on the packing, must be respected at all times.

Studies have shown that small packages reach higher temperatures during reflow soldering, see Figure 12.

All information provided in this document is subject to legal disclaimers.

© NXP Semiconductors N.V. 2018. All rights reserved.

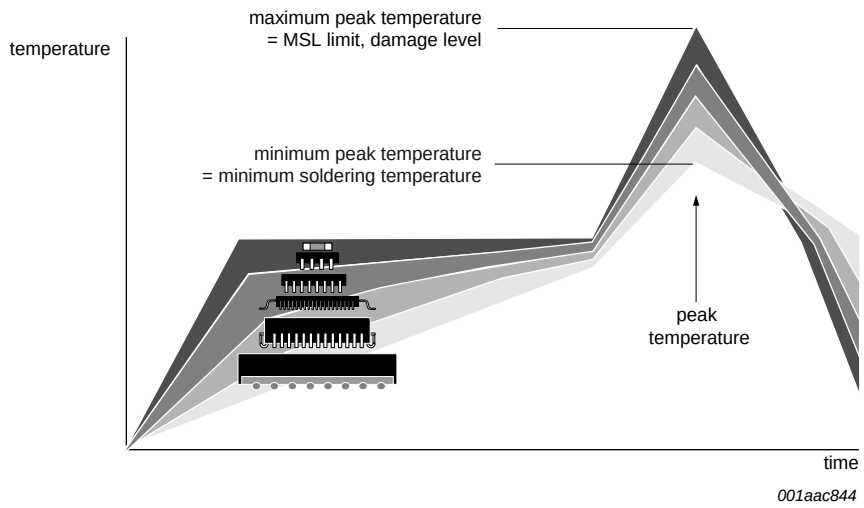

MSL: Moisture Sensitivity Level

Fig 12. Temperature profiles for large and small components

For further information on temperature profiles, refer to Application Note *AN10365 "Surface mount reflow soldering description"*.

17. Soldering of HVSON packages

Section 17 contains a brief introduction to the techniques most commonly used to solder Surface Mounted Devices (SMD). A more detailed discussion on soldering HVSON leadless package ICs can found in the following application notes:

- *AN10365 'Surface mount reflow soldering description"*
- *AN10366 "HVQFN application information"*Section 16

All information provided in this document is subject to legal disclaimers.

© NXP Semiconductors N.V. 2018. All rights reserved.

18. Appendix: ISO 11898-2:2016 parameter cross-reference list

Table 11. ISO 11898-2:2016 to NXP data sheet parameter conversion

ISO 11898-2:2016		NXP data sheet	
Parameter	**Notation**	**Symbol**	**Parameter**
HS-PMA dominant output characteristics			
Single ended voltage on CAN_H	V_{CAN_H}	$V_{O(dom)}$	dominant output voltage
Single ended voltage on CAN_L	V_{CAN_L}		
Differential voltage on normal bus load	V_{Diff}	$V_{O(dif)}$	differential output voltage
Differential voltage on effective resistance during arbitration			
Optional: Differential voltage on extended bus load range			
HS-PMA driver symmetry			
Driver symmetry	V_{SYM}	V_{TXsym}	transmitter voltage symmetry
Maximum HS-PMA driver output current			
Absolute current on CAN_H	I_{CAN_H}	$I_{O(sc)dom}$	dominant short-circuit output current
Absolute current on CAN_L	I_{CAN_L}		
HS-PMA recessive output characteristics, bus biasing active/inactive			
Single ended output voltage on CAN_H	V_{CAN_H}	$V_{O(rec)}$	recessive output voltage
Single ended output voltage on CAN_L	V_{CAN_L}		
Differential output voltage	V_{Diff}	$V_{O(dif)}$	differential output voltage
Optional HS-PMA transmit dominant timeout			
Transmit dominant timeout, long	t_{dom}	$t_{to(dom)TXD}$	TXD dominant time-out time
Transmit dominant timeout, short			
HS-PMA static receiver input characteristics, bus biasing active/inactive			
Recessive state differential input voltage range Dominant state differential input voltage range	V_{Diff}	$V_{th(RX)dif}$	differential receiver threshold voltage
		$V_{rec(RX)}$	receiver recessive voltage
		$V_{dom(RX)}$	receiver dominant voltage
HS-PMA receiver input resistance (matching)			
Differential internal resistance	R_{Diff}	$R_{i(dif)}$	differential input resistance
Single ended internal resistance	R_{CAN_H} R_{CAN_L}	R_i	input resistance
Matching of internal resistance	MR	ΔR_i	input resistance deviation
HS-PMA implementation loop delay requirement			
Loop delay	t_{Loop}	$t_{d(TXDH-RXDH)}$	delay time from TXD HIGH to RXD HIGH
		$t_{d(TXDL-RXDL)}$	delay time from TXD LOW to RXD LOW
Optional HS-PMA implementation data signal timing requirements for use with bit rates above 1 Mbit/s up to 2 Mbit/s and above 2 Mbit/s up to 5 Mbit/s			
Transmitted recessive bit width @ 2 Mbit/s / @ 5 Mbit/s, intended	$t_{Bit(Bus)}$	$t_{bit(bus)}$	transmitted recessive bit width
Received recessive bit width @ 2 Mbit/s / @ 5 Mbit/s	$t_{Bit(RXD)}$	$t_{bit(RXD)}$	bit time on pin RXD
Receiver timing symmetry @ 2 Mbit/s / @ 5 Mbit/s	Δt_{Rec}	Δt_{rec}	receiver timing symmetry

All information provided in this document is subject to legal disclaimers.

© NXP Semiconductors N.V. 2018. All rights reserved.

Table 11. ISO 11898-2:2016 to NXP data sheet parameter conversion

ISO 11898-2:2016		NXP data sheet	
Parameter	**Notation**	**Symbol**	**Parameter**
HS-PMA maximum ratings of V_{CAN_H}, V_{CAN_L} and V_{Diff}			
Maximum rating V_{Diff}	V_{Diff}	$V_{(CANH-CANL)}$	voltage between pin CANH and pin CANL
General maximum rating V_{CAN_H} and V_{CAN_L}	V_{CAN_H} V_{CAN_L}	V_x	voltage on pin x
Optional: Extended maximum rating VCAN_H and VCAN_L			
HS-PMA maximum leakage currents on CAN_H and CAN_L, unpowered			
Leakage current on CAN_H, CAN_L	I_{CAN_H} I_{CAN_L}	I_L	leakage current
HS-PMA bus biasing control timings			
CAN activity filter time, long	t_{Filter}	$t_{wake(busdom)}$[1]	bus dominant wake-up time
CAN activity filter time, short		$t_{wake(busrec)}$[1]	bus recessive wake-up time
Wake-up timeout, short	t_{Wake}	$t_{to(wake)bus}$	bus wake-up time-out time
Wake-up timeout, long			
Timeout for bus inactivity	$t_{Silence}$	$t_{to(silence)}$	bus silence time-out time
Bus Bias reaction time	t_{Bias}	$t_{d(busact-bias)}$	delay time from bus active to bias

[1] $t_{fltr(wake)bus}$ - bus wake-up filter time, in devices with basic wake-up functionality

All information provided in this document is subject to legal disclaimers.

© NXP Semiconductors N.V. 2018. All rights reserved.

19. Revision history

Table 12. Revision history

Document ID	Release date	Data sheet status	Change notice	Supersedes
TJA1048 v.6	20180319	Product data sheet	-	TJA1048 v.5
Modifications:	• Updated to comply with ISO 11898-2:2016 and SAE J22884-1 through SAE J2284-5 specifications: – Section 1: text amended (2nd last paragraph) – Section 2.1: text amended (2nd entry) – Table 7: values/conditions changed for parameters I_{CC}, V_{TXsym}, $V_{O(dif)}$, $V_{O(dom)}$, $V_{O(rec)}$, $V_{rec(RX)}$, $V_{dom(RX)}$, $I_{O(sc)dom}$, I_{OH} for pins RXDx; measurement conditions added to parameters R_i, ΔR_i and $R_{i(dif)}$ – Table 7: additional measurements taken at f_{TXD} = 1 MHz and 2.5 MHz for parameter V_{TXsym}; see Figure 9 – Table 8: Table note 3 added – Figure 6: title changed • Amended Figure 5, Figure 7 and Figure 9			
TJA1048 v.5	20160523	Product data sheet	-	TJA1048 v.4
TJA1048 v.4	20150115	Product data sheet	-	TJA1048 v.3
TJA1048 v.3	20130424	Product data sheet	-	TJA1048 v.2
TJA1048 v.2	20110325	Product data sheet	-	TJA1048 v.1
TJA1048 v.1	20101103	Product data sheet	-	-

All information provided in this document is subject to legal disclaimers.

© NXP Semiconductors N.V. 2018. All rights reserved.

20. Legal information

20.1 Data sheet status

Document status[1][2]	Product status[3]	Definition
Objective [short] data sheet	Development	This document contains data from the objective specification for product development.
Preliminary [short] data sheet	Qualification	This document contains data from the preliminary specification.
Product [short] data sheet	Production	This document contains the product specification.

[1] Please consult the most recently issued document before initiating or completing a design.

[2] The term 'short data sheet' is explained in section "Definitions".

[3] The product status of device(s) described in this document may have changed since this document was published and may differ in case of multiple devices. The latest product status information is available on the Internet at URL http://www.nxp.com.

20.2 Definitions

Draft — The document is a draft version only. The content is still under internal review and subject to formal approval, which may result in modifications or additions. NXP Semiconductors does not give any representations or warranties as to the accuracy or completeness of information included herein and shall have no liability for the consequences of use of such information.

Short data sheet — A short data sheet is an extract from a full data sheet with the same product type number(s) and title. A short data sheet is intended for quick reference only and should not be relied upon to contain detailed and full information. For detailed and full information see the relevant full data sheet, which is available on request via the local NXP Semiconductors sales office. In case of any inconsistency or conflict with the short data sheet, the full data sheet shall prevail.

Product specification — The information and data provided in a Product data sheet shall define the specification of the product as agreed between NXP Semiconductors and its customer, unless NXP Semiconductors and customer have explicitly agreed otherwise in writing. In no event however, shall an agreement be valid in which the NXP Semiconductors product is deemed to offer functions and qualities beyond those described in the Product data sheet.

20.3 Disclaimers

Limited warranty and liability — Information in this document is believed to be accurate and reliable. However, NXP Semiconductors does not give any representations or warranties, expressed or implied, as to the accuracy or completeness of such information and shall have no liability for the consequences of use of such information. NXP Semiconductors takes no responsibility for the content in this document if provided by an information source outside of NXP Semiconductors.

In no event shall NXP Semiconductors be liable for any indirect, incidental, punitive, special or consequential damages (including - without limitation - lost profits, lost savings, business interruption, costs related to the removal or replacement of any products or rework charges) whether or not such damages are based on tort (including negligence), warranty, breach of contract or any other legal theory.

Notwithstanding any damages that customer might incur for any reason whatsoever, NXP Semiconductors' aggregate and cumulative liability towards customer for the products described herein shall be limited in accordance with the *Terms and conditions of commercial sale* of NXP Semiconductors.

Right to make changes — NXP Semiconductors reserves the right to make changes to information published in this document, including without limitation specifications and product descriptions, at any time and without notice. This document supersedes and replaces all information supplied prior to the publication hereof.

Suitability for use in automotive applications — This NXP Semiconductors product has been qualified for use in automotive applications. Unless otherwise agreed in writing, the product is not designed, authorized or warranted to be suitable for use in life support, life-critical or safety-critical systems or equipment, nor in applications where failure or malfunction of an NXP Semiconductors product can reasonably be expected to result in personal injury, death or severe property or environmental damage. NXP Semiconductors and its suppliers accept no liability for inclusion and/or use of NXP Semiconductors products in such equipment or applications and therefore such inclusion and/or use is at the customer's own risk.

Applications — Applications that are described herein for any of these products are for illustrative purposes only. NXP Semiconductors makes no representation or warranty that such applications will be suitable for the specified use without further testing or modification.

Customers are responsible for the design and operation of their applications and products using NXP Semiconductors products, and NXP Semiconductors accepts no liability for any assistance with applications or customer product design. It is customer's sole responsibility to determine whether the NXP Semiconductors product is suitable and fit for the customer's applications and products planned, as well as for the planned application and use of customer's third party customer(s). Customers should provide appropriate design and operating safeguards to minimize the risks associated with their applications and products.

NXP Semiconductors does not accept any liability related to any default, damage, costs or problem which is based on any weakness or default in the customer's applications or products, or the application or use by customer's third party customer(s). Customer is responsible for doing all necessary testing for the customer's applications and products using NXP Semiconductors products in order to avoid a default of the applications and the products or of the application or use by customer's third party customer(s). NXP does not accept any liability in this respect.

Limiting values — Stress above one or more limiting values (as defined in the Absolute Maximum Ratings System of IEC 60134) will cause permanent damage to the device. Limiting values are stress ratings only and (proper) operation of the device at these or any other conditions above those given in the Recommended operating conditions section (if present) or the Characteristics sections of this document is not warranted. Constant or repeated exposure to limiting values will permanently and irreversibly affect the quality and reliability of the device.

Terms and conditions of commercial sale — NXP Semiconductors products are sold subject to the general terms and conditions of commercial sale, as published at http://www.nxp.com/profile/terms, unless otherwise agreed in a valid written individual agreement. In case an individual agreement is concluded only the terms and conditions of the respective agreement shall apply. NXP Semiconductors hereby expressly objects to applying the customer's general terms and conditions with regard to the purchase of NXP Semiconductors products by customer.

All information provided in this document is subject to legal disclaimers.

© NXP Semiconductors N.V. 2018. All rights reserved.

No offer to sell or license — Nothing in this document may be interpreted or construed as an offer to sell products that is open for acceptance or the grant, conveyance or implication of any license under any copyrights, patents or other industrial or intellectual property rights.

Export control — This document as well as the item(s) described herein may be subject to export control regulations. Export might require a prior authorization from competent authorities.

Quick reference data — The Quick reference data is an extract of the product data given in the Limiting values and Characteristics sections of this document, and as such is not complete, exhaustive or legally binding.

Translations — A non-English (translated) version of a document is for reference only. The English version shall prevail in case of any discrepancy between the translated and English versions.

20.4 Trademarks

Notice: All referenced brands, product names, service names and trademarks are the property of their respective owners.

21. Contact information

For more information, please visit: **http://www.nxp.com**

For sales office addresses, please send an email to: **salesaddresses@nxp.com**

All information provided in this document is subject to legal disclaimers.

© NXP Semiconductors N.V. 2018. All rights reserved.

22. Contents

1 General description . . . 1
2 Features and benefits . . . 1
2.1 General . . . 1
2.2 Low-power management . . . 2
2.3 Protection . . . 2
3 Quick reference data . . . 2
4 Ordering information . . . 3
5 Block diagram . . . 4
6 Pinning information . . . 5
6.1 Pinning . . . 5
6.2 Pin description . . . 5
7 Functional description . . . 6
7.1 Operating modes . . . 6
7.1.1 Normal mode . . . 6
7.1.2 Standby mode . . . 6
7.1.3 Remote wake-up (via the CAN bus) . . . 6
7.2 Fail-safe features . . . 7
7.2.1 TXD dominant time-out function . . . 7
7.2.2 Internal biasing of TXD1, TXD2, STBN1 and STBN2 input pins . . . 8
7.2.3 Undervoltage detection on pins V_{CC} and V_{IO} . . . 8
7.2.4 Overtemperature protection . . . 8
7.3 V_{IO} supply pin . . . 8
8 Limiting values . . . 9
9 Thermal characteristics . . . 9
10 Static characteristics . . . 10
11 Dynamic characteristics . . . 13
12 Application information . . . 15
12.1 Application diagram . . . 15
12.2 Application hints . . . 15
13 Test information . . . 16
13.1 Quality information . . . 16
14 Package outline . . . 17
15 Handling information . . . 19
16 Soldering of SMD packages . . . 19
16.1 Introduction to soldering . . . 19
16.2 Wave and reflow soldering . . . 19
16.3 Wave soldering . . . 19
16.4 Reflow soldering . . . 20
17 Soldering of HVSON packages . . . 21
18 Appendix: ISO 11898-2:2016 parameter cross-reference list . . . 22
19 Revision history . . . 24
20 Legal information . . . 25
20.1 Data sheet status . . . 25
20.2 Definitions . . . 25
20.3 Disclaimers . . . 25
20.4 Trademarks . . . 26
21 Contact information . . . 26
22 Contents . . . 27

Please be aware that important notices concerning this document and the product(s) described herein, have been included in section 'Legal information'.

© NXP Semiconductors N.V. 2018. All rights reserved.

For more information, please visit: http://www.nxp.com
For sales office addresses, please send an email to: salesaddresses@nxp.com

Date of release: 19 March 2018
Document identifier: TJA1048