SPECIFICATION FOR LCD MODULE

Model No. ___TM161ABA6__

Prepared by:	**Date:**
Checked by :	**Date:**
Verified by :	**Date:**
Approved by:	**Date:**

TIANMA MICROELECTRONICS CO., LTD

REVISION RECORD

Date	Ref. Page	Revision No.	Revision Items	Check & Approval

1. General Specifications:

1.1 Display type: STN

1.2 Display color*:

Display color: Blue-Black

Background: Yellow-Green

1.3 Polarizer mode: Reflective/Positive

1.4 Viewing Angle: 6:00

1.5 Driving Method: 1/16 Duty 1/5 Bias

1.6 Backlight: None

* Color tone is slightly changed by temperature and driving voltage.

1.7 Display Fonts: 5 x 7 dots+Cursor (1 Character)

1.8 Data Transfer: 8 Bit Parallel

1.9 Operating Temperature: 0----+50℃

Storage Temperature: -20----+60℃

1.10 Outline Dimensions: Refer to outline drawing on next page

1.11 Dot Matrix: 16 Characters X 1 Line

1.12 Dot Size: 0.60X0.70(mm)

1.13 Dot Pitch: 0.65X0.75 (mm)

1.14 Weight: 18g

2. Outline Drawing

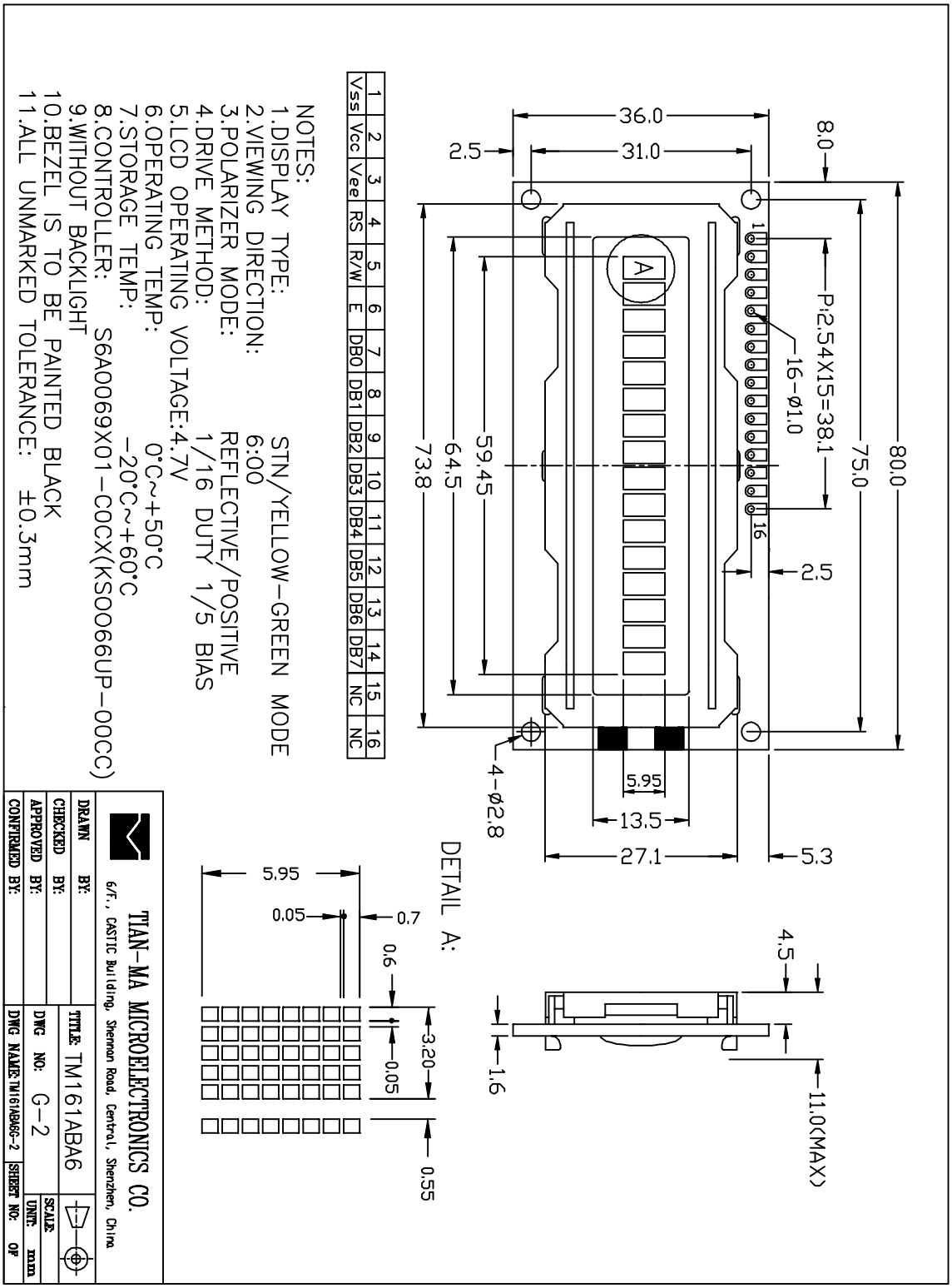

3. LCD Module Part Numbering System

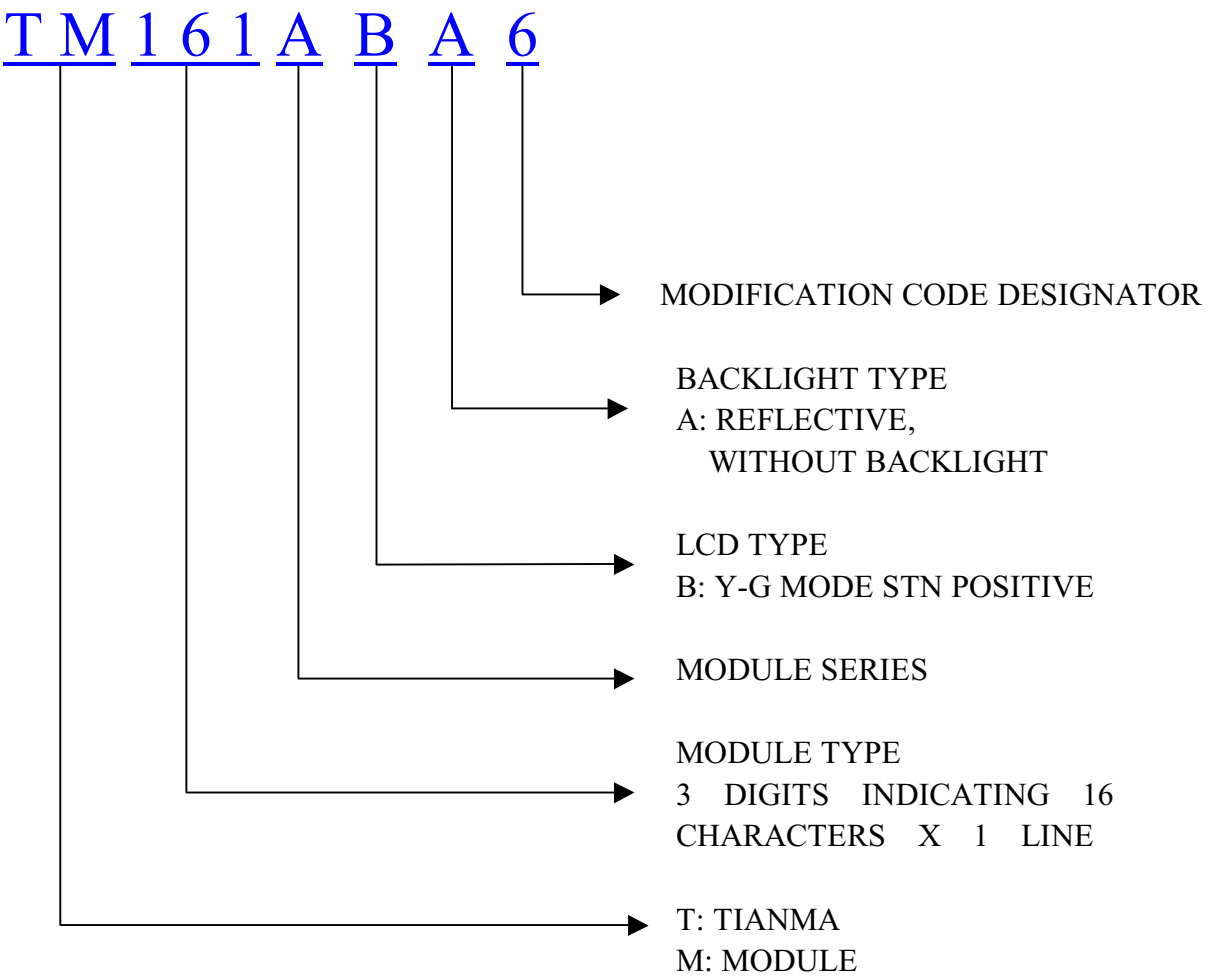

4. Circuit Block Diagram

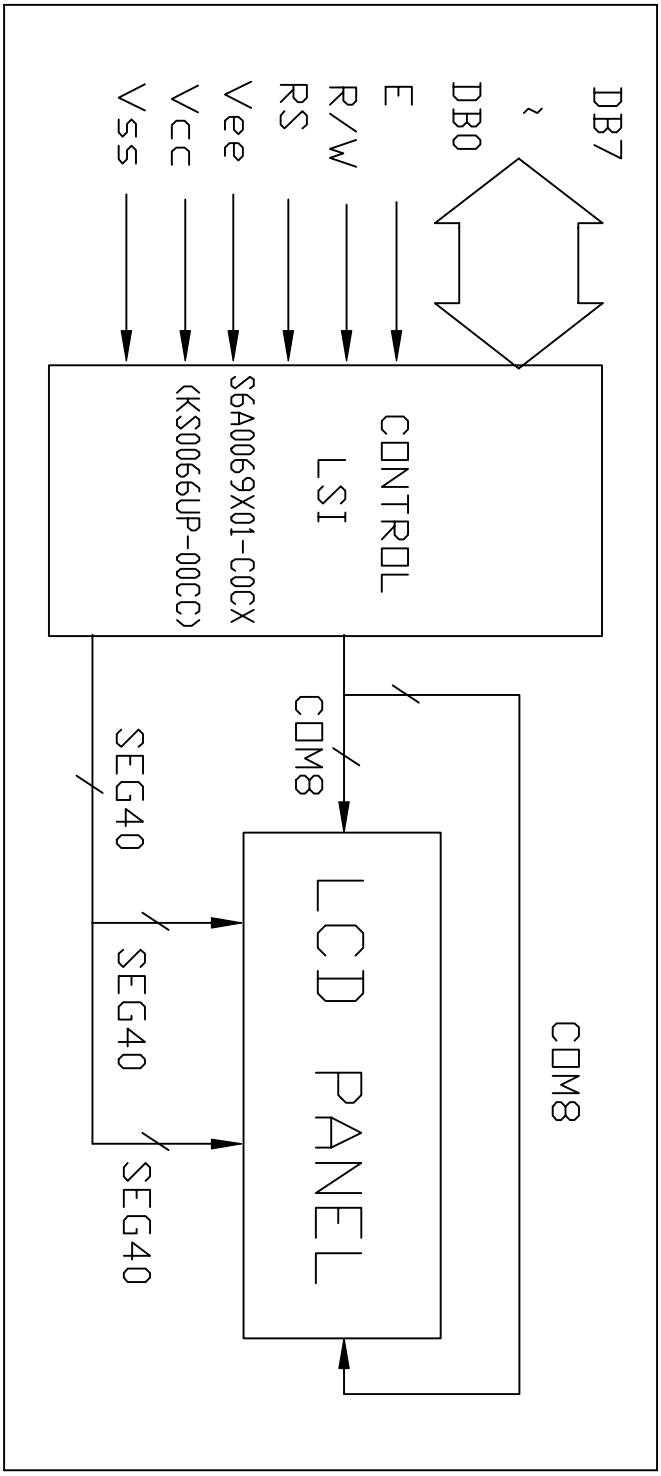

5. Absolute Maximum Ratings

Item	Symbol	Min.	Max.	Unit	Remark
Power Supply Voltage	$V_{DD}-V_{SS}$	-0.3	7.0	V	
LCD Driving Voltage	V_{LCD}	-0.3	13.0		
Operating Temperature Range	T_{OP}	0	+50	℃	No Condensation
Storage Temperature Range	T_{ST}	-20	+60		

6. Electrical Specifications and Instruction Code

6.1 Electrical characteristics

Item		Symbol	Min.	Typ.	Max.	Unit
Supply Voltage (Logic)		$V_{DD}-V_{SS}$	4.5	5.0	5.5	V
Supply Voltage (LCD Drive)		V_{LCD}	-	4.7	-	V
Input Signal Voltage	High	V_{IH} (V_{DD}=5.0)	$0.7V_{DD}$	-	V_{DD}+0.3	V
	Low	V_{IL} (V_{DD}=5.0)	-0.3	-	$0.2\ V_{DD}$	V
Supply current (Logic)		I_{DD} ($V_{DD}-V_{SS}$ =5.0)	-	-	1.0	mA
Supply current (LCD Drive)		I_{EE}	-	-	0.4	mA

6.2 Interface Signals

Pin No.	Symbol	Level	Description
1	Vss	0V	Ground
2	Vcc	5.0V	Power supply voltage for logic and LCD(+)
3	Vee	0.3V	Power supply voltage for LCD(-)
4	RS	H/L	Selects registers
5	R/W	H/L	Selects read or write
6	E	H/L	Starts data read/write
7	DB0	H/L	Data bit0
8	DB1	H/L	Data bit1
9	DB2	H/L	Data bit2
10	DB3	H/L	Data bit3
11	DB4	H/L	Data bit4
12	DB5	H/L	Data bit5
13	DB6	H/L	Data bit6
14	DB7	H/L	Data bit7
15	NC	-	No signal
16	NC	-	No signal

6.3 Interface Timing Chart

AC Characteristics(V_{DD}=4.5V~5.5V,Ta=-30~+85℃)

Mode	Characteristic	Symbol	Min.	Typ.	Max.	Unit
Write Mode (Refer to Fig-6)	E Cycle Time	tc	500	-	-	ns
	E Rise / Fall Time	t_R,t_F	-	-	20	
	E Pulse Width (High, Low)	tw	230	-	-	
	R/W and RS Setup Time	tsu1	40	-	-	
	R/W and RS Hold Time	t_{H1}	10	-	-	
	Data Setup Time	tsu2	80	-	-	
	Data Hold Time	t_{H2}	10	-	-	
Read Mode (Refer to Fig-7)	E Cycle Time	tc	500	-	-	ns
	E Rise / Fall Time	t_R,t_F	-	-	20	
	E Pulse Width (High, Low)	tw	230	-	-	
	R/W and RS Setup Time	tsu	40	-	-	
	R/W and RS Hold Time	t_H	10	-	-	
	Data Output Delay Time	t_D	-	-	120	
	Data Hold Time	t_{DH}	5	-	-	

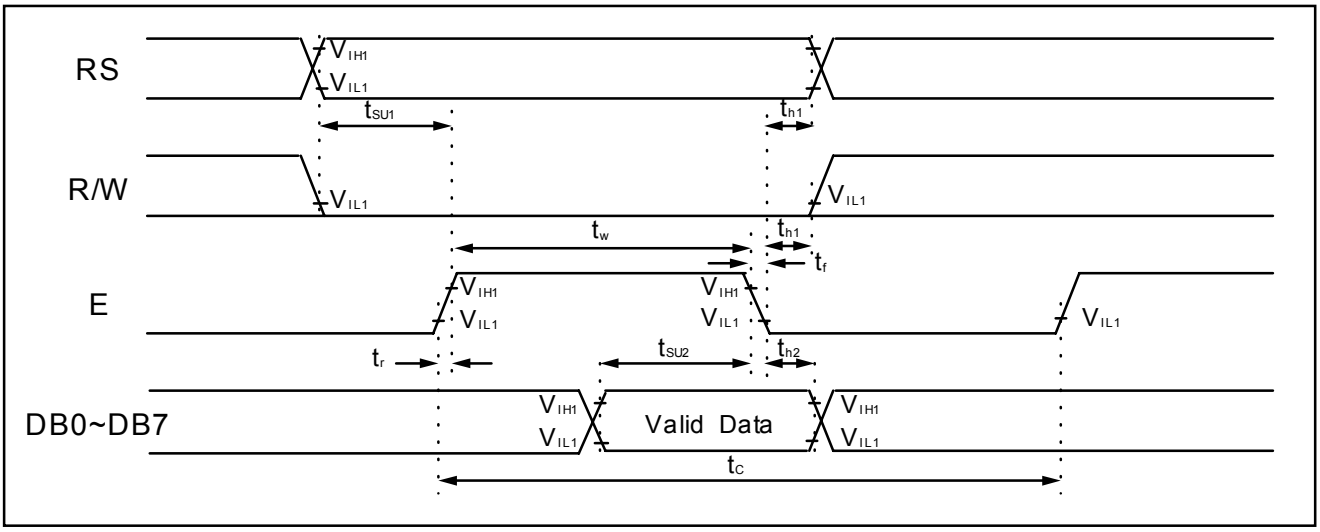

Figure 6 . Write Mode Timing Diagram

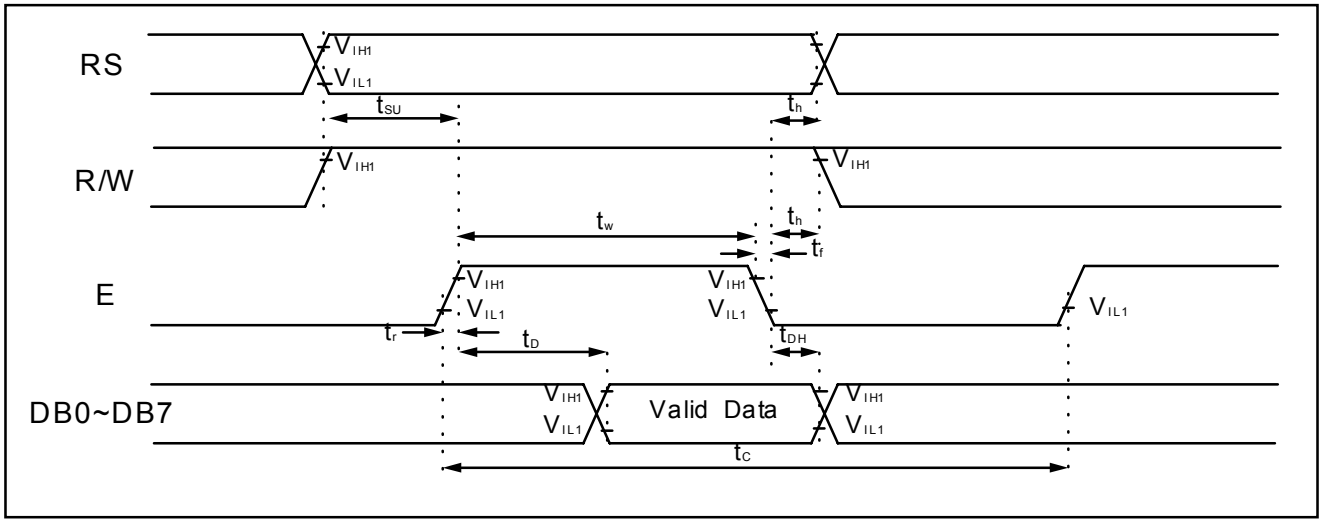

Figure 7 . Read Mode Timing Diagram

6.4 Instruction Code

Instruction Table

Instruction	Instruction Code										Description	Execution time (fosc= 270 kHz)
	RS	R/W	DB7	DB6	DB5	DB4	DB3	DB2	DB1	DB0		
Clear Display	0	0	0	0	0	0	0	0	0	1	Write “20H” to DDRAM and set DDRAM address to “00H” from AC	1.53 ms
Return Home	0	0	0	0	0	0	0	0	1	-	Set DDRAM address to “00H” from AC and return cursor to its original position if shifted. The contents of DDRAM are not changed.	1.53 ms
Entry Mode Set	0	0	0	0	0	0	0	1	I/D	SH	Assign cursor moving direction and enable the shift of entire display.	39 μs
Display ON/ OFF Control	0	0	0	0	0	0	1	D	C	B	Set display(D), cursor(C), and blinking of cursor(B) on/off control bit.	39 μs
Cursor or Display Shift	0	0	0	0	0	1	S/C	R/L	-	-	Set cursor moving and display shift control bit, and the direction, without changing of DDRAM data.	39 μs
Function Set	0	0	0	0	1	DL	N	F	-	-	Set interface data length (DL: 8-bit/4-bit), numbers of display line (N: 2-line/1-line) and, display font type (F:5×11dots/5×8 dots)	39 μs
Set CGRAM Address	0	0	0	1	AC5	AC4	AC3	AC2	AC1	AC0	Set CGRAM address in address counter.	39 μs
Set DDRAM Address	0	0	1	AC6	AC5	AC4	AC3	AC2	AC1	AC0	Set DDRAM address in address counter.	39 μs
Read Busy Flag and Address	0	1	BF	AC6	AC5	AC4	AC3	AC2	AC1	AC0	Whether during internal operation or not can be known by reading BF. The contents of address counter can also be read.	0 μs
Write Data to RAM	1	0	D7	D6	D5	D4	D3	D2	D1	D0	Write data into internal RAM (DDRAM/CGRAM).	43 μs
Read Data from RAM	1	1	D7	D6	D5	D4	D3	D2	D1	D0	Read data from internal RAM (DDRAM/CGRAM).	43 μs

* “-“: don’t care

NOTE: When an MPU program with checking the Busy Flag(DB7) is made, it must be necessary 1/2Fosc is necessary for executing the next instruction by the falling edge of the 'E' signal after the Busy Flag (DB7) goes to “Low”.

6.5 Character generator ROM (KS0066U-00)

Upper 4bit / Lower 4bit	LLLL	LLLH	LLHL	LLHH	LHLL	LHLH	LHHL	LHHH	HLLL	HLLH	HLHL	HLHH	HHLL	HHLH	HHHL	HHHH
LLLL	CG RAM (1)															
LLLH	(2)															
LLHL	(3)															
LLHH	(4)															
LHLL	(5)															
LHLH	(6)															
LHHL	(7)															
LHHH	(8)															
HLLL	(1)															
HLLH	(2)															
HLHL	(3)															
HLHH	(4)															
HHLL	(5)															
HHLH	(6)															
HHHL	(7)															
HHHH	(8)															

7. Optical Characteristics

7.1 Optical Characteristics Ta=25℃

Item		Symbol	Condition		Min.	Typ.	Max.	Unit
Viewing Angle		θ_x	$C_r \geq 2$	$\theta_y=0°$	-35	--	20	Deg
		θ_y		$\theta_x=0°$	-30	--	30	
Contrast Ratio		C_r	$\theta_x=0°$ $\theta_y=0°$		4.0	-	-	
Response Time	Turn on	T_{on}	$\theta_x=0°$ $\theta_y=0°$		-	-	250	ms
	Turn off	T_{off}			-	-	250	

7.2 Definition of Optical Characteristics

7.2.1 Definition of Viewing Angle

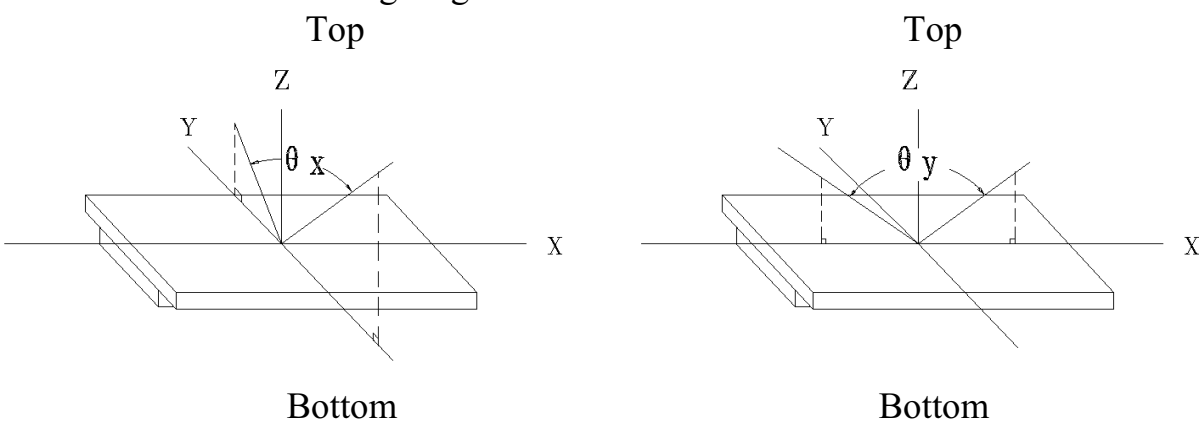

7.2.2 Definition of Contrast Ratio

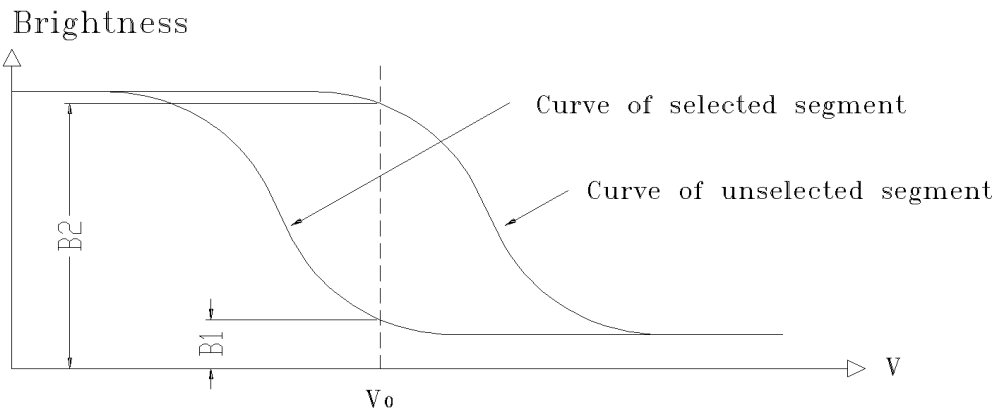

$$\text{Contrast Ratio} = B2/B1 = \frac{\text{unselected state brightness}}{\text{selected state brightness}}$$

Measuring Conditions:

1) Ambient Temperature: 25℃; 2) Frame frequency: 64Hz

7.2.3 Definition of Response time

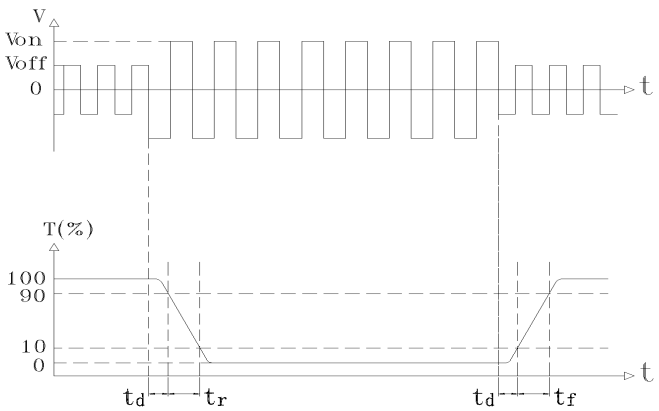

Turn on time: $t_{on} = t_d + t_r$ Turn off time: $t_{off} = t_d + t_f$

Measuring Condition:

1) Operating Voltage: 4.7V 2) Frame frequency: 64Hz

8. Reliability

8.1 Content of Reliability Test Ta=25℃

No.	Test Item	Content of Test	Test condition
1	High Temperature Storage	Endurance test applying the high storage temperature for a long time	60℃ 96H
2	Low Temperature Storage	Endurance test applying the low storage temperature for a long time	-20℃ 96H
3	High Temperature Operation	Endurance test applying the electric stress (voltage & current) and the thermal stress to the element for a long time	50℃ 96H
4	Low Temperature Operation	Endurance test applying the electric stress under low temperature for a long time	0℃ 96H
5	High Temperature /Humidity Storage	Endurance test applying the high temperature and high humidity storage for a long time	40℃ 90%RH 96H
6	Temperature Cycle	Endurance test applying the low and high temperature cycle -20℃←→25℃←→60℃←→25℃ 30min 5min 30min 5min ←——————————→ 1 cycle	-20℃/60℃ 10 cycles
7	Vibration Test (package state)	Endurance test applying the vibration during transportation	10Hz~150Hz, 50m/s^2, 40min
8	Shock Test (package state)	Endurance test applying the shock during transportation	Half- sine wave, 100m/s^2, 11ms
9	Atmospheric Pressure Test	Endurance test applying the atmospheric pressure during transportation by air	40kPa 16H

8.2 Failure Judgment Criterion

Criterion Item	Test Item No.									Failure Judgement Criterion
	1	2	3	4	5	6	7	8	9	
Basic Specification	√	√	√	√	√	√	√	√	√	Out of the basic Specification
Electrical specification	√	√	√	√	√					Out of the electrical specification
Mechanical Specification							√	√		Out of the mechanical specification
Optical Characteristic	√	√	√	√	√	√			√	Out of the optical specification
Note	For test item refer to 8.1									
Remark	Basic specification = Optical specification + Mechanical specification									

9. QUALITY LEVEL

Examination or Test	At Ta=25℃ (unless otherwise stated)	Inspection				
		Min.	Max.	Unit	IL	AQL
External Visual Inspection	Under normal illumination and eyesight condition, the distance between eyes and LCD is 25cm.	See Appendix A			II	Major 1.0 Minor 2.5
Display Defects	Under normal illumination and eyesight condition, display on inspection.	See Appendix B			II	Major 1.0 Minor 2.5
Note: Major defects: Open segment or common, Short, Serious damages, Leakage Miner defects: Others Sampling standard conforms to GB2828						

10. Precautions for Use of LCD Modules

10.1 Handling Precautions

10.1.1 The display panel is made of glass. Do not subject it to a mechanical shock by dropping it from a high place, etc.

10.1.2 If the display panel is damaged and the liquid crystal substance inside it leaks out, be sure not to get any in your mouth, if the substance comes into contact with your skin or clothes, promptly wash it off using soap and water.

10.1.3 Do not apply excessive force to the display surface or the adjoining areas since this may cause the color tone to vary.

10.1.4 The polarizer covering the display surface of the LCD module is soft and easily scratched. Handle this polarizer carefully.

10.1.5 If the display surface is contaminated, breathe on the surface and gently wipe it with a soft dry cloth. If still not completely clear, moisten cloth with one of the following solvents:

- Isopropyl alcohol
- Ethyl alcohol

Solvents other than those mentioned above may damage the polarizer. Especially, do not use the following:

- Water
- Ketone
- Aromatic solvents

10.1.6 Do not attempt to disassemble the LCD Module.

10.1.7 If the logic circuit power is off, do not apply the input signals.

10.1.8 To prevent destruction of the elements by static electricity, be careful to maintain an optimum work environment.

a. Be sure to ground the body when handling the LCD Modules.

b. Tools required for assembly, such as soldering irons, must be properly ground.

c. To reduce the amount of static electricity generated, do not conduct assembly and other work under dry conditions.

d. The LCD Module is coated with a film to protect the display surface. Be care when peeling off this protective film since static electricity may be generated.

10.2 Storage precautions

10.2.1 When storing the LCD modules, avoid exposure to direct sunlight or to the light of fluorescent lamps.

10.2.2 The LCD modules should be stored under the storage temperature range. If the LCD modules will be stored for a long time, the recommend condition is:

Temperature : 0℃ ～ 40℃

Relatively humidity: ≤80%

10.2.3 The LCD modules should be stored in the room without acid, alkali and harmful gas.

10.3 The LCD modules should be no falling and violent shocking during transportation, and also should avoid excessive press, water, damp and sunshine.

Appendix A

Inspection items and criteria for appearance defects

Items	Contents	Criteria		
Leakage		Not permitted		
Rainbow		According to the limit specimen		
Polarizer	Wrong polarizer attachment	Not permitted		
	Bubble between polarizer and glass	Not counted	Max. 3 defects allowed	
		$\phi<0.3$mm	$0.3\text{mm}\leqslant\phi\leqslant0.5$mm	
	Scratches of polarizer	According to the limit specimen		
Black spot (in viewing area)	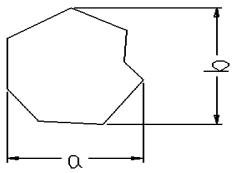	Not counted	Max. 3 spots allowed	Max. 3 spots (lines) allowed
		X<0.2mm	$0.2\text{mm}\leqslant X\leqslant0.5$mm	
		X=(a+b)/2		
Black line (in viewing area)	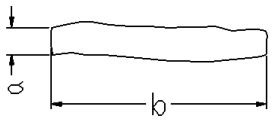	Not counted	Max. 3 lines allowed	
		a<0.02mm	$0.02\text{mm}\leqslant a\leqslant0.05$mm $b\leqslant2.0$mm	
Progressive cracks	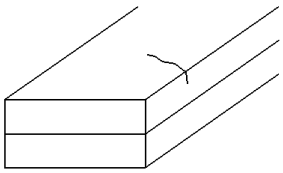	Not permitted		

Appendix B

Inspection items and criteria for display defects

Items	Contents	Criteria		
Open segment or open common		Not permitted		
Short		Not permitted		
Wrong viewing angle		Not permitted		
Contrast radio uneven		According to the limit specimen		
Crosstalk		According to the limit specimen		
Pin holes and cracks in segment (DOT)	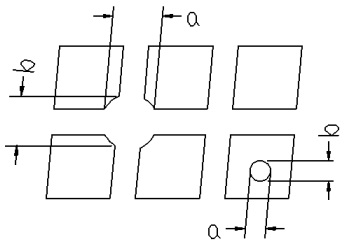	Not counted	Max.3 dots allowed	Max.3 dots allowed
		X<0.1mm	0.1mm≤X≤0.2mm	
		X=(a+b)/2		
	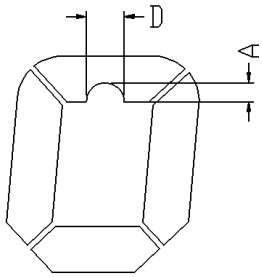	Not counted	Max.2 dots allowed	
		A<0.1mm	0.1mm≤A≤0.2mm D<0.25mm	
Black spot (in viewing area)	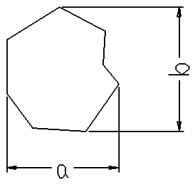	Not counted	Max.3 spots allowed	Max.3 spots (lines) allowed
		X<0.1mm	0.1mm≤X≤0.2mm	
		X=(a+b)/2		
Black line (in viewing area)	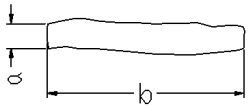	Not counted	Max.3 lines allowed	
		a<0.02mm	0.02mm≤a≤0.05mm b≤0.5mm	

Appendix B

Inspection items and criteria for display defects (continued)

Items	Content	Criteria		
Transfor-mation of segment	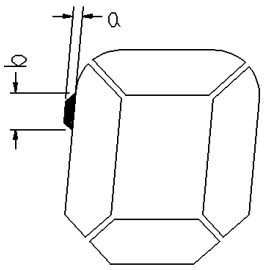	Not counted	Max. 2 defects allowed	Max.3 defects allowed
		x＜0.1mm	0.1mm≤x≤0.2mm	
		x=(a+b)/2		
	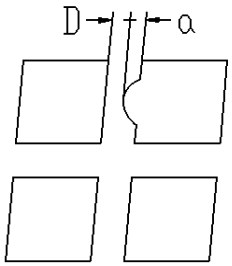	Not counted	Max. 1 defects allowed	
		a＜0.1mm	0.1mm≤a≤0.2mm D>0	
	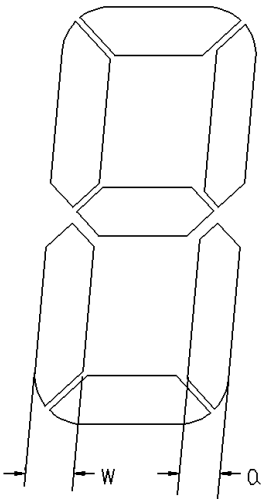	Max.2 defects allowed 0.8W≤a≤1.2W a=measured value of width W=nominal value of width		