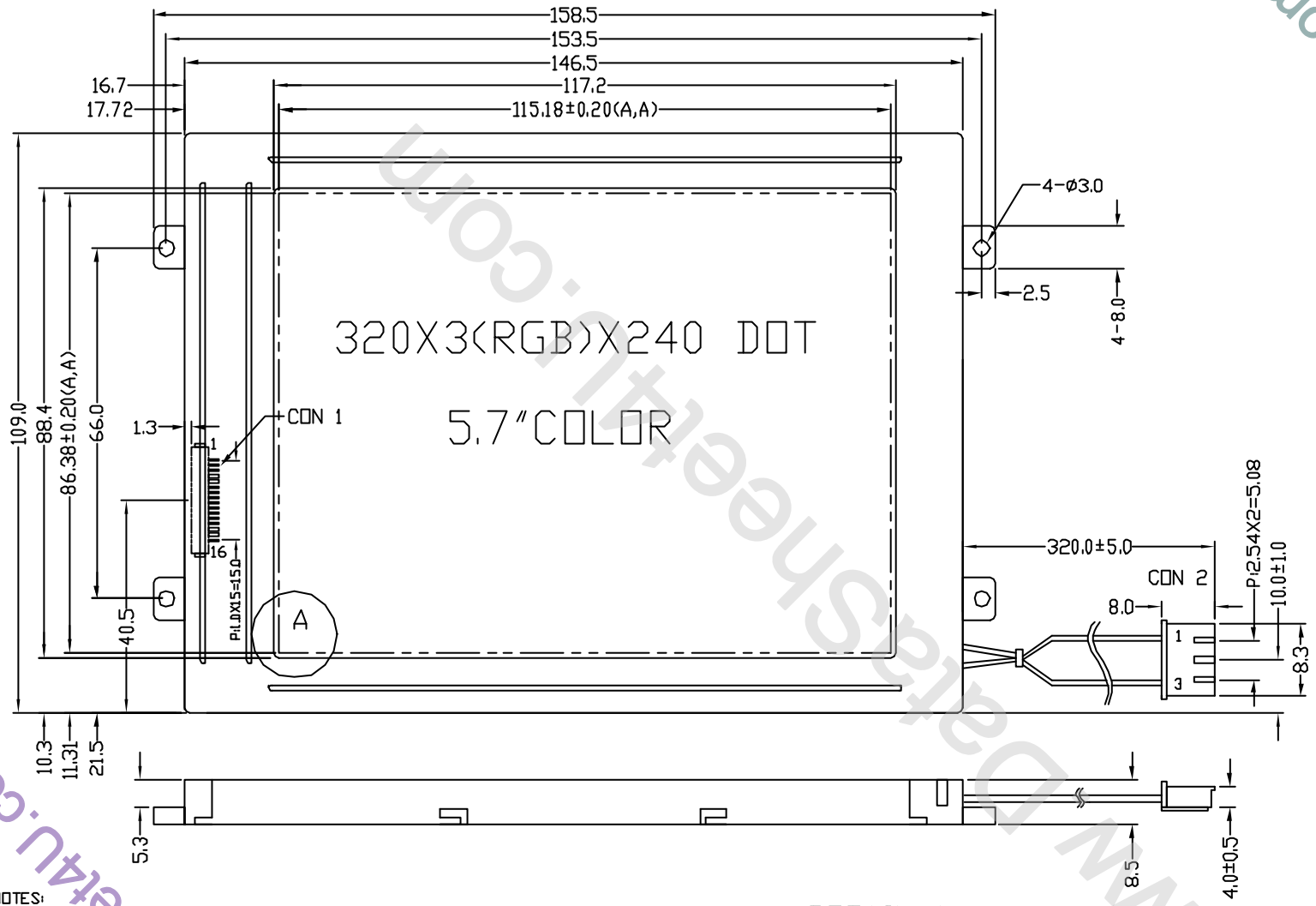

CON 1

PIN	SYMBOL
1	M
2	YD
3	LP
4	XCK
5	DISPOFF
6	VDD
7	VSS
8	VEE
9	D7
10	D6
11	D5
12	D4
13	D3
14	D2
15	D1
16	D0

CON 2

PIN	SYMBOL
1	VFL1
2	NC
3	VFL2

COLOR FILTER

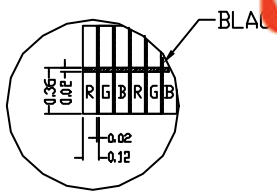

NOTES:

1. DISPLAY TYPE: COLOR STN
2. VIEWING DIRECTION: 6:00
3. POLARIZER MODE: TRANSMISSIVE/NEGATIVE
4. DRIVE METHOD: 1/240 DUTY 1/15 BIAS
5. VEE: 21.6V
6. VDD: 5.0V
7. OPERATING TEMP: -25°C~+55°C
8. STORAGE TEMP: -35°C~+65°C
9. DRIVER: LH1562F4
10. BACKLIGHT: CCFL(AC:780V(TYP.), 5mA(TYP.); WHITE)
11. BEZEL IS STAINLESS STEEL
12. ALL UNMARKED TOLERANCES: ±0.3mm

DETAIL A:

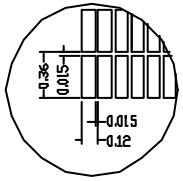

TIAN-MA MICROELECTRONICS CO.

22/F., HANGDU Building, Shennan Road, Central, Shenzhen, China

DRAWN BY:	TITLE: TM320240AKGWT3		
CHECKED BY:			SCALE:
APPROVED BY:	DWG NO: G-1		UNIT: mm
CONFIRMED BY:	DWG NAME: TM320240AKGWT3 G-1		SHEET NO: 1 OF 1

www.DataSheet4U.com
www.datasheet4u.com
液晶之友 电话: 020-33819067
Http://www.lcdfriends.com