REV.NO.	REVISED	DATE	DRAWN	CHECKED	APPROVED
0	NEW DRAW	03.08.21	KB.KIM		

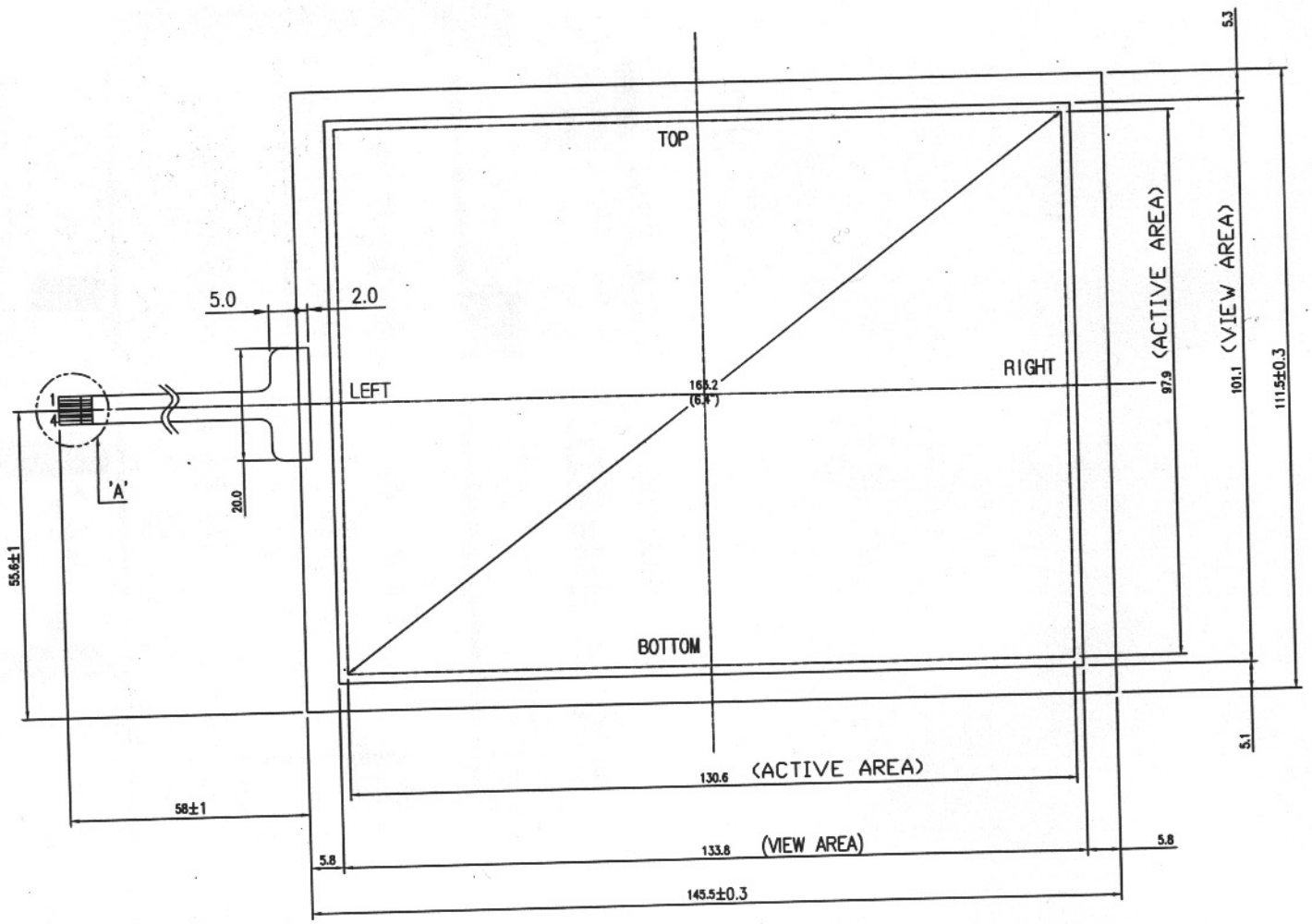

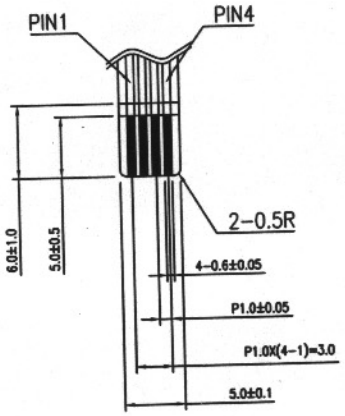

NOTE

1) FILM TYPE : Non-Glare TYPE
2) GLASS THICKNESS : 1.1t
3) FILM THICKNESS : 188 ± 10㎛
4) CONNECTOR : FPC

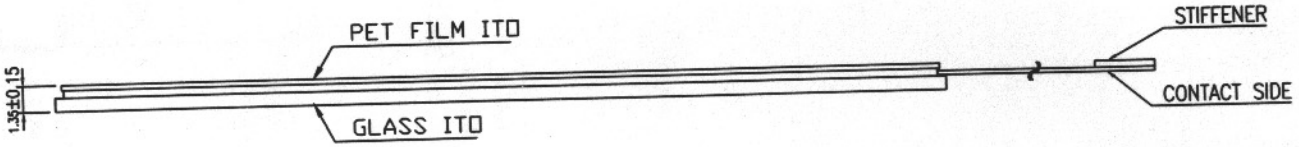

TERMINAL	
NO	SYMBOL
1	TOP
2	LEFT
3	BOTTOM
4	RIGHT

APPROVE		UNIT	mm	PROJECTION	DRAWING NO.	REV.
CHECK		SCALE	NONE			
DESIGN					DESCRIPTION	SHEET
DRAW					6.4" TOUCH PANEL	1/1

Free Datasheet http://www.datasheet4u.com