Wuxi Unigroup Microelectronics Co.,Ltd

650V Super-junction Power MOSFET

Description

650V Super-junction Power MOSFET

Super-junction power MOSFET is a revolutionary technology for high voltage power MOSFETs，designed according to the SJ principle. The deep trench SJ MOSFET provide an extremely low switching, communication and conduction losses device with highest robustness make especially resonant switching applications more reliable, more efficient, lighter and cooler, designed by Wuxi Unigroup Microelectronics Company

Features

- Ultra-fast body diode
- Very low FOM $R_{DS(on)} \times Q_g$
- Easy to use/drive
- 100% avalanche tested
- RoHS compliant

Applications

- Switch Mode Power Supply (SMPS)
- Uninterruptible Power Supply (UPS)
- Power Factor Correction (PFC)
- LLC Half-bridge
- Charger

TO-263

TO-220

TO-247

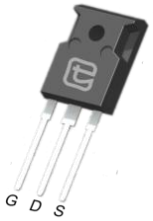

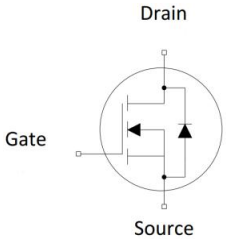

Device Marking and Package Information

Device	Package	Marking
TPB65R075DFD	TO-263	65R075DFD
TPP65R075DFD	TO-220	65R075DFD
TPW65R075DFD	TO-247	65R075DFD

Key Performance Parameters

Parameter	Value	Unit
V_{DS} @ $T_{j,max}$	700	V
$R_{DS(on),max}$	0.075	Ω
$Q_{g,typ}$	81	nC
I_D	45	A
$I_{D,pulse}$	135	A
E_{OSS} @ 400V	10.29	μJ
t_{rr}	176	ns
Q_{rr}	1.4	μC
I_{rrm}	16	A

Absolute Maximum Ratings T_C = 25ºC, unless otherwise noted				
Parameter		**Symbol**	**Values**	**Unit**
Continuous Drain Current	T_C = 25ºC	I_D	45	A
	T_C = 100ºC		27	
Pulsed Drain Current (note1)		$I_{D,pulse}$	135	A
Gate-Source Voltage		V_{GSS}	±30V	V
Single Pulse Avalanche Energy (note2)		E_{AS}	180	mJ
Repetitive Avalanche Energy (note2)		E_{AR}	144	mJ
Avalanche Current		I_{AR}	6	A
MOSFET dv/dt Ruggedness, V_{DS} = 0...650V		dv/dt	50	V/ns
Power Dissipation For TO-263,TO-220,TO-247		P_D	312	W
Continuous Diode Forward Current		I_S	45	A
Diode Pulsed Current (note1)		$I_{S,pulse}$	135	
Reverse Diode dv/dt (note3)		dv/dt	50	V/ns
Operating Junction and Storage Temperature Range		T_J, T_{stg}	-55~+150	ºC

Thermal Resistance For TO-263,TO-220,TO-247			
Parameter	**Symbol**	**Value**	**Unit**
Thermal Resistance, Junction-to-Case	R_{thJC}	0.4	ºC/W
Thermal Resistance, Junction-to-Ambient	R_{thJA}	62	

Electrical Characteristics T_J = 25ºC, unless otherwise noted						
Parameter	**Symbol**	**Test Conditions**	**Value**			**Unit**
			Min.	**Typ.**	**Max.**	
Static Characteristics						
Drain-Source Breakdown Voltage	$V_{(BR)DSS}$	V_{GS} = 0V, I_D = 250μA	650	--	--	V
Zero Gate Voltage Drain Current	I_{DSS}	V_{DS} = 650V, V_{GS} = 0V, T_J = 25ºC	--	--	10	μA
		V_{DS} = 650V, V_{GS} = 0V, T_J = 150ºC	--	--	5000	
Gate-Source Leakage Current	I_{GSS}	V_{GS} = ±30V	--	--	±100	nA
Gate-Source Threshold Voltage	$V_{GS(th)}$	V_{DS} = V_{GS}, I_D = 250μA	2.5	--	4.5	V
Drain-Source On-State-Resistance	$R_{DS(on)}$	V_{GS} = 10V, I_D = 22A	--	0.058	0.075	Ω
Gate Resistance	R_G	f = 1.0MHz open drain	--	1	--	Ω
Dynamic Characteristics						
Input Capacitance	C_{iss}	V_{GS} = 0V, V_{DS} = 100V, f = 1.0MHz	--	4640	--	pF
Output Capacitance	C_{oss}		--	123	--	
Reverse Transfer Capacitance	C_{rss}		--	3.55	--	
Total Gate Charge	Q_g	V_{DD} = 400V, I_D = 22A, V_{GS} = 10V	--	81	--	nC
Gate-Source Charge	Q_{gs}		--	25	--	
Gate-Drain Charge	Q_{gd}		--	24	--	
Turn-on Delay Time	$t_{d(on)}$	V_{DD} = 400V, I_D = 22A, R_G = 25Ω	--	107	--	ns
Turn-on Rise Time	t_r		--	80	--	
Turn-off Delay Time	$t_{d(off)}$		--	164	--	
Turn-off Fall Time	t_f		--	52	--	
Drain-Source Body Diode Characteristics						
Body Diode Forward Voltage	V_{SD}	T_J = 25ºC, I_{SD} = 22A, V_{GS} = 0V	--	0.9	1.2	V
Reverse Recovery Time	t_{rr}	V_R = 400V, I_S=22A, di_F/dt = 100A/μs	--	176	--	ns
Reverse Recovery Charge	Q_{rr}		--	1.4	--	μC
Peak Reverse Recovery Current	I_{rrm}		--	16	--	A

Notes

1. Repetitive Rating: Pulse width limited by maximum junction temperature
2. I_D = 10A, V_{DD} = 50V, R_G = 25Ω, Starting T_J = 25°C
3. Identical low side and high side switch with identical R_G

Typical Characteristics T_J = 25ºC, unless otherwise noted

Figure 1. Output Characteristics

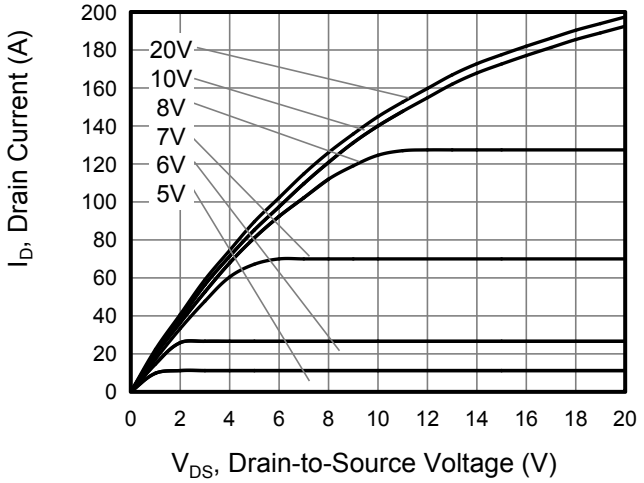

Figure 2. Transfer Characteristics

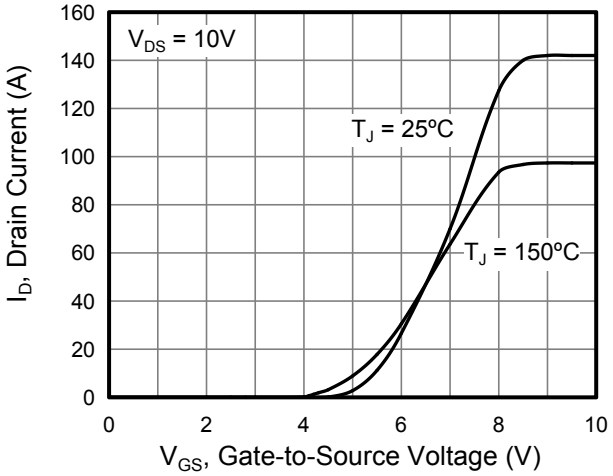

Figure 3 .On-Resistance vs. Drain Current

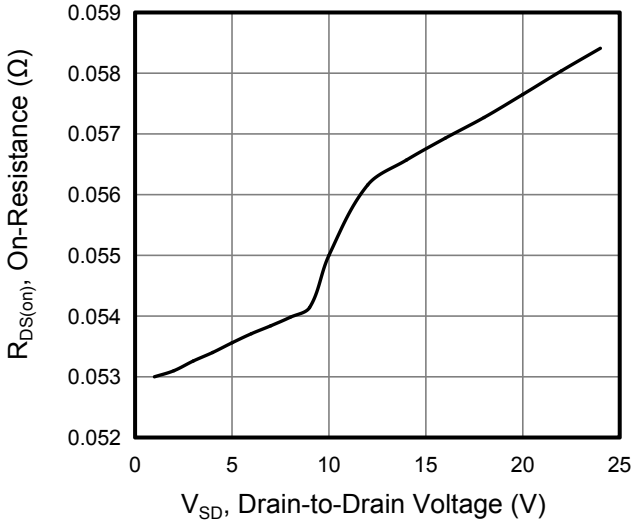

Figure 4. Capacitance

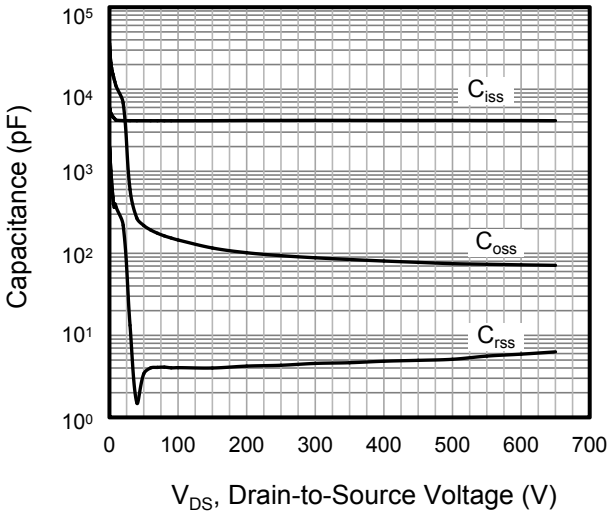

Figure 5. Gate Charge

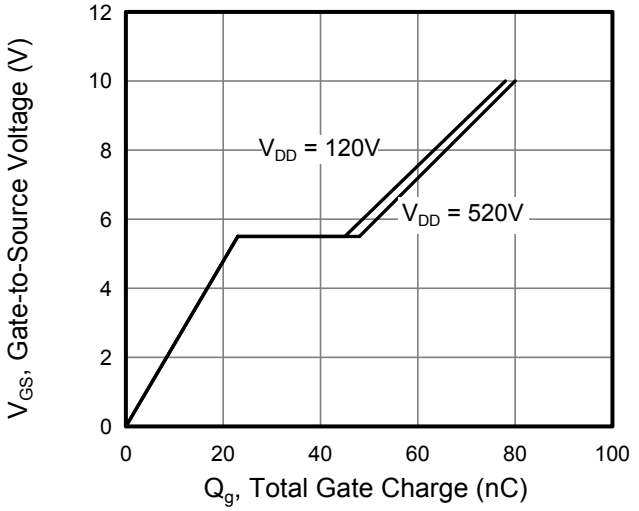

Figure 6. Body Diode Forward Voltage

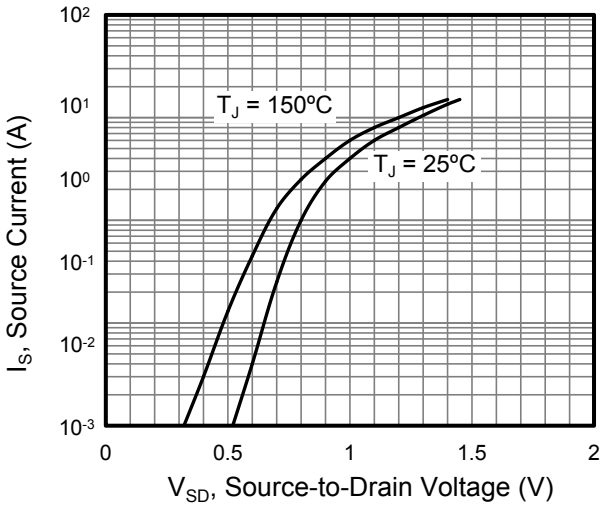

Figure 7. On-Resistance vs. Temperature

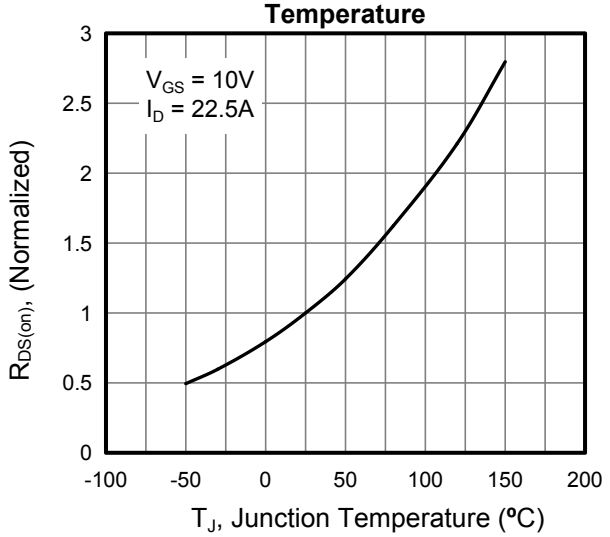

Figure 8. Breakdown voltage vs. Junction Temperature

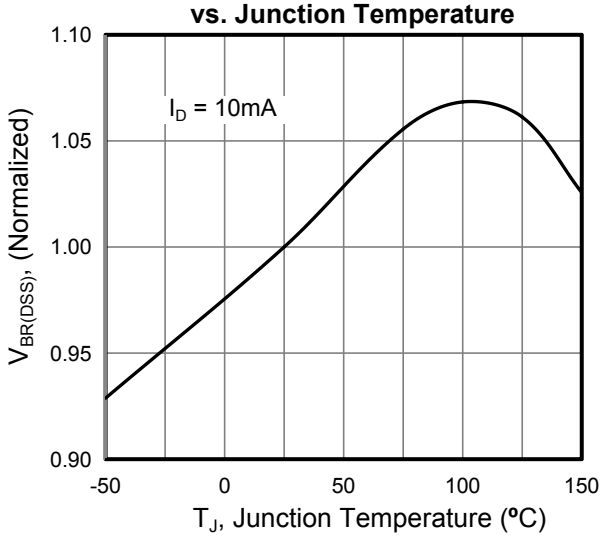

Figure 9. Transient Thermal Impedance For TO-263/TO-220/TO-247

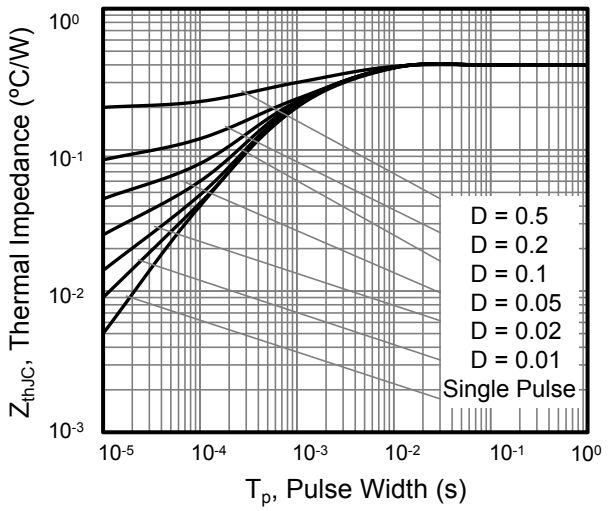

Figure 10. Safe Operation Area For TO-263/TO-220/TO-247

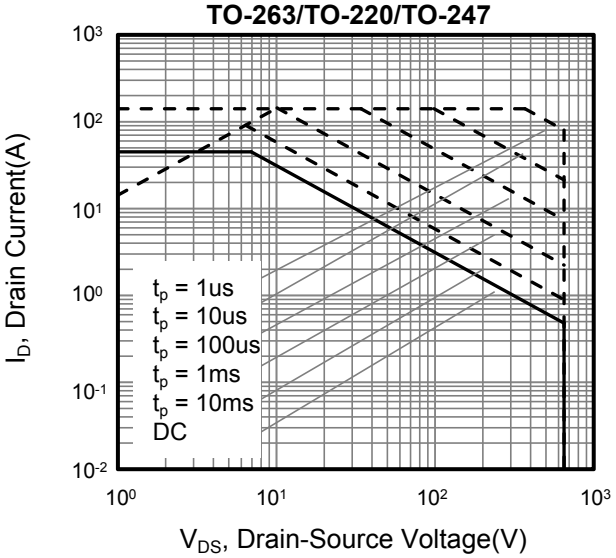

Figure 11. Typ. Coss Stored Energy

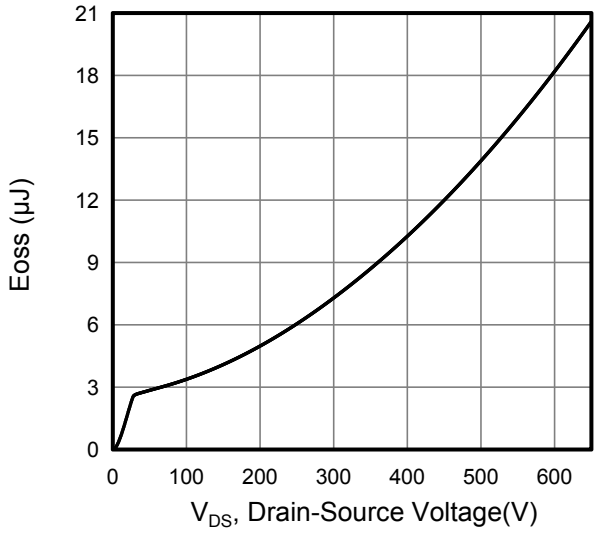

Figure A：Gate Charge Test Circuit and Waveform

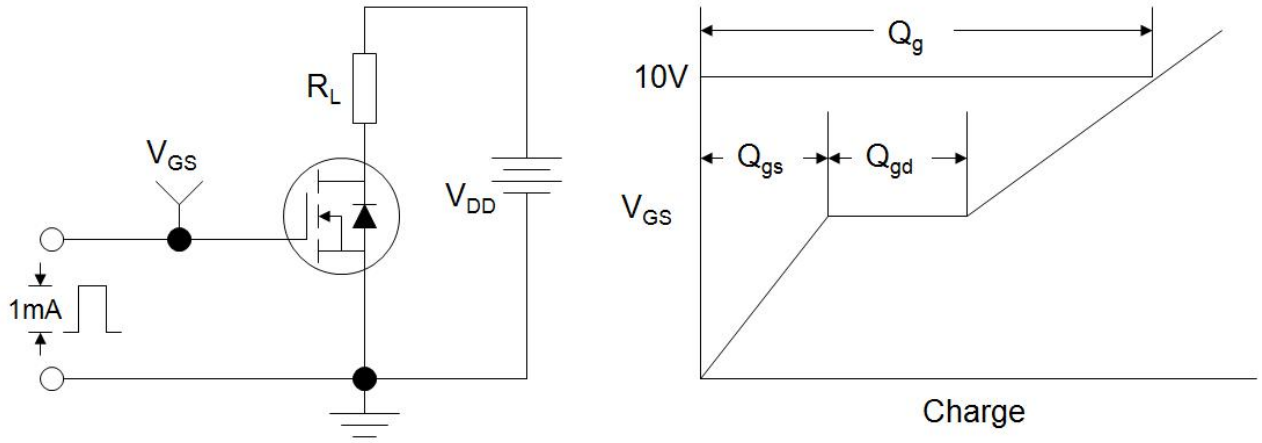

Figure B：Resistive Switching Test Circuit and Waveform

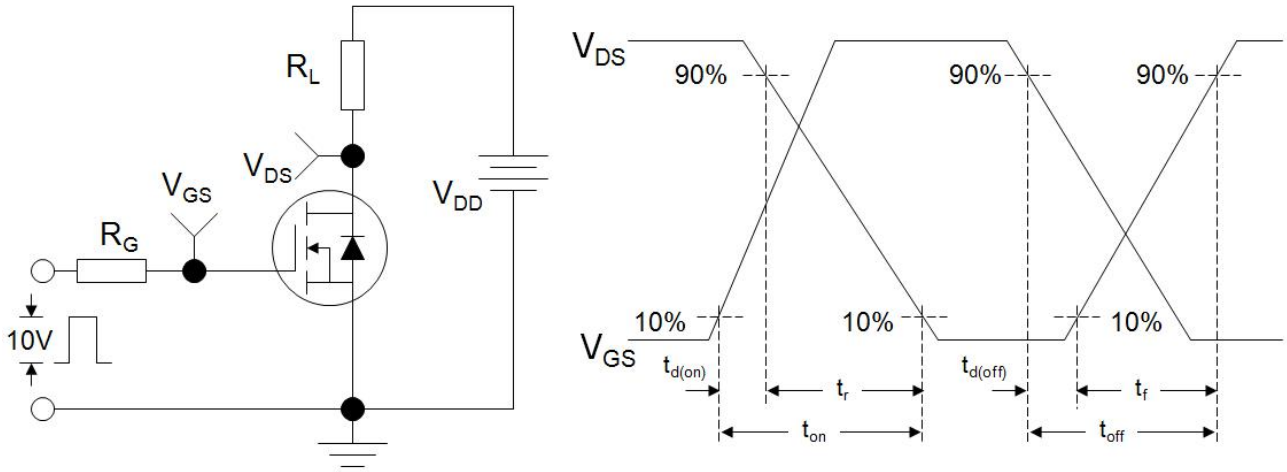

Figure C：Unclamped Inductive Switching Test Circuit and Waveform

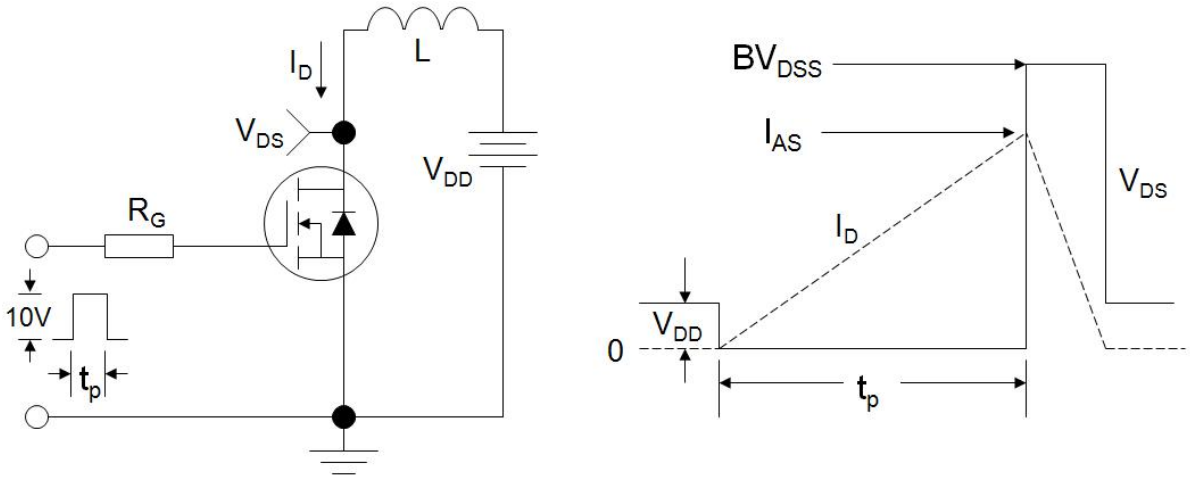

TO-263

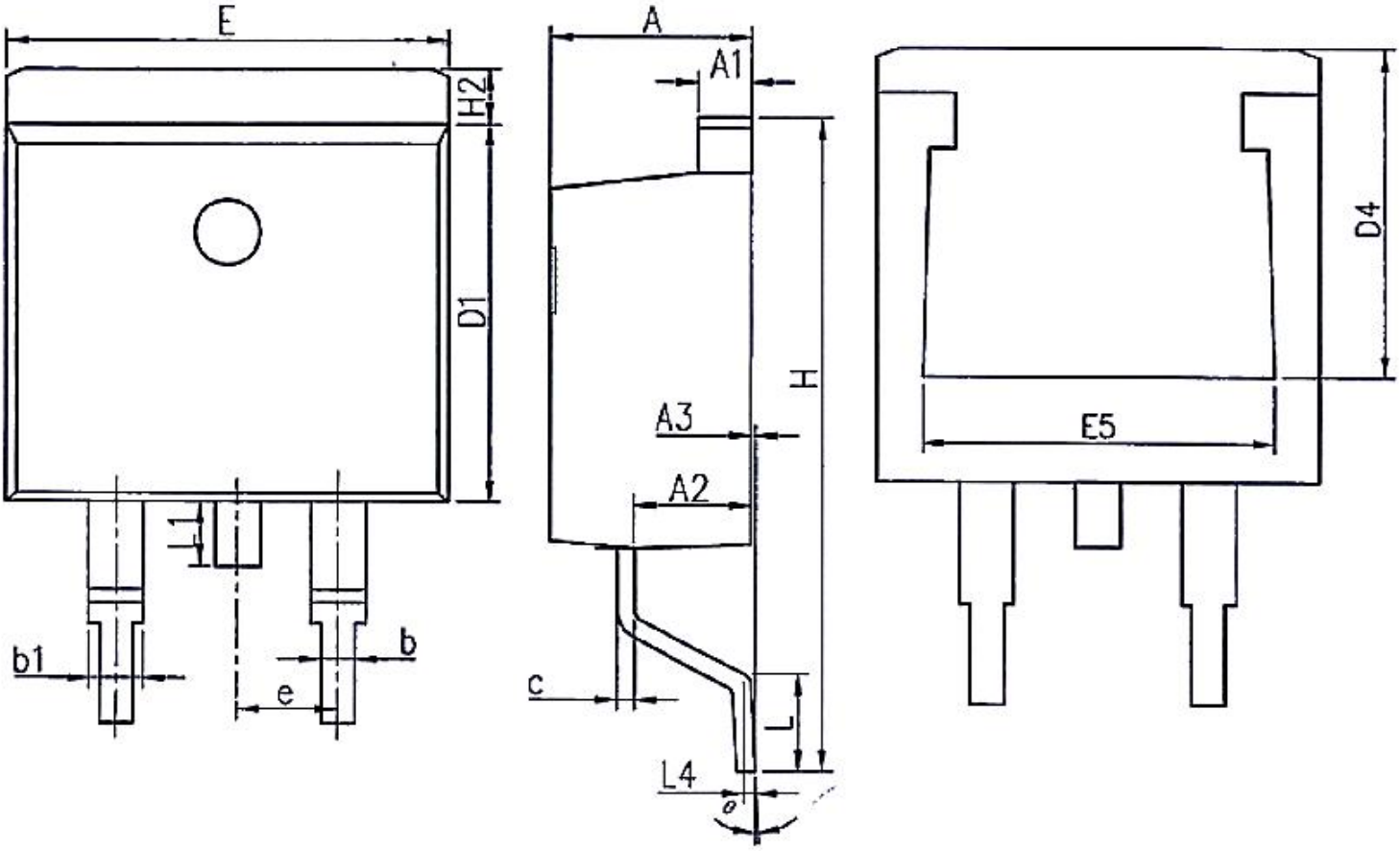

Unit:mm			
Symbol	**Min.**	**Nom**	**Max.**
A	4.37	4.57	4.77
A1	1.22	1.27	1.42
A2	2.49	2.69	2.89
A3	0.00	0.13	0.25
b	0.70	0.81	0.96
b1	1.17	1.27	1.47
c	0.30	0.38	0.53
D1	8.50	8.70	8.90
D4	6.60	-	-

Unit:mm			
Symbol	**Min.**	**Nom**	**Max.**
E	9.86	10.16	10.36
E5	7.06	-	-
e	2.54BSC		
H	14.70	15.10	15.50
H2	1.07	1.27	1.47
L	2.00	2.30	2.60
L1	1.40	1.55	1.70
L4	0.25BSC		
θ	0°	5°	9°

TO-220

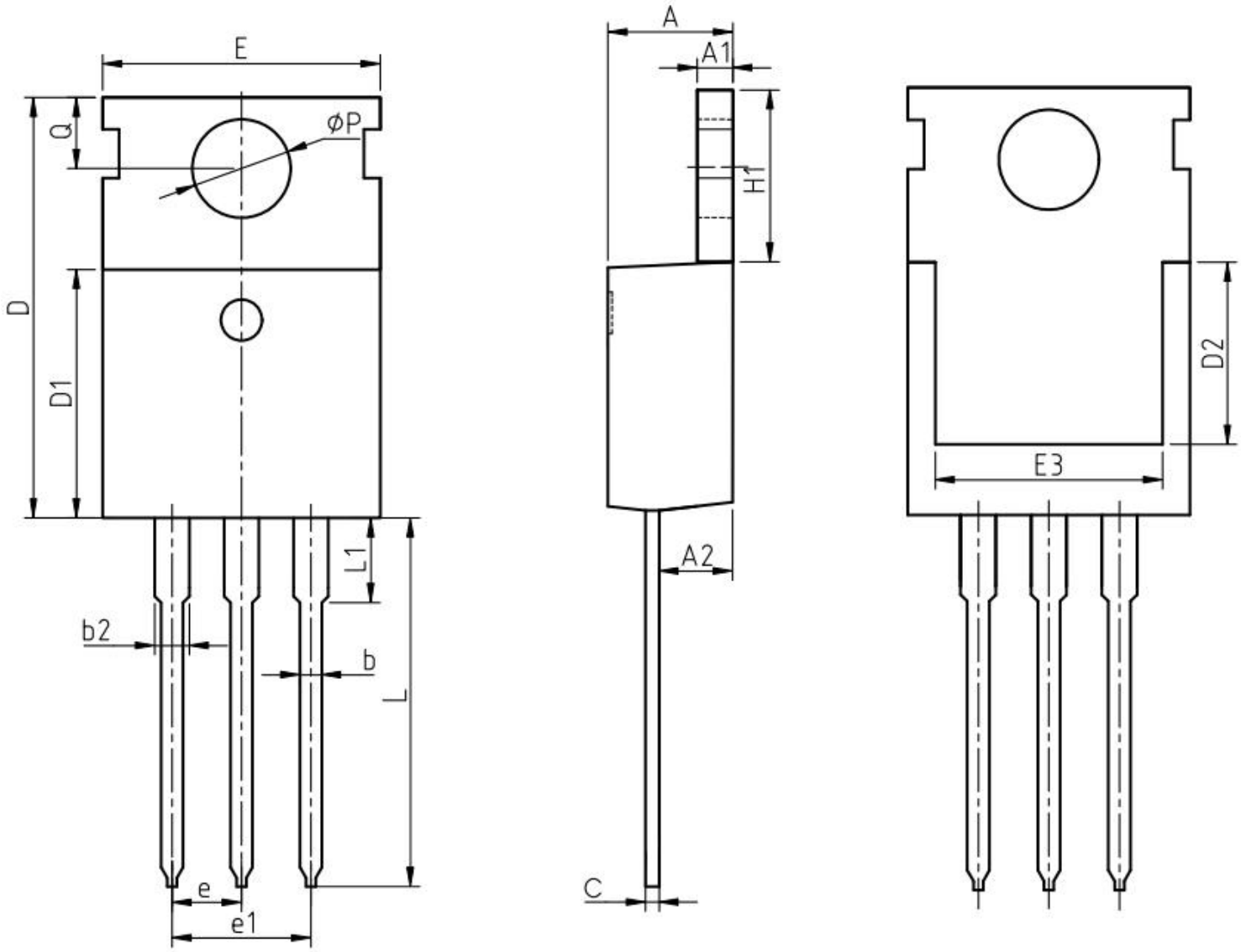

Unit:mm			
Symbol	**Min.**	**Nom**	**Max.**
A	4.37	4.57	4.77
A1	1.25	1.30	1.40
A2	2.20	2.40	2.60
b	0.70	0.80	0.95
b2	1.17	1.27	1.47
c	0.45	0.50	0.60
D	15.10	15.60	16.10
D1	8.80	9.10	9.40
D2	5.50	-	-

Unit:mm			
Symbol	**Min.**	**Nom**	**Max.**
E	9.70	10.00	10.30
E3	7.00	-	-
e	2.54 BSC		
e1	5.08 BSC		
H1	6.25	6.50	6.85
L	12.75	13.50	13.80
L1	-	3.10	3.40
ΦP	3.40	3.60	3.80
Q	2.60	2.80	3.00

TO-247

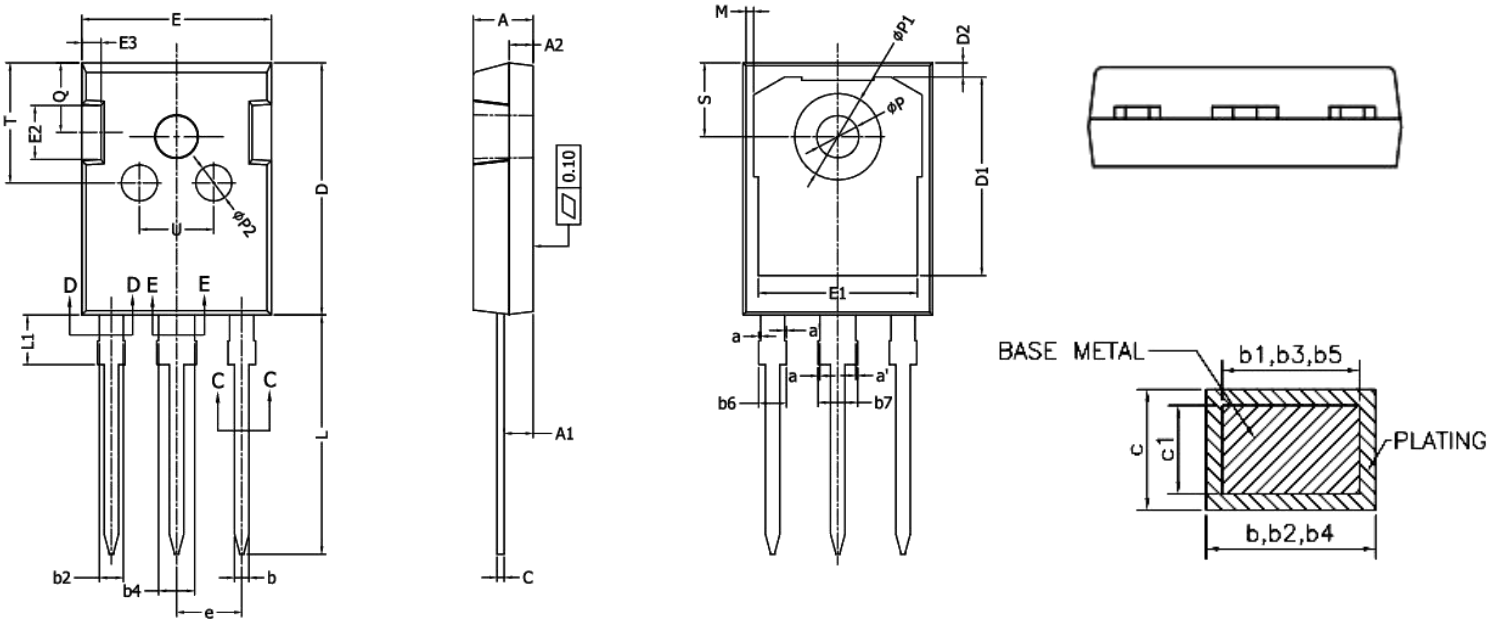

SYMBOL	MIN	NOM	MAX
A	4.90	5.00	5.10
A1	2.31	2.41	2.51
A2	1.90	2.00	2.10
a	0	---	0.15
a'	0	---	0.15
b	1.16	---	1.26
b1	1.15	1.2	1.22
b2	1.96	---	2.06
b3	1.95	2.00	2.02
b4	2.96	---	3.06
b5	2.96	3.00	3.02
b6	---	---	2.25
b7	---	---	3.25
c	0.59	---	0.66
c1	0.58	0.60	0.62
D	20.90	21.00	21.10
D1	16.25	16.55	16.85
D2	1.05	1.17	1.35
E	15.70	15.80	15.90
E1	13.10	13.30	13.50
E2	4.40	4.50	4.60
E3	2.40	2.50	2.60
e		5.436 BSC	
L	19.80	19.92	20.10
L1	---	---	4.30
M	0.35	---	0.95
P	3.40	3.50	3.60
P1	7.00	---	7.40
P2	2.40	2.50	2.60
Q	5.60	---	6.00
S	6.05	6.15	6.25
T	9.80	---	10.20
U	6.00	---	6.40

Disclaimer

All product specifications and data are subject to change without notice.

For documents and material available from this datasheet, Wuxi Unigroup does not warrant or assume any legal liability or responsibility for the accuracy, completeness of any product or technology disclosed hereunder.

No license, express or implied, by estoppels or otherwise, to any intellectual property rights is granted by this document or by any conduct of Wuxi Unigroup.

The products shown herein are not designed for use in medical, life-saving, or life-sustaining applications. Customers using or selling Wuxi Unigroup products not expressly indicated for use in such applications do so entirely at their own risk and agree to fully indemnify Wuxi Unigroup for any damages arising or resulting from such use or sale.

Wuxi Unigroup disclaims any and all liability arising out of the use or application of any product described herein or of any information provided herein to the maximum extent permitted by law. The product specifications do not expand or otherwise modify Wuxi Unigroup's terms and conditions of purchase, including but not limited to the warranty expressed therein, which apply to these products.

Wuxi Unigroup Microelectronics CO., LTD. strives to supply high-quality high-reliability products. However, any and all semiconductor products fail with some probability. It is possible that these probabilistic failures could give rise to accidents or events that could endanger human lives that could give rise to smoke or fire, or that could cause damage to other property. When designing equipment, adopt safety measures so that these kinds of accidents or events cannot occur. Such measures include but are not limited to protective circuits and error prevention circuits for safe design, redundant design, and structural design.

In the event that any or all Wuxi Unigroup products (including technical data, services) described or contained herein are controlled under any of applicable local export control laws and regulations, such products must not be exported without obtaining the export license from the authorities concerned in accordance with the above law.

Information (including circuit diagrams and circuit parameters) herein is for example only. It is not guaranteed for volume production. Wuxi Unigroup believes information herein is accurate and reliable, but no guarantees are made or implied regarding its use or any infringements of intellectual property rights or other rights of third parties.