FOXCONN®

SPECIFICATIONS

USB 3.0 A TYPE Connector

USB3.0 Series
A Type, Right Angle T/H
9 Pos.

Mechanical

Mating Force: *3.5kgf (7.71Lb) max.*
Unmating Force: *1.0kgf(2.20Lb) min.*
Durability: *5000 cycles.*

Electrical

Voltage Rating: *30 V rms maximum.*
Low Level Contact Resistance: *30 mΩmaximum initial for the Power (VBUS) and Ground (GND) contacts and 50 mΩ maximum for all other contacts .*
Dielectric Withstanding Voltage: *100V AC (Rms.)*
Insulation Resistance: *100MΩ min. at 100V DC.*

Physical

Housing: *Thermoplastic, UL 94V-0 rated in Blue color*
Contact and Shell: *Copper alloy& stainless steel*
Plating: *See "ORDERING INFORMATION"*
Operating Temperature: *-20℃ to +85℃*

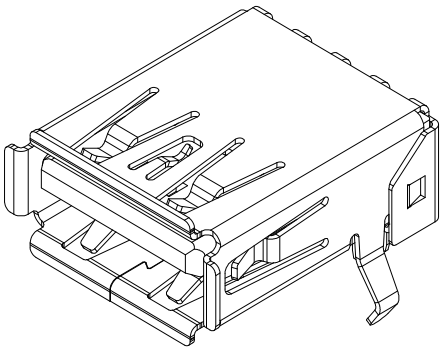

DRAWING

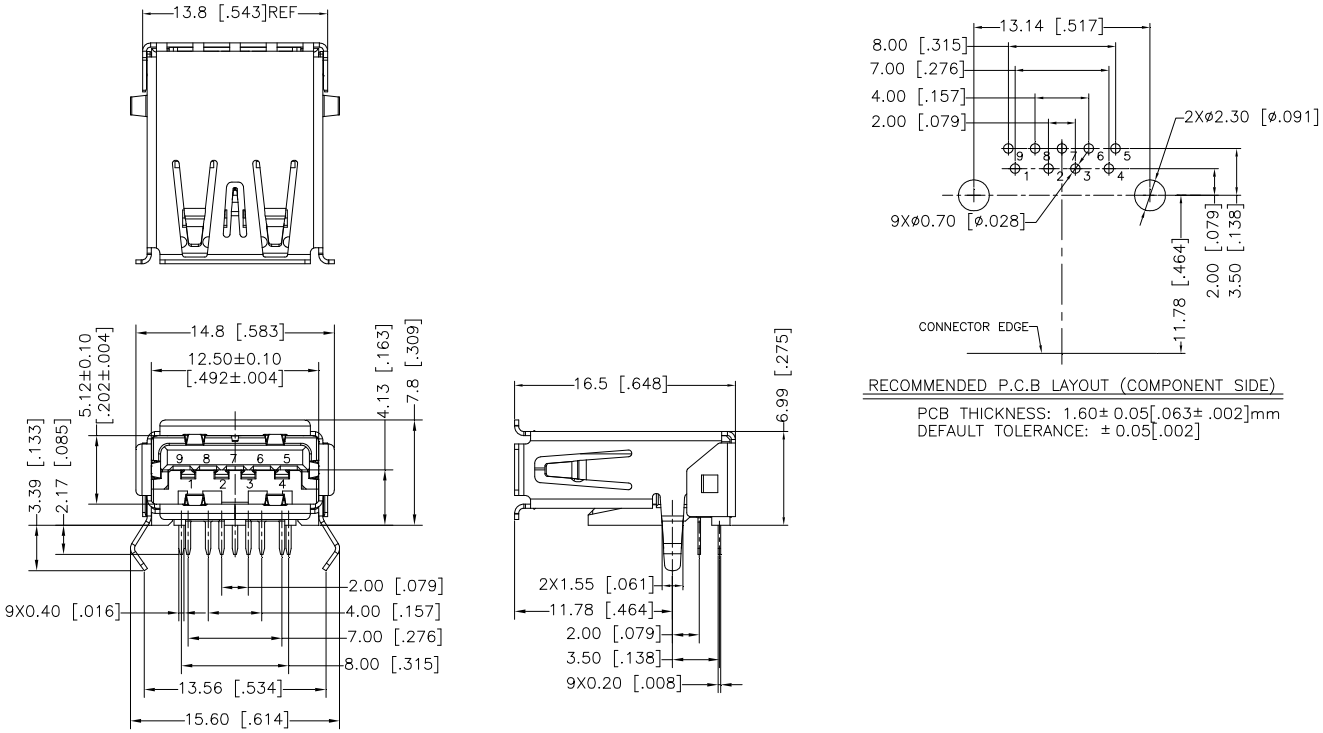

ORDERING INFORMATION

PRODUCT NO.: UEA 1 1 1 2 C - 4HK1 - 4 F

- Series Prefix: USB 3.0 A TYPE
- Termination Type: 1=Right Angle Dip
- Contact Design Type: 1=Female Contact
- No. of Pos: 1= 9 Pos.
- Profile Height: 2=4.13 mm
- Contact Area Plated: C= 30 μ" Pd/Ni+GOLD FLASH
- Modification Code
- 4=Soft Tray, F=Lead Free

All specification & dimensions are subject to change, please call your nearest Foxconn sales representative for update information.