NEC

MOS INTEGRATED CIRCUIT

μPD17012GF-058

www.DataSheet4U.com

PLL FREQUENCY SYNTHESIZER AND CONTROLLER FOR FM/MW/LW TUNER (AUTOMOBILE APPLICATION)

The μPD17012GF-058 is a CMOS LSI chip designed for use in FM/MW/LW tuners utilizing a PLL frequency synthesizer design for worldwide applications.

The device incorporates a PLL frequency synthesizer controller, prescaler, and frequency counter. The device enables detachable stereo systems, and is ideal for use in electronic volume control circuits for automobile applications, high-performance FM/MW/LW tuners with a clock, and similar applications where compact dimensions are essential.

FEATURES

- Capable of receiving broadcasts from stations in all of the world's FM and MW bands, as well as the European LW band
- Applicable to AM up-conversion
- Many preset functions including manual tuning, auto-tuning (seek, scan), and preset memory scanning
- Independent preset memory with six buttons: up to 18 FM stations (six stations, each enabling the setting of FM1, FM2, and FM3), up to 12 MW stations (six stations, each enabling the setting of MW1 and MW2), and up to six LW stations
- Last channel memory for three FM stations, two MW stations, and one LW station
- ST (stereo) display (The ST display is also supported for the MW band.)
- Display and control output of MTL (METAL)
- Auto-preset memory function
- "CD" (compact disc)/"TAPE" (cassette tape) display
- LOUD (loudness) control output and display
- Clock function for 12-hour or 24-hour clock display
- Compatible with the external LCD controller/driver (μPD7225)
- Built-in prescaler and frequency counter
- Remote-controller signal receiving function (when the μPD6121 is used for transmitting signals)
- Detachable keys (or key section) and LCD panel
- Electronic volume control function (compatible with the I^2C bus)
- Alarm function

ORDERING INFORMATION

Part number	Package
μPD17012GF-058-3BE	64-pin plastic QFP (14 × 20 mm, 1.0 mm pitch)

The information in this document is subject to change without notice.

Document No. U12506EJ1V0DS00 (1st edition)
Date Published July 1997 J
Printed in Japan

www.DataSheet4U.com

© NEC Corporation 1997

FUNCTION OVERVIEW

www.DataSheet4U.com

FREQUENCY TO BE RECEIVED, CHANNEL SEPARATION, REFERENCE FREQUENCY, AND INTERMEDIATE FREQUENCY

Area	Band	Frequency to be received	Channel separation	Reference frequency	Intermediate frequency
Eastern Europe	FM1	65 - 74 MHz	50 kHz	25 kHz	10.7 MHz
	FM2 FM3	87.5 - 108.0 MHz	50 kHz	25 kHz	10.7 MHz
	MW	522 - 1 620 kHz	9 kHz	9 kHz	450 kHz/+10.71 MHz
	LW	144 - 290 kHz	1 kHz	1 kHz	450 kHz/+10.71 MHz
Western Europe	FM	87.5 - 108.0 MHz	50 kHz	25 kHz	10.7 MHz
	MW	522 - 1 620 kHz	9 kHz	9 kHz	450 kHz/+10.71 MHz
	LW	144 - 290 kHz	1 kHz	1 kHz	450 kHz/+10.71 MHz
China	FM	87.0 - 108.0 MHz	50 kHz	25 kHz	10.7 MHz
	MW	531 - 1 602 kHz	9 kHz	9 kHz	450 kHz/+10.71 MHz
Australia, Middle East	FM	87.5 - 108.0 MHz	100 kHz	25 kHz	10.7 MHz
	MW	531 - 1 602 kHz	9 kHz	9 kHz	450 kHz/+10.71 MHz
U.S.A. 1	FM	87.5 - 108.0 MHz	100 kHz	25 kHz	10.7 MHz
	MW	530 - 1 620 kHz	10 kHz	10 kHz	450 kHz/+10.71 MHz
U.S.A. 2	FM	87.5 - 107.9 MHz	200 kHz	25 kHz	10.7 MHz
	MW	530 - 1 620 kHz	10 kHz	10 kHz	450 kHz/+10.71 MHz
U.S.A. 3	FM	87.5 - 107.9 MHz	200 kHz	25 kHz	10.7 MHz
	MW	530 - 1 710 kHz	10 kHz	10 kHz	450 kHz/+10.71 MHz
Japan	FM	76.0 - 90.0 MHz	100 kHz	25 kHz	-10.7 MHz
	MW	522 - 1 629 kHz	9 kHz	9 kHz	450 kHz/+10.71 MHz

RADIO FUNCTIONS

(1) Manual tuning

Function	Description
Manual up Manual down	Carries out tuning in step-by-step or fast-forward mode.

(2) Auto-tuning

Function	Description
Seek up	Detects a station and retains the frequency.
Scan up Scan down	Tunes to broadcasts of different stations for five seconds each.

(3) Preset memory scanning: Tunes to broadcasts of stations held in preset memory for five seconds each.

www.DataSheet4U.com

(4) Preset memory
- FM band: FM1: Six stations, FM2: Six stations, FM3: Six stations
- MW band: MW1: Six stations, MW2: Six stations
- LW band: Six stations

(5) Last channel memory: One station each for FM1, FM2, FM3, MW1, MW2, LW
(6) LOC (local) control output and display (The auto local function can be selected.)
(7) ST (stereo) display function: Supported for the FM band. The display function is also supported for the MW band. (A switching function is supported.)
(8) Auto-storage

TAPE FUNCTIONS

(1) Tape running direction display: Can be blinked at 2.5 Hz in fast-forward mode
(2) MTL (METAL) control output and display
(3) "TAPE" (cassette tape) display function

ELECTRONIC VOLUME CONTROL FUNCTIONS

(1) Volume/bass/treble/balance/fader function
(2) "VOL"/"BAS"/"TRE"/"BA"/"FA" display on the LCD panel
(3) Mute function (In the mute state, the entire panel display blinks.)
(4) Loudness function
(5) Four selectable gain levels (0 dB, 3.75 dB, 7.5 dB, or 11.25 dB)

CLOCK FUNCTIONS

(1) Selectable 12-hour clock display (with AM/PM indication) or 24-hour clock display
(2) Selectable colon (:) flashing (1 Hz)
(3) Capable of back-up with low current consumption (up to 10 μA) in no-clock mode

SECURITY FUNCTION

Enables of setting of the alarm function for security against car theft

OTHERS

(1) LOUD (loudness) control output and display: Common to radio, tape, and CD modes
(2) Key acknowledge (beep) output: Performed if a valid momentary key is on
(3) Display switching function and privileged display function
(4) "CD" (compact disc) display
(5) Compatible with the external LCD controller/driver (μPD7225)
(6) Remote-controller signal receiving function (when the μPD6121 is used for transmitting signals)
(7) Detachable keys (or key section) and LCD panel

www.DataSheet4U.com

PIN CONFIGURATION (TOP VIEW)

www.DataSheet4U.com

64-pin plastic QFP (14 × 20 mm, 1.0 mm pitch)
μPD17012GF-058-3BE

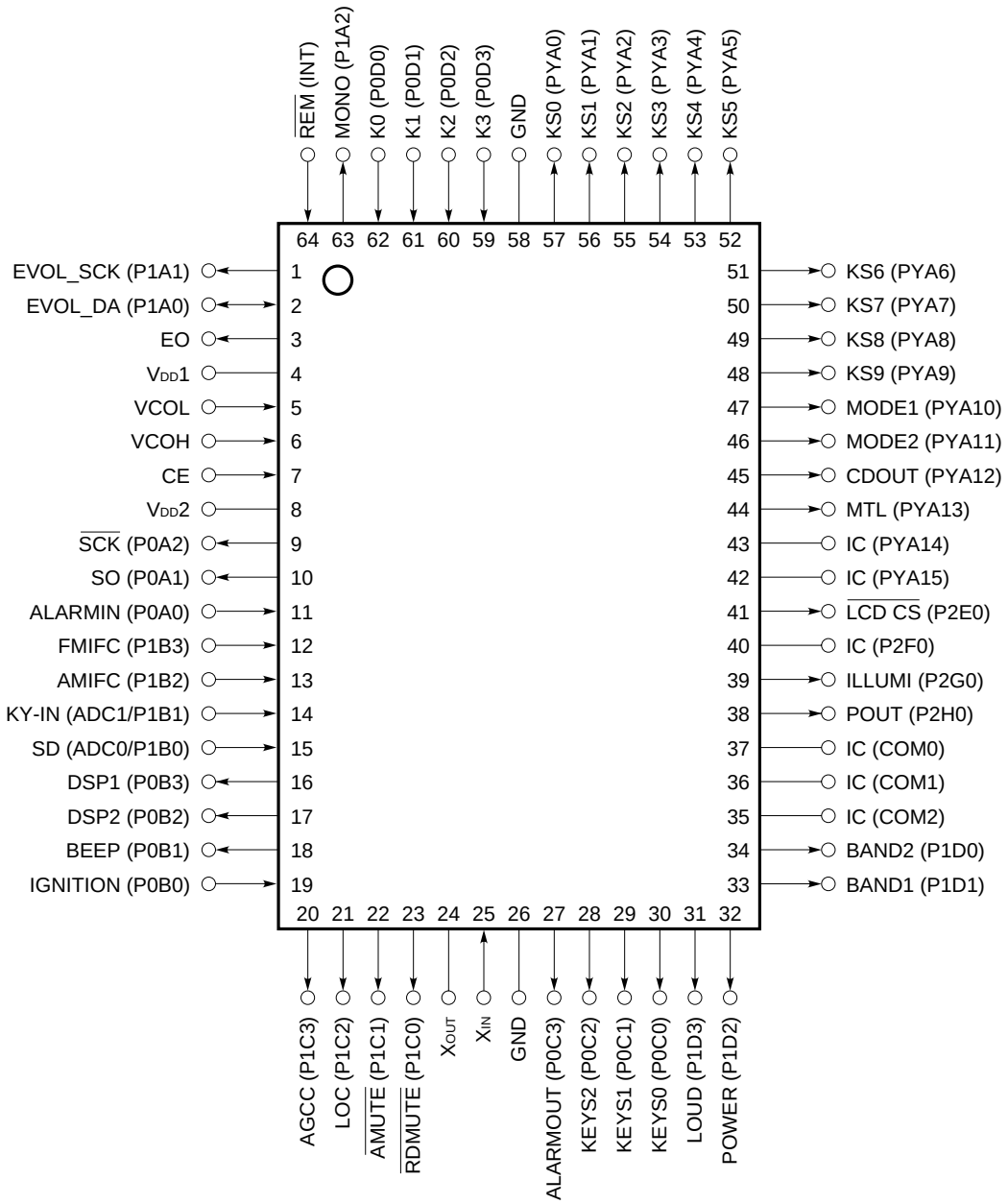

Remarks 1. The pin names enclosed in parentheses are those for the μPD17012GF-×××-3BE.

2. IC indicates that the pin is internally connected. Leave the IC pins open.

www.DataSheet4U.com

CONTENTS

www.DataSheet4U.com

1. PIN FUNCTIONS 7

2. KEY MATRIX STRUCTURE 14
   - 2.1 Placement of the Initial Setting Diode, Alternation, and Transistor Switch Matrixes 14
   - 2.2 Switch Connection 14
   - 2.3 Initial Setting Diode, Alternation, and Transistor Switch Matrix Connection 15
   - 2.4 Momentary Key Matrix Placement 16
   - 2.5 Momentary Key Matrix Connection 16
   - 2.6 Description of the Key Matrixes 17
     - 2.6.1 Initial setting diode matrixes 17
     - 2.6.2 Alternation or transistor switch 28
     - 2.6.3 Momentary keys 29

3. ALARM FUNCTION 52
   - 3.1 Overview of the Alarm Function 52
   - 3.2 Setting Alarm Mode 53

4. MODE TRANSITION 59

5. DISPLAY 66
   - 5.1 LCD Panel 66
   - 5.2 Character Style 66
   - 5.3 Examples of Display 66
   - 5.4 LCD Assignment 67
   - 5.5 Pin Assignment of the LCD Controller/Driver (μPD7225) 67
   - 5.6 Description of Display 68

6. REMOTE CONTROL FUNCTION 70
   - 6.1 Remote-Controller Key Placement (When the μPD6121G Is Used) 70
   - 6.2 Remote-Controller Keys 71
   - 6.3 Remote-Controller Data Codes 71
   - 6.4 Example of a Remote-Controller Circuit Using the μPD6121G-001 72
   - 6.5 Example of a Remote-Controller Preamplifier Circuit Using the μPC2800HA 72

7. MUTE OUTPUT TIMING CHARTS 73
   - 7.1 Radio Mute ($\overline{\text{RDMUTE}}$ Pin) Output Timing Charts 73
   - 7.2 Radio Mute ($\overline{\text{RDMUTE}}$ Pin) and Audio Mute ($\overline{\text{AMUTE}}$ Pin) Output Timing Charts 76

8. PIN I/O CIRCUITS 78

www.DataSheet4U.com

9. SAMPLE APPLICATION CIRCUITS 82

10. ELECTRICAL CHARACTERISTICS (PRELIMINARY) 83

11. PACKAGE DRAWING 86

12. RECOMMENDED SOLDERING CONDITIONS 87

APPENDIX COMMUNICATION WITH ELECTRONIC VOLUME CONTROL IC (I^2C BUS INTERFACE) 88

www.DataSheet4U.com

1. PIN FUNCTIONS

www.DataSheet4U.com

Pin No.	Symbol	Pin name	Description	I/O type
1	EVOL_SCK	Clock output of electronic volume control	Clock output pin of electronic volume control For details of data output, see **Appendix**.	CMOS push-pull output
2	EVOL_DA	Data input/ output of electronic volume control	Data input/output pin of electronic volume control For details of data output, see **Appendix**.	Input/output CMOS push-pull output
3	EO	Error out	Charge pump output pin of phase detector built into a PLL. If a divided oscillator frequency is higher than the reference frequency, the output of this pin goes high. If the divided oscillator frequency is lower, the output goes low. If the divided oscillator frequency agrees with the reference frequency, the output enters the floating state.	CMOS tristate output
4 8	$V_{DD}1$ $V_{DD}2$	Power supply	Power-supply pin of the device This pin supplies a voltage of 5 V ±10 % while the device is operating. The rise time (0 to 4.5 V) of V_{DD} must not exceed 500 ms. If the rise time is significantly long or if the voltage falls below the operating voltage but is between 0 V and 3.5 V, the state of an initial setting diode switch may be read incorrectly.	-
5	VCOL	AM local oscillator input	Input pin of the local oscillator output (VCO) in the AM (MW, LW) band When tuned to broadcasts in the MW or LW band, this pin becomes active. Otherwise, the pin is internally pulled down. To protect the built-in AC amplifier, block the flow of direct current with a capacitor, then input the frequency.	Input
6	VCOH	FM local oscillator input	Input pin of the local oscillator output (VCO) in the FM band When tuned to broadcasts in the FM band, this pin becomes active. Otherwise, the pin is internally pulled down. Because an AC amplifier is incorporated, block the flow of direct current with a capacitor, then input the frequency.	Input
7	CE	Chip enable	Input pin of the device selection signal Always pull up the pin.	Input
9	$\overline{SCK}$	Serial clock output	Serial clock output pin for controlling the LCD controller/driver (μPD7225)	CMOS push-pull output
10	SO	Serial data output	Serial data output pin for controlling the LCD controller/driver (μPD7225)	CMOS push-pull output
11	ALARMIN	Door switch input	Input pin of the door switch See **Chapter 3** for details.	Input

www.DataSheet4U.com

www.DataSheet4U.com

<table>
<tr><th>Pin No.</th><th>Symbol</th><th>Pin name</th><th>Description</th><th>I/O type</th></tr>
<tr><td>12</td><td>FMIFC</td><td>FM intermediate frequency input</td><td>Input pin of the intermediate frequency (IF) in the FM band
To protect the built-in AC amplifier, block the flow of direct current with a capacitor, then input the frequency.
When the ENFMIF switch (initial setting diode) is set to 1, this pin is used to detect a station during auto-tuning.
If the input frequency range and conditions listed below are satisfied, it is judged that a station has been found.
<table><tr><th>Item / Band</th><th>Input frequency range <1></th><th>Input frequency range <2></th></tr><tr><td>FM</td><td>10.7 MHz ±50 kHz</td><td>10.7 MHz ±12.5 kHz</td></tr></table>
A frequency within input frequency range <1> must be input within 20 ms of the PLL being locked. If a frequency is included in both input frequency ranges <1> and <2>, it is judged that a station has been found. Auto-tuning is stopped.</td><td>Input</td></tr>
<tr><td>13</td><td>AMIFC</td><td>AM intermediate frequency input</td><td>Input pin for the intermediate frequency (IF) in the AM (MW, LW) band. To protect the built-in AC amplifier, block the flow of direct current with a capacitor, then input the frequency.
If the initial setting diode ENAMIF is set to 1, this pin is used to detect whether a station is found in auto-tuning.
If the input frequency range and conditions listed below are satisfied, it is judged that a station has been found.
<table><tr><th>Item / Band</th><th>Input frequency range <1> [kHz]</th><th>Input frequency range <2> [kHz]</th></tr><tr><td>MW</td><td>450 ± 5</td><td>450 ± 2</td></tr><tr><td>LW</td><td>450 ± 5</td><td>450 ± 0.5</td></tr></table>
A frequency within input frequency range <1> must be input within 20 ms of the PLL being locked. If a frequency is included in both input frequency ranges <1> and <2>, it is judged that a station has been found. Auto-tuning is stopped.</td><td>Input</td></tr>
<tr><td>14</td><td>KY-IN</td><td>Key input</td><td>Input pin for the key return signal of the momentary key matrix</td><td>Input</td></tr>
</table>

www.DataSheet4U.com

www.DataSheet4U.com

<table>
<tr><th>Pin No.</th><th>Symbol</th><th>Pin name</th><th>Description</th><th>I/O type</th></tr>
<tr><td>15</td><td>SD</td><td>SD input</td><td>SD (station detector) signal input pin
If the following voltage is applied to this pin, it is judged that an SD is found.
<table><tr><th rowspan="2">Band</th><th rowspan="2">LOCAL/DX mode</th><th colspan="2">Voltage by which the presence of an SD is assumed</th></tr><tr><th>When V_{DD} is set to 5 V</th></tr><tr><td rowspan="2">FM</td><td>LOCAL</td><td>$\frac{28.5}{64} \times V_{DD}$ or higher</td><td>2.227</td></tr><tr><td>DX</td><td>$\frac{12.5}{64} \times V_{DD}$ or higher</td><td>0.977</td></tr><tr><td rowspan="2">MW
LW</td><td>LOCAL</td><td>$\frac{15.5}{64} \times V_{DD}$ or higher</td><td>1.211</td></tr><tr><td>DX</td><td>$\frac{12.5}{64} \times V_{DD}$ or higher</td><td>0.977</td></tr></table>
The SD signal is used to judge whether a station is found.</td><td>Input</td></tr>
<tr><td>16
17</td><td>DSP1
DSP2</td><td>DSP control output</td><td>Output pin for the DSP chip control signal.
See the description of the DSP momentary key.</td><td>CMOS push-pull output</td></tr>
<tr><td>18</td><td>BEEP</td><td>Beep output</td><td>Beep sound output pin that functions when a momentary key is pressed
If a momentary key is pressed, square waves (duty cycle 50 %) of 3 kHz are output for about 40 ms. This period agrees with the period of the preceding mute.
A beep sound is output if a press of a momentary key causes the LCD panel display or output port state to be changed, or if a hold period of five seconds ends during scanning or preset memory scanning.
The beep sound output is used as the alarm output when the alarm function is used. If this output is not used, leave the pin open.</td><td>CMOS push-pull output</td></tr>
<tr><td>19</td><td>IGNITION</td><td>Ignition input</td><td>Pin to be connected to the car ignition switch.
Input a high level signal for normal operation of the device. Input a low level signal when the device is not being used.</td><td>Input</td></tr>
<tr><td>20</td><td>AGCC</td><td>AGC cut output</td><td>AGC (auto gain control) cut signal output pin in radio mode
The output goes high in auto-tuning, as shown below.
 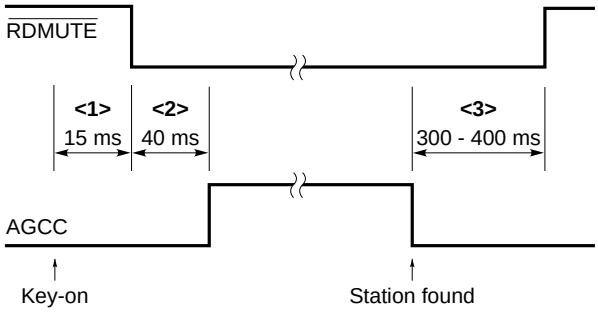

<1> : Waiting for key-on chattering
<2> : Preceding mute
<3> : Following mute</td><td>CMOS push-pull output</td></tr>
</table>

www.DataSheet4U.com

www.DataSheet4U.com

Pin No.	Symbol	Pin name	Description	I/O type
21	LOC	Local signal output	Local signal output pin in radio mode The operation depends on the mode, as described below: **(1) In radio mode, radio-monitor tape mode, radio-monitor CD mode** The LOC output goes high only in auto-tuning in the local state. The level of the LOC output depends on both the tuning state and LOCAL/DX state. The relationships are listed below: <table><tr><th>Auto-tuning state</th><th>LOCAL/DX state</th><th>LOC output level</th></tr><tr><td rowspan="2">In progress</td><td>LOCAL</td><td>High</td></tr><tr><td>DX</td><td>Low</td></tr><tr><td>Not performed</td><td>Don't care</td><td>Low</td></tr></table> **(2) In other modes** The output goes low.	CMOS push-pull output
22	$\overline{\text{AMUTE}}$	Audio mute output	Output pin of the tape or CD mute signal The operation depends on the mode, as described below: **(1) In radio mode, radio-monitor tape mode, radio-monitor CD mode, power-off mode** The output goes low. **(2) In CD mode and tape mode** The output goes high. See **Chapter 7** for details.	CMOS push-pull output
23	$\overline{\text{RDMUTE}}$	Radio mute output	Output pin of radio mute signal The operation depends on the mode, as described below: **(1) In radio mode, radio-monitor tape mode, radio-monitor CD mode; at radio-on, radio-off; at band switching; at switching of the frequency to be received** The output goes low. **(2) In CD mode and tape mode** The output method can be selected by setting the initial setting diode MUTESEL. (See **Section 2.6.1**.) If the radio-monitor function is used, set MUTESEL to 0 and bring the output low. See **Chapter 7** for details.	CMOS push-pull output
24	X_{OUT}	Crystal	Pin for connecting a crystal	-
25	X_{IN}		A 4.5-MHz crystal is connected.	Input
26 58	GND	Ground	Ground pin Connect pins No. 26 and No. 58 to an identical potential.	-
27	ALARMOUT	Alarm-out output	Alarm-out output pin See **Chapter 3** for details.	CMOS push-pull output
28 | 30	KEYS2 | KEYS0	Key source signal output	Output pin for the key source signal for the momentary key matrix.	N-ch open-drain output
31	LOUD	Loudness output	Output pin for the loudness control signal When the loudness state is set, the output goes high.	CMOS push-pull output

www.DataSheet4U.com

www.DataSheet4U.com

<table>
<tr><th>Pin No.</th><th>Symbol</th><th>Pin name</th><th>Description</th><th>I/O type</th></tr>
<tr><td>32</td><td>POWER</td><td>Power output</td><td>The output is inverted each time the POWER key is pressed.
Use this pin to turn the radio on or off.
Connecting this pin to transistor switch RDSET enables power-on and off of the radio.</td><td>CMOS push-pull output</td></tr>
<tr><td>33
34</td><td>BAND1
BAND2</td><td>Band switching signal output</td><td>Output pin of the band switching signal in radio mode
The operation depends on the mode, as described below:
(1) In radio mode, radio-monitor tape mode, radio-monitor CD mode
If the band to be received is switched by pressing the band switching key, the output depends on the band, as listed below:
<table>
<tr><th>Pin / Band</th><th>BAND1</th><th>BAND2</th></tr>
<tr><td>MW</td><td>0</td><td>0</td></tr>
<tr><td>LW</td><td>0</td><td>1</td></tr>
<tr><td>FM</td><td>1</td><td>0</td></tr>
</table>
(0: Low, 1: High)
(2) In tape mode, CD mode, power-off mode
The output goes low.</td><td>CMOS push-pull output</td></tr>
<tr><td>35
|
37
40
42
43</td><td>IC</td><td>IC</td><td>Internally connected pin.
Leave the pins open.</td><td>-</td></tr>
<tr><td>38</td><td>POUT</td><td>Detachable panel state signal</td><td>Output pin of the detachable panel state signal
When the DTH switch is set to off, the pin outputs the detachable panel state signal, having a frequency of 1 Hz and a duty cycle of 1/2.</td><td>CMOS push-pull output</td></tr>
<tr><td>39</td><td>ILLUMI</td><td>Illumination signal output</td><td>Illumination signal output pin
The output methods are selected according to the states of the ILLA and ILLB initial setting diodes, as follows:
<table>
<tr><th>ILLA</th><th>ILLB</th><th>Function</th></tr>
<tr><td>0</td><td>0</td><td>Loudness function only</td></tr>
<tr><td>0</td><td>1</td><td>Loudness/illumination functions</td></tr>
<tr><td>1</td><td>0</td><td>Loudness/illumination functions</td></tr>
<tr><td>1</td><td>1</td><td>Loudness function only</td></tr>
</table>
(1: Shorted by the diode; 0: Open)</td><td>CMOS push-pull output</td></tr>
<tr><td>41</td><td>$\overline{\text{LCD CS}}$</td><td>LCD chip select signal output</td><td>Output pin for the chip select signal
This pin is used as an output pin of the chip select signal for the external LCD controller/driver (μPD7225).
When the output goes low, the external LCD controller/driver is enabled.</td><td>CMOS push-pull output</td></tr>
</table>

Caution When the μPD7225 external LCD controller/driver is used, connect the C/$\overline{D}$ pin to the V_{DD} pin at the μPD7225.

www.DataSheet4U.com

www.DataSheet4U.com

<table>
<tr><th>Pin No.</th><th>Symbol</th><th>Pin name</th><th>Description</th><th>I/O type</th></tr>
<tr><td>44</td><td>MTL</td><td>METAL signal output</td><td>METAL signal output pin
The output level depends on the METAL state, as listed below:
<table><tr><th>METAL state</th><th>Output level</th></tr><tr><td>ON</td><td>High</td></tr><tr><td>OFF</td><td>Low</td></tr></table>If the TPSET switch is set to on, the output level depends on the METAL state, regardless of the current mode.</td><td>CMOS push-pull output</td></tr>
<tr><td>45</td><td>CDOUT</td><td>CD mode output</td><td>CD mode output pin
Each time the CD momentary key is pressed, the CDOUT output is inverted. In the following modes, the CDOUT output is always set low:
● When IGNITION is low
● In power-off mode (when IGNITION is high and the radio, tape, and CD are off)
● When the DTH transistor switch is set to off</td><td>CMOS push-pull output</td></tr>
<tr><td>46
47</td><td>MODE2
MODE1</td><td>Mode signal output</td><td>Mode switching signal output pin
The output depends on the mode, as listed below:
<table><tr><th>Mode</th><th>MODE1</th><th>MODE2</th></tr><tr><td>When IGNITION is low</td><td>0</td><td>0</td></tr><tr><td>When IGNITION is high and the radio, tape, and CD are off (power-off mode)</td><td>0</td><td>0</td></tr><tr><td>In radio mode</td><td>1</td><td>0</td></tr><tr><td>In tape mode</td><td>0</td><td>0</td></tr><tr><td>In CD mode</td><td>0</td><td>1</td></tr><tr><td>In radio-monitor tape mode</td><td rowspan="2">1</td><td>0</td></tr><tr><td>In radio-monitor CD mode</td><td>1</td></tr></table>(0: Low, 1: High)</td><td>CMOS push-pull output</td></tr>
<tr><td>48
|
57</td><td>KS9
|
KS0</td><td>Key source signal output</td><td>Output pin of the key source signal of the key matrix</td><td>CMOS push-pull output</td></tr>
<tr><td>59
|
62</td><td>K3
|
K0</td><td>Key return signal input</td><td>Input pin of the key return signal of the key matrix</td><td>Input</td></tr>
</table>

www.DataSheet4U.com

www.DataSheet4U.com

<table>
<tr><th>Pin No.</th><th>Symbol</th><th>Pin name</th><th>Description</th><th>I/O type</th></tr>
<tr><td>63</td><td>MONO</td><td>MONO signal output</td><td>MONO signal output pin
This pin functions as a MONO signal output pin in radio mode, radio-monitor tape mode, or radio-monitor CD mode.
The output level depends on the selected band and the MONO state, as listed below:
<table><tr><th>Selected band</th><th>MONO state</th><th>Output level</th></tr><tr><td rowspan="2">FM</td><td>ON</td><td>High</td></tr><tr><td>OFF</td><td>Low</td></tr><tr><td>LW</td><td>Don’t care</td><td>Low</td></tr></table>If the MW band is selected, the output level depends on the setting of the initial setting diode MWS, as listed below:
<table><tr><th>MWS</th><th>MONO state</th><th>Output level</th></tr><tr><td rowspan="2">1</td><td>ON</td><td>High</td></tr><tr><td>OFF</td><td>Low</td></tr><tr><td>0</td><td>Don’t care</td><td>Low</td></tr></table>(1: Shorted by the diode, 0: Open)</td><td>CMOS push-pull output</td></tr>
<tr><td>64</td><td>$\overline{\text{REM}}$</td><td>Remote-controller signal input</td><td>Input pin for the infrared remote-controller signal. The output of the preamplifier (such as μPC2800HA) of a remote controller is connected. Use the μPD6121G to send signals from the remote-controller.</td><td>Input</td></tr>
</table>

www.DataSheet4U.com

2. KEY MATRIX STRUCTURE

www.DataSheet4U.com

2.1 Placement of the Initial Setting Diode, Alternation, and Transistor Switch Matrixes

Input pin (pin number) / Output pin (pin number)	K3 (59)	K2 (60)	K1 (61)	K0 (62)
KS9 (48)	-	DISALARM	VOLATT_L	VOLATT_H
KS8 (49)	RDSET	ST	DTH	VKYSEL
KS7 (50)	FF	RL	CDSET	TPSET
KS6 (51)	IFAM	-	-	MWS
KS5 (52)	AUTO500	MUTESEL	AUTOLOC	FAD_SEL
KS4 (53)	CKHLT	ILLA	ILLB	KTAPE
KS3 (54)	NOCLK	CLKDISP	FLASH	DISAMEMO
KS2 (55)	ENFMIF	ENAMIF	PRIO2	PRIO1
KS1 (56)	ENFM	DISFM3	ENMW2	DISLW
KS0 (57)	-	AREA3	AREA2	AREA1

: Initial setting diode matrix

: Alternation or transistor switch

- : Open

2.2 Switch Connection

Alternation switch

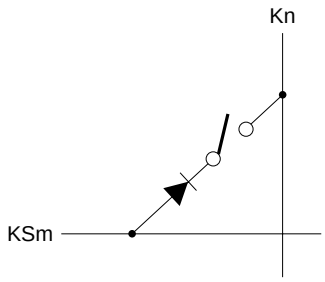

Transistor switch

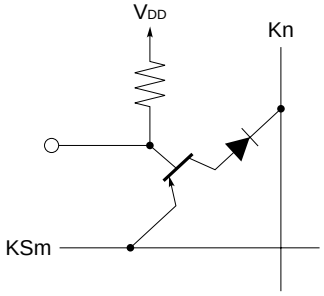

Initial setting diode

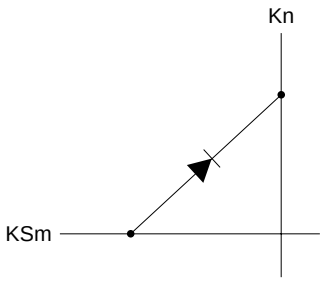

www.DataSheet4U.com

2.3 Initial Setting Diode, Alternation, and Transistor Switch Matrix Connection

www.DataSheet4U.com

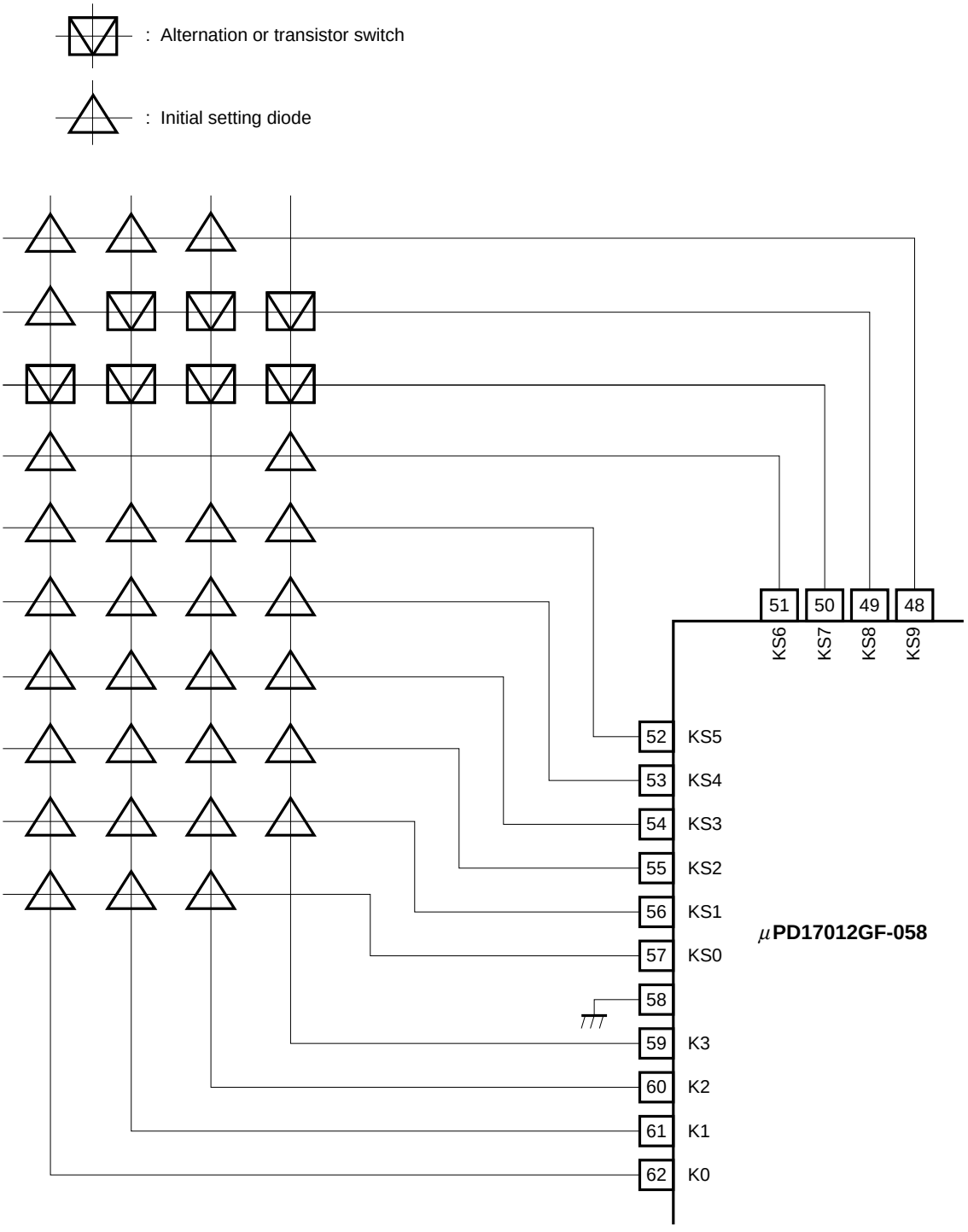

www.DataSheet4U.com

2.4 Momentary Key Matrix Placement

Input voltage / Selection pin (pin number)	0 to 0.04 V_{DD}	0.05 to 0.12 V_{DD}	0.13 to 0.20 V_{DD}	0.21 to 0.29 V_{DD}	0.30 to 0.38 V_{DD}	0.39 to 0.48 V_{DD}	0.49 to 0.57 V_{DD}	0.58 to 0.66 V_{DD}	0.67 to 0.76 V_{DD}	0.77 to 0.84 V_{DD}	0.85 to 0.91 V_{DD}
KEYS0 (30)	M1	M2	M3	M4	M5	M6	SEEK UP	ALARM	MAN UP	MAN DWN	MONO/ LOC
KEYS1 (29)	BAND	CD	POWER	VOL UP	VOL DWN	VOL SEL	LOUD/ ILLMI-NATION	MUTE	DISP	DSP	P.SCAN
KEYS2 (28)	RDMONI	SCAN UP	SCAN DWN	-	-	MTL	-	-	-	-	-

- : Open

2.5 Momentary Key Matrix Connection

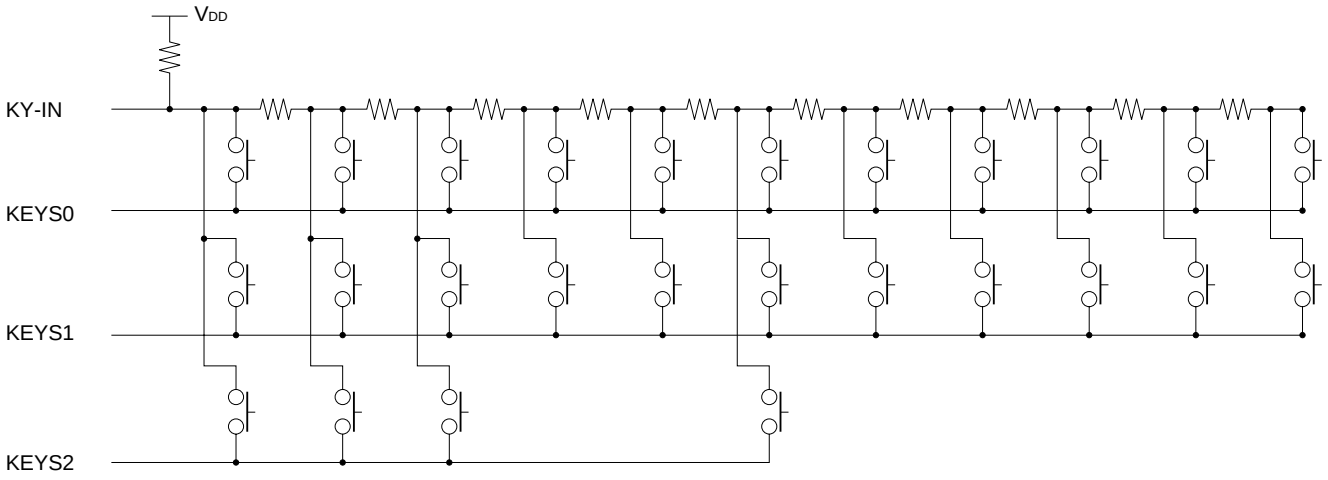

www.DataSheet4U.com

2.6 Description of the Key Matrixes

www.DataSheet4U.com

2.6.1 Initial setting diode matrixes

The μPD17012GF-058 has the following 18 initial setting diode matrixes. When the V_{DD} is supplied with power for the first time (at a power-on reset), the states of the diodes in these matrixes are read in. In all other occasions, they are ignored.

(1) Switches to specify the reception area
AREA1, AREA2, and AREA3

(2) Switches to specify the reception band
DISFM3, DISLW, ENFM, and ENMW2

(3) Switch to specify whether to use the auto-storage function
DISAMEMO

(4) Switches to specify whether to use the frequency counter for detecting broadcasting stations
ENAMIF and ENFMIF

(5) Switch to specify tuning operation
AUTO500

(6) Switches to specify display priority
PRIO1 and PRIO2

(7) Switches to specify the clock function
CLKDISP, FLASH, and NOCLK

(8) Switches to specify the tape function
KTAPE

(9) Switch to specify the mute output
MUTESEL

(10) Switch to specify the local operation
AUTOLOC

(11) Switch to specify the intermediate frequency for the AM (MW, LW) band
IFAM

(12) Switch to specify whether the MW band stereo reception function is available
MWS

(13) Switch to specify that the standby mode has no clock
CKHLT

www.DataSheet4U.com

(14) Switch to specify whether the electronic volume control fader function is available

FAD_SEL

www.DataSheet4U.com

(15) Switch to specify which key (VOL UP/VOL DWN or MAN UP/MAN DWN) is used for electronic volume control

VKYSEL

(16) Switches to specify the gain of the electronic volume control

VOLATT_H and VOLATT_L

(17) Switches for setting illumination control

ILLA and ILLB

(18) Switch for specifying whether the alarm function is used

DISALARM

To set these switches to 1, short the diodes in each matrix. To set these switches to 0, keep the diodes open. The functions of the initial setting diode matrixes are summarized below (in alphabetical order).

www.DataSheet4U.com

<table>
<tr><th>Initial setting diode</th><th>Description</th></tr>
<tr><td>AREA1
AREA2
AREA3</td><td>These switches are used to specify the reception area.
The following table lists the settings of the switches and the corresponding reception areas.
See the summary of functions for the reception frequencies in each reception area.
<table>
<tr><th>AREA3</th><th>AREA2</th><th>AREA1</th><th>Area</th></tr>
<tr><td>0</td><td>0</td><td>0</td><td>Western Europe</td></tr>
<tr><td>0</td><td>0</td><td>1</td><td>Australia
Middle and Near East</td></tr>
<tr><td>0</td><td>1</td><td>0</td><td>Japan</td></tr>
<tr><td>0</td><td>1</td><td>1</td><td>USA 1</td></tr>
<tr><td>1</td><td>0</td><td>0</td><td>USA 2</td></tr>
<tr><td>1</td><td>0</td><td>1</td><td>Eastern Europe</td></tr>
<tr><td>1</td><td>1</td><td>0</td><td>USA 3</td></tr>
<tr><td>1</td><td>1</td><td>1</td><td>China</td></tr>
</table>
(1: Shorted by the diode; 0: Open)</td></tr>
<tr><td>AUTO500</td><td>This switch specifies the function of the MAN UP and MAN DWN keys. With the AUTO500 switch, it is possible to use the MAN UP and MAN DWN keys also for auto-tuning (seek operation), as follows.
<table>
<tr><th>AUTO500</th><th>MAN UP and MAN DWN key function</th></tr>
<tr><td>0</td><td>Only manual tuning is performed.
Each time the key is pressed, the frequency counter is incremented or decremented by one channel. Keeping the key pressed for at least 0.5 seconds triggers manual fast increment/decrement.</td></tr>
<tr><td>1</td><td>Both manual and auto-tuning are performed.
Each time the key is pressed, the frequency counter is incremented or decremented by one channel. Keeping the key pressed for at least 0.5 seconds causes auto-tuning (seek operation) to begin at the next channel.
The SEEK UP key becomes ineffective.</td></tr>
</table>
(1: Shorted by the diode; 0: Open)</td></tr>
</table>

www.DataSheet4U.com

<table>
<tr><th>Initial setting diode</th><th>Description</th></tr>
<tr><td>AUTOLOC</td><td>This switch specifies the local function, as follows:
<table>
<tr><th>AUTOLOC</th><th>Local function</th></tr>
<tr><td>0</td><td>Either or DX mode is selected according to a key entry (no auto local function available).
Each time the [MONO/LOC] key is pressed, switching occurs between local and DX modes.
The local output is high in the local mode during auto-tuning (seek, scan, or auto-store).</td></tr>
<tr><td>1</td><td>The auto local function is performed (if available).
The [MONO/LOC] key becomes ineffective.
Keeping the [SEEK UP], [SCAN UP], [SCAN DWN] or [P.SCAN] key for at least 2 seconds triggers auto-tuning, turns on the “LOC” display, and makes the local output high. After one cycle of auto-tuning is completed, a search begins in DX mode (with the “LOC” display off and local output at a low level).
In modes other than auto-tuning , the “LOC” display is off and the local output is low. If a key for the same operation (for example, the [SEEK UP] key during seek operation) is pressed in local mode during auto-tuning, a search begins in DX mode at the same frequency used when auto-tuning began. If the key is pressed in DX mode, auto-tuning stops, and the frequency that was selected when auto-tuning began is reselected.
The same operation as above occurs when the AUTO500 is set to 1 (by keeping the [MAN UP] or [MAN DWN] key pressed for at least 0.5 seconds).</td></tr>
</table>
(1: Shorted by the diode; 0: Open)</td></tr>
<tr><td>CKHLT</td><td>When the DISALARM and NOCLK initial setting diodes = 1, and CE = low, the CKHLT switch specifies which standby mode is to be used, STOP or HALT.
<table>
<tr><th>CKHLT</th><th>CE = low</th></tr>
<tr><td>0</td><td>STOP mode</td></tr>
<tr><td>1</td><td>HALT mode</td></tr>
</table>
(1: Shorted by the diode; 0: Open)</td></tr>
<tr><td>CLKDISP</td><td>This switch specifies the clock display system (12/24) as follows:
<table>
<tr><th>CLKDISP</th><th>Clock display system</th></tr>
<tr><td>0</td><td>12-hour system
AM12 : 00 → AM11 : 59
PM11 : 59 ← PM12 : 00</td></tr>
<tr><td>1</td><td>24-hour system
0 : 00 → 23 : 59</td></tr>
</table>
(1: Shorted by the diode; 0: Open)</td></tr>
<tr><td>DISALARM</td><td>This switch specifies whether the alarm function is used, as follows:
<table>
<tr><th>DISALARM</th><th>Description</th></tr>
<tr><td>0</td><td>Used</td></tr>
<tr><td>1</td><td>Not used</td></tr>
</table>
(1: Shorted by the diode; 0: Open)</td></tr>
</table>

www.DataSheet4U.com

www.DataSheet4U.com

<table>
<tr><th>Initial setting diode</th><th>Description</th></tr>
<tr><td>DISAMEMO</td><td>This switch is used to inhibit the auto-storage function, as follows:
<table>
<tr><th>DISAMEMO</th><th>Description</th></tr>
<tr><td>0</td><td>The auto-storage function is enabled.
Keeping the [P.SCAN] key pressed for at least 2 seconds triggers the auto-storage operation.</td></tr>
<tr><td>1</td><td>The auto-storage function is disabled.
The [P.SCAN] key can be used only for the preset scan function.</td></tr>
</table>
(1: Shorted by the diode; 0: Open)</td></tr>
<tr><td>DISFM3
DISLW
ENFM
ENMW2</td><td>These switches are used to specify the reception band.
Each switch has the following functions.
○ DISFM3: When set to 1, disables the FM3 band.
○ ENMW2: When set to 1, enables the MW2 band.
○ DISLW: When set to 1, disables the LW band for Western Europe and Eastern Europe. This switch is ineffective in the other areas.
○ ENFM: When set to 1, enables only the FM band.
The following table lists the settings of these switches and the corresponding reception bands in each area.
<table>
<tr><th>Area</th><th>ENFM</th><th>DISFM3</th><th>ENMW2</th><th>DISLW</th><th>Reception band</th></tr>
<tr><td rowspan="8">Western Europe
Eastern Europe</td><td>1</td><td>0</td><td>-</td><td>-</td><td>FM1, FM2, FM3</td></tr>
<tr><td>1</td><td>1</td><td>-</td><td>-</td><td>FM1, FM2</td></tr>
<tr><td>0</td><td>0</td><td>0</td><td>0</td><td>FM1, FM2, FM3, MW1, LW</td></tr>
<tr><td>0</td><td>0</td><td>0</td><td>1</td><td>FM1, FM2, FM3, MW1</td></tr>
<tr><td>0</td><td>0</td><td>1</td><td>-</td><td>FM1, FM2, FM3, MW1, MW2</td></tr>
<tr><td>0</td><td>1</td><td>0</td><td>0</td><td>FM1, FM2, MW1, LW</td></tr>
<tr><td>0</td><td>1</td><td>0</td><td>1</td><td>FM1, FM2, MW1</td></tr>
<tr><td>0</td><td>1</td><td>1</td><td>-</td><td>FM1, FM2, MW1, MW2</td></tr>
<tr><td rowspan="8">The other areas</td><td>1</td><td>0</td><td>-</td><td>-</td><td>FM1, FM2, FM3</td></tr>
<tr><td>1</td><td>1</td><td>-</td><td>-</td><td>FM1, FM2</td></tr>
<tr><td>0</td><td>0</td><td>0</td><td>-</td><td>FM1, FM2, FM3, MW1</td></tr>
<tr><td>0</td><td>0</td><td>1</td><td>-</td><td>FM1, FM2, FM3, MW1, MW2</td></tr>
<tr><td>0</td><td>1</td><td>0</td><td>-</td><td>FM1, FM2, MW1</td></tr>
<tr><td>0</td><td>1</td><td>1</td><td>-</td><td>FM1, FM2, MW1, MW2</td></tr>
</table>
(1: Shorted by the diode; 0: Open; -: Don't care)</td></tr>
</table>

www.DataSheet4U.com

<table>
<tr><th>Initial setting diode</th><th>Description</th></tr>
<tr><td>ENAMIF
ENFMIF</td><td>These switches specify whether to use the frequency counter to detect a broadcasting station, as follows:
<table>
<tr><th rowspan="2">ENFMIF</th><th rowspan="2">ENAMIF</th><th>Band</th><th rowspan="2">Method to detect a station</th></tr>
<tr><td></td></tr>
<tr><td rowspan="2">1</td><td rowspan="2">1</td><td>FM</td><td>Frequency counter and SD method</td></tr>
<tr><td>MW, LW</td><td>Frequency counter and SD method</td></tr>
<tr><td rowspan="2">1</td><td rowspan="2">0</td><td>FM</td><td>Frequency counter and SD method</td></tr>
<tr><td>MW, LW</td><td>SD method</td></tr>
<tr><td rowspan="2">0</td><td rowspan="2">1</td><td>FM</td><td>SD method</td></tr>
<tr><td>MW, LW</td><td>Frequency counter and SD method</td></tr>
<tr><td rowspan="2">0</td><td rowspan="2">0</td><td>FM</td><td>SD method</td></tr>
<tr><td>MW, LW</td><td>SD method</td></tr>
</table>
(1: Shorted by the diode; 0: Open)</td></tr>
<tr><td>FAD_SEL</td><td>This switch specifies whether to enable the electronic volume control fader function, as follows:
<table>
<tr><th>FAD_SEL</th><th>Description</th></tr>
<tr><td>0</td><td>The fader function is enabled.
Pressing the VOL SEL key switches the electronic volume control mode as shown below.
Volume → Bass → Treble
Fader ← Balance ←</td></tr>
<tr><td>1</td><td>The fader function is disabled.
Pressing the VOL SEL key switches the electronic volume control mode as shown below.
Volume → Bass
Balance ← Treble ←</td></tr>
</table>
(1: Shorted by the diode; 0: Open)</td></tr>
<tr><td>FLASH</td><td>This switch specifies how a colon (:) is used in the clock display, as follows:
<table>
<tr><th>FLASH</th><th>Colon (:) display</th></tr>
<tr><td>0</td><td>Stays on.</td></tr>
<tr><td>1</td><td>Blinks.
● Frequency: 1 Hz
● Duty cycle: 6 on and 4 off</td></tr>
</table>
(1: Shorted by the diode; 0: Open)</td></tr>
<tr><td>IFAM</td><td>This switch specifies the intermediate frequency for the AM band (MW and LW), as follows:
<table>
<tr><th>IFAM</th><th>Intermediate frequency</th></tr>
<tr><td>0</td><td>450 kHz</td></tr>
<tr><td>1</td><td>10.71 MHz</td></tr>
</table>
(1: Shorted by the diode; 0: Open)</td></tr>
</table>

www.DataSheet4U.com

www.DataSheet4U.com

<table>
<tr><th>Initial setting diode</th><th>Description</th></tr>
<tr><td>ILLA
ILLB</td><td>These switches set illumination control, as follows:
<table>
<tr><th>ILLA</th><th>ILLB</th><th>Function</th></tr>
<tr><td>0</td><td>0</td><td>Loudness function only</td></tr>
<tr><td>0</td><td>1</td><td>Loudness/illumination functions</td></tr>
<tr><td>1</td><td>0</td><td>Loudness/illumination functions</td></tr>
<tr><td>1</td><td>1</td><td>Loudness function only</td></tr>
</table>
(1: Shorted by the diode; 0: Open)</td></tr>
<tr><td>KTAPE</td><td>This key specifies whether to assign the tape function (MTL) to the [M5] radio function key, as follows:
<table>
<tr><th>KTAPE</th><th>Function</th></tr>
<tr><td>0</td><td>In tape mode, the [M5] key is not used for MTL.</td></tr>
<tr><td>1</td><td>In tape mode, the [M5] key is used for MTL.</td></tr>
</table>
(1: Shorted by the diode; 0: Open)
Regardless of the states of the KTAPE switch, the [M1] to [M6] keys are used to access a preset memory and enable or disable writing to it.
● Radio-monitor tape mode
● Radio-monitor CD mode</td></tr>
<tr><td>MUTESEL</td><td>This switch specifies how the state of the $\overline{\text{RDMUTE}}$ pin output is to change in tape and CD modes, as follows:
<table>
<tr><th>MUTESEL</th><th>$\overline{\text{RDMUTE}}$ pin output</th></tr>
<tr><td>1</td><td>The mute function is disabled in tape and CD modes.
 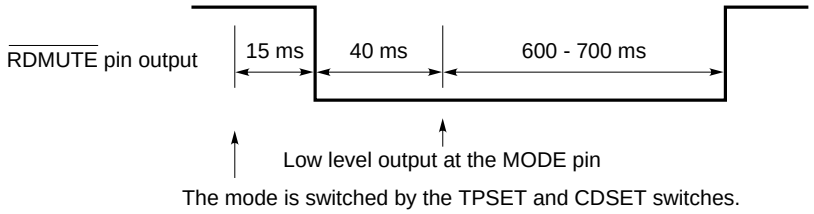

When MUTESEL = 1, do not use the radio monitor function.</td></tr>
<tr><td>0</td><td>The mute function remains turned on in tape and CD modes.
 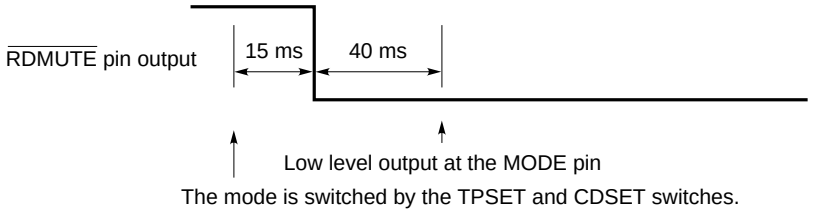
</td></tr>
</table>
(1: Shorted by the diode; 0: Open)
See Chapter 7 for details.</td></tr>
<tr><td>MWS</td><td>This switch specifies whether to enable the MW band stereo reception function, as follows:
<table>
<tr><th>MWS</th><th>Description</th></tr>
<tr><td>1</td><td>The MW band stereo reception function is enabled.</td></tr>
<tr><td>0</td><td>The MW band stereo reception function is disabled.</td></tr>
</table>
(1: Shorted by the diode; 0: Open)</td></tr>
</table>

www.DataSheet4U.com

<table>
<tr><th>Initial setting diode</th><th>Description</th></tr>
<tr><td>NOCLK</td><td>This switch specifies whether a clock is available.
<table>
<tr><th>NOCLK</th><th>Clock</th></tr>
<tr><td>0</td><td>Available</td></tr>
<tr><td>1</td><td>Unavailable</td></tr>
</table>
(1: Shorted by the diode; 0: Open)</td></tr>
<tr><td>PRIO1
PRIO2</td><td>These switches specify a privileged display. The term privileged display means the display which is resumed in five seconds after any other display is selected, if no key is pressed.
The PRIO1 and PRIO2 switches can determine the privileged display only when the NOCLK initial setting diode = 0 (with a clock). If NOCLK = 1 (without a clock), the states of these switches are ignored.
<table>
<tr><th>PRIO1</th><th>PRIO2</th><th>Privileged display</th><th>Description</th></tr>
<tr><td>0</td><td>0</td><td>None</td><td>Display switching occurs when the DISP key or a preset number key is pressed.
○ In radio mode
Each time the DISP key is pressed, switching occurs between the frequency and clock displays.
Pressing a preset number key during clock display causes the frequency display to appear.
○ In tape mode
Each time the DISP key is pressed, switching occurs between the “TAPE” and clock displays.
○ In CD mode
Each time the DISP key is pressed, switching occurs between the “CD” and clock displays.
○ In radio-monitor tape mode
Each time the DISP key is pressed, switching occurs among the “TAPE”, frequency, and clock displays.
Pressing the preset number key during “TAPE” or clock display causes the frequency display to appear.
Radio-monitor tape mode begins with the frequency display.
○ In radio-monitor CD mode
Each time the DISP key is pressed, switching occurs among the “CD”, frequency, and clock displays.
Pressing a preset number key during “CD” or clock display causes the frequency display to appear.
Radio-monitor CD mode begins with the frequency display.</td></tr>
</table>
(0: Open)</td></tr>
</table>

www.DataSheet4U.com

www.DataSheet4U.com

Initial setting diode	Description
PRIO1 PRIO2	

PRIO1	PRIO2	Privileged display	Description
1	0	Frequency CD TAPE	In 5 seconds after the DISP key is pressed to shift from the frequency, "CD", or "TAPE" display to the clock display, the previous display is resumed if no other key is pressed. ○ **In radio mode** Usually the frequency display appears and remains. Pressing the DISP key causes the clock display to appear for 5 seconds. Pressing the DISP key or a preset number key within this 5-second period of the clock display resumes the frequency display. ○ **In tape mode** Usually the "TAPE" display appears and remains. Pressing the DISP key causes the clock display to appear for 5 seconds. Pressing the DISP key again within this 5-second period of clock display resumes the "TAPE" display. ○ **In CD mode** Usually the "CD" display appears and remains. Pressing the DISP key causes the clock display to appear for 5 seconds. Pressing the DISP key again within this 5-second period of the clock display resumes the "CD" display. ○ **In radio-monitor tape mode** Usually the "TAPE" display appears and remains. Pressing the DISP key causes the frequency display to appear for 5 seconds. Pressing the DISP key again within this 5-second period of the frequency display causes the clock display to appear. Pressing the DISP key again within this 5-second period of the clock display causes the "TAPE" display to appear. Pressing a preset number key during "TAPE" or clock display causes the frequency display to appear for 5 seconds. ○ **In radio-monitor CD mode** Usually the "CD" display appears and remains. Pressing the DISP key causes the frequency display to appear for 5 seconds. Pressing the DISP key again within this 5-second period of the frequency display causes the clock display to appear. Pressing the DISP key again within this 5-second period of the clock display causes the "CD" display to appear. Pressing a preset number key during "CD" or clock display causes the frequency display to appear for 5 seconds.

(1: Shorted by the diode; 0: Open)

www.DataSheet4U.com

Initial setting diode	Description
PRIO1 PRIO2	

www.DataSheet4U.com

PRIO1	PRIO2	Privileged display	Description
0	1	Clock	The clock display has precedence over the other displays. ○ **In radio mode** Usually the clock display appears and remains. Pressing the DISP key causes the frequency display to appear for 5 seconds. Pressing the DISP key again within this 5-second period of frequency display resumes the clock display. ○ **In tape mode** Usually the clock display appears and remains. Pressing the DISP key causes the "TAPE" display to appear for 5 seconds. Pressing the DISP key again within this 5-second period of "TAPE" display resumes the clock display. ○ **In CD mode** Usually the clock display appears and remains. Pressing the DISP key causes the "CD" display to appear for 5 seconds. Pressing the DISP key again within this 5-second period of the "CD" display resumes the clock display. ○ **In radio-monitor tape mode** Usually the clock display appears and remains. Pressing the DISP key causes the "TAPE" display to appear for 5 seconds. Pressing the DISP key again within this 5-second period of the "TAPE" display causes the frequency display to appear. Pressing the DISP key again within this 5-second period of the frequency display causes the clock display to appear. Pressing a preset number key during "TAPE" or clock display causes the frequency display to appear for 5 seconds. ○ **In radio-monitor CD mode** Usually the clock display appears and remains. Pressing the DISP key causes the "CD" display to appear for 5 seconds. Pressing the DISP key again within this 5-second period of the "CD" display causes the frequency display to appear. Pressing the DISP key again within this 5-second period of the frequency display causes the clock display to appear. Pressing a preset number key during "CD" or clock display causes the frequency display to appear for 5 seconds.
1	1	-	Do not select this mode.

(1: Shorted by the diode; 0: Open)

If a clock is unavailable (NOCLK = 1), one of the displays listed below appears depending on what the current mode is, regardless of the states of the PRIO1 and PRIO2 switches. The DISP key is ineffective.

Mode	Display
Radio mode	Frequency
Tape mode	TAPE
CD mode	CD
● Radio-monitor tape mode ● Radio-monitor CD mode	Frequency

www.DataSheet4U.com

<table>
<tr><th>Initial setting diode</th><th>Description</th></tr>
<tr><td>VKYSEL</td><td>This switch specifies what keys are used for volume control in each electronic volume control mode, as follows:
<table>
<tr><th>VKYSEL</th><th>Description</th></tr>
<tr><td>0</td><td>The VOL UP and VOL DWN keys are used for volume control in each electronic volume control mode.</td></tr>
<tr><td>1</td><td>The MAN UP and MAN DWN keys are used for volume control in each electronic volume control mode. The VOL UP or VOL DWN key is unusable for volume control.</td></tr>
</table>
(1: Shorted by the diode; 0: Open)</td></tr>
<tr><td>VOLATT_H
VOLATT_L</td><td>These switches specify the gain of the electronic volume control, as follows:
<table>
<tr><th>VOLATT_H</th><th>VOLATT_L</th><th>Gain</th></tr>
<tr><td>0</td><td>0</td><td>11.25 dB</td></tr>
<tr><td>0</td><td>1</td><td>7.5 dB</td></tr>
<tr><td>1</td><td>0</td><td>0 dB</td></tr>
<tr><td>1</td><td>1</td><td>3.75 dB</td></tr>
</table></td></tr>
</table>

www.DataSheet4U.com

2.6.2 Alternation or transistor switch

In the following table, a statement that a switch is on (off) means that a high (low) level is input.

www.DataSheet4U.com

Alternation/ transistor switch	Description
CDSET	This switch selects CD mode. It is effective only when the CE pins is at a high level. Setting this switch to on selects CD mode.
DTH	This is the input switch to specify whether the detachable panel is attached. When this switch is off, it indicates that the panel is detached.
FF	This is the fast forward signal input switch for tape mode. The tape run direction indicator (◀ ▶) may light depending on the state of the RL switch as listed below. FF / RL / Indicator 0 / 0 / ◀ ▷ 0 / 1 / ◁ ▶ 1 / 0 / ◀ ▷ 1 / 1 / ◁ ▶ (▷ : Does not light ▶ : Lights ▶ : Blinks (at 2.5 Hz) 0 : Off 1 : On)
RDSET	This switch selects radio mode. It is effective only when the CE pin is at a high level. If both CDSET and TPSET switches are off, setting the RDSET switch to on selects radio mode.
RL	This is the forward run signal input switch for tape mode. The tape run direction indicator (◀ ▶) is controlled according to the state of the FF switch. See the description of the FF switch for the state of the indicator.
ST	This switch is a stereo signal input switch for radio mode. For the FM band in radio mode, setting this switch to on turns on the “ST” display. If the stereo reception function is available for the MW band (initial setting diode MWS = 1), setting the ST switch to on with the MW band selected turns on the “ST” display. However, the display is turned off in the monaural state.
TPSET	This switch selects tape mode. It is effective only when the CE pins is at a high level. If the CDSET switch is off, setting the TPSET switch to on selects tape mode.

www.DataSheet4U.com

2.6.3 Momentary keys

The functions of the momentary keys are summarized below (in alphabetical order).

www.DataSheet4U.com

Momentary key	Description
ALARM	This key can be used only for setting alarm mode. This key is effective when the IGNITION pin is at the low level and DISALARM initial setting diode = 0. See **Chapter 3** for details.
BAND	The BAND key is used to switch the reception band. This key is effective when the current mode is radio, radio-monitor tape, or radio-monitor CD mode. When the key is pressed, the reception band is switched sequentially as follows. → FM1 → FM2 → FM3 → MW1 → MW2 → LW → However, inhibited bands are skipped. They are specified by the AREA1, AREA2, and AREA3 initial setting diodes (to specify reception areas) and the DISFM3, DISLW, ENFM, and ENMW2 initial setting diodes (to specify reception bands). The band display and last channel vary during band switching within the same type of band (FM1 → FM2 → FM3, MW1 → MW2). The BAND key becomes ineffective in tape and CD modes.
CD	Each time the CD key is pressed, the output of the CDOUT pin (pin 45) is inverted. Using the CDOUT output makes it possible to implement an application such as described below: Turning on/off a transistor switch connected to the CDSET pin according to the CDOUT output can switch on/off the CD mode according to the state of the CD key. 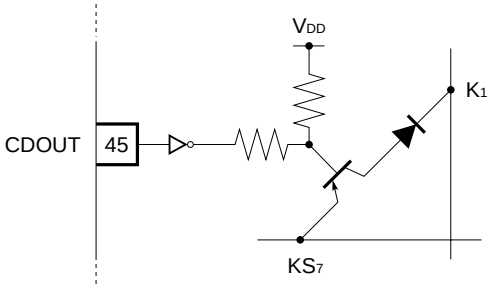

www.DataSheet4U.com

<table>
<tr><th>Momentary key</th><th>Description</th></tr>
<tr><td>DISP</td><td>
www.DataSheet4U.com
The DISP key is used to switch the display. It is effective when NOCLK initial setting diode = 0 (with a clock).
Display switching occurs as follows:
(1) In radio mode
Each time the key is pressed, the display switches between the frequency and clock.
The DISP key is ineffective during seek-scanning and auto-preset scanning.
The operation depends on the states of the PRIO1 and PRIO2 initial setting diodes as follows:
<table>
<tr><th>PRIO1</th><th>PRIO2</th><th>Privileged display</th><th>Description</th></tr>
<tr><td>0</td><td>0</td><td>None</td><td>Each time the DISP key is pressed, the display switches between the frequency and clock.</td></tr>
<tr><td>1</td><td>0</td><td>Frequency display</td><td>Pressing the DISP key during frequency display causes the clock display to appear for 5 seconds. Pressing the DISP key during the 5-second period of clock display causes the frequency display to appear again.</td></tr>
<tr><td>0</td><td>1</td><td>Clock display</td><td>Pressing the DISP key during clock display causes the frequency display to appear for 5 seconds. Pressing the DISP key during the 5-second period of frequency display causes the clock display to appear again.</td></tr>
</table>
(1: Shorted by the diode; 0: Open)
When radio mode is selected, the display begins with the frequency.

(2) In tape mode
Each time the DISP key is pressed, the display switches between “TAPE” and the clock.
The operation depends on the states of the PRIO1 and PRIO2 initial setting diodes as follows:
<table>
<tr><th>PRIO1</th><th>PRIO2</th><th>Privileged display</th><th>Description</th></tr>
<tr><td>0</td><td>0</td><td>None</td><td>Each time the DISP key is pressed, the display switches between the frequency and clock.</td></tr>
<tr><td>1</td><td>0</td><td>“TAPE” display</td><td>Pressing the DISP key during “TAPE” display causes the clock display to appear for 5 seconds. Pressing the DISP key during the 5-second period of clock display causes the “TAPE” display to appear again.</td></tr>
<tr><td>0</td><td>1</td><td>Clock display</td><td>Pressing the DISP key during clock display causes the “TAPE” display to appear for 5 seconds. Pressing the DISP key during the 5-second period of “TAPE” display causes the clock display to appear again.</td></tr>
</table>
(1: Shorted by the diode; 0: Open)
When radio mode is selected, the display begins with the “TAPE” display.
</td></tr>
</table>

www.DataSheet4U.com

Momentary key	Description
DISP	**(3) In CD mode** Each time the DISP key is pressed, the display switches between "CD" and the clock. The operation depends on the states of the PRIO1 and PRIO2 initial setting diodes as follows:

PRIO1	PRIO2	Privileged display	Description
0	0	None	Each time the DISP key is pressed, the display switches between "CD" and clock.
1	0	"CD" display	Pressing the DISP key during "CD" display causes the clock display to appear for 5 seconds. Pressing the DISP key during the 5-second period of clock display causes the "CD" display to appear again.
0	1	Clock display	Pressing the DISP key during clock display causes the "CD" display to appear for 5 seconds. Pressing the DISP key during the 5-second period of "CD" display causes the clock display to appear again.

(1: Shorted by the diode; 0: Open)

When CD mode is selected, the display begins with the "CD".

(4) In radio-monitor tape mode

Each time the DISP key is pressed, the display switches among "TAPE", frequency, and clock.
The operation depends on the states of the PRIO1 and PRIO2 initial setting diodes as follows:

PRIO1	PRIO2	Privileged display	Description
0	0	None	Each time the DISP key is pressed, the display is toggled as follows: →"TAPE"→ frequency → clock →
1	0	"TAPE" display	Each time the DISP key is pressed, the display is toggled as follows: →"TAPE"→ frequency → clock → If no key is pressed during frequency or clock display, the "TAPE" display appears again after 5 seconds.
0	1	Clock display	Each time the DISP key is pressed, the display is toggled as follows: →"TAPE"→ frequency → clock → If no key is pressed during frequency or "TAPE" display, the clock display appears again after 5 seconds.

(1: Shorted by the diode; 0: Open)

When radio-monitor tape mode is selected, the display begins with the frequency.

www.DataSheet4U.com

<table>
<tr><th>Momentary key</th><th>Description</th></tr>
<tr><td>DISP</td><td>

www.DataSheet4U.com

(5) In radio-monitor CD mode

Each time the DISP key is pressed, the display switches among "CD", frequency, and clock.
The operation depends on the states of the PRIO1 and PRIO2 initial setting diodes as follows:

<table>
<tr><th>PRIO1</th><th>PRIO2</th><th>Privileged display</th><th>Description</th></tr>
<tr><td>0</td><td>0</td><td>None</td><td>Each time the DISP key is pressed, the display is toggled as follows:
→"CD" → frequency → clock →</td></tr>
<tr><td>1</td><td>0</td><td>"CD" display</td><td>Each time the DISP key is pressed, the display is toggled as follows:
→"CD" → frequency → clock →
If no key is pressed during frequency or clock display, the "CD" display appears again after 5 seconds.</td></tr>
<tr><td>0</td><td>1</td><td>Clock display</td><td>Each time the DISP key is pressed, the display is toggled as follows:
→"CD" → frequency → clock →
If no key is pressed during frequency or "CD" display, the clock display appears again after 5 seconds.</td></tr>
</table>

(1: Shorted by the diode; 0: Open)

When radio-monitor CD mode is selected, the display begins with the frequency.

(6) During clock display

The DISP key is used to adjust the clock.
The minute and hour displays are adjusted by pressing the MAN UP and MAN DWN keys with the DISP key held pressed, as follows:

- **Hour adjustment**
  Each time the MAN DWN key is pressed, the hour display is incremented by one. Keeping the key pressed for at least 0.5 seconds increments the hour display at a rate of four per second (one per 250 ms). The continuous increment continues until the key is released. The minute display, second count, or pointer movement is not affected.
- **Minute adjustment**
  Each time the MAN UP key is pressed, the minute display is incremented by one. Keeping the key pressed for at least 0.5 seconds increments the minute display at a rate of eight per second (one per 125 ms). The continuous increment continues until the key is released. No carry-over occurs to the hour display. The second count is reset to 0 at each adjustment.

</td></tr>
</table>

www.DataSheet4U.com

www.DataSheet4U.com

Momentary key	Description
DSP	Pressing the DSP key switches the output of the DSP1 and DSP2 pins, as follows. The initial value is NORMAL. While the power is off, the output mode is NORMAL.

DSP1	DSP2	Output mode
0	0	NORMAL
0	1	CLASSIC
1	0	ROCK
1	1	POP

(1: Shorted by the diode; 1: Open)
In radio, tape, and CD modes, the output mode which was used last is recorded in memory for each mode.

Example Radio mode (CLASSIC) → Tape mode (ROCK) → Radio mode (CLASSIC)
Last state → (CLASSIC)

In radio, tape, or CD mode, "NORMAL," "CLASSIC," "ROCK," or "POP" is displayed, according to the output mode.

LOUD/ ILLUMI- NATION

Key for switching LOUD (loudness) control and illumination control.

(1) Loudness control

It is effective in radio, tape, and CD modes.
Each time the LOUD/ILLUMINATION key is pressed, the control of loudness and the electronic volume control loudness function are switched on or off.
The following table lists the states of loudness, “LOUD” display, the LOUD pin output, and the electronic volume control IC.

Loudness state	“LOUD” display	LOUD pin	Electronic volume control IC state
ON	Lights	High level	Loudness ON mode[Note]
OFF	Does not light	Low level	Loudness OFF mode[Note]

Switching radio, tape, or CD mode does not affect the state of loudness.

Note In loudness ON mode, set the gain of the electronic volume to +7.5 dB.
In loudness OFF mode, set the gain of the electronic volume to 0 dB.

(2) Illumination control

Illumination control is effective in radio, tape, and CD modes.
When this key is pressed and held down for two seconds or more, the previous ILLUMI output is inverted. The initial value is low-level output. The illumination control, however, can be enabled or disabled by using the ILLA and ILLB initial setting diodes (see **Section 2.6.1**).

www.DataSheet4U.com

Momentary key	Description
M1 M2 M3 M4 M5 M6	In radio mode, these keys are used to access a preset memory and control whether to enable writing to it. In tape mode, the M5 keys are used for a tape function (MTL) key depending on the settings of the KTAPE initial setting diode. **(1) In radio, radio-monitor tape, and radio-monitor CD modes** The M1 to M6 keys are used to access a preset memory and control whether to enable writing to it. Each key can be set to the FM1, FM2, FM3, MW1, MW2 and LW bands (up to six bands) separately. The functions of these keys are as follows:

	Description
Writing	Keeping one of the M1 to M6 keys pressed for at least 2 seconds writes a frequency to the preset memory corresponding to the pressed key. When writing to the preset memory is completed, the radio mute signal is output as acknowledgment. **Example** 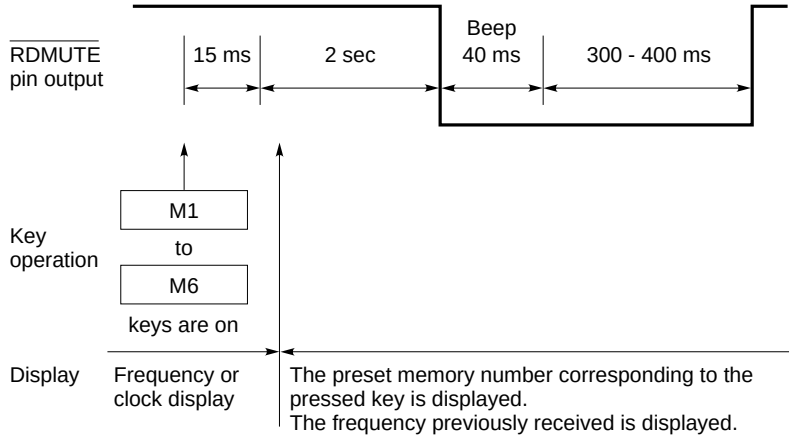 When the frequency recorded in the currently selected preset memory is being received, pressing the key corresponding to this preset memory does not trigger any operation except during clock display. During clock display, pressing the key not only generates a beep but also switches to the frequency display. Pressing the key, however, does not generate the radio mute signal. During the seek operation, pressing the key immediately accesses the preset memory (without waiting 2 seconds).

www.DataSheet4U.com

Momentary key	Description
M1 M2 M3 M4 M5 M6	Description

Calling

Pressing one of the M1 to M6 keys and releasing it within 2 seconds calls the content of the corresponding preset memory when the key is released.

Example

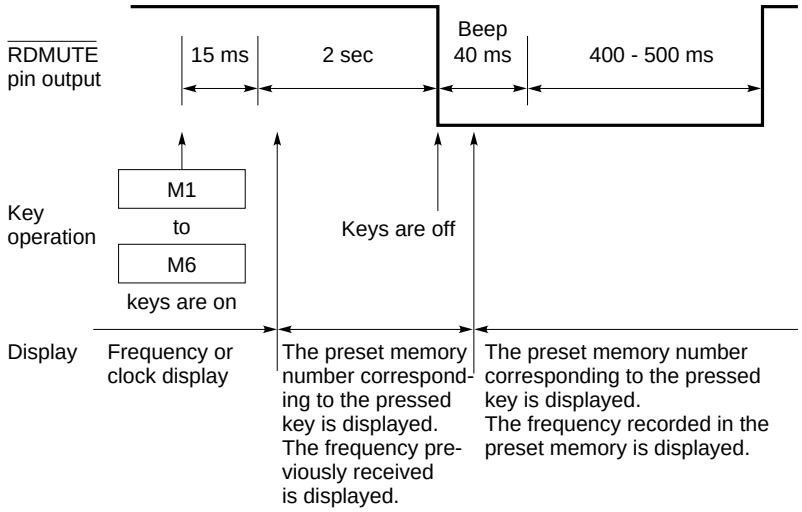

When the frequency recorded in the currently selected preset memory is being received, pressing the key corresponding to this preset memory does not trigger any operation except during clock display. During clock display, pressing the key not only generates a beep but also switches to the frequency display. Pressing the key, however, does not generate the radio mute signal.

During the seek operation, pressing the key immediately accesses the preset memory.

www.DataSheet4U.com

Momentary key	Description
M1 M2 M3 M4 M5 M6	When power is applied, the frequencies listed below are written to the M1 to M6 preset memories for convenience of set adjustment.

Area \ Memory / Band		M1	M2	M3	M4	M5	M6
Eastern Europe	FM1(MHz)	65.0	67.0	68.5	70.5	72.5	74.0
	FM2(MHz)	87.5	87.7	92.3	96.3	105.9	87.5
	MW1(kHz)	522	603	954	1 386	522	522
	MW2(kHz)	522	621	1 098	1 530	522	522
	LW(kHz)	144	155	208	256	144	144
Western Europe	FM1(MHz)	87.5	87.7	92.3	96.3	105.9	87.5
	MW1(kHz)	522	603	954	1 386	522	522
	MW2(kHz)	522	621	1 098	1 530	522	522
	LW(kHz)	144	155	208	256	144	144
USA 1, USA 2, and USA 3	FM1(MHz)	87.5	87.9	97.1	105.1	87.5	87.5
	MW1(kHz)	530	620	1 010	1 490	530	530
Australia Middle and Near East	FM1(MHz)	87.5	87.9	97.1	105.1	87.5	87.5
	MW1(kHz)	531	612	963	1 395	531	531
Japan	FM1(MHz)	76.0	76.4	85.6	76.0	76.0	76.0
	MW1(kHz)	522	603	954	1 386	522	522
China	FM1(MHz)	87.0	87.7	92.3	87.0	87.0	87.0
	MW1(kHz)	531	540	585	531	531	531

The lowest frequency for each area is written to the M1 to M6 preset memories for the MW2 band for the areas other than Europe 1 or Europe 2 and for the FM2 and FM3 bands.

○ **Operation in tape mode**

The M5 key may also be used as the tape function (MTL) key depending on the states of the KTAPE initial setting diode. See **Section 2.6.1** for details. See also the descriptions of the MTL key.

www.DataSheet4U.com

Momentary key	Description
MAN UP MAN DWN	The MAN UP and MAN DWN keys are used to increment and decrement the reception frequency in radio mode, respectively. During clock display, they are also used in connection with the DISP key to adjust the clock. They are again used to increase/decrease the volume of sound during electronic volume control if VKYSEL = 1.

(1) In radio, radio-monitor tape, and radio-monitor CD modes

Either of the following operations occurs depending on the state of the AUTO500 initial setting diode.

AUTO500	Description
0	Each time the MAN UP or MAN DWN key is pressed, the frequency counter is incremented (MAN UP key) or decremented (MAN DWN key) by one step (one channel space). Keeping the key pressed for at least 0.5 seconds speeds the increment/decrement to a rate of one step per 50 ms.
1	Each time the MAN UP or MAN DWN key is pressed, the frequency counter is incremented (MAN UP key) or decremented (MAN DWN key) by one step (one channel space). Keeping the MAN UP key pressed for at least 0.5 seconds triggers a seek operation in seek-up mode. This seek operation is the same as that triggered by the SEEK UP key.

(1: Shorted by the diode; 0: Open)

(2) While "TAPE" is displayed in tape mode or "CD" is displayed in CD mode

The MAN UP and MAN DWN keys are ineffective.

(3) During clock display

While the DISP key is held pressed during clock display, pressing the MAN UP and MAN DWN keys enables adjusting the minute and hour displays, respectively. See the description of the DISP key for how to adjust the minute and hour displays.

(4) When the electronic volume control function is effective and VKYSEL = 1:

The MAN UP and MAN DWN keys are used to adjust (increase and decrease) the volume of sound in the electronic volume control mode selected using the VOL SEL key.

Once an electronic volume control mode is selected using the VOL SEL key, the MAN UP and MAN DWN keys function in the same way as the VOL UP and VOL DWN keys.

In a mode other than an electronic volume control mode, the MAN UP or MAN DWN key does not function as a volume control.

Pressing the MAN UP key works for each electronic volume control mode as follows:

Mode	Function
Volume	Increases the main sound volume.
Bass	Increases the bass.
Treble	Increases the treble.
Balance	Emphasizes the sound volume from the right-side speaker.
Fader	Emphasizes the sound volume from the front speaker.

www.DataSheet4U.com

<table>
<tr><th>Momentary key</th><th>Description</th></tr>
<tr><td>MAN UP
MAN DWN</td><td>Pressing the MAN DWN key works for each electronic volume control mode as follows:
<table>
<tr><th>Mode</th><th>Function</th></tr>
<tr><td>Volume</td><td>Decreases the main sound volume.</td></tr>
<tr><td>Bass</td><td>Decreases the bass.</td></tr>
<tr><td>Treble</td><td>Decreases the treble.</td></tr>
<tr><td>Balance</td><td>Emphasizes the sound volume from the left-side speaker.</td></tr>
<tr><td>Fader</td><td>Emphasizes the sound volume from the rear speaker.</td></tr>
</table></td></tr>
<tr><td>MONO/LOC</td><td>The MONO/LOC key controls MONO (monaural)/STEREO mode and local (local/DX) mode.
(1) Monaural mode control
When this key is pressed and held down for two seconds or more, MONO and STEREO modes can be switched.
The key is effective, when the current mode is radio, radio-monitor CD, or radio-monitor tape mode and the FM or MW band is selected. (For the MW band, the key is effective if the MWS initial setting diode = 1 and the tuner has a stereo capability.)
Each time the key is pressed, switching occurs between MONO and STEREO modes.
The following table lists MONO/STEREO mode and the states of the “ST” display and “MONO” display.
<table>
<tr><th>MONO/
STEREO mode</th><th>“ST” display</th><th>“MONO” display</th></tr>
<tr><td>MONO</td><td>Does not light</td><td>Lights</td></tr>
<tr><td>STEREO</td><td>Lights</td><td>Does not light</td></tr>
</table>
(2) Local mode control
The key is effective when the current mode is radio, radio-monitor CD, or radio-monitor tape mode and when AUTOLOC initial setting diode = 0.
Each time the key is pressed, switching occurs between local and DX modes (only when the key is released within two seconds).
The following table lists local/DX mode, the state of the “LOC” display, and LOC pin output.
<table>
<tr><th>Local/DX mode</th><th>“LOC” display</th><th>LOC pin</th></tr>
<tr><td>LOCAL</td><td>Lights</td><td>High level[Note]</td></tr>
<tr><td>DX</td><td>Does not light</td><td>Low level</td></tr>
</table>
Note A high level is output only during auto-tuning. The LOC pin is always at a low level during a tuning type other than auto-tuning.
See the description of the LOC in Chapter 1.</td></tr>
<tr><td>MTL</td><td>The MTL key controls MTL (METAL) mode. It is effective when the current mode is radio or radio-monitor tape mode. Each time the key is pressed, METAL mode is switched on or off.
The following table lists METAL mode on/off, the states of the “METAL” display, and METAL pin output.
<table>
<tr><th>METAL mode</th><th>“METAL” display</th><th>METAL pin</th></tr>
<tr><td>ON</td><td>Lights</td><td>High level</td></tr>
<tr><td>OFF</td><td>Does not light</td><td>Low level</td></tr>
</table></td></tr>
</table>

www.DataSheet4U.com

<table>
<tr><th>Momentary key</th><th>Description</th></tr>
<tr><td>MUTE</td><td>The MUTE key controls the electronic volume control mute function. Pressing the MUTE key in a mode other than mute mode selects mute (silent) mode. In mute mode, the volume value is displayed, and the display is caused to blink.
The mute function is reset under the following conditions.
● When an effective key other than the DISP key is pressed
● When the mode is changed
● When a station is detected during a seek or scan operation, with the MUTE pressed.
● When the MUTE key is pressed during muting</td></tr>
<tr><td>POWER</td><td>The POWER key is used to control the power-on/off of the radio in momentary key mode. It is effective when the IGNITION pin is at a high level. Pressing this key inverts the output of the POWER pin.
When the POWER pin output is set to low (the power is turned off), the tape recorder, CD player and radio are forced to be turned off even when they have been in the power-on state. In this case, they are turned off with or without clock display, according to whether they were in clock mode or non-clock mode.
The power-on mode varies as follows according to the state of the RDSET, TPSET, and CDSET switches.
<table>
<tr><th>Mode</th><th>REDSET</th><th>TPSET</th><th>CDSET</th></tr>
<tr><td>Radio mode</td><td>ON</td><td>OFF</td><td>OFF</td></tr>
<tr><td>Tape mode</td><td>ON/OFF</td><td>ON</td><td>OFF</td></tr>
<tr><td>CD mode</td><td>ON/OFF</td><td>ON/OFF</td><td>ON</td></tr>
</table>
Caution At the initial power-on, the POWER pin outputs the high level. When the level of IGNITION pin changes from low to high, the POWER pin outputs the level which have been set before IGNITION becomes low, until the primary power supply is turned off.</td></tr>
<tr><td>P.SCAN</td><td>This key functions as a preset scan and auto-storage key. The operation triggered by the key varies depending on the state of the DISAMEMO initial setting diode.

(1) When DISAMEMO = 0 (with the auto-storage function):
The operation varies depending on the timing at which the key is operated.
(a) If the key is released within 2 seconds:
The preset scan operation begins immediately when the key is released.
(b) If the key is pressed for at least 2 seconds:
The auto-storage operation begins when 2 seconds elapse.
(2) When DISAMEMO = 1 (without the auto-storage function):
The preset scan operation begins immediately when the key is pressed.

The preset scan and auto-storage functions are described below.
○ Preset scan operation
The contents of each preset memory are called for 5 seconds each time automatically.
If a frequency other than those in the preset memories is being received, calling begins at M1. If a frequency recorded in a preset memory is being received, calling begins at the preset memory numbered one higher than that preset memory (for example, at the M4 preset memory if a frequency recorded in the M3 preset memory is being received). This operation is illustrated below.

Example If the FM1 band is being received:
FM1
→ M1 → M2 → M3 → M4 → M5 → M6 →</td></tr>
</table>

www.DataSheet4U.com

<table>
<tr><th>Momentary key</th><th>Description</th></tr>
<tr><td>P.SCAN</td><td>
www.DataSheet4U.com
The same operation occurs for the MW (MW1 and MW2) and LW bands.
When the next preset memory is accessed after a 5-second hold period, a beep is generated. During each 5-second period, the preset memory number display blinks at 1 Hz (with a duty cycle of 50%). The “CH” display does not blink.
To stop preset memory scanning during a 5-second hold period, press the P. SCAN key again or a preset memory key that corresponds to the preset memory being currently accessed. It is possible to write to a preset memory when another preset memory is on hold (for example, write to the M5 when the M1 is on hold). When a write operation is completed, the preset scan operation ends.
Hold down one of the M1 to M6 keys for at least 2 seconds during the preset scan operation. The frequency currently being received is written into the preset memory corresponding to the pressed key. The preset scan operation ends immediately when any of these keys is pressed.

During the preset scan, each key functions as follows:

<table>
<tr><th>Key</th><th>Description</th></tr>
<tr><td>P.SCAN</td><td>The scan operation stops, and the current frequency is received.</td></tr>
<tr><td>SCAN UP
SCAN DWN
SEEK UP
MAN UP
MAN DWN</td><td>The scan operation stops, the operation corresponding to the pressed key begins at the frequency being currently received.</td></tr>
<tr><td>BAND</td><td>In radio, radio-monitor tape, and radio-monitor CD modes, the scan operation stops, and the operation corresponding to the pressed key begins at the frequency being currently received.</td></tr>
<tr><td>RDMONI</td><td>Either of the following operations occurs depending on what the current mode is.
(1) In radio mode
The scan operation continues. The RDMONI key becomes ineffective.
(2) In radio-monitor tape and radio-monitor CD modes
The scan operation stops, and the operation corresponding to the pressed key begins at the frequency being currently received.</td></tr>
<tr><td>LOUD/
ILLUMI-
NATION
POWER</td><td>The scan operation continues. The operation corresponding to the pressed key begins.</td></tr>
<tr><td>MONO/LOC</td><td>Either of the following operations occurs depending on the state of the AUTOLOC initial setting diode.
(1) When AUTOLOC = 0:
The scan operation continues. The operation corresponding to the MONO/LOC key begins.
(2) When AUTOLOC = 1:
The scan operation continues. The MONO/LOC key becomes ineffective.</td></tr>
<tr><td>M1
M2
M3
M4
M5
M6</td><td>In radio, radio-monitor tape, and radio-monitor CD modes, the scan operation stops. The other operations vary depending on the timing at which the key is released.
● If the key is released within 2 seconds:
The preset memory corresponding to the pressed key is accessed.
● If the key is kept pressed for at least 2 seconds:
A frequency being currently received is written to the preset memory corresponding to the pressed key.</td></tr>
</table>
</td></tr>
</table>

www.DataSheet4U.com

Momentary key	Description
P.SCAN	○ **Auto-storage function** Broadcasting stations are searched for automatically. The frequency of a detected station is written to a preset memory. A method used to detect a station is determined according to the states of the ENAMIF and ENFMIF initial setting diodes. A broadcasting station search begins at the frequency being currently received and is performed through the frequencies in the ascending order. When a station is detected, its frequency is written to a preset memory. For the voltage with SD, see the description of the **SD** in **Chapter 1**. The auto-storage operation varies depending on the state of the AUTOLOC initial setting diode as follows: **(1) When AUTOLOC = 0 (with no auto local function):** The auto-storage function varies depending on which mode has been selected, local or DX, when the function begins. **(a) If DX mode has been selected when the auto-storage function starts:** A search beings at the frequency being currently received and continues in the ascending order of the frequency. When all frequencies are searched through, the search operation ends. If the P. SCAN key is pressed during the search operation, the auto-storage operation ends, and the frequency selected when the auto-storage operation began is received. When all frequencies are searched through, if at least one station is detected, the contents of the preset memories are updated, and the preset scan begins at the M1 preset memory. How the contents of the preset memories are updated varies depending on the number of stations detected. ○ **If six or more stations are detected:** If six or more stations are detected, six stations with a higher SD input are selected and written to the preset memories. A lower frequency is written to a lower-numbered preset memory. ○ **If less than six stations are detected:** If less than six stations are detected, lower frequencies are written to lower-numbered preset memories. The contents of a preset memory will not be changed if there is no frequency corresponding to it. **(b) If local mode has been selected when the auto-storage function starts:** A search begins in local mode at the frequency being currently received and continues in the ascending order of the frequency. When all frequencies are searched through, if six or more stations are not detected, the search switches to DX mode and continues in it. If six or more stations are detected in local mode, or all frequencies are searched through in DX mode, the auto-storage operation ends. Pressing the P. SCAN key during the search operation stops the auto-storage operation, and causes the frequency selected when the auto-storage memory began to be received. If six or more stations are detected in local mode, or all frequencies are searched through in DX mode, the auto-storage operation ends. If at least one station is detected, the contents of the preset memories are updated, and the preset scan begins with the M1 preset memory. How the contents of the preset memories are updated varies depending on the number of stations detected, as follows: ○ **If six or more stations are detected in local mode:** If six or more stations are detected, six stations with a higher SD input are selected and written to the preset memories. A lower frequency is written to a lower-numbered preset memory ○ **If less than six stations are detected in local mode and some are detected in DX mode, resulting in a total of six or more stations being detected:** Stations detected in DX mode with higher SD input levels are selected and added to the number of stations detected in local mode so that the total becomes six. In this case, the stations detected in local mode are excluded from those detected in DX mode. The frequencies of the six stations are written to the preset memories, with a lower frequency written to a lower-numbered preset memory.

www.DataSheet4U.com

Momentary key	Description
P.SCAN	○ **If less than six stations are detected in local mode and some are detected in DX mode, resulting in a total of less than six stations being detected:** If the same station is detected in DX and local modes, the station detected in DX mode is deleted so that the same frequency will not be written to two preset memories. The frequencies of the less than six stations detected are written to the preset memories, with a lower frequency written to a lower-numbered preset memory. The contents of a preset memory will not be changed if there is no frequency corresponding to it.

www.DataSheet4U.com

(2) When AUTOLOC = 1 (with the local function):

A search begins in local mode at the frequency being currently received and continues in the ascending order of the frequency. When all frequencies are searched through, if six or more stations are not detected, the search switches to DX mode and continues in it. If six or more stations are detected in local mode, or all frequencies are searched through in DX mode, the auto-storage operations ends.
Pressing the P. SCAN key in local mode switches to DX mode, and restarts the search operation at the frequency selected when the previous search began. Any stations detected in local mode are made ineffective. (Stations detected in local mode are excluded during preset memory updating.)
Pressing the P. SCAN key in DX mode ends the auto-storage operation, and causes the frequency selected when the auto-storage operation began to be received.
If six or more stations are detected in local mode, or all frequencies are searched through in DX mode, the auto-storage operation ends. If at least one station is detected, the contents of the preset memories are updated, and the preset scan begins with the M1 preset memory.
How the contents of the preset memories are updated varies depending on the number of stations detected, as follows:

- ○ **If six or more stations are detected in local mode:**
  If six or more stations are detected in local mode, six stations with a higher SD input are selected and written to the preset memories, with a lower frequency written to a lower-numbered preset memory.
- ○ **If less than six stations are detected in local mode, and some are detected in DX mode, resulting in a total of six or more stations being detected:**
  Stations detected in DX mode with higher SD input levels are selected and added to the number of stations detected in local mode so that the total becomes six. In this case, the stations detected in local mode are excluded from those detected in DX mode.
  The frequencies of the six stations are written to the preset memories, with a lower frequency written to a lower-numbered preset memory.
- ○ **If less than six stations are detected in local mode and some are detected in DX mode, resulting in a total of less than six stations being detected:**
  If the same station is detected in DX and local modes, the station detected in DX mode is deleted so that the same frequency will not be written to two preset memories. The frequencies of the less than six stations detected are written to the preset memories, with a lower frequency written to a lower-numbered preset memory. The contents of a preset memory will not be changed if there is no frequency corresponding to it.

www.DataSheet4U.com

www.DataSheet4U.com

Momentary key	Description
P.SCAN	During the auto-storage operation, each key function as follows:

Key	Description
P.SCAN	The auto-storage operation stops, the frequency selected when the auto-storage operation began is received. If the auto local function is being used, local mode is selected.
BAND	In radio, radio-monitor tape, and radio-monitor CD modes, the auto-storage operation stops, the operation corresponding to the BAND key begins at the frequency selected when the auto-storage operation began.
SCAN UP SCAN DWN SEEK UP MAN UP MAN DWN	The auto-storage operation stops, the operation corresponding to the pressed key begins at the frequency selected when the auto-storage operation began.
RDMONI	Either of the following operations occurs depending on what the current mode is. **(1) In radio-monitor tape and radio-monitor CD modes** The auto-storage operation stops, the operation corresponding to the RDMONI key begins at the frequency selected when the auto-storage operation began. **(2) In radio mode** The auto-storage operation continues. The RDMONI key becomes ineffective.
LOUD/ ILLUMI- MATION POWER	The auto-storage operation continues. The operation corresponding to the pressed key begins.
MONO/LOC	Either of the following operations occurs depending on the state of the AUTOLOC initial setting diode. **(1) When AUTOLOC = 0:** Switching occurs between local and DX modes. All stations detected so far are canceled. **(2) When AUTOLOC = 1:** The auto-storage operation continues. The MONO/LOC key becomes ineffective.
M1 to M6	The auto-storage operation stops. The set tunes itself to the frequency recorded in the preset memory corresponding to the pressed key.

www.DataSheet4U.com

<table>
<tr><th>Momentary key</th><th>Description</th></tr>
<tr><td>RDMONI</td><td>The RDMONI key controls radio monitoring. It is effective in tape, CD, radio-monitor tape, or radio-monitor CD mode. Each time the key is pressed, radio monitor mode is set or reset. In radio monitor mode, the “RDMONI” display on the LCD panel lights.
In radio monitor mode, tuning is enabled for all bands, the radio mute function ($\overline{\text{RDMUTE}}$ pin) is switched off, and the audio mute function ($\overline{\text{AMUTE}}$ pin) is switched on.
Radio monitor mode is reset by:
● Change in the TPSET switch state
● Change in the CDSET switch state
● Change at the CE pin from high level to low levelNote

Note When using alarm mode, always pull up the CE pin.</td></tr>
<tr><td>SCAN UP
SCAN DWN</td><td>The SCAN UP and SCAN DWN keys are used for auto-tuning (scan operation).
Pressing the SCAN UP key (SCAN DWN key) increases (decreases) the frequency by one channel space and checks whether there is a broadcasting station at each reception frequency (frequency counter and SD signal). If a broadcasting station is detected, the corresponding frequency is held for five seconds. If no key is pressed within this hold time of five seconds, the seek operation restarts. If another broadcasting station is detected, the corresponding frequency is held in the frequency counter for five seconds. This operation is repeated (scan operation) sequentially.
The frequency display blinks at 1 Hz (with a duty cycle of 50%) during the five-second hold time. A beep occurs at the end of the hold time.
The seek operation here is the same as one performed with the SEEK UP key.
The following table lists the operation corresponding to each key pressed during the seek operation (except the hold time).
<table>
<tr><th>Key</th><th>Description</th></tr>
<tr><td>SCAN UP
SCAN DWN</td><td>● If the SCAN UP key is pressed in scan-up mode, or the SCAN DWN key is pressed in scan-down mode:
The scan operation stops, and the frequency that was selected when the scan operation began is reselected. If the auto local function is being used, local mode is switched.
● If the SCAN DWN key is pressed in scan-up mode, or the SCAN UP key is pressed in scan-down mode:
The operation corresponding to the pressed key begins at the frequency that is selected when the key is pressed.</td></tr>
<tr><td>SEEK UP
MAN UP
MAN DWN
P.SCAN</td><td>The scan operation stops, and the operation corresponding to the pressed key begins at the frequency that is selected when the key is pressed.</td></tr>
<tr><td>BAND</td><td>In radio, radio-monitor tape, and radio-monitor CD modes, the scan operation stops. The frequency that was selected when the scan operation began (or the frequency on hold if a broadcasting station has been detected during the scan operation) is reselected, and the operation corresponding to the pressed key begins.</td></tr>
<tr><td>RDMONI</td><td>Either of the following operations occurs depending on what the current mode is.
(1) In radio-monitor tape and radio-monitor CD modes
The scan operation stops. The frequency that was selected when the scan operation began (or the frequency on hold if a broadcasting station has been detected during the scan operation) is reselected, and the operation corresponding to the pressed key begins.
(2) In radio mode
The seek operation continues, and the key becomes an ineffective key.</td></tr>
</table>
</td></tr>
</table>

www.DataSheet4U.com

www.DataSheet4U.com

Momentary key	Description
SCAN UP SCAN DWN	

Key	Description
LOUD/ ILLUMI- NATION POWER	The scan operation continues, and the operation corresponding to the pressed key begins.
MONO/LOC	Either of the following operations occurs depending on the state of the AUTOLOC initial setting diode. **(1) When AUTOLOC = 0:** The scan operation continues, and the operation corresponding to the key begins. **(2) When AUTOLOC = 1:** The scan operation continues, and the key becomes invalid.
M1 to M6	The scan operation stops. The set tunes itself to the frequency recorded in the preset memory corresponding to the pressed key.

www.DataSheet4U.com

<table>
<tr><th>Momentary key</th><th>Description</th></tr>
<tr><td>SCAN UP
SCAN DWN</td><td>Each key functions during the five-second hold time as follows:
<table>
<tr><th>Key</th><th>Description</th></tr>
<tr><td>SCAN UP
SCAN DWN</td><td>● If the SCAN UP key is pressed in scan-up mode, or the SCAN DWN key is pressed in scan-down mode:
The scan operation stops, and the frequency counter is set to the frequency on hold.
● If the SCAN DWN key is pressed in scan-up mode, or the SCAN UP key is pressed in scan-down mode:
The operation corresponding to the pressed key begins.</td></tr>
<tr><td>SEEK UP
MAN UP
MAN DWN
P.SCAN</td><td>The scan operation stops, and the operation corresponding to the pressed key begins at the frequency on hold.</td></tr>
<tr><td>BAND</td><td>In radio, radio-monitor tape, and radio-monitor CD modes, the scan operation stops. The operation corresponding to the pressed key begins at the frequency on hold.</td></tr>
<tr><td>RDMONI</td><td>Either of the following operations occurs depending on what the current mode is.
(1) In radio-monitor tape and radio-monitor CD modes
The scan operation stops. The operation corresponding to the pressed key begins at the frequency on hold.
(2) In radio mode
The seek operation continues, and the key becomes an ineffective key.</td></tr>
<tr><td>LOUD/
ILLUMI-
NATION
POWER</td><td>The scan operation continues. The operation corresponding to the pressed key begins.</td></tr>
<tr><td>MONO/LOC</td><td>Either of the following operations occurs depending on the state of the AUTOLOC initial setting diode.
(1) When AUTOLOC = 0:
The scan operation continues, and the operation corresponding to the pressed key begins.
(2) When AUTOLOC = 1:
The scan operation continues, and the pressed key becomes an ineffective key.</td></tr>
</table></td></tr>
</table>

www.DataSheet4U.com

Momentary key	Description
SCAN UP SCAN DWN	

Key	Description
M1 to M6	The scan operation stops. Either of the following operations occurs depending on the timing at which the key is released. ○ **If the key is released within 2 seconds:** A preset memory corresponding to the pressed key is accessed. ○ **If the key is held pressed for at least 2 seconds:** The frequency being currently received is written to the preset memory corresponding to the pressed key.

Example 1. If the key is released within 2 seconds:
The tuner is set to the frequency in the preset memory corresponding to the pressed key when the key is released. The scan operation is canceled.

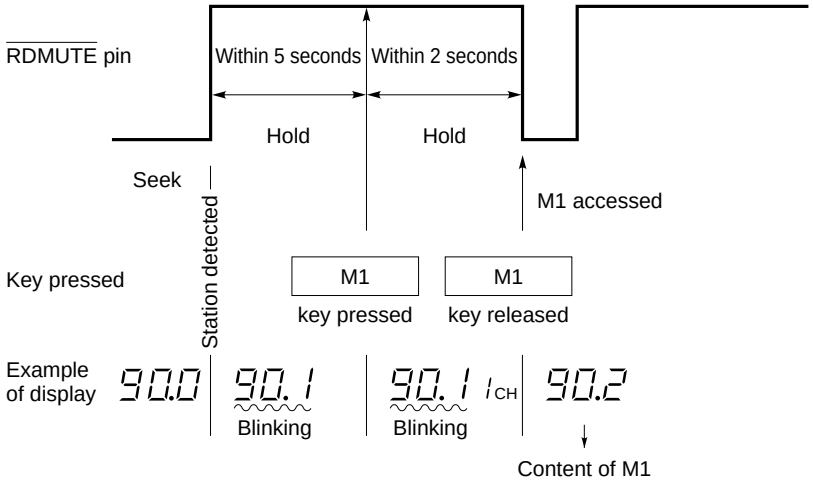

2. If the key is pressed for at least 2 seconds:
When the key is pressed for 2 seconds, the frequency on hold is written to the preset memory corresponding to the pressed key. The hold state is released 2 seconds after the writing to the preset memory, and a search (seek operation) for another station begins.

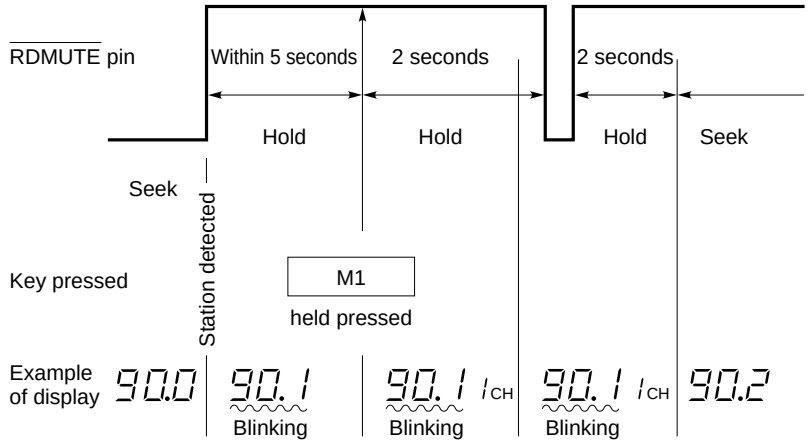

www.DataSheet4U.com

<table>
<tr><th>Momentary key</th><th>Description</th></tr>
<tr><td>SEEK UP</td><td>
www.DataSheet4U.com
The SEEK UP key is used for auto-tuning (seek operation).
Pressing the SEEK UP key increases the frequency by one channel space and checks whether there is a broadcasting station at each reception frequency (by a method determined depending on the states of the ENAMIF and ENFMIF initial setting diodes). If a broadcasting station is detected, the seek operation ends. The seek operation performed varies with the state of the AUTOLOC initial setting diode as follows:

(1) When AUTOLOC = 0 (with no auto local function):
A search operation begins at the frequency currently being received.
The search operation continues in local or DX mode whichever has been selected when the search operation starts, until a station is detected.

(2) When AUTOLOC = 1 (with an auto local function):
A search operation begins at the frequency being currently received in local mode. When all frequencies are searched through in local mode, a search operation is switched to DX mode and continues until a station is detected. If the SEEK UP key is pressed in local mode, DX mode is selected, and a search operation restarts with the same frequency as for the previous search. If the SEEK UP key is pressed during a search in DX mode, the search operation ends, and the frequency at which the search operation began is selected.

When using the SEEK UP key, set the AUTO500 initial setting diode to 0. Setting it to 1 disables the SEEK UP key.
The SEEK UP key functions during the search operation as follows:

<table>
<tr><th>Key</th><th>Description</th></tr>
<tr><td>SEEK UP</td><td>When the SEEK UP key is pressed in seek-up mode, the seek operation stops, and the frequency at which the search operation began is selected. If the auto local function is being used when the key is pressed, local mode is switched.</td></tr>
<tr><td>MAN UP
MAN DWN</td><td>One of the following operations occurs depending on the state of the AUTO500 initial setting diode.
(1) When AUTO500 = 0:
A manual tuning operation begins at the frequency that is in the frequency counter when the key is pressed.
(2) When AUTO500 = 1:
If the MAN UP key is pressed in seek-up mode, the seek operation stops, and the frequency that was selected when the seek operation began is reselected. If the auto local function is being used, local mode is switched.</td></tr>
<tr><td>SCAN UP
SCAN DWN
P.SCAN</td><td>The seek operation stops, and the operation corresponding to the pressed key begins at the frequency that was selected when the key was pressed.</td></tr>
<tr><td>BAND</td><td>In radio, radio-monitor tape, and radio-monitor CD modes, the seek operation stops. The frequency that was selected when the seek operation began is reselected, and the operation corresponding to the pressed key begins.</td></tr>
<tr><td>RDMONI</td><td>Either of the following operations occurs according to what the current mode is.
(1) In radio-monitor tape and radio-monitor CD modes
The seek operation stops. The frequency that was selected when the seek operation began is reselected, and the operation corresponding to the pressed key begins.
(2) In radio mode
The seek operation continues, and the key becomes an ineffective key.</td></tr>
</table>
</td></tr>
</table>

www.DataSheet4U.com

<table>
<tr><th>Momentary key</th><th>Description</th></tr>
<tr><td>SEEK UP</td><td>
<table>
<tr><th>Key</th><th>Description</th></tr>
<tr><td>LOUD/
ILLUMI-
NATION
POWER</td><td>The seek operation continues, and the operation corresponding to the pressed key begins.</td></tr>
<tr><td>MONO/LOC</td><td>Either of the following operations occurs depending on the state of the AUTOLOC initial setting diode.
(1) When AUTOLOC = 0:
The seek operation continues, and the operation corresponding to the key begins.
(2) When AUTOLOC = 1:
The seek operation continues, and the pressed key becomes invalid.</td></tr>
<tr><td>M1
to
M6</td><td>The seek operation stops. The set tunes itself to the frequency recorded in the preset memory corresponding to the pressed key.</td></tr>
</table>
</td></tr>
<tr><td>VOL DWN</td><td>The VOL DWN key is used to adjust the volume of sound in each electronic volume control mode. The operation depends on the state of the VKYSEL initial setting diode.
<table>
<tr><th>VKYSEL</th><th>Description</th></tr>
<tr><td>0</td><td>Pressing the VOL DWN key in a mode other than an electronic volume control mode selects volume mode and increases the volume of sound.
In an electronic volume control mode selected by the VOL SEL key, pressing the VOL DWN key activates the operation corresponding to the selected mode as follows:
<table>
<tr><th>Mode</th><th>Function</th></tr>
<tr><td>Volume</td><td>Decreases the main sound volume.</td></tr>
<tr><td>Bass</td><td>Decreases the bass.</td></tr>
<tr><td>Treble</td><td>Decreases the treble.</td></tr>
<tr><td>Balance</td><td>Emphasizes the sound volume from the left-side speaker.</td></tr>
<tr><td>Fader</td><td>Emphasizes the sound volume from the rear speaker.</td></tr>
</table>
Keeping the VOL DWN key pressed for at least 0.5 seconds controls the volume continuously.
If no key is pressed for at least 3 seconds, the mode previous to the current electronic volume control mode is reselected.</td></tr>
<tr><td>1</td><td>The VOL DWN key is ineffective. After an electronic volume control mode is selected using the VOL SEL key, the MAN DWN key can be used to perform the same adjustment that would be performed using the VOL DWN key.
Pressing the MAN DWN key in a mode other than an electronic volume control mode does not select volume mode. See the descriptions of the MAN UP and MAN DWN keys for details.</td></tr>
</table>
(1: Shorted by the diode; 0: Open)</td></tr>
</table>

www.DataSheet4U.com

Momentary key	Description
VOL SEL	The VOL SEL key is used to select an electronic volume control mode. There are five electronic volume control modes as listed below:

Mode	Function	Panel display (initial setting)
Volume	Controls the main sound volume.	VOL 16
Bass	Controls the bass.	BAS 0
Treble	Controls the treble.	TRE 0
Balance	Controls the sound volume from the right- and left-side speakers.	BA C 0
Fader	Controls the sound volume from the front and rear speakers.	FA C 0

Either of the modes listed below is selected depending on the state of the VKYSEL initial setting diode. Each time the VOL SEL key is pressed, the mode switches as listed below.

VKYSEL	Description
0	The first mode selected is bass mode. VOL SEL 1 PUSH START → Bass → Tremble → Balance ↑ ↓ Volume ← Fader
1	The first mode selected is volume mode. VOL SEL 1 PUSH START → Volume → Bass → Treble ↑ ↓ Fader ← Balance

(1: Shorted by the diode; 0: Open)

www.DataSheet4U.com

<table>
<tr><th>Momentary key</th><th>Description</th></tr>
<tr><td>VOL UP</td><td>The VOL UP key is used to adjust the volume of sound in each electronic volume control mode. The operation depends on the state of the VKYSEL initial setting diode.
<table>
<tr><th>VKYSEL</th><th>Description</th></tr>
<tr><td>0</td><td>Pressing the VOL UP key in a mode other than an electronic volume control mode selects volume mode and increases the volume of sound.
In an electronic volume control mode selected by the VOL SEL key, pressing the VOL UP key activates the operation corresponding to the selected mode as follows:
<table>
<tr><th>Mode</th><th>Function</th></tr>
<tr><td>Volume</td><td>Increases the main sound volume.</td></tr>
<tr><td>Bass</td><td>Increases the bass.</td></tr>
<tr><td>Treble</td><td>Increases the treble.</td></tr>
<tr><td>Balance</td><td>Emphasizes the sound volume from the right-side speaker.</td></tr>
<tr><td>Fader</td><td>Emphasizes the sound volume from the front speaker.</td></tr>
</table>
Keeping the VOL UP key pressed for at least 0.5 seconds controls the volume continuously.
If no key is pressed for at least 3 seconds, the mode previous to the current electronic volume control mode is reselected.</td></tr>
<tr><td>1</td><td>The VOL UP key is ineffective. After an electronic volume control mode is selected using the VOL SEL key, the MAN UP key can be used to perform the same adjustment that would be performed using the VOL UP key.
Pressing the MAN UP key in a mode other than an electronic volume control mode does not select volume mode. See the descriptions of the MAN UP and MAN DWN keys for details.</td></tr>
</table>
(1: Shorted by the diode; 0: Open)</td></tr>
</table>

www.DataSheet4U.com

3. ALARM FUNCTION

www.DataSheet4U.com

The alarm function is provided as a means of preventing car theft. If the alarm system detects anyone other than the user entering the car, a warning sound is generated.

3.1 Overview of the Alarm Function

- **When alarm mode is off**

- **When alarm mode is on**

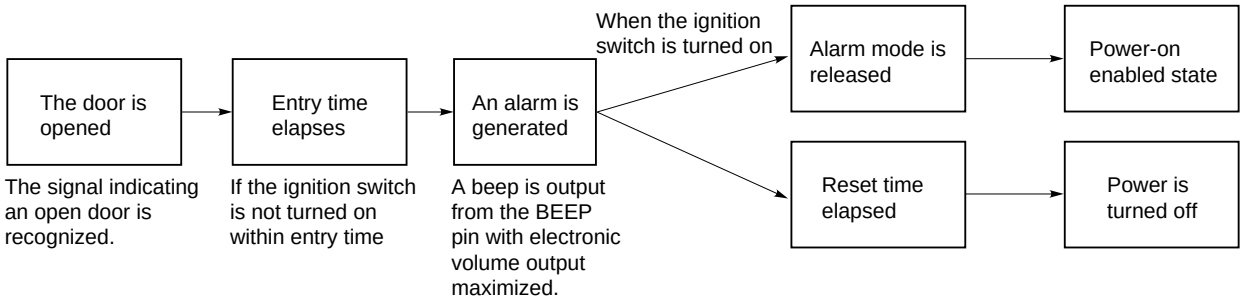

www.DataSheet4U.com

3.2 Setting Alarm Mode

Alarm mode is set as follows:

www.DataSheet4U.com

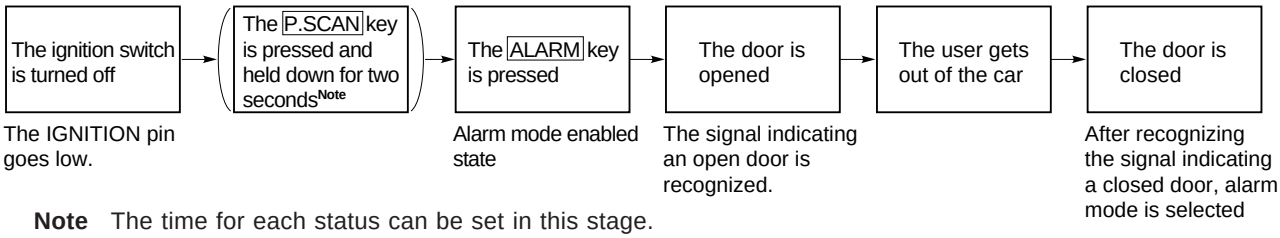

Note The time for each status can be set in this stage.
Press and hold down the P.SCAN key for two seconds. Then each time the key is pressed, the status changes in the order of the exit time, entry time, reset time, and setting end.

	Initial value (s)	Specificate value (s)
Exit time	12	3 to 180
Entry time	12	3 to 180
Reset time	30	3 to 180

Exit time : Time between opening and closing the door after pressing the ALARM key
Entry time : Time between opening the door and turning on the ignition switch
Reset time : Time during which an alarm sound is generated in alarm mode

To set alarm mode, the following pins and keys in (1) to (7) are used.

(1) IGNITION pin

The ignition switch signal is input from the key box.

IGNITION pin	State
At the low level	• Power-off • Alarm mode on (alarm being output) and alarm mode time setting enabled • In alarm mode
At the high level	Power-on enabled state

www.DataSheet4U.com

(2) ALARMIN pin

The signal indicating that the car door is open or closed is input.

www.DataSheet4U.com

- When the ALARM key has been turned on with the ALARMIN pin at the low level

ALARMIN pin	State
At the low level	The door is closed.
At the high level	The door is open.

- When the ALARM key has been turned on with the ALARMIN pin at the high level

ALARMIN pin	State
At the low level	The door is open.
At the high level	The door is closed.

(3) ALARMOUT pin

The state upon warning is output.

This pin is used as a power-on signal for the peripheral hardware, such as an electronic volume control or amplifier.

ALARMIN pin	State
At the low level	Alarm mode off
At the high level	Alarm mode on (alarm being output)

(4) ALARM key

When this key is pressed with both of the following conditions satisfied, the alarm function is activated.

- The ignition switch is off.
- The DISALARM initial setting diode is set to 0.

The ALARM key is effective only when the IGNITION pin = 0.

(5) P.SCAN key

When this key is pressed and held down for two seconds or more with both of the following conditions satisfied, the system enters the alarm time setting state.

- The ignition switch is off.
- The DISALARM initial setting diode is set to 0.

(6) MAN UP key

When this key is pressed in the alarm time setting state, the set time is incremented by one step (one second). When this key is pressed and held down for two seconds or more, the set time is incremented continuously at a rate of one step per 50 ms.

(7) MAN DWN key

When this key is pressed in the alarm time setting state, the set time is decremented by one step (one second). When this key is pressed and held down for two seconds or more, the set time is decremented continuously at a rate of one step per 50 ms.

Figure 3-1 outlines the setting and operation of alarm mode. Figures 3-2 to 3-4 show the transition of the alarm operations.

www.DataSheet4U.com

Figure 3-1. Outline of Setting and Operation of Alarm Mode

www.DataSheet4U.com

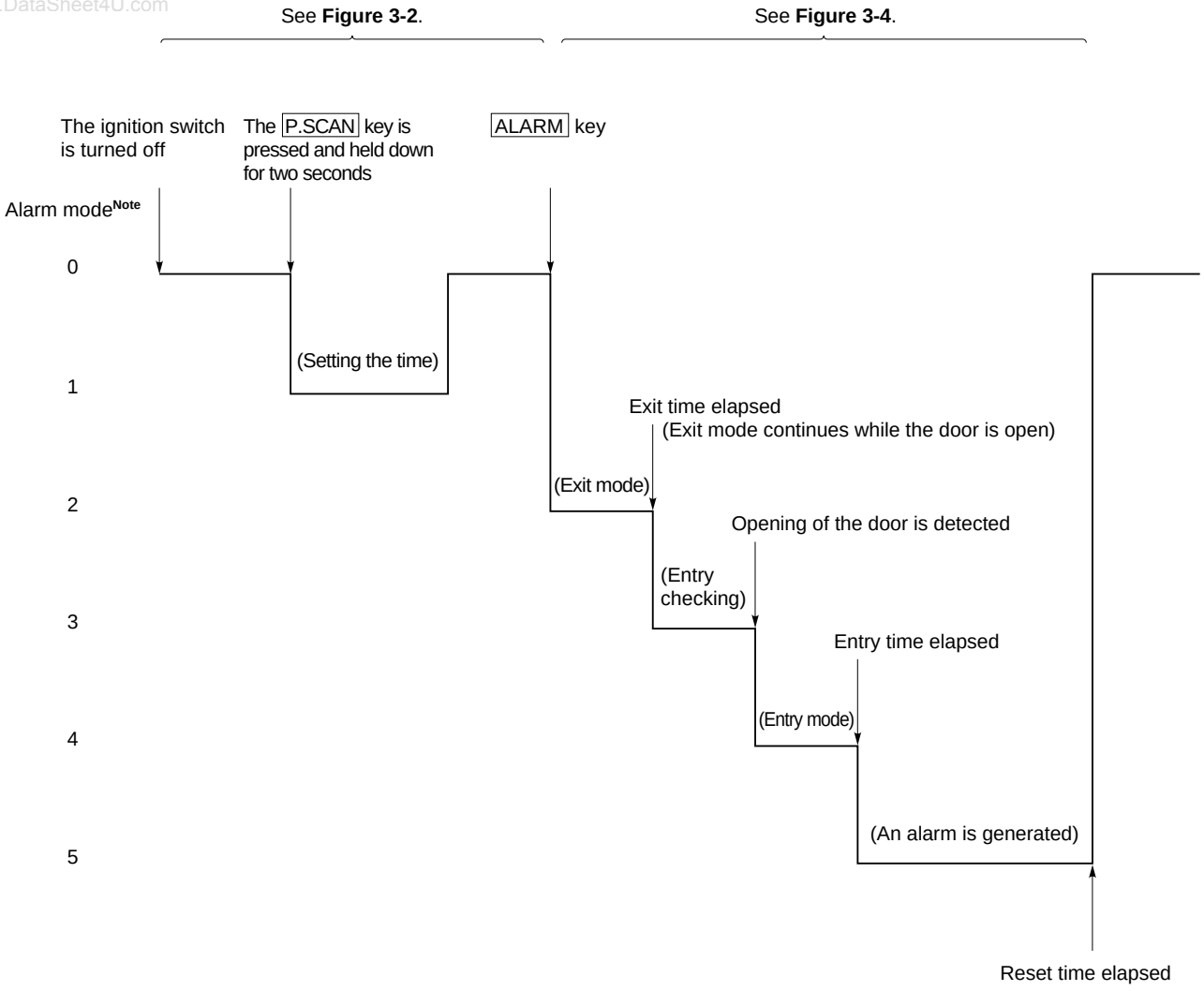

Note 0: Alarm operation being halted
1: During alarm time setting (setting of the time for exit, entry, and reset)
2: During exit operation
3: During entry checking
4: During entry operation
5: Alarm being generated

www.DataSheet4U.com

Figure 3-2. Transition of Alarm Operations 1 (While Alarm Operation Is Halted)

www.DataSheet4U.com

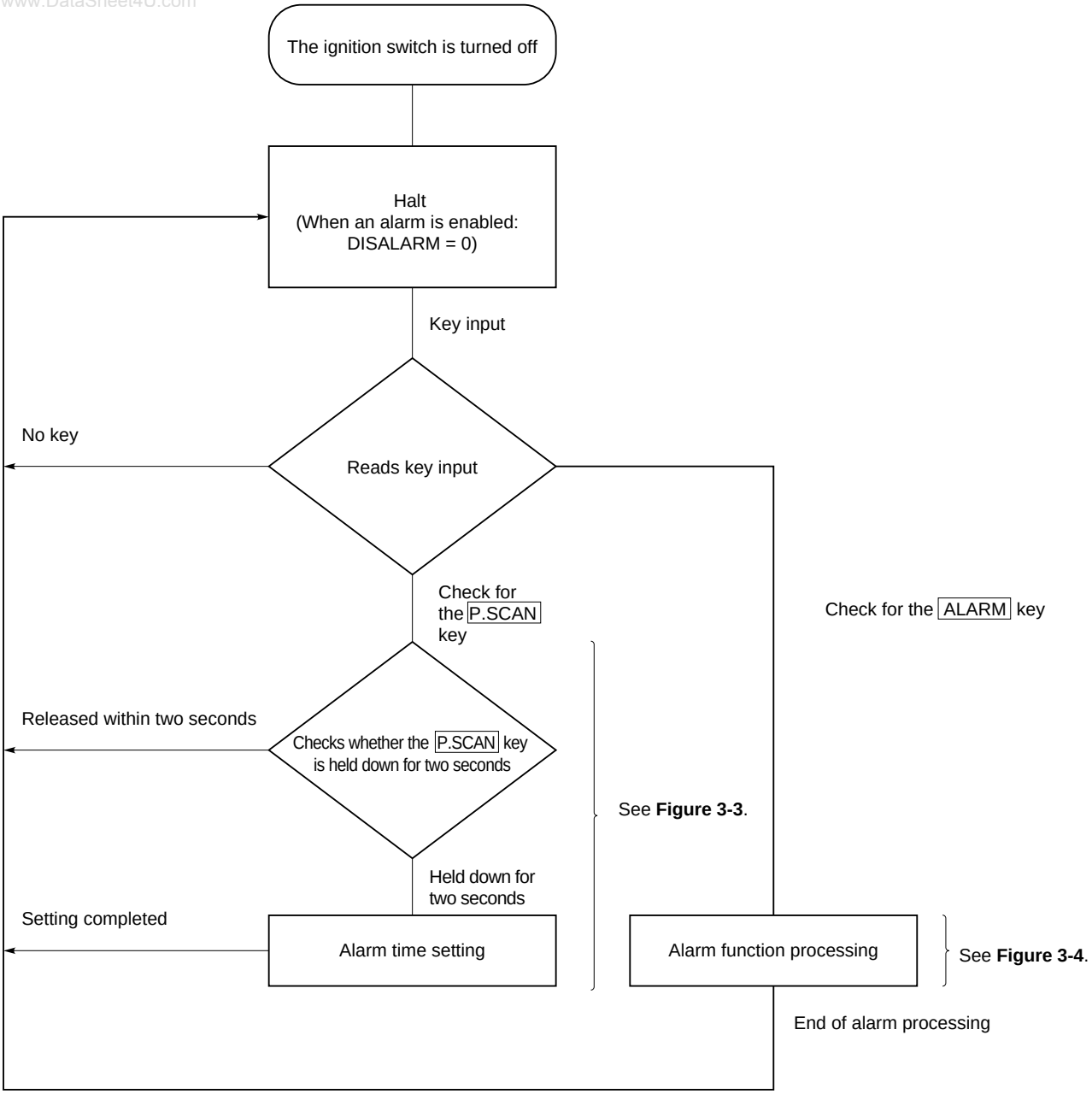

www.DataSheet4U.com

Figure 3-3. Transition of Alarm Operations 2 (Alarm Time Setting)

www.DataSheet4U.com

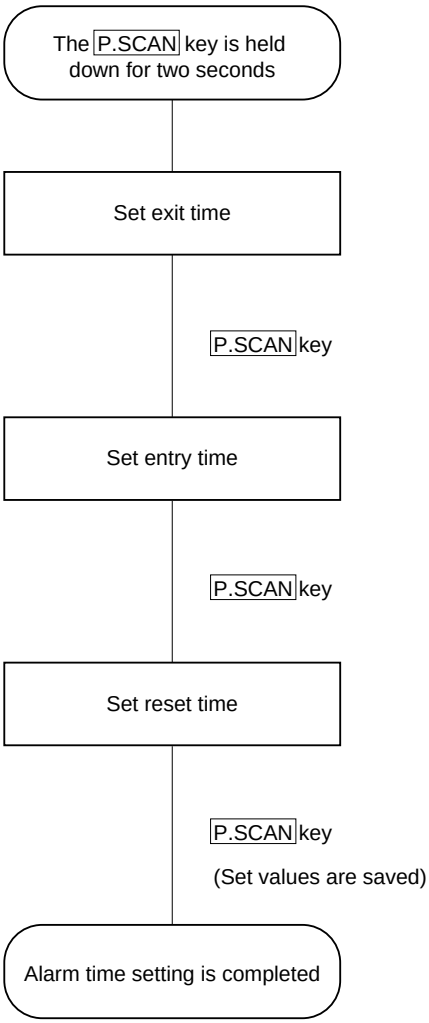

	Initial value (s)	Specifiable value (s)
Exit time	12	3 to 180
Entry time	12	3 to 180
Reset time	30	3 to 180

www.DataSheet4U.com

Figure 3-4. Transition of Alarm Operations 3 (During Alarm Function Processing)

www.DataSheet4U.com

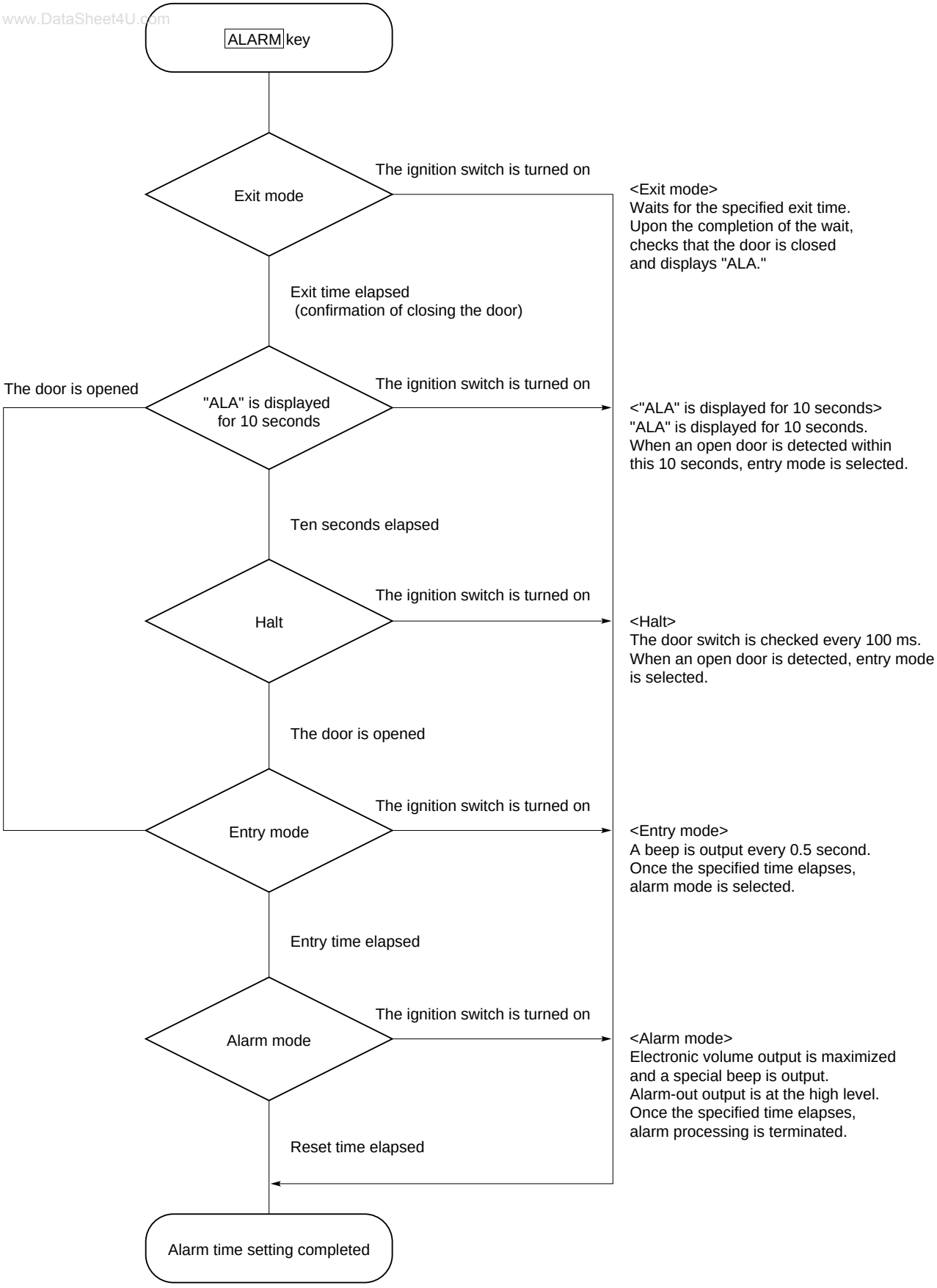

www.DataSheet4U.com

4. MODE TRANSITION

www.DataSheet4U.com

The radio set is turned on or off by switching the RDSET switch.

The RDSET, TPSET, and CDSET switches are enabled only when the CE and IGNITION pins are high.

When the IGNITION pin is made low, clock display is not provided regardless of state of the initial setting diode NOCLK. However, when NOCLK = 0 (for using the clock), the clock operates.

Transition to alarm mode is possible when the IGNITION pin is at a low level.

The CE pin must be fixed to a high level.

(1) Mode transition when the IGNITION pin is raised from low to high

The RDSET switch is used to turn on or off radio mode.

The TPSET and CDSET switches are used to switch to tape mode and CD mode.

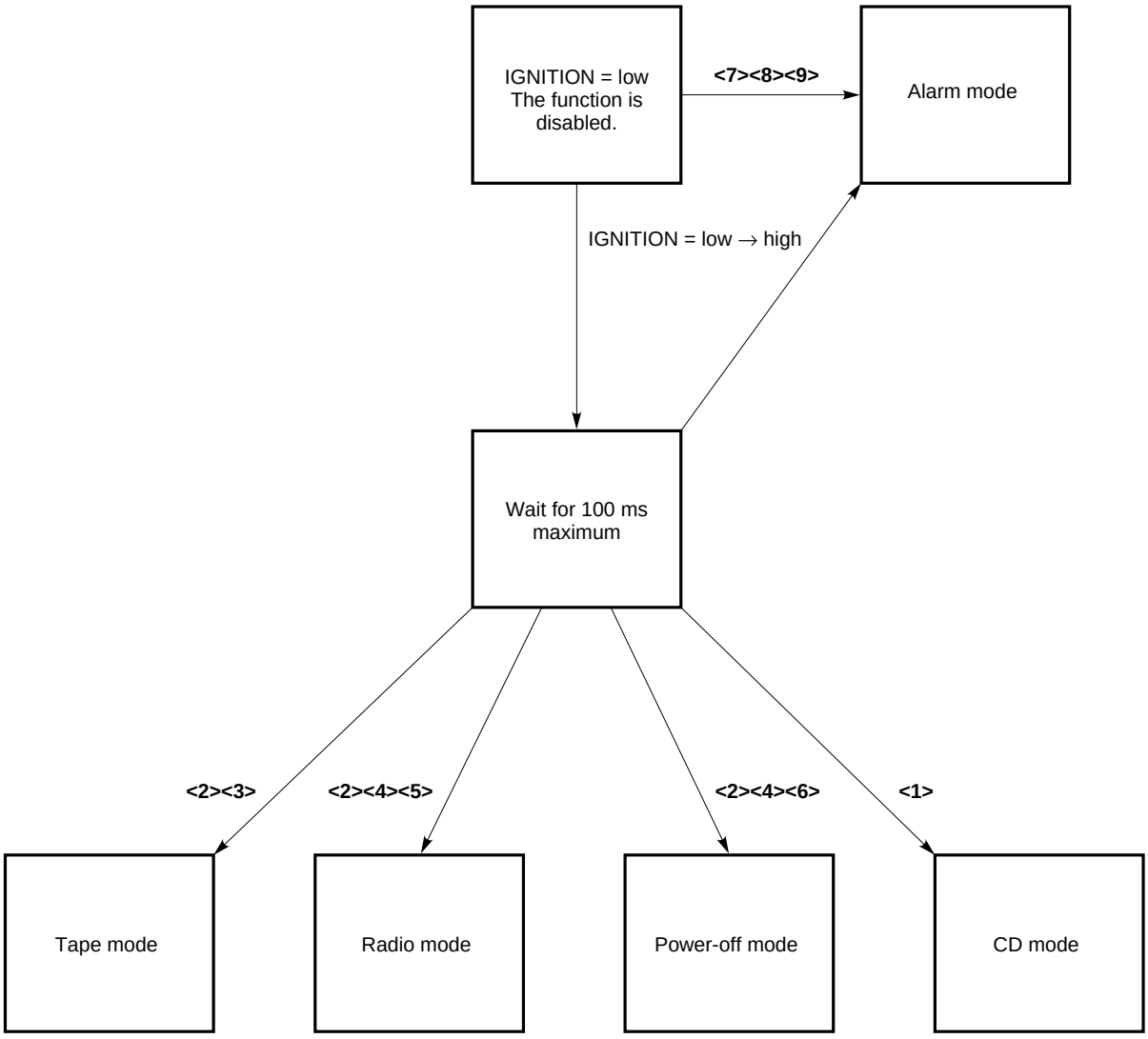

Remark The numbers in brackets (< >) represent the following:

- **<1>**: CDSET switch on
- **<2>**: CDSET switch off
- **<3>**: TPSET switch on
- **<4>**: TPSET switch off
- **<5>**: RDSET switch on
- **<6>**: RDSET switch off
- **<7>**: IGNITION pin off (low level)
- **<8>**: [ALARM] key on
- **<9>**: DISALARM switch = 0

www.DataSheet4U.com

(2) Mode transition when the IGNITION pin is held high

www.DataSheet4U.com

(a) Transition from radio mode to another mode

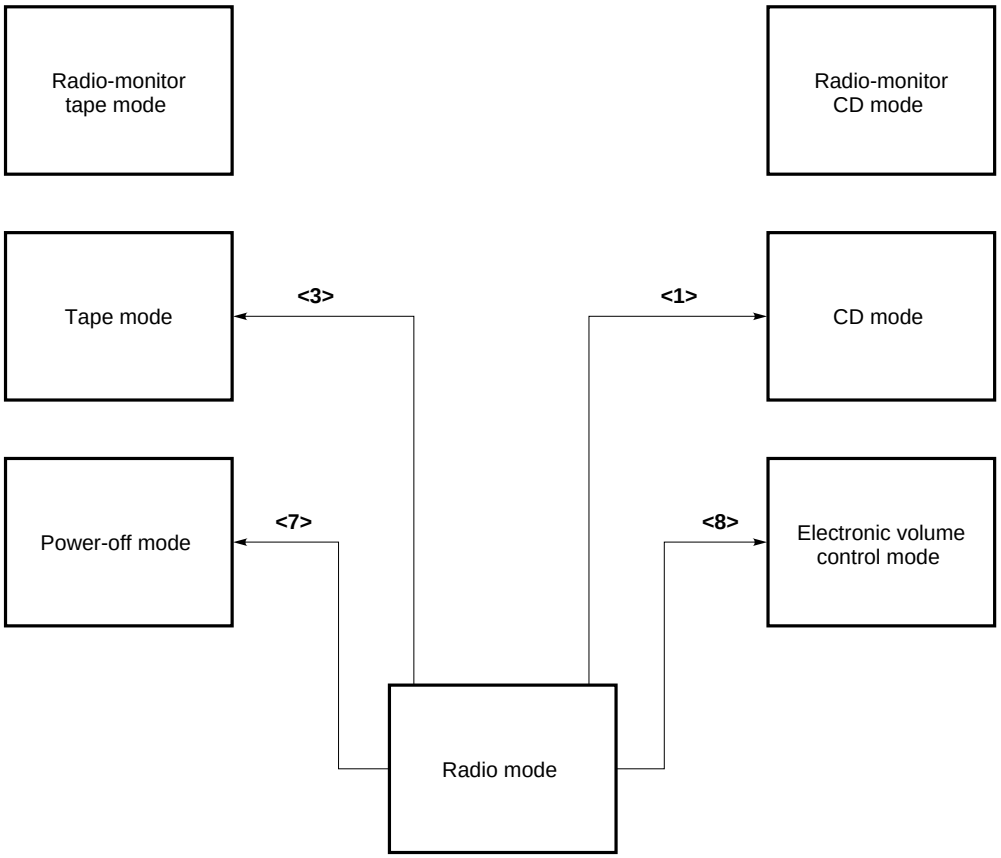

Remark The numbers in brackets (< >) represent the following:

<1>: CDSET switch on
<2>: CDSET switch off
<3>: TPSET switch on
<4>: TPSET switch off
<5>: RDMONI key on
<6>: RDSET switch on
<7>: RDSET switch off
<8>: Electronic volume control key on

www.DataSheet4U.com

(b) Transition from tape mode to another mode

www.DataSheet4U.com

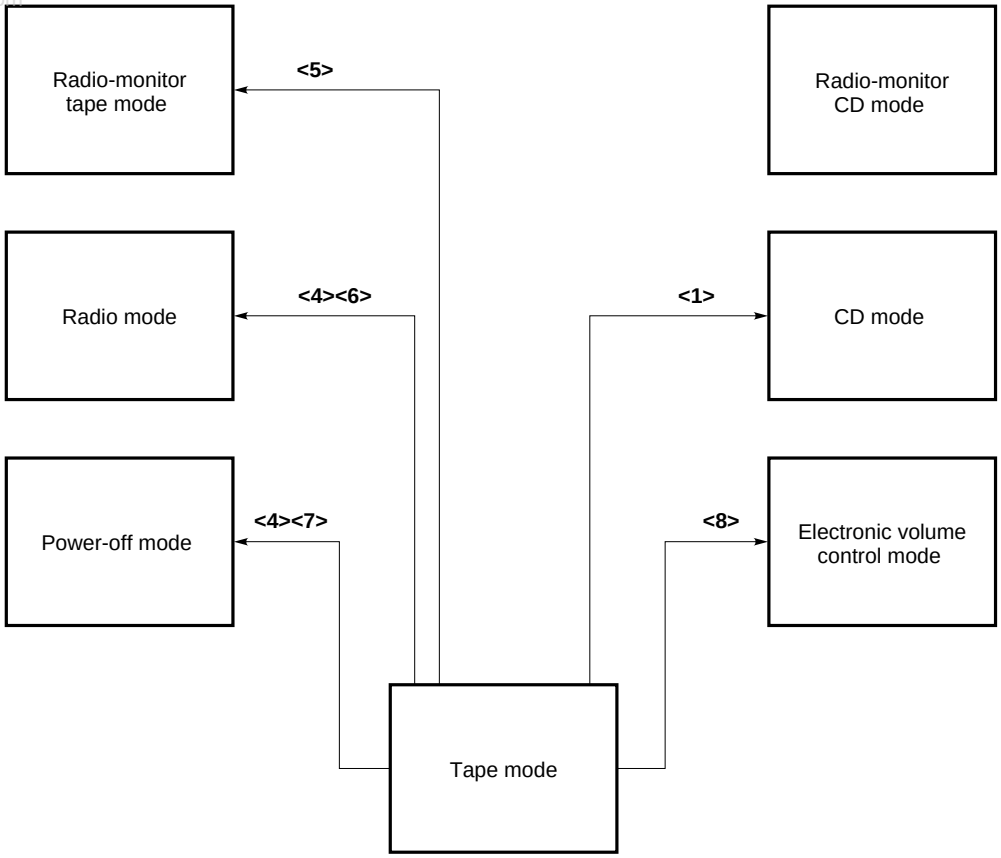

Remark The numbers in brackets (< >) represent the following:

<1>: CDSET switch on
<2>: CDSET switch off
<3>: TPSET switch on
<4>: TPSET switch off
<5>: RDMONI key on
<6>: RDSET switch on
<7>: RDSET switch off
<8>: Electronic volume control key on

www.DataSheet4U.com

(c) Transition from radio-monitor tape mode to another mode

www.DataSheet4U.com

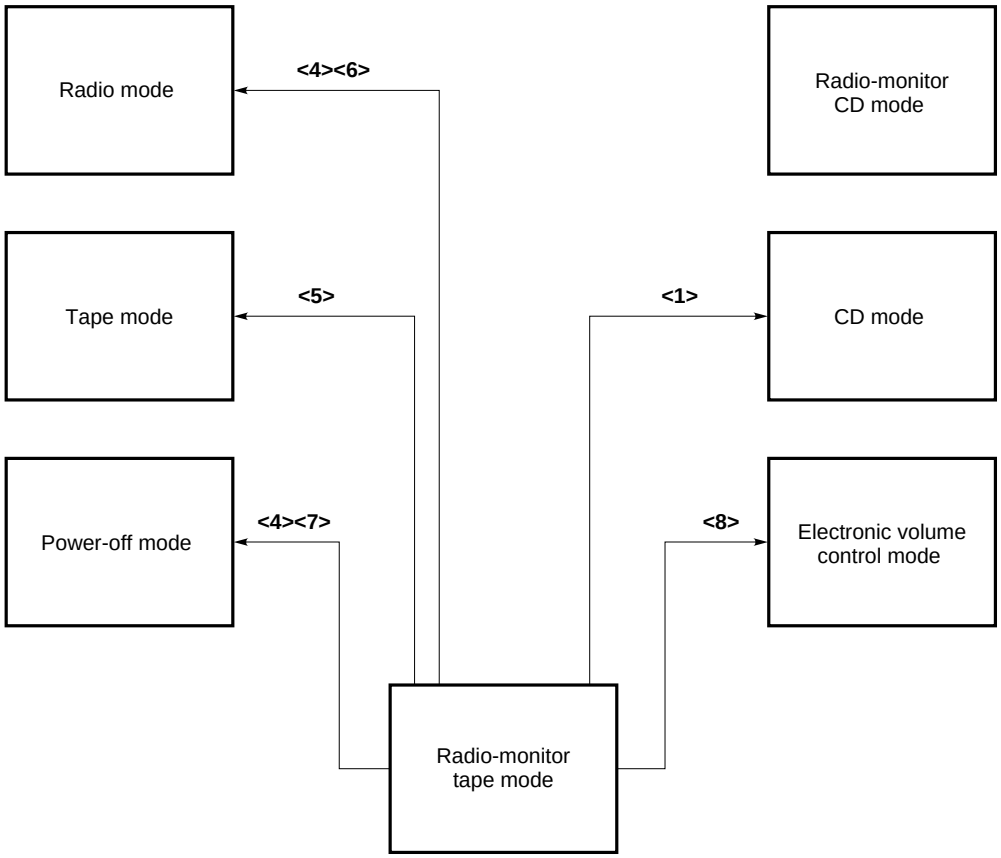

Remark The numbers in brackets (< >) represent the following:

<1>: CDSET switch on
<2>: CDSET switch off
<3>: TPSET switch on
<4>: TPSET switch off
<5>: RDMONI key on
<6>: RDSET switch on
<7>: RDSET switch off
<8>: Electronic volume control key on

www.DataSheet4U.com

(d) Transition from CD mode to another mode

www.DataSheet4U.com

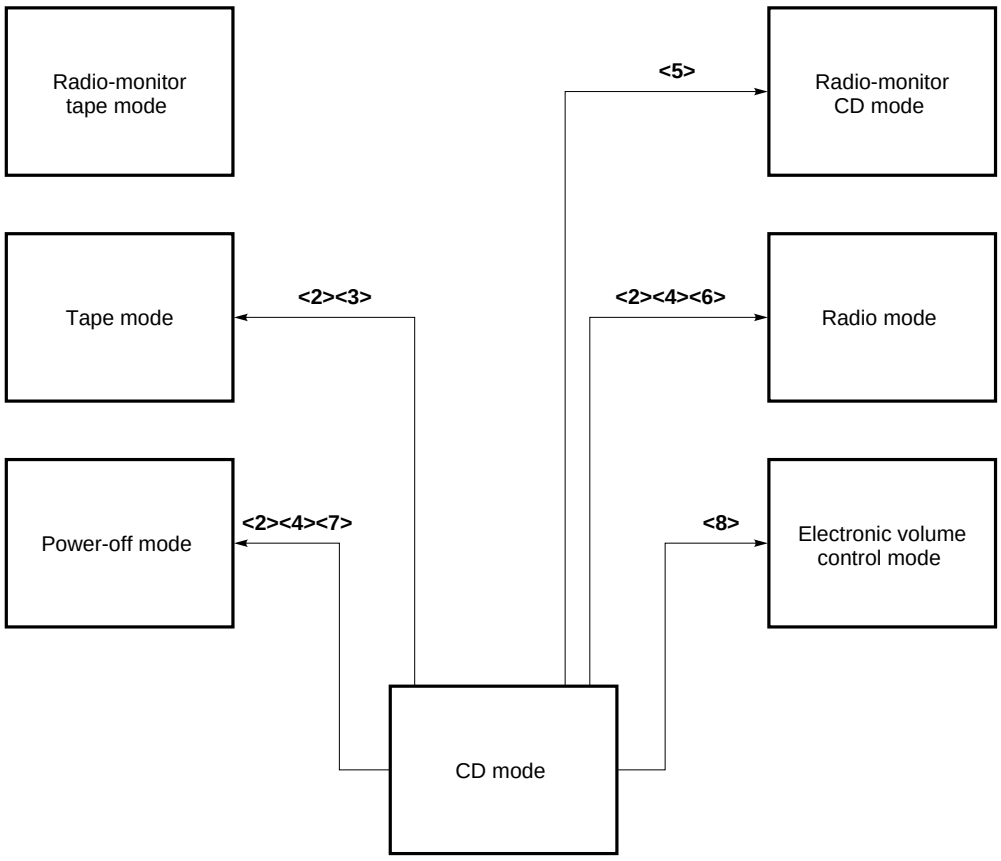

Remark The numbers in brackets (< >) represent the following:

<1>: CDSET switch on
<2>: CDSET switch off
<3>: TPSET switch on
<4>: TPSET switch off
<5>: RDMONI key on
<6>: RDSET switch on
<7>: RDSET switch off
<8>: Electronic volume control key on

www.DataSheet4U.com

(e) Transition from radio-monitor CD mode to another mode

www.DataSheet4U.com

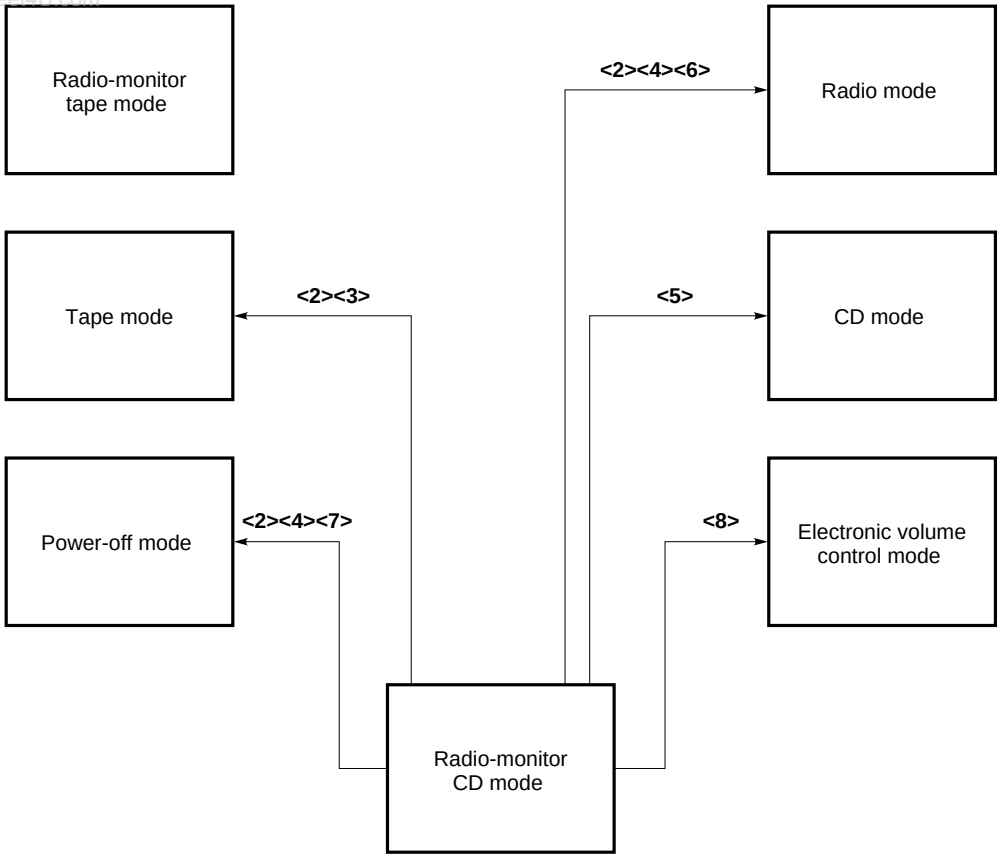

Remark The numbers in brackets (< >) represent the following:

<1>: CDSET switch on
<2>: CDSET switch off
<3>: TPSET switch on
<4>: TPSET switch off
<5>: RDMONI key on
<6>: RDSET switch on
<7>: RDSET switch off
<8>: Electronic volume control key on

www.DataSheet4U.com

(f) Transition from power-off mode to another mode

www.DataSheet4U.com

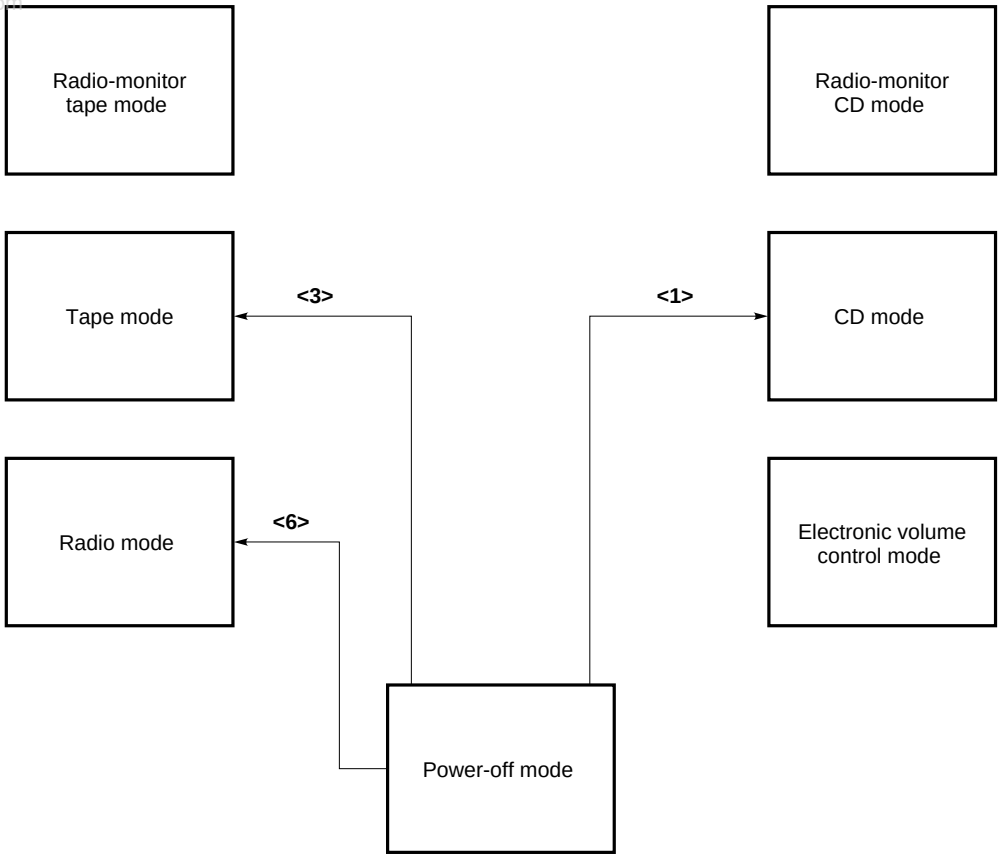

Remark The numbers in brackets (< >) represent the following:

<1>: CDSET switch on
<2>: CDSET switch off
<3>: TPSET switch on
<4>: TPSET switch off
<5>: RDMONI key on
<6>: RDSET switch on
<7>: RDSET switch off
<8>: Electronic volume control key on

www.DataSheet4U.com

5. DISPLAY

www.DataSheet4U.com

5.1 LCD Panel

5.2 Character Style

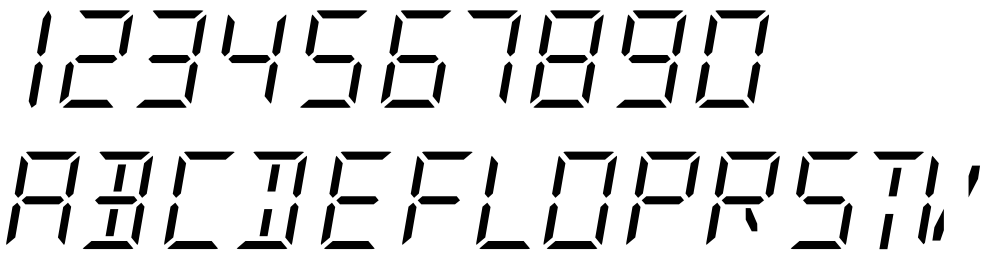

5.3 Examples of Display

(1) Tape mode

(2) CD mode

(3) Auto-storage

(4) Volume mode

(5) Bass mode

(6) Treble mode

(7) Balance mode

(8) Fader mode

www.DataSheet4U.com

5.4 LCD Assignment

www.DataSheet4U.com

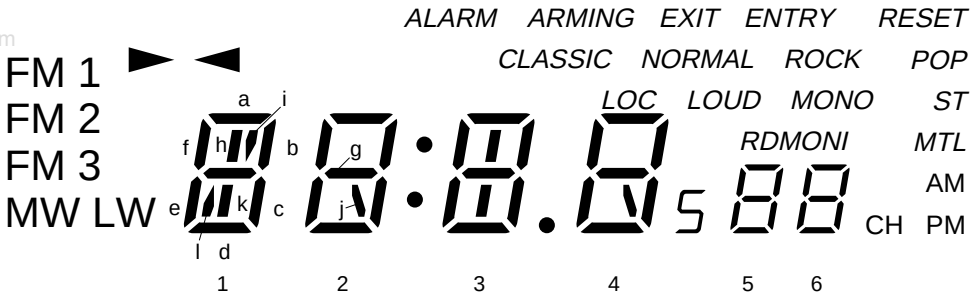

5.5 Pin Assignment of the LCD Controller/Driver (μPD7225)

Pin name (pin number) / Pin name (pin number)	COM0 (15)	COM1 (16)	COM2 (17)
S0 (19)	ST	MW	FM1
S1 (20)	◀	LW	▶
S2 (21)	POP	FM3	FM2
S3 (22)	1l, i	1d	1f
S4 (23)	1g	1e	1a
S5 (24)	1k, h	1c	1b
S6 (25)	ALARM	2e	2f
S7 (26)	2g	2d	2a
S8 (27)	2j	2c	2b
S9 (28)	:	3e	3f
S10 (29)	3g	3d	3a
S11 (30)	3h, k	3c	3b
S12 (31)	.	4e	4f
S13 (32)	4g	4d	4a
S14 (34)	4j	4c	4b
S15 (35)	AM	PM	MONO
S16 (36)	ARMING	5e	5f
S17 (37)	5g	5d	5a
S18 (38)	EXIT	5c	5b
S19 (39)	ENTRY	6e	6f
S20 (40)	6g	6d	6a
S21 (41)	RESET	6c	6b
S22 (42)	RDMONI	CH	MTL
S23 (43)	5	NORMAL	LOUD
S24 (44)	ROCK	CLASSIC	LOC

Remark The numbers in parentheses indicate the pin numbers of the μPD7225G (52-pin plastic QFP).

www.DataSheet4U.com

5.6 Description of Display

www.DataSheet4U.com

Display	Description
ALARM ARMING EXIT ENTRY RESET	Indicates the state of the alarm operation. • ALARM : This indication is on in alarm mode. • ARMING : This indication is on during alarm output. • EXIT : This indication is on during exit time setting. • ENTRY : This indication is on during entry time setting. • RESET : This indication is on during reset time setting.
CLASSIC NORMAL POP ROCK	Indicates the mode for the external sound control IC. • CLASSIC: Classic mode • NORMAL: Normal mode • POP : Pops mode • ROCK : Rock mode
ST	Indicates that a stereo broadcast is currently received. **(1) In CD mode or tape mode** This indication is off. **(2) In other modes** This indication is on when the FM or MW band is selected, the ST switch is on in the station reception state, and the MONO-off state is set. (For the MW band, this indication is on only when the initial setting diode MWS = 1, and the stereo reception function is enabled.) This indication is off during tuning operation regardless of which band is selected.
LOC	Indicates that the local state is set. **(1) In CD mode and tape mode** This indication is off. **(2) In other modes** This indication is on in the local state.
LOUD	Indicates that the loudness-on state is set. This indication is on in the loudness-on state, regardless of which mode is set.
MTL	Indicates that the METAL-on state is set. **(1) In tape mode and radio-monitor tape mode** This indication is on in the METAL-on state. **(2) In other modes** This indication is off.
RDMONI	Indicates that the radio-monitor state is set.
MONO	Indicates that the MONO state is set. **(1) In CD mode and tape mode** This indication is off. **(2) In other modes** This indication is on when the FM or MW band is selected in the MONO-off state. (For the MW band, this indication is on only when the initial setting diode MWS = 1, and the stereo reception function is enabled.)
▶ ◀	Indicates a tape running direction. **(1) In tape mode and radio-monitor tape mode** A tape running direction is displayed according to the state of the RL switch. A tape running direction blinks when the FF switch is on. **(2) In other modes** This indication is off.

www.DataSheet4U.com

www.DataSheet4U.com

Display	Description
FM1 FM2 FM3 MW LW	Indicates a band received. **(1) In CD mode and tape mode** This indication is off. **(2) In other modes** The band currently received is displayed.
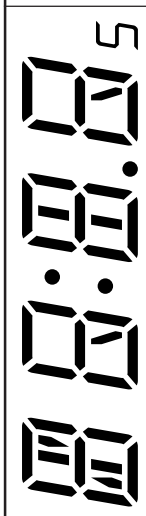	Displays a receive frequency, "ATP", "CD", "TAPE", "VOL", "BAS", "TRE", "BA", "FA", and the clock. When the entire panel is blinking while "VOL" is displayed, the mute state is set.
AM PM	Indicates AM (before noon) or PM (after noon) when the 12-hour system is used for display.
	Indicates a preset memory number or electronic volume control value. When a preset memory is written to or called, the preset memory number is displayed together with "CH." In a electronic volume control mode, the value of the volume control is displayed; the "CH" is turned off in this case. This indication is on when a frequency is displayed; this indication is off when the clock is displayed. When preset memory write operation is enabled, "CH" blinks at a frequency of 1 Hz. When a preset memory is being scanned, the preset memory number blinks at a frequency of 1 Hz.

www.DataSheet4U.com

6. REMOTE CONTROL FUNCTION

www.DataSheet4U.com

Use the μPD6121G for sending signals from a remote-controller. The μPD6121G incorporates a custom code. If this code is not correctly set, the μPD17012GF-058 cannot be controlled using the remote controller.

The custom code which operates the μPD17012GF-058 is 8604H. Set the code to 8604H by connecting a diode and a pull-up resistor appropriately on the key matrix of the μPD6121G. (See **Section 6.4**.)

6.1 Remote-Controller Key Placement (When the μPD6121G Is Used)

Input pin (pin number) / Output pin (pin number)	KI_0 (1)	KI_1 (2)	KI_2 (3)	KI_3 (4)
KI/O_0 (19)	M1	M2	M3	M4
KI/O_1 (18)	M5	M6	SEEK UP	-
KI/O_2 (17)	SCAN UP	SCAN DWN	P. SCAN	BAND
KI/O_3 (16)	MODE	LOC	MONO	POWER
KI/O_4 (15)	ILLUMINATION	LOUD	-	-
KI/O_5 (14)	DISP	MAN UP	MAN DWN	-
KI/O_6 (13)	-	-	MTL	VOL CON
KI/O_7 (12)	VOL UP	VOL DWN	MUTE	CD

www.DataSheet4U.com

6.2 Remote-Controller Keys

The remote-controller keys operate in the same way as the momentary keys of the μPD17012GF-058.

www.DataSheet4U.com

6.3 Remote-Controller Data Codes

- **When each key is pressed independently**

Remote-controller key	Data code							
	D0	D1	D2	D3	D4	D5	D6	D7
M1	0	0	0	0	0	0	0	0
M2	1	0	0	0	0	0	0	0
M3	0	1	0	0	0	0	0	0
M4	1	1	0	0	0	0	0	0
M5	0	0	1	0	0	0	0	0
M6	1	0	1	0	0	0	0	0
SEEK UP	0	1	1	0	0	0	0	0
-	1	1	1	0	0	0	0	0
SCAN UP	0	0	0	1	0	0	0	0
SCAN DWN	1	0	0	1	0	0	0	0
P. SCAN	0	1	0	1	0	0	0	0
BAND	1	1	0	1	0	0	0	0
MODE	0	0	1	1	0	0	0	0
LOC	1	0	1	1	0	0	0	0
MONO	0	1	1	1	0	0	0	0
POWER	1	1	1	1	0	0	0	0

Remote-controller key	Data code							
	D0	D1	D2	D3	D4	D5	D6	D7
ILLUMINATION	0	0	0	0	1	0	0	0
LOUD	1	0	0	0	1	0	0	0
-	0	1	0	0	1	0	0	0
-	1	1	0	0	1	0	0	0
DISP	0	0	1	0	1	0	0	0
MAN UP	1	0	1	0	1	0	0	0
MAN DWN	0	1	1	0	1	0	0	0
-	1	1	1	0	1	0	0	0
-	0	0	0	1	1	0	0	0
-	1	0	0	1	1	0	0	0
MTL	0	1	0	1	1	0	0	0
VOL CON	1	1	0	1	1	0	0	0
VOL UP	0	0	1	1	1	0	0	0
VOL DWN	1	0	1	1	1	0	0	0
MUTE	0	1	1	1	1	0	0	0
CD	1	1	1	1	1	0	0	0

- **When two keys are pressed simultaneously**

Remote-controller key	Data code							
	D0	D1	D2	D3	D4	D5	D6	D7
DISP + MAN UP	1	0	1	0	1	1	0	0
DISP + MAN DWN	0	1	1	0	1	1	0	0

www.DataSheet4U.com

www.DataShee

6.4 Example of a Remote-Controller Circuit Using the μPD6121G-001

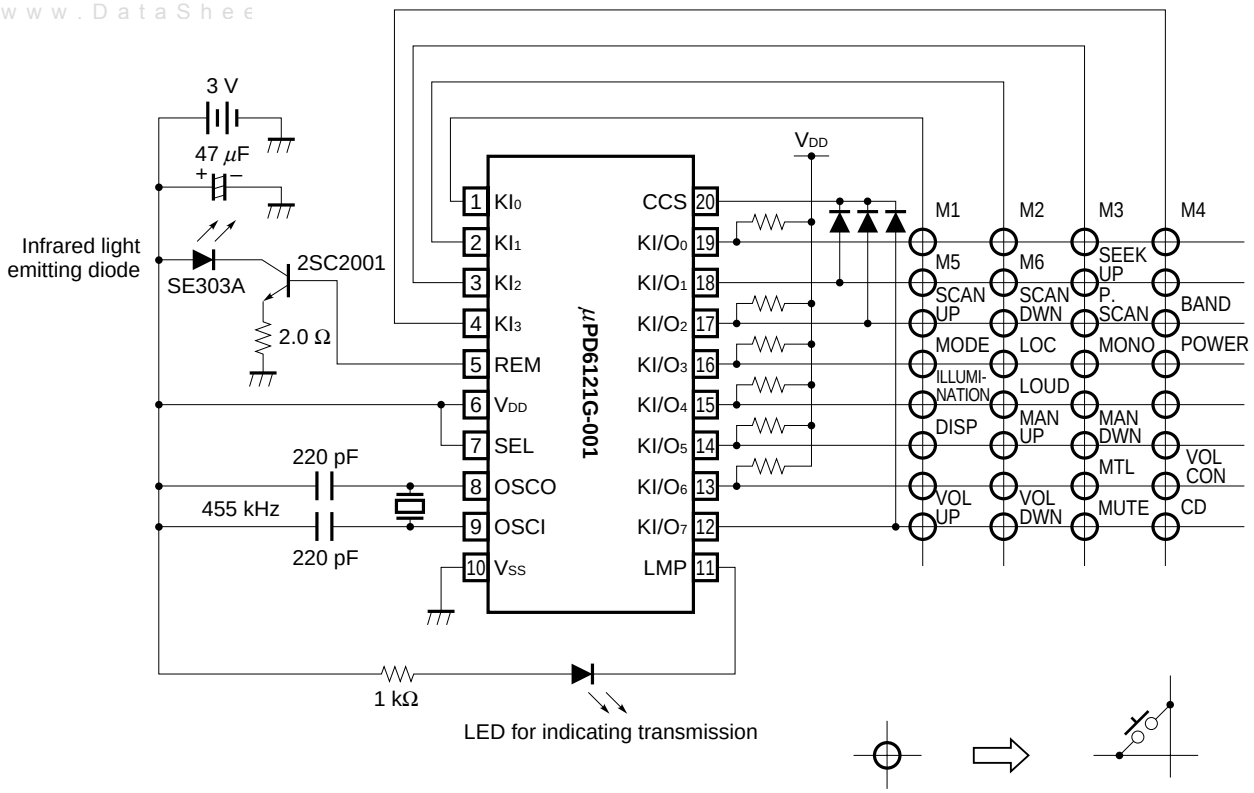

6.5 Example of a Remote-Controller Preamplifier Circuit Using the μPC2800HA

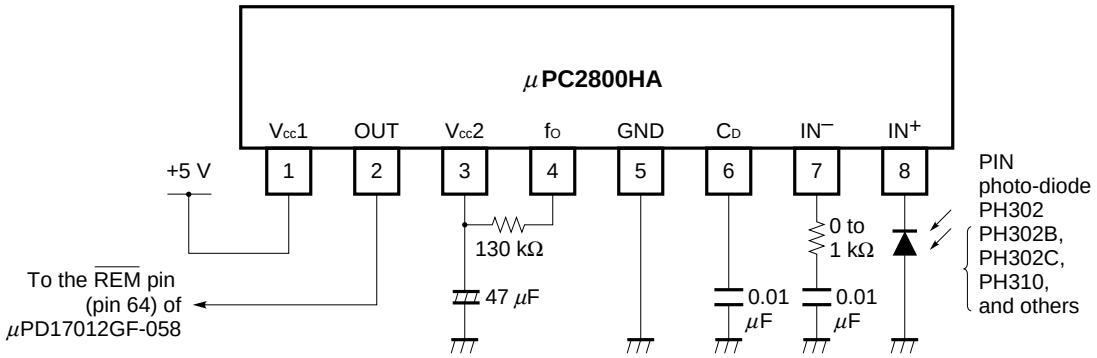

www.DataSheet4U.com

7. MUTE OUTPUT TIMING CHARTS

www.DataSheet4U.com

The numbers **<1>** through **<6>** in this chapter represent the following:

<1>: Key-on chattering protection
<2>: Preceding mute and beep output
<3>: Updating of the frequency division ratio setting and indication
<4>: Following mute
<5>: Scan time
<6>: Wait for PLL locking

7.1 Radio Mute ($\overline{\text{RDMUTE}}$ Pin) Output Timing Charts

(1) Manual up/down

(a) 1-channel up/down

(i) When AUTO500 switch = 0

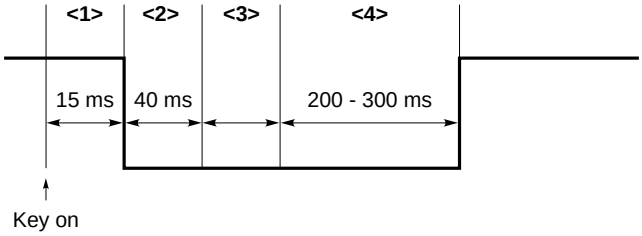

(ii) When AUTO500 switch = 1

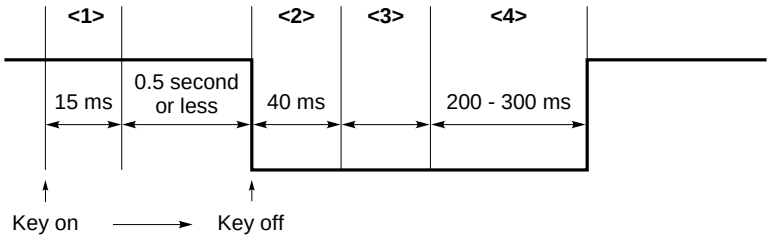

In either case (i) or case (ii), the time of **<4>** is 600 ms to 700 ms at the band edges (lowest frequency ⇄ highest frequency).

www.DataSheet4U.com

(b) Continuous up/down

www.DataSheet4U.com

(i) When AUTO500 switch = 0

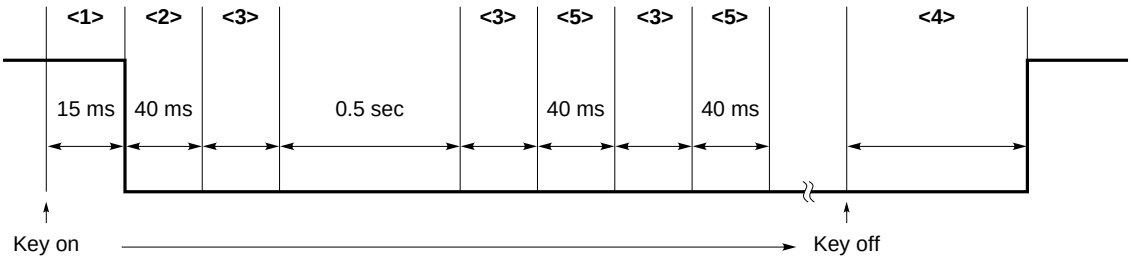

At the band edges, the time of **<5>** is 500 ms, and the time of **<4>** is 600 ms to 700 ms.

(ii) When AUTO500 switch = 1

The auto-tuning function is enabled by holding down the key for 0.5 second or more, so that continuous up/down operation is not performed.

(2) Automatic up/down

(a) SEEK UP, SCAN UP, or SCAN DWN key

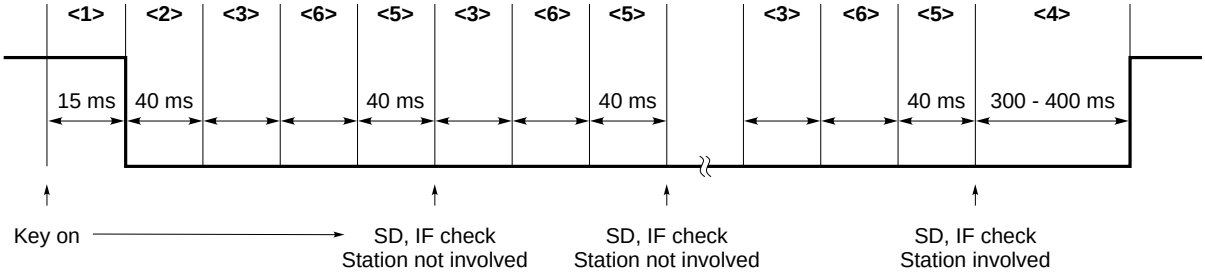

(b) When the MAN UP key is held down for 0.5 second or more when AUTO500 switch = 1

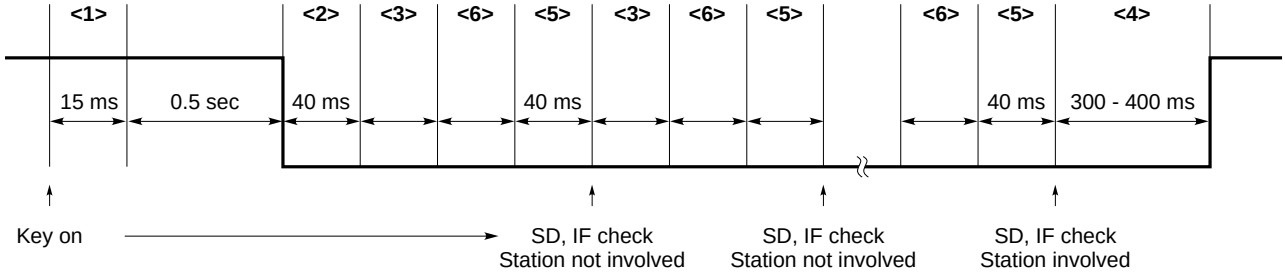

In either case (a) or case (b), the time of **<5>** is 540 ms at the band edges.

An IF check is made twice in the FAST mode and SLOW mode.

www.DataSheet4U.com

(3) Calling a preset memory

www.DataSheet4U.com

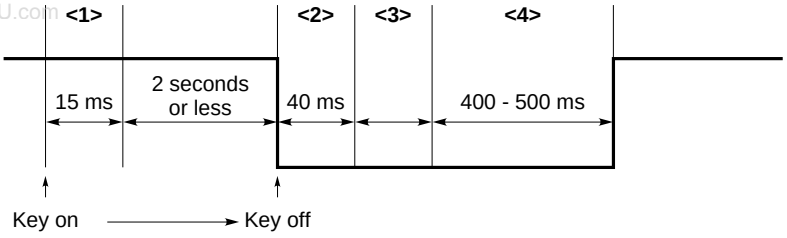

(4) Write to a preset memory

Mute output operation is not performed.

(5) Band switching

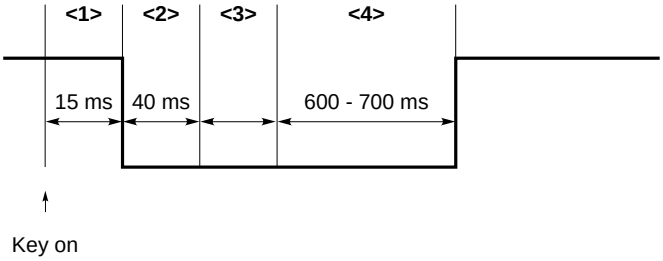

(6) Turning on or off the radio set

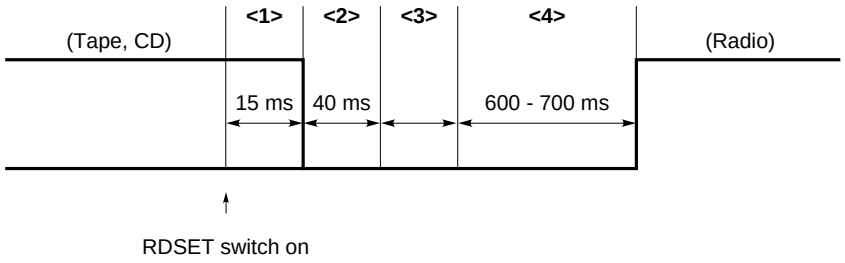

(7) Turning on or off the tape or CD

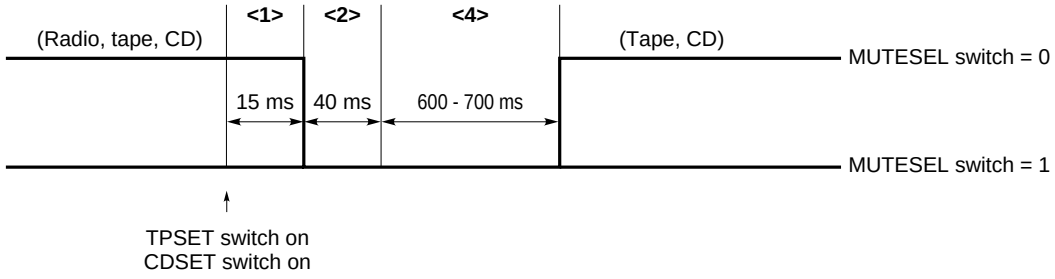

www.DataSheet4U.com

(8) Pulling the CE pin from high to low

www.DataSheet4U.com

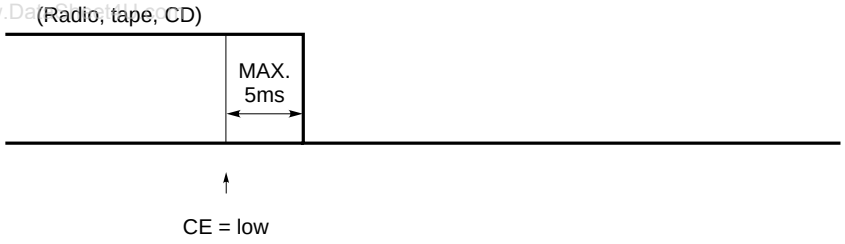

Caution When using alarm mode, always pull up the CE pin.

7.2 Radio Mute ($\overline{\text{RDMUTE}}$ Pin) and Audio Mute ($\overline{\text{AMUTE}}$ Pin) Output Timing Charts

(1) When the mode is switched from radio mode to tape or CD mode

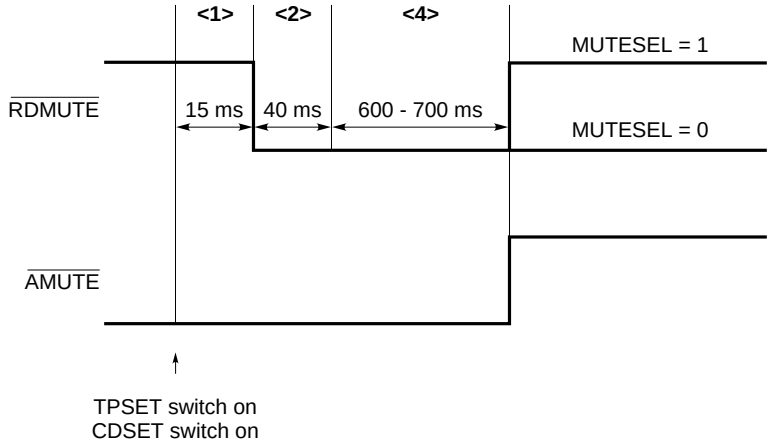

(2) When the radio monitor function is used (Set MUTESEL to 0.)

(a) Switching the radio monitor function from off to on

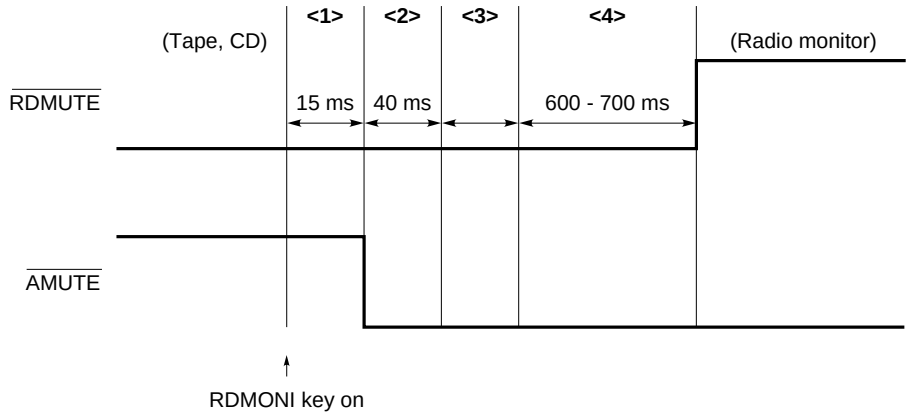

www.DataSheet4U.com

(b) Switching the radio monitor function from on to off

www.DataSheet4U.com

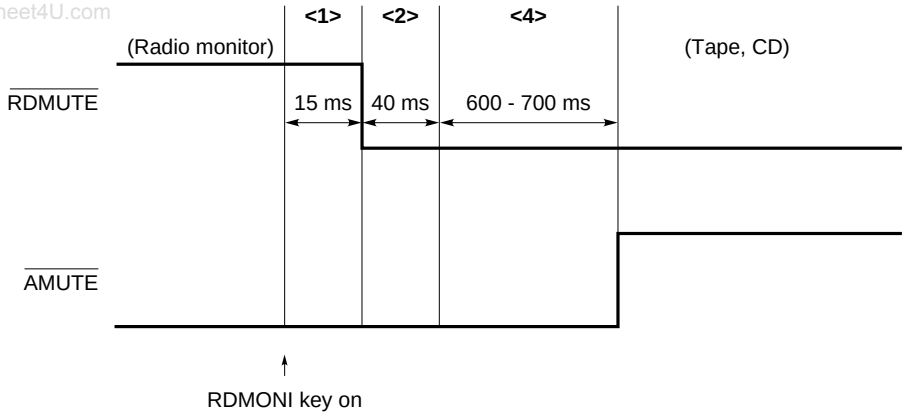

www.DataSheet4U.com

8. PIN I/O CIRCUITS

www.DataSheet4U.com

The I/O circuit of each pin of the μPD17012GF-058 is illustrated below in a simplified form.

(1) P0A (P0A0/ALARMIN, P0A1/SO1, P0A2/$\overline{SCK}$)
P0B (P0B1/BEEP, P0B0/IGNITION)
P1A (P1A2/MONO, P1A1/EVOL_SCK, P1A0/EVOL_DA)
P1D (P1D3/LOUD, P1D2/POWER, P1D1/BAND1, P1D0/BAND2) **(I/O)**

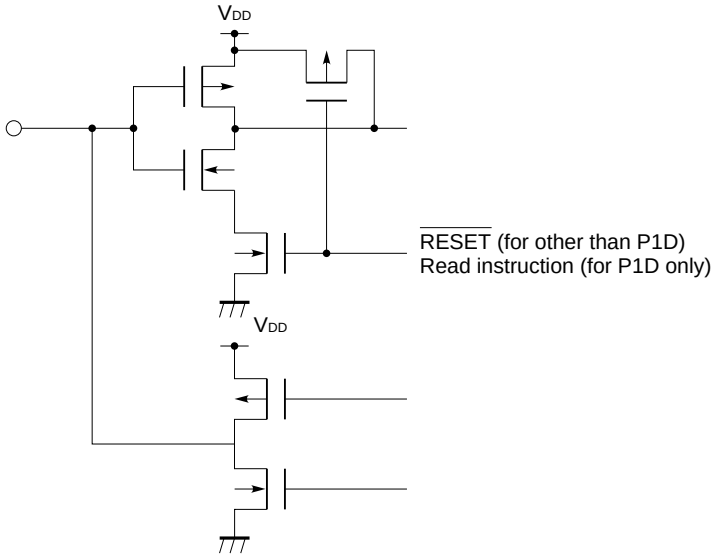

(2) P1C (P1C3/AGCC, P1C2/LOC, P1C1/$\overline{AMUTE}$, P1C0/$\overline{RDMUTE}$)
P2H0/POUT, P2G0/ILLUMI, P2E0/$\overline{LCD\ CS}$
PYA13/MTL, PYA12/CDOUT, PYA11/MODE2, PYA10/MODE1,
PYA9/KS9-PYA0/KS0 **(Output)**

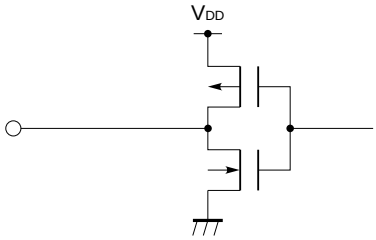

(3) P0C (P0C3/ALARMOUT, P0C2/KEYS2 - P0C0/KEYS0) (Output)

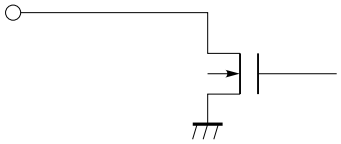

www.DataSheet4U.com

(4) P0D (P0D3/K3-P0D0/K0) (Input)

www.DataSheet4U.com

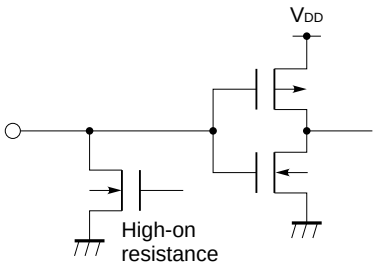

(5) P1B (P1B1/ADC1/KY-IN, P1B0/ADC0/SD) (Input)

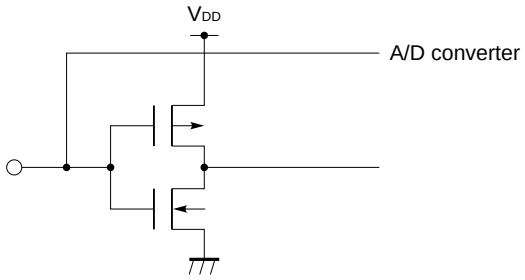

(6) P1B (P1B3/FMIFC, P1B2/AMIFC) (Input)

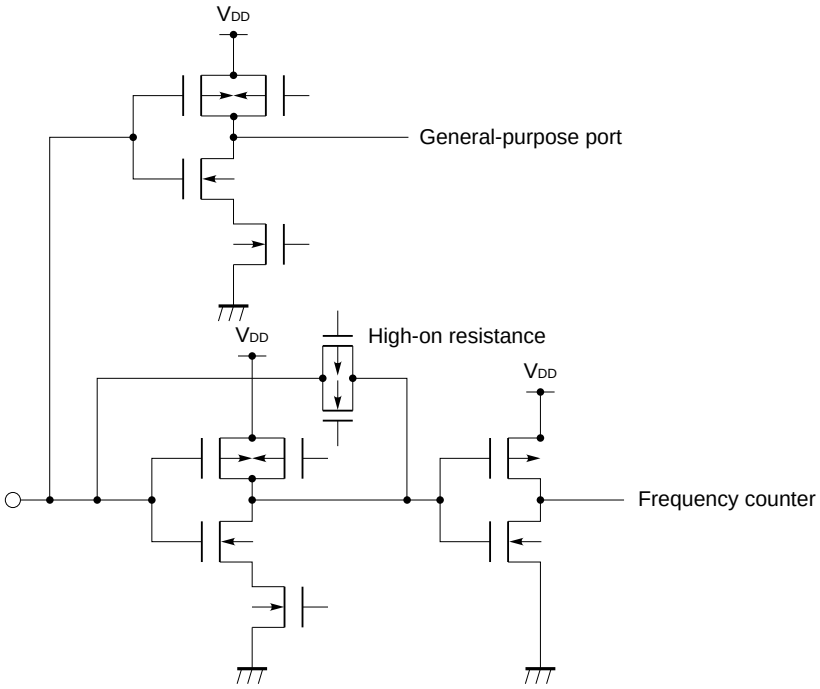

www.DataSheet4U.com

(7) CE
INT/$\overline{\text{REM}}$ } **(Schmitt-triggered input)**

www.DataSheet4U.com

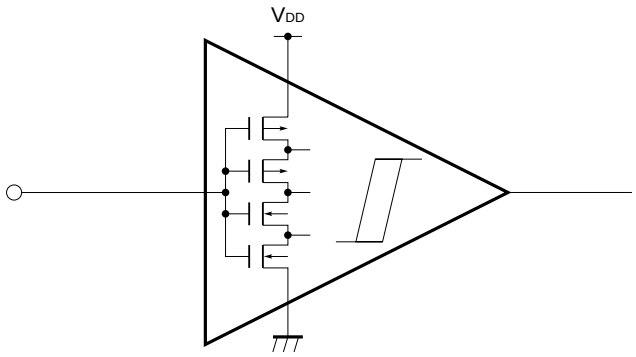

(8) X_{OUT} (Output), X_{IN} (Input)

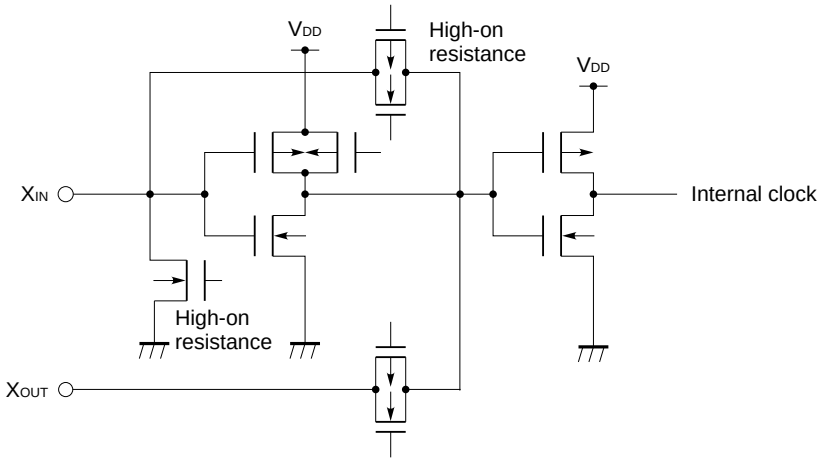

(9) EO (Output)

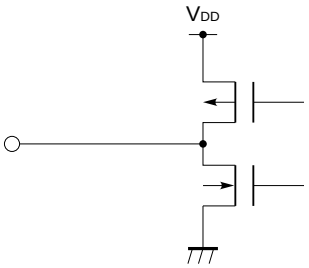

www.DataSheet4U.com

(10) VCOH, VCOL (Input)

www.DataSheet4U.com

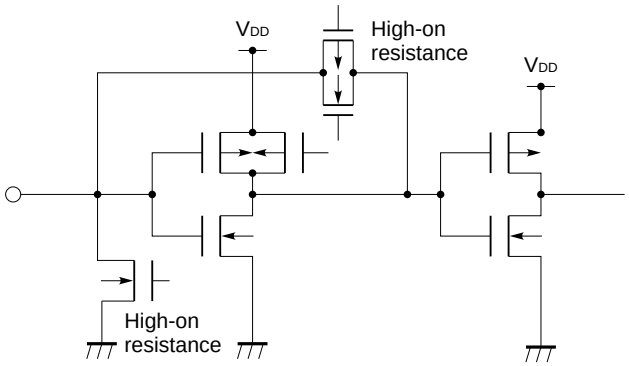

www.DataSheet4U.com

9. SAMPLE APPLICATION CIRCUITS

www.DataSheet4U.com

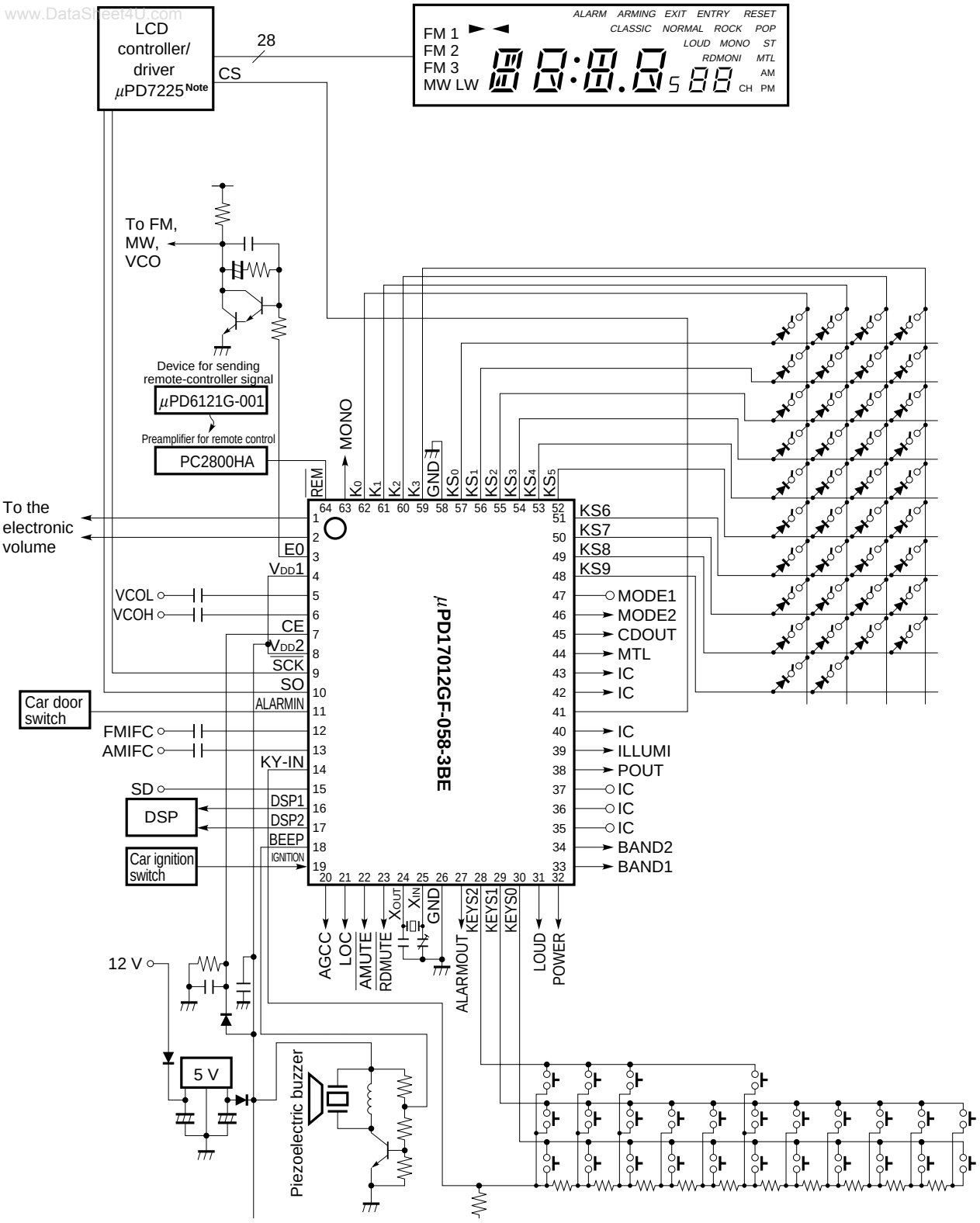

Note When the μPD7225 external LCD controller/driver is used, connect the C/$\overline{D}$ pin to the V_{DD} pin at the μPD7225.

www.DataSheet4U.com

10. ELECTRICAL CHARACTERISTICS (PRELIMINARY)

www.DataSheet4U.com

ABSOLUTE MAXIMUM RATINGS (T_A = 25 °C)

Parameter	Symbol	Conditions	Rated value	Unit
Supply voltage	V_{DD}		-0.3 to +6.0	V
Input voltage	V_I		-0.3 to V_{DD} + 0.3	V
Output voltage	V_O	Except for P0C0 to P0C3	-0.3 to V_{DD} + 0.3	V
Output high current	I_{OH}	Each pin	-12.0	mA
		Total for all pins	-20.0	mA
Output low current	I_{OL}	Each pin	15.0	mA
		Total for all pins	30.0	mA
Output withstand voltage	V_{BDS}	P0C0 - P0C3	14.0	V
Total loss	P_t		200	mW
Operating ambient temperature	T_A		-40 to +85	°C
Storage temperature	T_{stg}		-55 to +125	°C

Caution Absolute maximum ratings are rated values beyond which physical damage will be caused to the product; if the rated value of any of the parameters in the above table is exceeded, even momentarily, the quality of the product may deteriorate. Always use the product within its rated values.

RECOMMENDED OPERATING RANGES (T_A = -40 to +85 °C)

Parameter	Symbol	Conditions	MIN.	TYP.	MAX.	Unit
Supply voltage	V_{DD1}	When the entire chip is operating	4.5	5.0	5.5	V
	V_{DD2}	When the CPU is operating, but the PLL is not	3.5	5.0	5.5	V
Data hold voltage	V_{DDR}	When the crystal oscillator is stopped	2.3		5.5	V
Output withstand voltage	V_{BDS}	P0C0 - P0C3			12.0	V
Rise time of supply voltage	t_{rise}	V_{DD} : 0 → 4.5 V			500	ms

www.DataSheet4U.com

DC CHARACTERISTICS (T_A = -40 to +85 °C, V_{DD} = 5 V ± 10 %)

Parameter	Symbol	Conditions		MIN.	TYP.	MAX.	Unit
Supply current	I_{DD1}	When the CPU is operating but the PLL is not, with a sinusoidal wave applied to the X_{IN} pin (f_{IN} = 4.5 MHz, V_{IN} = V_{DD})			1.0	2.0	mA
	I_{DD2}	When the CPU is operating but the PLL is not, with a sinusoidal wave applied to the X_{IN} pin (f_{IN} = 4.5 MHz, V_{IN} = V_{DD}) When the HALT instruction is issued			0.5	1.0	mA
Data hold voltage	V_{DDR1}	When the crystal oscillator is operating	With timer FF for interruption detection	3.5			V
	V_{DDR2}	When the crystal oscillator is stopped	With timer FF for interruption detection	2.3			V
	V_{DDR3}		For holding data memory	2.0			V
Data hold current	I_{DDR1}	When the crystal oscillator is stopped	V_{DD} = 5 V, T_A = 25 °C		2.0	4.0	μA
	I_{DDR2}				2.0	20.0	μA
	I_{DDR3}		V_{DD} = 2.3 V, T_A = 25 °C		1.0	2.0	μA
	I_{DDR4}		V_{DD} = 2.3 V		1.0	10.0	μA
Input high voltage	V_{IH1}	P0A1, P0B0 - P0B3, P1A0 - P1A2, P1B0 - P1B3, P1D0 - P1D3		0.7V_{DD}		V_{DD}	V
	V_{IH2}	P0A0, P0A2, CE, INT		0.8V_{DD}		V_{DD}	V
	V_{IH3}	P0D0 - P0D3		0.6V_{DD}		V_{DD}	V
Input low voltage	V_{IL1}	P0A1, P0B0 - P0B3, P0D0 - P0D3, P1A0 - P1A2, P1B0 - P1B3, P1D0 - P1D3				0.2V_{DD}	V
	V_{IL2}	P0A0, P0A2, CE, INT				0.2V_{DD}	V
Output high current	I_{OH1}	P0A0 - P0A2, P0B0 - P0B3, P1A0 - P1A2, P1C0 - P1C3, P1D0 - P1D3	V_{OH} = V_{DD} - 1 V	-1.0			mA
	I_{OH2}	PYA0 - PYA9, PYA11 - PYA15, P2E0, P2F0, P2G0, P2H0, EO	V_{OH} = V_{DD} - 1 V	-1.0			mA
Output low current	I_{OL1}	P0A0 - P0A2, P0B0 - P0B3, P1A0 - P1A2, P1C0 - P1C3, P1D0 - P1D3	V_{OL} = 1 V	1.0			mA
	I_{OL2}	PYA0 - PYA9, PYA11 - PYA15, P2E0, P2F0, P2G0, P2H0, EO	V_{OL} = 1 V	1.0			mA
	I_{OL3}	P0C0 - P0C3	V_{OL} = 1 V	10			mA
Input high current	I_{IH1}	When the VCOH pin is pulled down	V_{IH} = V_{DD}	0.1			mA
	I_{IH2}	When the VCOL pin is pulled down	V_{IH} = V_{DD}	0.1			mA
	I_{IH3}	When the X_{IN} pin is pulled down	V_{IH} = V_{DD}	0.1			mA
	I_{IH4}	When the P0D0 to P0D3 pins are pulled down	V_{IH} = V_{DD}	10		150	μA
Output-off leakage current	I_{L1}	P0C0 - P0C3	V_{OH} = 12 V			1.0	μA
	I_{L2}	EO	V_{OH} = V_{DD}, V_{OL} = 0 V			±1.0	μA

www.DataSheet4U.com

www.DataSheet4U.com

AC CHARACTERISTICS (T_A = -40 to +85 °C, V_{DD} = 5 V ± 10 %)

www.DataSheet4U.com

Parameter	Symbol	Conditions	MIN.	TYP.	MAX.	Unit
Operating frequency	f_{IN1}	VCOL pin in MF mode, with a sinusoidal wave applied at V_{IN} = 0.15 V_{p-p}	0.90		30	MHz
		VCOL pin in MF mode, with a sinusoidal wave applied at V_{IN} = 0.3 V_{p-p}	0.50		20	MHz
	f_{IN2}	VCOL pin in HF mode, with a sinusoidal wave applied at V_{IN} = 0.15 V_{p-p}	5		25	MHz
		VCOL pin in HF mode, with a sinusoidal wave applied at V_{IN} = 0.3 V_{p-p}	5		40	MHz
	f_{IN3}	VCOH pin in VHF mode, with a sinusoidal wave applied at V_{IN} = 0.15 V_{p-p}	60		130	MHz
		VCOH pin in VHF mode, with a sinusoidal wave applied at V_{IN} = 0.3 V_{p-p}	30		250	MHz
	f_{IN4}	AMIFC FMIFC pin in AMIF count mode, with a sinusoidal wave applied at V_{IN} = 0.3 V_{p-p}	0.3		1.0	MHz
	f_{IN5}	AMIFC pin in AMIF count mode, with a sinusoidal wave applied at V_{IN} = 0.1 V_{p-p}	0.44		0.46	MHz
	f_{IN6}	FMIFC pin in FMIF count mode, with a sinusoidal wave applied at V_{IN} = 0.3 V_{p-p}	5		15	MHz
	f_{IN7}	FMIFC pin in FMIF count mode, with a sinusoidal wave applied at V_{IN} = 0.1 V_{p-p}	10.5		10.9	MHz

A/D CONVERTER CHARACTERISTICS (T_A = -40 to +85 °C, V_{DD} = 5 V ± 10 %)

Parameter	Symbol	Conditions	MIN.	TYP.	MAX.	Unit
Resolution of A/D conversion					6	bit
Total error in A/D conversion		T_A = -10 to +50 °C		±1.0	±1.5	LSB

OTHER CHARACTERISTICS (T_A = +25 °C, V_{DD} = 5.0 V, for reference purposes only)

Parameter	Symbol	Conditions	MIN.	TYP.	MAX.	Unit
Supply current	I_{DD3}	When the CPU and PLL are operating, with a sinusoidal wave applied to the VCOH pin (f_{IN} = 130 MHz, V_{IN} = 0.3 V_{p-p})		12		mA
	I_{DD4}	When the CPU and PLL are operating, with a sinusoidal wave applied to the VCOH pin (f_{IN} = 250 MHz, V_{IN} = 0.3 V_{p-p})		13		mA

www.DataSheet4U.com

11. PACKAGE DRAWING

www.DataSheet4U.co

64 PIN PLASTIC QFP (14×20)

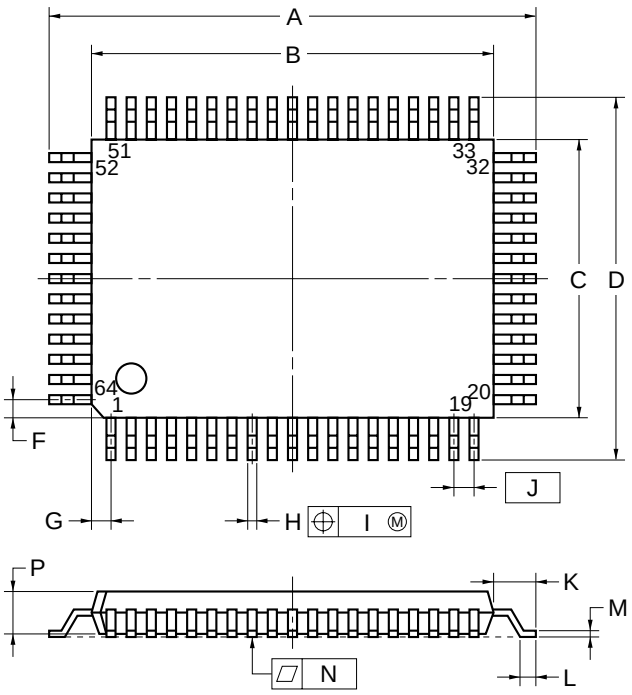

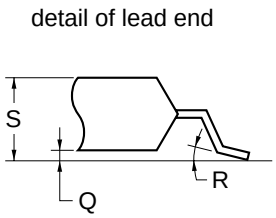

NOTE

Each lead centerline is located within 0.20 mm (0.008 inch) of its true position (T.P.) at maximum material condition.

ITEM	MILLIMETERS	INCHES
A	23.2±0.2	$0.913^{+0.009}_{-0.008}$
B	20.0±0.2	$0.787^{+0.009}_{-0.008}$
C	14.0±0.2	$0.551^{+0.009}_{-0.008}$
D	17.2±0.2	0.677±0.008
F	1.0	0.039
G	1.0	0.039
H	0.40±0.10	$0.016^{+0.004}_{-0.005}$
I	0.20	0.008
J	1.0 (T.P.)	0.039 (T.P.)
K	1.6±0.2	0.063±0.008
L	0.8±0.2	$0.031^{+0.009}_{-0.008}$
M	$0.15^{+0.10}_{-0.05}$	$0.006^{+0.004}_{-0.003}$
N	0.10	0.004
P	2.7	0.106
Q	0.125±0.075	0.005±0.003
R	5°±5°	5°±5°
S	3.0 MAX.	0.119 MAX.

S64GF-100-3B8, 3BE-3

www.DataSheet4U.com

12. RECOMMENDED SOLDERING CONDITIONS

www.DataSheet4U.com

The conditions listed below shall be met when soldering the μPD17012GF-058.

For details of the recommended soldering conditions, refer to our document *SMD Surface Mount Technology Manual* (C10535E).

Please consult with our sales offices in case any other soldering process is used, or in case soldering is done under different conditions.

Table 12-1. Soldering Conditions for Surface-Mount Devices

μPD17012GF-058-3BE: 64-pin plastic QFP (14 × 20 mm, 0.1 mm pitch)

Soldering process	Soldering conditions	Symbol
Infrared ray reflow	Peak package's surface temperature: 235 ˚C Reflow time: 30 seconds or less (at 210 ˚C or more) Maximum allowable number of reflow processes: 2 Exposure limit[Note]: 7 days (20 hours of pre-baking is required at 125 ˚C afterward.) <Cautions> Non-heat-resistant trays, such as magazine and taping trays, cannot be backed before unpacking.	IR35-207-2
VPS	Peak package's surface temperature: 215 ˚C Reflow time: 40 seconds or less (at 200 ˚C or more) Maximum allowable number of reflow processes: 2 Exposure limit[Note]: 7 days (20 hours of pre-baking is required at 125 ˚C afterward.) <Cautions> Non-heat-resistant trays, such as magazine and taping trays, cannot be backed before unpacking.	VP15-207-2
Wave soldering	Temperature in the soldering vessel: 260 ˚C or less Soldering time: 10 seconds or less Number of soldering processes: 1 Pre-heating temperature: 120 ˚C max. (package surface temperature) Exposure limit[Note]: 7 days (20 hours of pre-baking is required at 125 ˚C afterward.) <Cautions> Non-heat-resistant trays, such as magazine and taping trays, cannot be backed before unpacking.	WS60-207-1
Partial heating method	Terminal temperature: 300 ˚C or less Flow time: 3 seconds or less (for each side of device)	-

Note Exposure limit before soldering after dry-pack package is opened.
Storage conditions: Temperature of 25 ˚C and maximum relative humidity at 65 % or less

Caution Do not apply more than a single process at once, except for "Partial heating method."

www.DataSheet4U.com

APPENDIX COMMUNICATION WITH ELECTRONIC VOLUME CONTROL IC (I²C BUS INTERFACE)

www.DataSheet4U.com

The μPD17012-058 sends specified data, such as volume and balance data, to the electronic volume control IC. Two buses, the data bus and clock bus, are necessary to output data to the electronic volume control IC. Data and clock signals are output from the EVOL_DA pin (pin 2) and EVOL_SCK pin (pin 1) of the μPD17012-058.

Figure A-1. Pin Connections (Electronic Volume Control)

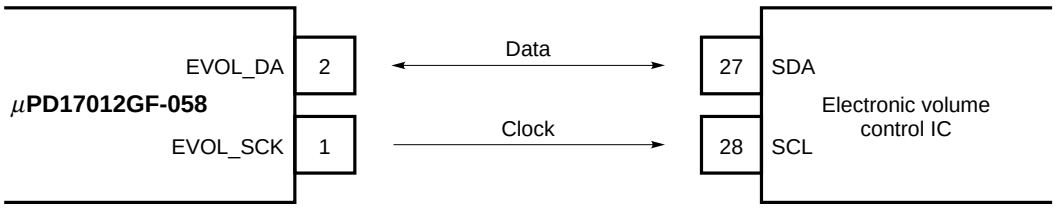

Electronic volume control data consists of nine bits (eight bits for data and a check bit). The electronic volume address (nine bits) and control data (nine bits) are sequentially transferred N times, where N is the number of transferred data items, such as the volume and balance data.

Figure A-2. Data Transfer Format (Electronic Volume Control)

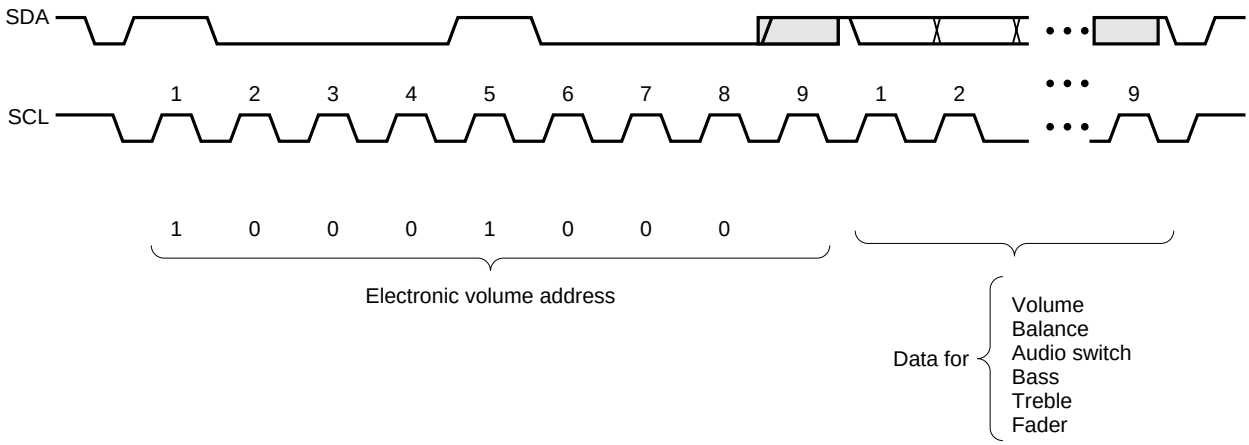

www.DataSheet4U.com

[MEMO]

www.DataSheet4U.com

www.DataSheet4U.com

NOTES FOR CMOS DEVICES

www.DataSheet4U.com

① PRECAUTION AGAINST ESD FOR SEMICONDUCTORS

Note: Strong electric field, when exposed to a MOS device, can cause destruction of the gate oxide and ultimately degrade the device operation. Steps must be taken to stop generation of static electricity as much as possible, and quickly dissipate it once, when it has occurred. Environmental control must be adequate. When it is dry, humidifier should be used. It is recommended to avoid using insulators that easily build static electricity. Semiconductor devices must be stored and transported in an anti-static container, static shielding bag or conductive material. All test and measurement tools including work bench and floor should be grounded. The operator should be grounded using wrist strap. Semiconductor devices must not be touched with bare hands. Similar precautions need to be taken for PW boards with semiconductor devices on it.

② HANDLING OF UNUSED INPUT PINS FOR CMOS

Note: No connection for CMOS device inputs can be cause of malfunction. If no connection is provided to the input pins, it is possible that an internal input level may be generated due to noise, etc., hence causing malfunction. CMOS device behave differently than Bipolar or NMOS devices. Input levels of CMOS devices must be fixed high or low by using a pull-up or pull-down circuitry. Each unused pin should be connected to V_{DD} or GND with a resistor, if it is considered to have a possibility of being an output pin. All handling related to the unused pins must be judged device by device and related specifications governing the devices.

③ STATUS BEFORE INITIALIZATION OF MOS DEVICES

Note: Power-on does not necessarily define initial status of MOS device. Production process of MOS does not define the initial operation status of the device. Immediately after the power source is turned ON, the devices with reset function have not yet been initialized. Hence, power-on does not guarantee out-pin levels, I/O settings or contents of registers. Device is not initialized until the reset signal is received. Reset operation must be executed immediately after power-on for devices having reset function.

www.DataSheet4U.com

www.DataSheet4U.com

Regional Information

Some information contained in this document may vary from country to country. Before using any NEC product in your application, please contact the NEC office in your country to obtain a list of authorized representatives and distributors. They will verify:

- Device availability
- Ordering information
- Product release schedule
- Availability of related technical literature
- Development environment specifications (for example, specifications for third-party tools and components, host computers, power plugs, AC supply voltages, and so forth)
- Network requirements

In addition, trademarks, registered trademarks, export restrictions, and other legal issues may also vary from country to country.

NEC Electronics Inc. (U.S.)
Santa Clara, California
Tel: 800-366-9782
Fax: 800-729-9288

NEC Electronics (Germany) GmbH
Duesseldorf, Germany
Tel: 0211-65 03 02
Fax: 0211-65 03 490

NEC Electronics (UK) Ltd.
Milton Keynes, UK
Tel: 01908-691-133
Fax: 01908-670-290

NEC Electronics Italiana s.r.1.
Milano, Italy
Tel: 02-66 75 41
Fax: 02-66 75 42 99

NEC Electronics (Germany) GmbH
Benelux Office
Eindhoven, The Netherlands
Tel: 040-2445845
Fax: 040-2444580

NEC Electronics (France) S.A.
Velizy-Villacoublay, France
Tel: 01-30-67 58 00
Fax: 01-30-67 58 99

NEC Electronics (France) S.A.
Spain Office
Madrid, Spain
Tel: 01-504-2787
Fax: 01-504-2860

NEC Electronics (Germany) GmbH
Scandinavia Office
Taeby, Sweden
Tel: 08-63 80 820
Fax: 08-63 80 388

NEC Electronics Hong Kong Ltd.
Hong Kong
Tel: 2886-9318
Fax: 2886-9022/9044

NEC Electronics Hong Kong Ltd.
Seoul Branch
Seoul, Korea
Tel: 02-528-0303
Fax: 02-528-4411

NEC Electronics Singapore Pte. Ltd.
United Square, Singapore 1130
Tel: 253-8311
Fax: 250-3583

NEC Electronics Taiwan Ltd.
Taipei, Taiwan
Tel: 02-719-2377
Fax: 02-719-5951

NEC do Brasil S.A.
Sao Paulo-SP, Brasil
Tel: 011-889-1680
Fax: 011-889-1689

J96. 8

www.DataSheet4U.com

www.DataSheet4U.com

Caution This product contains an I^2C bus interface circuit.
When using the I^2C bus interface, notify its use to NEC when ordering custom code. NEC can guarantee the following only when the customer informs NEC of the use of the interface:
Purchase of NEC I^2C components conveys a license under the Philips I^2C Patent Rights to use these components in an I^2C system, provided that the system conforms to the I^2C Standard Specification as defined by Philips.

The application circuits and their parameters are for reference only and are not intended for use in actual design-ins.

No part of this document may be copied or reproduced in any form or by any means without the prior written consent of NEC Corporation. NEC Corporation assumes no responsibility for any errors which may appear in this document.
NEC Corporation does not assume any liability for infringement of patents, copyrights or other intellectual property rights of third parties by or arising from use of a device described herein or any other liability arising from use of such device. No license, either express, implied or otherwise, is granted under any patents, copyrights or other intellectual property rights of NEC Corporation or others.
While NEC Corporation has been making continuous effort to enhance the reliability of its semiconductor devices, the possibility of defects cannot be eliminated entirely. To minimize risks of damage or injury to persons or property arising from a defect in an NEC semiconductor device, customers must incorporate sufficient safety measures in its design, such as redundancy, fire-containment, and anti-failure features.
NEC devices are classified into the following three quality grades:
"Standard", "Special", and "Specific". The Specific quality grade applies only to devices developed based on a customer designated "quality assurance program" for a specific application. The recommended applications of a device depend on its quality grade, as indicated below. Customers must check the quality grade of each device before using it in a particular application.

Standard: Computers, office equipment, communications equipment, test and measurement equipment, audio and visual equipment, home electronic appliances, machine tools, personal electronic equipment and industrial robots

Special: Transportation equipment (automobiles, trains, ships, etc.), traffic control systems, anti-disaster systems, anti-crime systems, safety equipment and medical equipment (not specifically designed for life support)

Specific: Aircrafts, aerospace equipment, submersible repeaters, nuclear reactor control systems, life support systems or medical equipment for life support, etc.

The quality grade of NEC devices is "Standard" unless otherwise specified in NEC's Data Sheets or Data Books. If customers intend to use NEC devices for applications other than those specified for Standard quality grade, they should contact an NEC sales representative in advance.
Anti-radioactive design is not implemented in this product.

M4 96.5

www.DataSheet4U.com