WH4004A Character 40x4

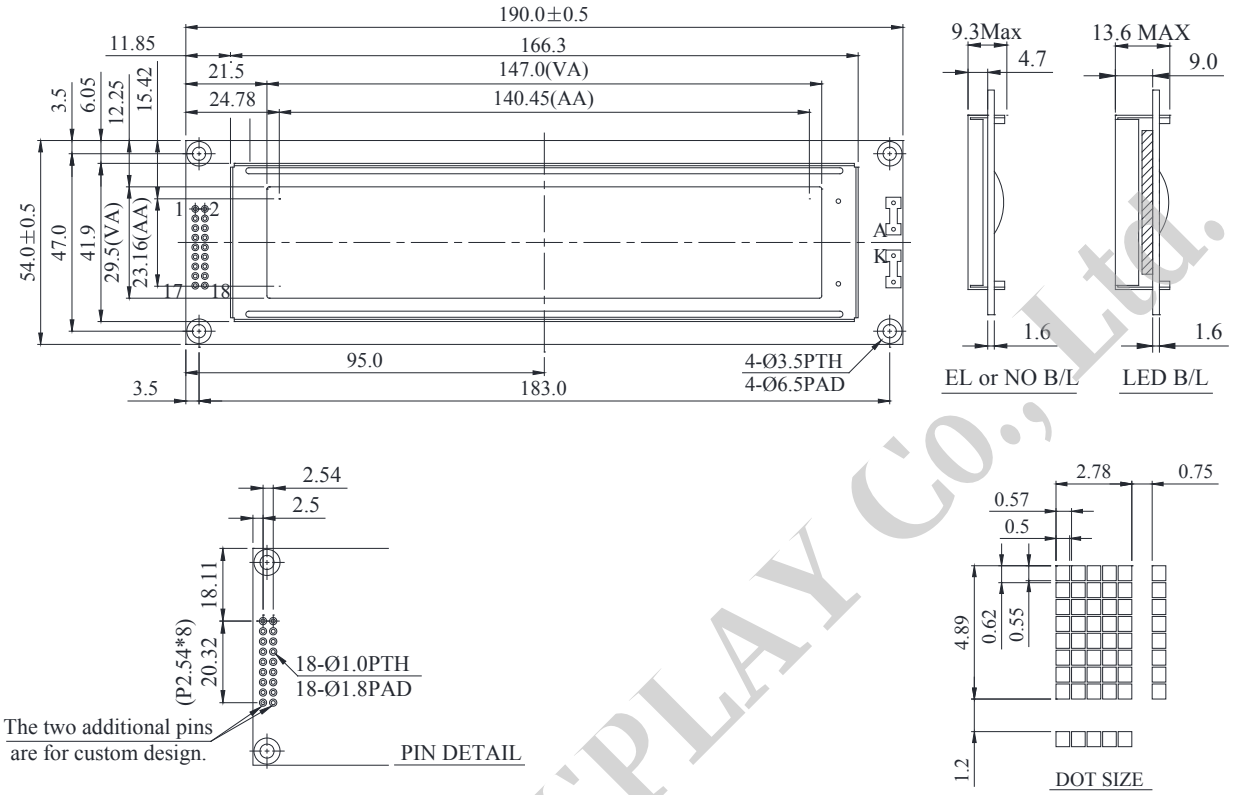

Feature

1.5x8 dots includes cursor
2.Bulit-in controller (ST7066 or Equivalent)
3.+5V power supply (Also available for +3V)
4.N.V, optional for +3V power supply
5.1/16 duty cycle
6.LED can be driven by PIN1, PIN2, PIN17, PIN18 or A and K

Pin No.	Symbol	Description
1	DB7	Data bus line
2	DB6	Data bus line
3	DB5	Data bus line
4	DB4	Data bus line
5	DB3	Data bus line
6	DB2	Data bus line
7	DB1	Data bus line
8	DB0	Data bus line
9	E1	Enable signal
10	R/W	Read/Write select signal
11	RS	Data/ Instruction select signal
12	V_O	Contrast Adjustment
13	V_{SS}	Ground
14	V_{DD}	Power supply for logic
15	E2	Enable signal
16	NC	No connection
17	A	Power supply for B/L +
18	K	Power supply for B/L -

Mechanical Data

Item	Standard Value	Unit
Module Dimension	190.0 x 54.0	mm
Viewing Area	147.0 x 29.5	mm
Mounting Hole	183.0 x 47.0	mm
Character Size	2.78 x 4.89	mm

Electrical Characteristics

Item	Symbol	Standard Value typ.	Unit
Input Voltage	VDD	3/5	V
Recommended LCD Driving Voltage for Normal Temp. Version module @25°C	VDD-VO	4.35	V

Display Character Address Code

Display position

	1	2	3	4	5	6	7	8	9	10	11	12	---	---	---	40	
DD RAM Address	00	01														27	Line 1
DD RAM Address	40	41														67	Line 2
DD RAM Address	00	01														27	Line 3
DD RAM Address	40	41														67	Line 4

WINSTAR DISPLAY Co., Ltd.