DATA SHEET

RENESAS

MOS INTEGRATED CIRCUIT

μPD168110

MICROSTEP DRIVER FOR DRIVING CAMERA LENS

Not recommend for new design

DESCRIPTION

The μPD168110 is a monolithic 2-channel H bridge driver that consists of a CMOS controller and a MOS output stage. It can reduce the current consumption and the voltage loss at the output stage compared with a conventional driver using bipolar transistors, thanks to employment of a MOS process. This product employs a P-channel MOSFET on the high side of the output stage, eliminating a charge pump. As a result, the circuit current consumption can be substantially reduced during operation.

This product is ideal for driving the motor of a digital still camera as it can switch over between two-phase excitation driving and microstep driving, using a stepper motor.

FEATURES

- Two H bridge circuits employing power MOSFET
- Current feedback 64-step microstep driving and two-phase excitation driving selectable
- Low on-resistance: 2 Ω MAX.
- 3 V power supply
  - Minimum operating power supply voltage V_{DD} = 2.7 V
- Under voltage lockout circuit
  - Shuts down internal circuitry at V_{DD} = 1.7 V TYP.
- 24-pin TSSOP

ORDERING INFORMATION

Part Number	Package
μPD168110MA-6A5	24-pin plastic TSSOP (5.72 mm (225))

The information in this document is subject to change without notice. Before using this document, please confirm that this is the latest version.
Not all products and/or types are available in every country. Please check with an NEC Electronics sales representative for availability and additional information.

Document No. S15840EJ2V0DS00 (2nd edition)
Date Published June 2005 NS CP(K)
Printed in Japan

The mark ★ shows major revised points.

© NEC Electronics Corporation 2003

PIN FUNCTIONS

Package: 24-pin TSSOP

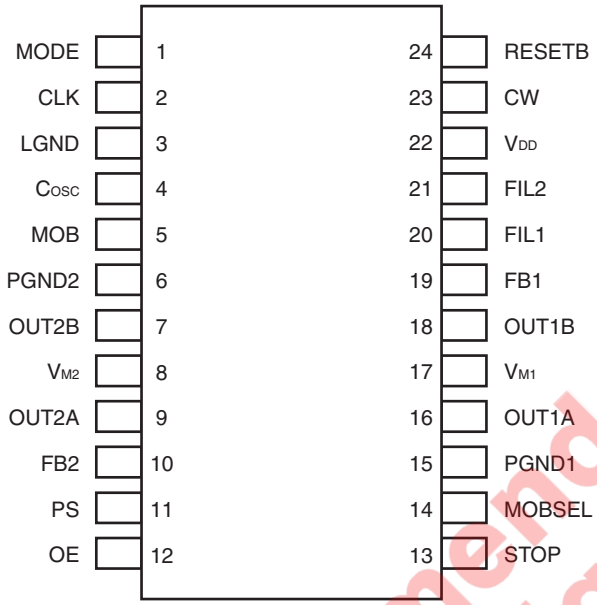

Pin No.	Pin Name	Pin Function
1	MODE	Microstep/2-phase excitation switch pin
2	CLK	Pulse input pin
3	LGND	Control block GND pin
4	C_{OSC}	Pin connecting capacitor for output oscillator
5	MOB	Phase detection output pin
6	PGND2	Output block GND pin
7	OUT2B	Channel 2 output B
8	V_{M2}	Motor power pin
9	OUT2A	Channel 2 output A
10	FB2	Channel 2 current detection resistor connecting pin
11	PS	Power save mode pin
12	OE	Output enable pin
13	STOP	Stop mode pin
14	MOBSEL	MOB output select pin
15	PGND1	Output block GND pin
16	OUT1A	Channel 1 output A
17	V_{M1}	Motor power pin
18	OUT1B	Channel 1 output B
19	FB1	Channel 1 current detection resistor connecting pin
20	FIL1	Channel 1 filter capacitor connecting pin
21	FIL2	Channel 2 filter capacitor connecting pin
22	V_{DD}	Control block power pin
23	CW	Revolution direction setting pin
24	RESETB	Reset input pin

Not recommend for new design

BLOCK DIAGRAM

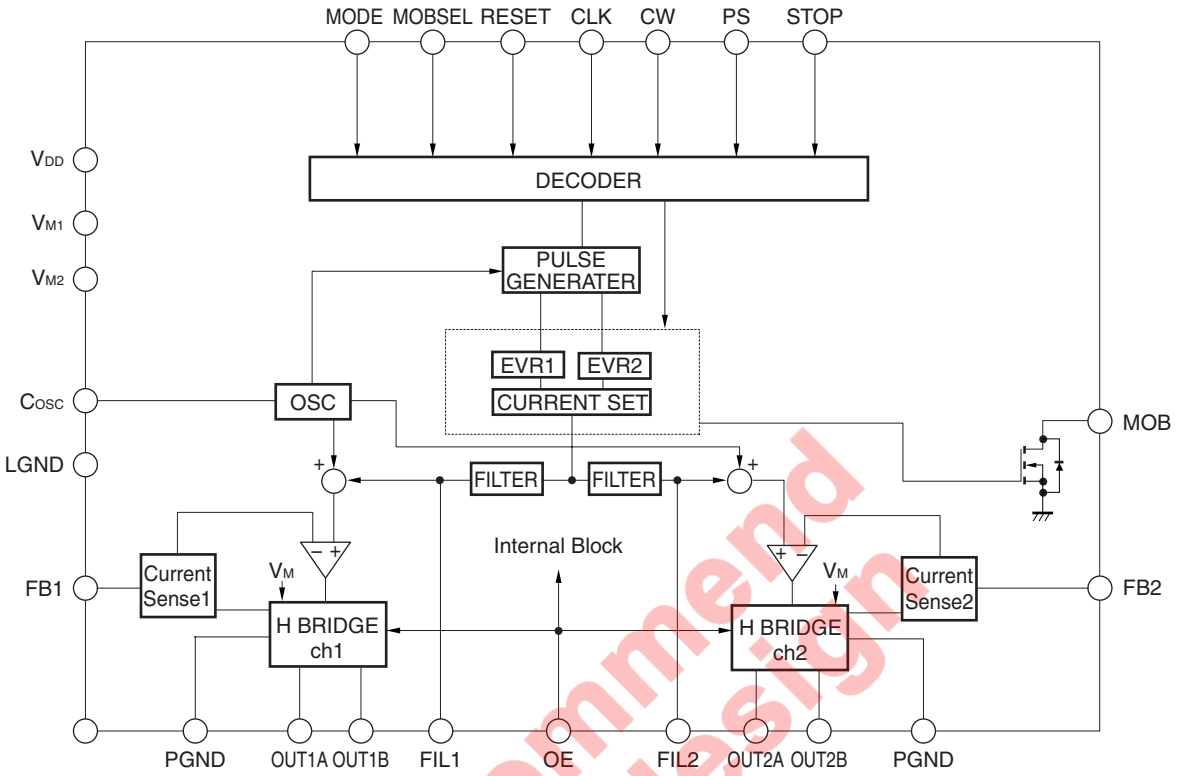

Not recommend for new design

Truth Table

RESET	CLK	CW	OE	PS	STOP	MODE	MOBSEL	Operation Mode
H	↑	L	H	L	L	H	L	Microstep CW mode MOB: 1 pulse/cycle
H	↑	H	H	L	L	H	L	Microstep CCW mode MOB: 1 pulse/cycle
H	↑	L	H	L	L	H	H	Microstep CW mode MOB: 4 pulses/cycle
H	↑	H	H	L	L	H	H	Microstep CCW mode MOB: 4 pulses/cycle
H	↑	L	H	L	L	L	X	2-phase CW mode
H	↑	H	H	L	L	L	X	2-phase CCW mode
H	X	X	L	X	X	X	X	Output Hi-Z
H	X	X	H	L	H	H	X	STOP mode after MOB = L (CLK must be input until MOB = L)
H	X	X	H	H	H	H	X	PS mode after MOB = L (CLK must be input until MOB = L)
H	X	X	H	H	L	H	X	Setting prohibited
L	X	X	X	X	X	X	X	Reset mode

H: High level, L: Low level, X: High level or low level

Command Input Timing Chart

In microstep mode

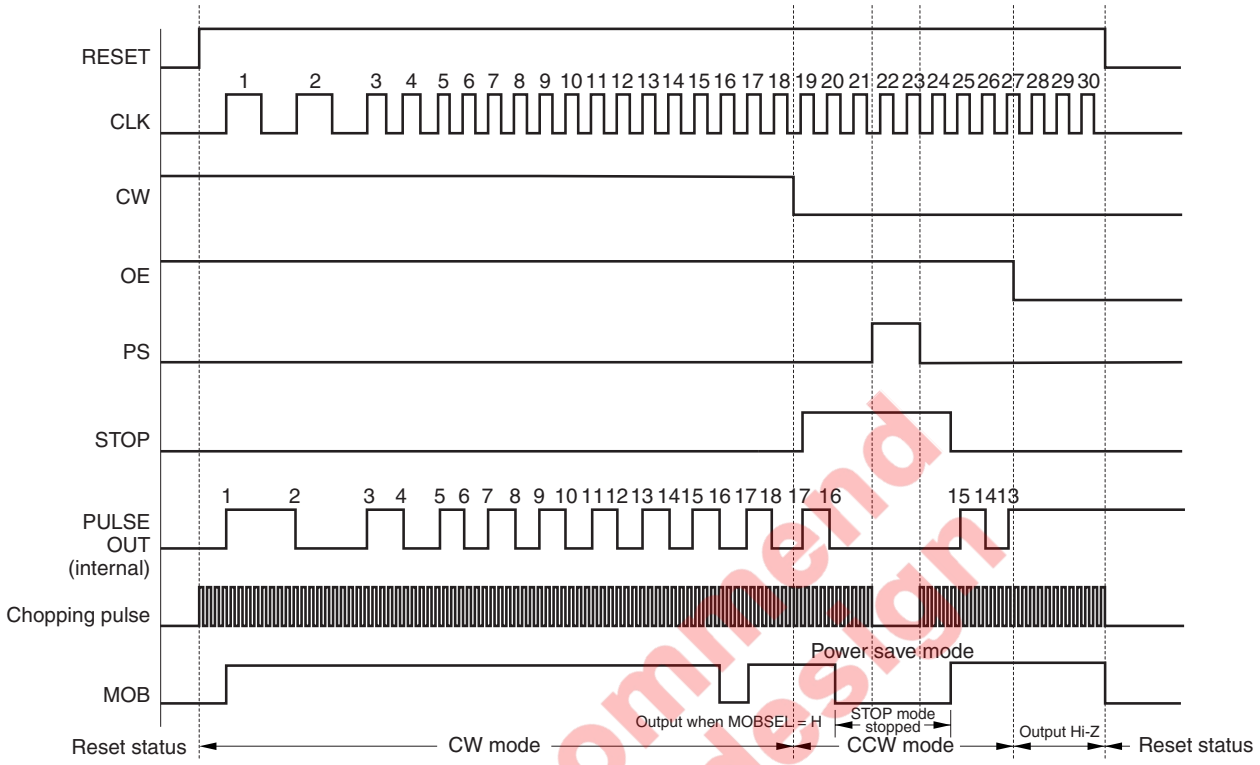

Not recommend for new design

Standard Connection Diagram

Microstep/2-phase excitation driving

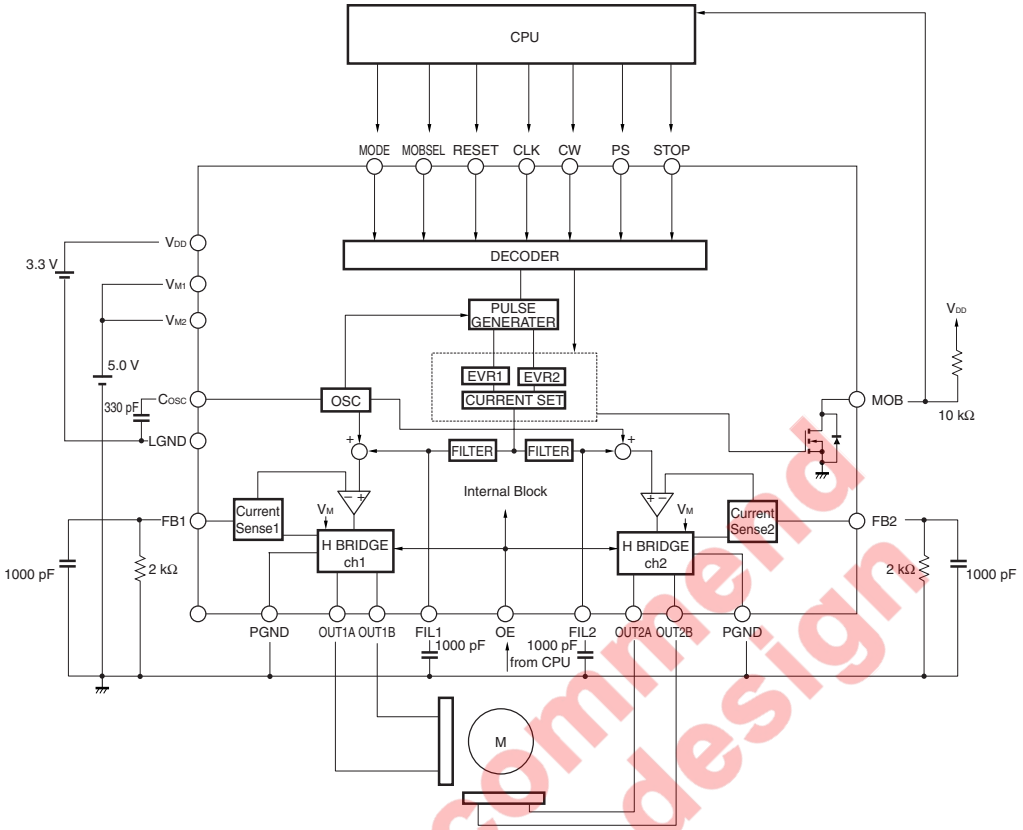

Only 2-phase excitation driving

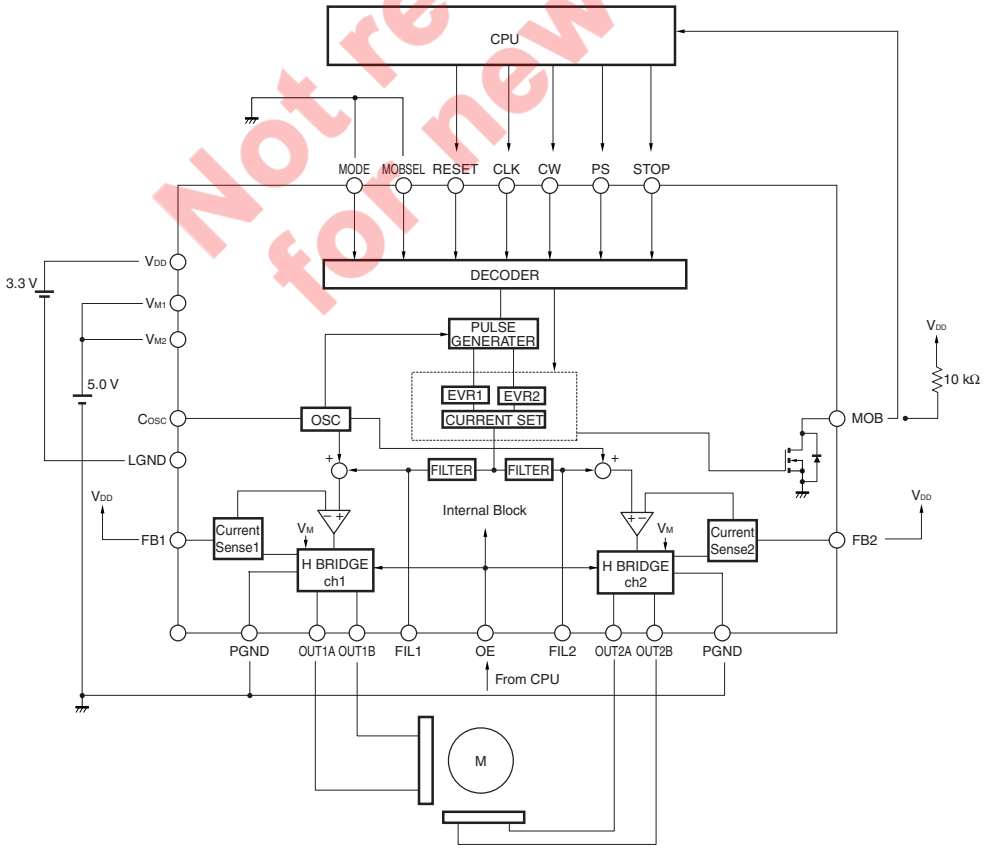

Not recommend for new design

Output Timing Chart

• Microstep output mode

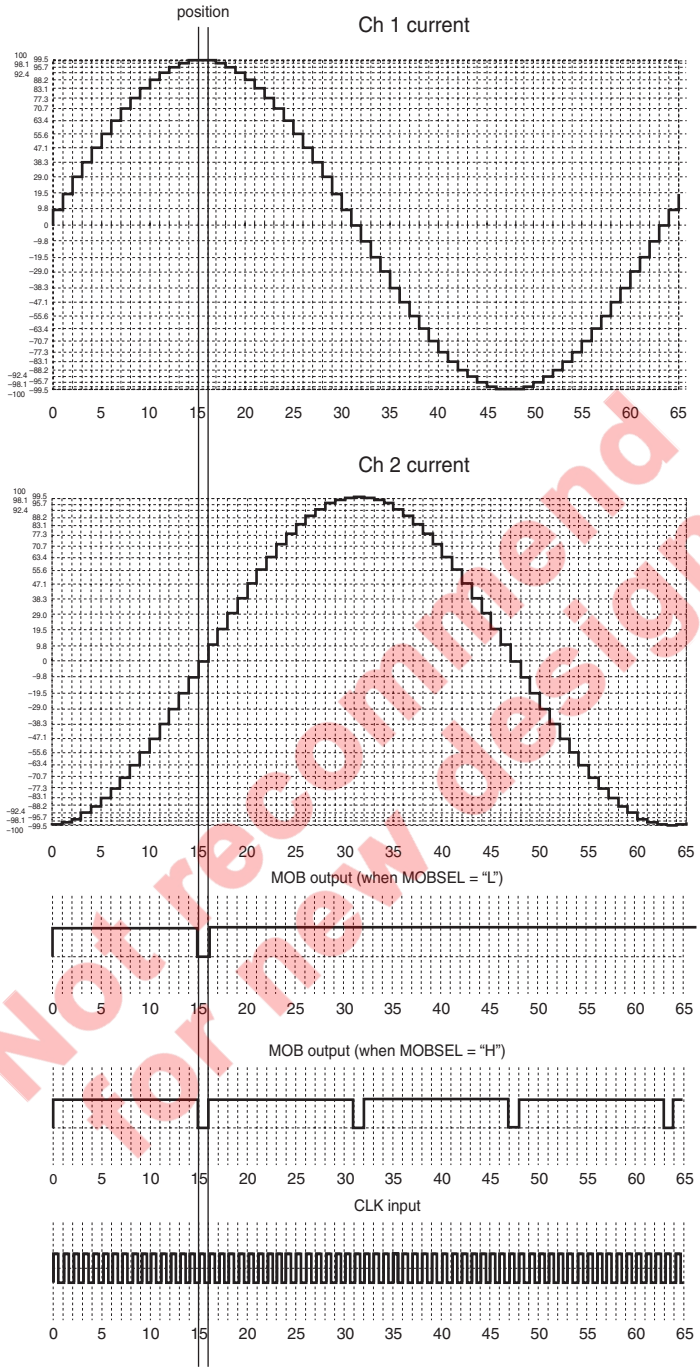

Not recommend for new design

The horizontal axis indicates the number of steps. This figure shows an example in the CW mode. The pulse advances in synchronization with the rising edge of CLK. The current flows into ch 1 and ch 2 in the positive direction when it flows from OUT1A to OUT1B, and in the negative direction when it flows from OUT1B to OUT1A (the values shown above are ideal values and do not indicate the actual values).

Output Timing Chart

• 2-phase excitation output mode

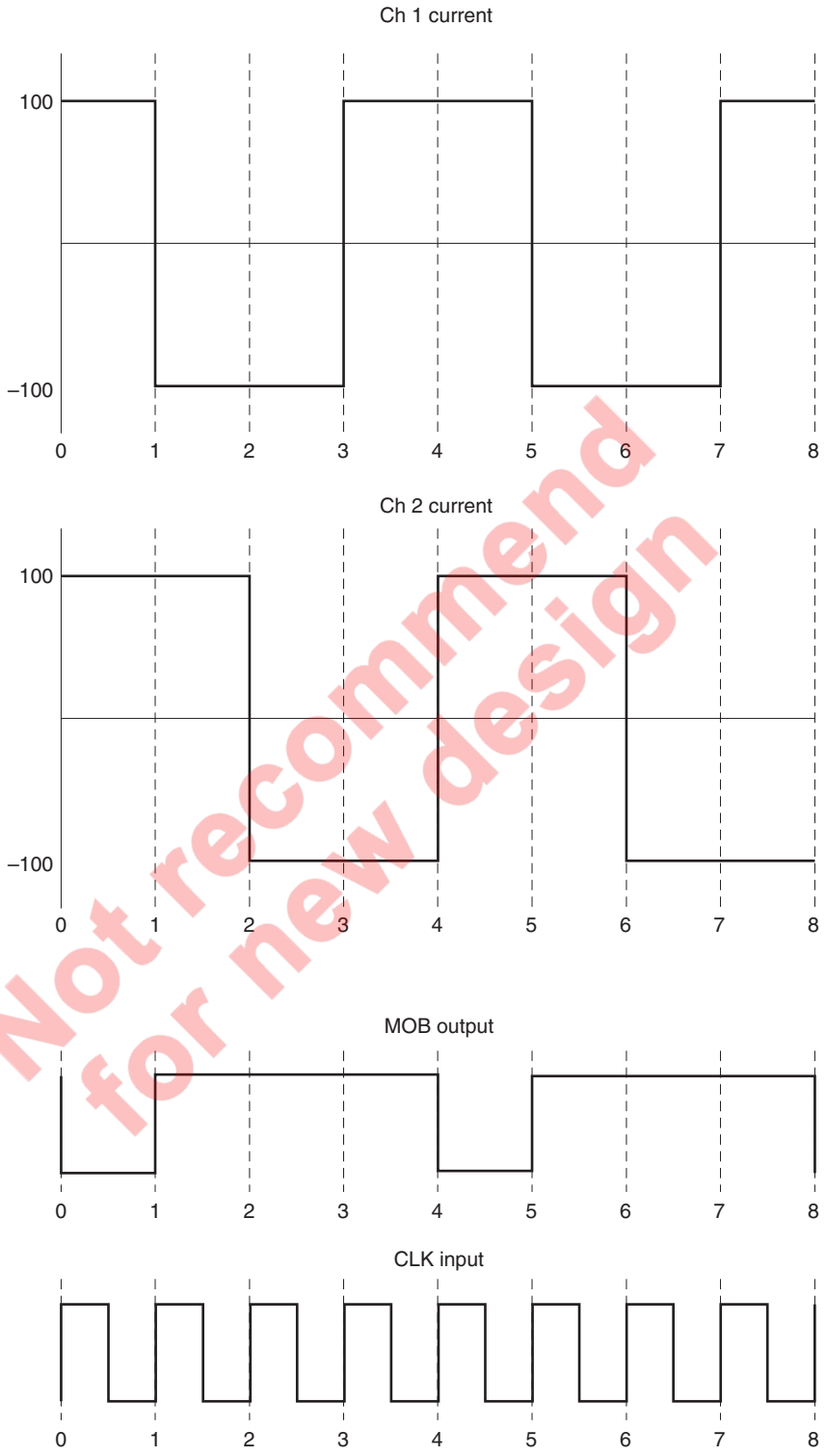

Not recommend for new design

The horizontal axis indicates the number of steps. This figure shows an example in the CW mode. The current flows into ch 1 and ch 2 in the positive direction when it flows from OUT1A to OUT1B, and in the negative direction when it flows from OUT1B to OUT1A.

Relationship Between Revolution Angle, Phase Current, and Vector Amount (64 microsteps)

Step	Revolution Angle	Phase A – Phase Current			Phase B – Phase Current			Vector Amount
		Min.	Typ.	Max.	Min.	Typ.	Max.	Typ.
θ0	0	–	0	3.8	–	100	–	100
θ1	5.625	2.5	9.8	17.0	94.5	100	104.5	100.48
θ2	11.250	12.4	19.5	26.5	93.2	98.1	103.0	100
θ3	16.875	22.1	29.0	36.1	90.7	95.7	100.7	100.02
θ4	22.500	31.3	38.3	45.3	87.4	92.4	97.4	100.02
θ5	28.125	40.1	47.1	54.1	83.2	88.2	93.2	99.99
θ6	33.750	48.6	55.6	62.6	78.1	83.1	88.1	99.98
θ7	39.375	58.4	63.4	68.4	72.3	77.3	82.3	99.97
θ8	45	65.7	70.7	75.7	65.7	70.7	75.7	99.98
θ9	50.625	72.3	77.3	82.3	58.4	63.4	68.4	99.97
θ10	56.250	78.1	83.1	88.1	48.6	55.6	62.6	99.98
θ11	61.875	83.2	88.2	93.4	40.1	47.1	54.1	99.99
θ12	67.500	87.4	92.4	97.4	31.3	38.3	45.3	100.02
θ13	73.125	90.7	95.7	100.7	22.1	29.0	36.1	100.02
θ14	78.750	93.2	98.1	103.0	12.4	19.5	26.5	100
θ15	84.375	94.5	100	104.5	2.5	9.8	17.0	100.48
θ16	90	–	100	–	–	0	3.8	100

The above values are ideal values and are not guaranteed values.

Not recommend for new design

FUNCTION DESCRIPTION

2-phase excitation driving mode

By allowing a current of ±100% to flow into output ch1 and ch2 at the same time, a motor can be driven with the larger torque.

The two-phase excitation driving mode and microstep driving mode are switched by the MODE pin. In the two-phase excitation driving mode, the chopping pulse circuit does not operate.

Microstep driving of stepper motor

To position a stepper motor with high accuracy, the μPD168110 has a function to hold constant the current flowing through the H bridge by a vector value and to stop one cycle in 64 steps. To realize the microstep driving mode, the driver internally realizes the following functions.

- Detecting the current flowing into each channel as a voltage value by a sense resistor
- Synthesizing the dummy sine wave of the half-wave generated by the internal D/A and PWM oscillation wave for chopping operation
- The driver stage performs PWM driving based on the result of comparing the detected voltage value and synthesized waves.

  The internal dummy sine wave is of 64 steps per cycle, so that the stepper motor can be driven in 64 steps. The microstep driving mode and two-phase excitation driving mode are switched by an external pin.

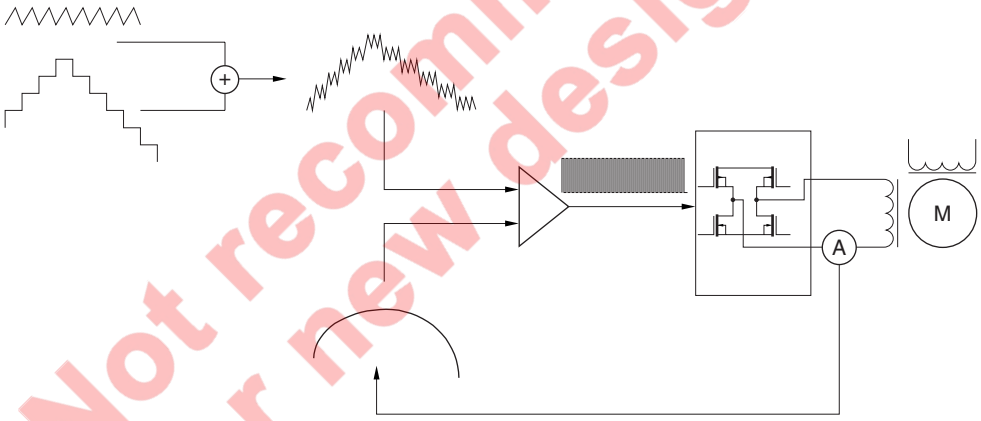

Concept of microstep driving operation

Not recommend for new design

MOB output

The MOB output pin outputs “L” if the current of ch1 or ch2 reaches ±100% in the microstep output mode, or if the current of ch 1 reaches +100%. In the two-phase excitation output mode, the MOB pin outputs “L” when the current of ch1 and ch2 reaches +100%. The excitation position of the stepper motor can be checked by monitoring the MOB output. The MOB output also indicates the stop position information in the stop mode to be explained below.

The MOB output goes into a Hi-Z state (output H level if pulled up) when OE = “L”.

Stop mode

If the stop mode is set by the STOP pin, the pulse is automatically output until MOB = “L” when CLK is input. If MOB = “L” in the stop mode, the pulse is not output even when CLK is input, and the output holds the excitation status.

To advance the pulse, release the stop mode and restore the normal mode.

Reset function

When RESET = “L”, initialization is executed and the output goes into a Hi-Z state. When RESET = “H”, excitation is started with the current of ch1 at +100% and the current of ch2 at 0% (one-phase excitation position). To perform two-phase excitation driving, excitation is started with the currents of ch1 and ch2 at +100% after the mode has been set. Be sure to execute a reset operation after power application. MOB outputs “L” until the pulse is output when RESET goes “L”.

Output enable (OE) pin

The pulse output can be forcibly stopped from an external source by using the OE pin. When OE = “L”, the output is forcibly made to go into a Hi-Z state.

Standby function

The μPD168110 can enter the standby mode when the pulse is not output and when PS = “H” and

STOP = “H”. In the standby mode, as many internal circuits as possible are stopped so that the self current consumption can be reduced. In the standby mode, the current consumption is 1 μA MAX. when external CLK input is stopped. While CLK is being input, the current consumption is reduced to 300 μA MAX. by the current flowing into the input buffer. The standby mode is released when PS = “L” and STOP = “L”.

Under voltage lockout circuit (UVLO)

This function is used to forcibly stop the operation of the IC to prevent malfunction of the circuits if V_{DD} of the IC drops during operation. Note that if the V_{DD} voltage abruptly drops in the order of μs, this function may not operate.

V_M pin current shutdown circuit

A circuit that prevents a current from flowing into the VM pin when V_{DD} = 0 V is provided. Therefore, the current flowing into the VM pin is cut off when V_{DD} = 0 V.

A current of up to 3 μA flows into the V_M pin when V_{DD} is applied so that the voltages on the V_{DD} and V_M pins can be monitored.

Not recommend for new design

OPERATION DESCRIPTION

- Setting output current

  The peak value of the output current (when current of ch 1 or ch 2 is 100%) is determined by the resistor R_{FB} that is connected to FB1 and FB2. This IC has an internal reference power supply V_{REF} (500 mV TYP.) for comparing current, and drives the stepper motor with the current value calculated by R_{FB} and V_{REF} as the peak output current value.

★ Peak output current value I_{MAX} (A) ≅ V_{REF} (V) ÷ R_{FB} (Ω) x Output detection ratio

- Pulse output

  The motor is driven by inputting a pulse to the CLK pin. The motor advances by one pulse at the rising edge of the CLK signal. When MODE = "H", the motor is driven in the 64-microstep driving mode, and the driving current of each step is determined based on the internal motor excitation position information and revolution direction. When MODE = "L", the two-phase excitation mode is selected, and the current direction (100% drive) of ch 1 and ch 2 are switched each time a pulse has been input.

- Setting motor revolution direction

  The revolution direction of the motor is set by CW. In the CW mode (CW = "L"), the current of ch2 is output, 90° degrees in phase behind the current of ch1. In the CCW mode (CW = "H"), the current of ch2 is output, 90° degrees in phase ahead of the current of ch1.

CW Pin	Operation Mode
L	CW mode (forward revolution)
H	CCW mode (reverse revolution)

- Setting stop mode (valid only in microstep driving mode)

  When STOP = "H", the motor advances to the position of MOB output = "L", and the output status is held.
  The excitation status is not changed even when a pulse is input to CLK while MOB = "L" when STOP = "H". The pulse can be advanced when STOP = "L".

STOP	Operation Mode
L	Normal mode
H	Stop mode

Caution If STOP = "L" before the stop mode is set (until MOB = "L"), the operation is performed in the same manner as in the normal mode.

Not recommend for new design

- **Power save mode (valid only in microstep driving mode)**

  When PS = “H” and STOP = “H”, the motor advances to the position of MOB output = “L” and then the output goes to a Hi-Z state.

  The internal circuitry is stopped as much as possible and the standby mode is set. The power save mode is released when PS = “L” and STOP = “L”.

STOP	Operation Mode
L	Normal mode
H	Power save mode (only when STOP = “H”)

Caution Inputting PS = “H” and STOP = “L” is prohibited.

- Setting output enable

  When OE = “H”, the motor is driven (output excitation status). Be sure to set OE to “H” to drive the motor.

STOP	Operation Mode
L	Output Hi-Z
H	Enable mode

- Selecting two-phase excitation/microstep driving mode

  The MODE pin can be used to select the two-phase excitation or microstep driving mode. When MODE = “H”, the microstep driving mode is selected. When MODE = “L”, the two-phase excitation mode (both ch 1 and ch 2 are driven at +100% or –100%) is selected. The μPD168110 is initialized immediately after a RESET operation, so excitation is started from the position at which the output current of ch 1 is 100% and the output current of ch 2 is 0% in the microstep driving mode, and from the position at which the output currents of both ch 1 and ch 2 are +100% in the two-phase excitation driving mode.

  If the mode is changed from the microstep to the two-phase, the position of the microstep mode is retained until CLK is input. When the first CLK is input, pulse output is started, the operation skips to the two-phase position of the next quadrant, and driving is started.

Not recommend for new design

MODE	Operation Mode
L	2-phase excitation
H	Microstep driving

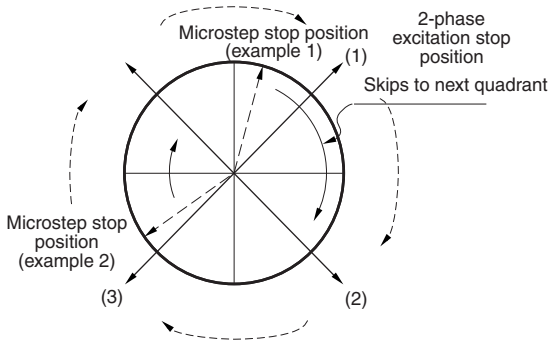

Concept of switching operation mode
from microstep to 2-phase excitation

- Selecting MOB output (in microstep driving mode only)

  The output function of MOB can be selected by MOBSEL. When MOBSEL = “L”, MOB is output at the position where the current of ch1 is +100% and the current of ch2 is 0%. When MOBSEL = “H”, MOB is output at the position where the current of ch1 or ch2 is ±100%.

MOBSEL	MOB Output
L	Current of ch1 is +100% and current of ch2 is 0% (1 pulse/cycle).
H	Current of ch1 or ch2 is ±100% (4 pulses/cycle).

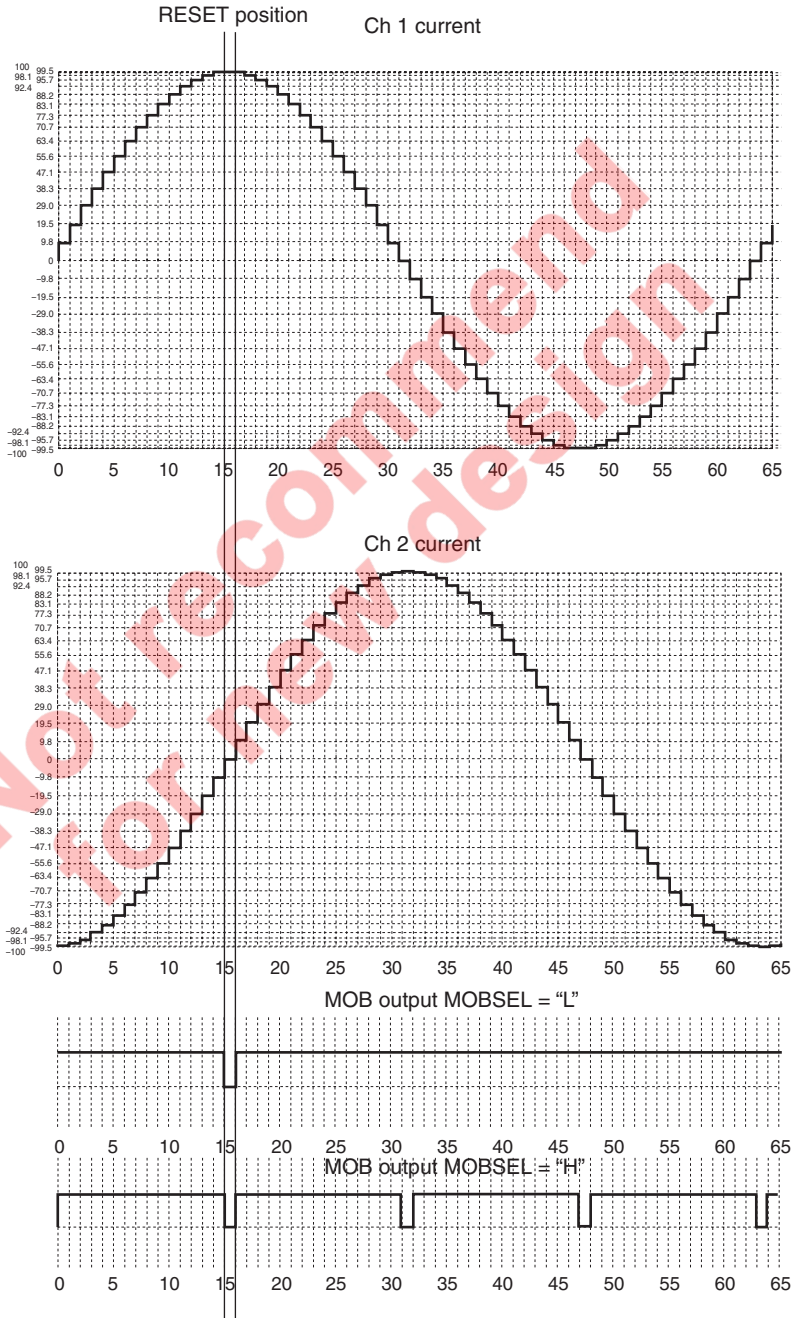

Not recommend for new design

ABSOLUTE MAXIMUM RATINGS

(T_A = 25°C: GLASS EPOXY BOARD OF 100 mm × 100 mm × 1 mm WITH C OPPER FOIL OF 15%)

Parameter	Symbol	Conditions	Rating	Unit
Power supply voltage	V_{DD}	Control block	–0.5 to +6.0	V
	V_M	Motor block	–0.5 to +6.0	
Input voltage	V_{IN}		–0.5 to V_{DD} +0.5	V
Output pin voltage	V_{OUT}		6.2	V
DC output current	$I_{D(DC)}$	DC	±0.4	A/ch
Instantaneous output current	$I_{D(pulse)}$	PW < 10 ms, Duty 20%	±0.7	A/ch
Power consumption	P_T		0.7	W
Peak junction temperature	$T_{CH(MAX)}$		150	°C
Storage temperature	T_{stg}		–55 to +150	°C

RECOMMENDED OPERATING CONDITIONS

(T_A = 25°C: GLASS EPOXY BOARD OF 100 mm × 100 mm × 1 mm WITH COPPER FOIL OF 15%)

Parameter	Symbol	Conditions	MIN.	TYP.	MAX.	Unit
Power supply voltage	V_{DD}	Control block	2.7		3.6	V
	V_M	Motor block	2.7		5.5	V
Input voltage	V_{IN}		0		V_{DD}	V
DC output current	$I_{D(DC)}$	DC	–0.35		+0.35	A/ch
Instantaneous output current	$I_{D(pulse)}$	PW < 10 ms, Duty ≤ 20%	–0.6		+0.6	A/ch
MOB pin output sink current	I_{MOB}	Open-drain output			5	mA
Operating temperature range	T_A		–10		75	°C

Not recommend for new design

ELECTRICAL CHARACTERISTICS (UNLESS OTHERWISE SPECIFIED, V_{DD} = V_M = 3 V, T_A = 25°C)

Parameter	Symbol	Conditions	MIN.	TYP.	MAX.	Unit
V_{DD} pin current after reset	$I_{DD(STB)}$	External CLK stopped			1.0	μA
V_{DD} pin current in standby mode	$I_{DD(STB2)}$	External CLK stopped			30	μA
	$I_{DD(STB3)}$	External CLK is input			300	μA
V_{DD} pin current during operation	$I_{DD(ACT)}$				3.0	mA
VM pin current	$I_{M(OFF)}$	V_M = 5.5 V per V_M pin, after reset and in standby mode			3.0	μA
High-level input current	I_{IH}	V_{IN} = V_{DD}			1.0	μA
Low-level input current	I_{IL}	V_{IN} = 0 V	−1.0			μA
High-level input voltage	V_{IH}	2.7 V ≤ V_{DD} ≤ 3.6 V	0.7 x V_{DD}			V
Low-level input voltage	V_{IL}	2.7 V ≤ V_{DD} ≤ 3.6 V			0.3 x V_{DD}	V
Input hysteresis voltage	V_{hys}			0.3		V
H bridge on-resistance	R_{ON}	I_M = 0.35 A, sum of upper and lower stages, FB1 = FB2 = 0 V			2.0	Ω
Output turn-on time	t_{ON}	R_M = 20 Ω OE pin ↑ → output SW time	0.02		0.5	μs
Output turn-off time	t_{OFF}		0.02		0.5	μs
Internal reference voltage	V_{REF}		450	500	550	mV
★ Output detection ratio		I_M = 0.1 A, with 5 kΩ sense resistor connected	950	1050	1150	

Cautions 1. The undervoltage lockout detection circuit (UVLO) operates at 1.7 V TYP. whereupon the output goes into a Hi-Z state. Internal data such as the excitation position information is reset. The UVLO circuit does not operate after reset.

2. A shutdown circuit that prevents a current from flowing into the V_M pin when V_{DD} = 0 V is provided.

Not recommend for new design

PACKAGE DRAWING

24-PIN PLASTIC TSSOP (5.72 mm (225))

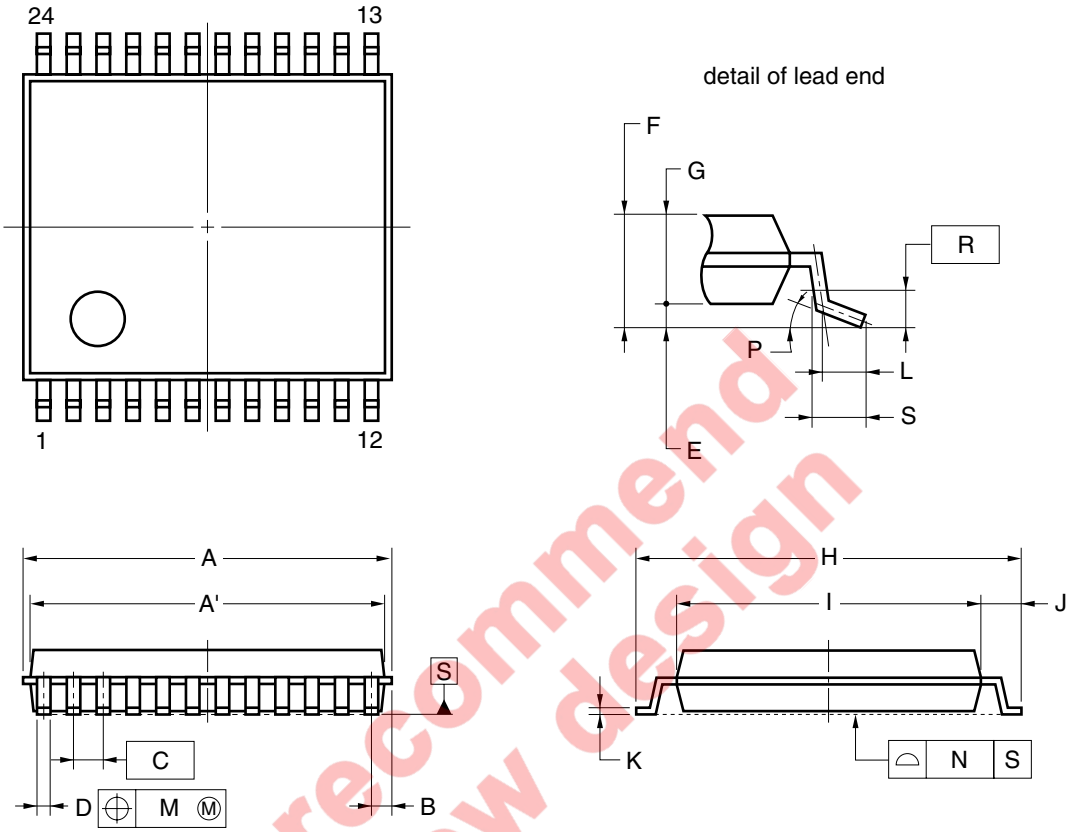

Not recommend for new design

NOTE

Each lead centerline is located within 0.10 mm of its true position (T.P.) at maximum material condition.

ITEM	MILLIMETERS
A	6.65±0.10
A'	6.5±0.1
B	0.575
C	0.5 (T.P.)
D	0.22±0.05
E	0.1±0.05
F	1.2 MAX.
G	1.0±0.05
H	6.4±0.1
I	4.4±0.1
J	1.0±0.1
K	0.17±0.025
L	0.5
M	0.10
N	0.08
P	$3^{\circ}{}^{+5^{\circ}}_{-3^{\circ}}$
R	0.25
S	0.6±0.15

P24MA-50-6A5

RECOMMENDED SOLDERING CONDITIONS

The μPD168110 should be soldered and mounted under the following recommended conditions.

For soldering methods and conditions other than those recommended below, contact an NEC Electronics sales representative.

For technical information, see the following website.

Semiconductor Device Mount Manual (http://www.necel.com/pkg/en/mount/index.html)

Recommended Soldering Conditions for Surface Mounting Type

μPD168110MA-6A5 24pin TSSOP

Soldering Method	Soldering Conditions	Recommended Condition Symbol
Infrared reflow	Package peak temperature: 260°C, Time: 60 seconds max. (at 220°C or higher), Count: Three times or less, Exposure limit: None, Flux: Rosin flux with low chlorine (0.2 Wt% or below) recommended	IR60-00-3

Caution Do not use different soldering methods together (except for partial heating).

Not recommend for new design

- **The information in this document is current as of June, 2005. The information is subject to change without notice. For actual design-in, refer to the latest publications of NEC Electronics data sheets or data books, etc., for the most up-to-date specifications of NEC Electronics products. Not all products and/or types are available in every country. Please check with an NEC Electronics sales representative for availability and additional information.**
- No part of this document may be copied or reproduced in any form or by any means without the prior written consent of NEC Electronics. NEC Electronics assumes no responsibility for any errors that may appear in this document.
- NEC Electronics does not assume any liability for infringement of patents, copyrights or other intellectual property rights of third parties by or arising from the use of NEC Electronics products listed in this document or any other liability arising from the use of such products. No license, express, implied or otherwise, is granted under any patents, copyrights or other intellectual property rights of NEC Electronics or others.
- Descriptions of circuits, software and other related information in this document are provided for illustrative purposes in semiconductor product operation and application examples. The incorporation of these circuits, software and information in the design of a customer's equipment shall be done under the full responsibility of the customer. NEC Electronics assumes no responsibility for any losses incurred by customers or third parties arising from the use of these circuits, software and information.
- While NEC Electronics endeavors to enhance the quality, reliability and safety of NEC Electronics products, customers agree and acknowledge that the possibility of defects thereof cannot be eliminated entirely. To minimize risks of damage to property or injury (including death) to persons arising from defects in NEC Electronics products, customers must incorporate sufficient safety measures in their design, such as redundancy, fire-containment and anti-failure features.
- NEC Electronics products are classified into the following three quality grades: "Standard", "Special" and "Specific".
  The "Specific" quality grade applies only to NEC Electronics products developed based on a customer-designated "quality assurance program" for a specific application. The recommended applications of an NEC Electronics product depend on its quality grade, as indicated below. Customers must check the quality grade of each NEC Electronics product before using it in a particular application.
  "Standard": Computers, office equipment, communications equipment, test and measurement equipment, audio and visual equipment, home electronic appliances, machine tools, personal electronic equipment and industrial robots.
  "Special": Transportation equipment (automobiles, trains, ships, etc.), traffic control systems, anti-disaster systems, anti-crime systems, safety equipment and medical equipment (not specifically designed for life support).
  "Specific": Aircraft, aerospace equipment, submersible repeaters, nuclear reactor control systems, life support systems and medical equipment for life support, etc.

The quality grade of NEC Electronics products is "Standard" unless otherwise expressly specified in NEC Electronics data sheets or data books, etc. If customers wish to use NEC Electronics products in applications not intended by NEC Electronics, they must contact an NEC Electronics sales representative in advance to determine NEC Electronics' willingness to support a given application.

(Note)
(1) "NEC Electronics" as used in this statement means NEC Electronics Corporation and also includes its majority-owned subsidiaries.
(2) "NEC Electronics products" means any product developed or manufactured by or for NEC Electronics (as defined above).

Not recommend for new design