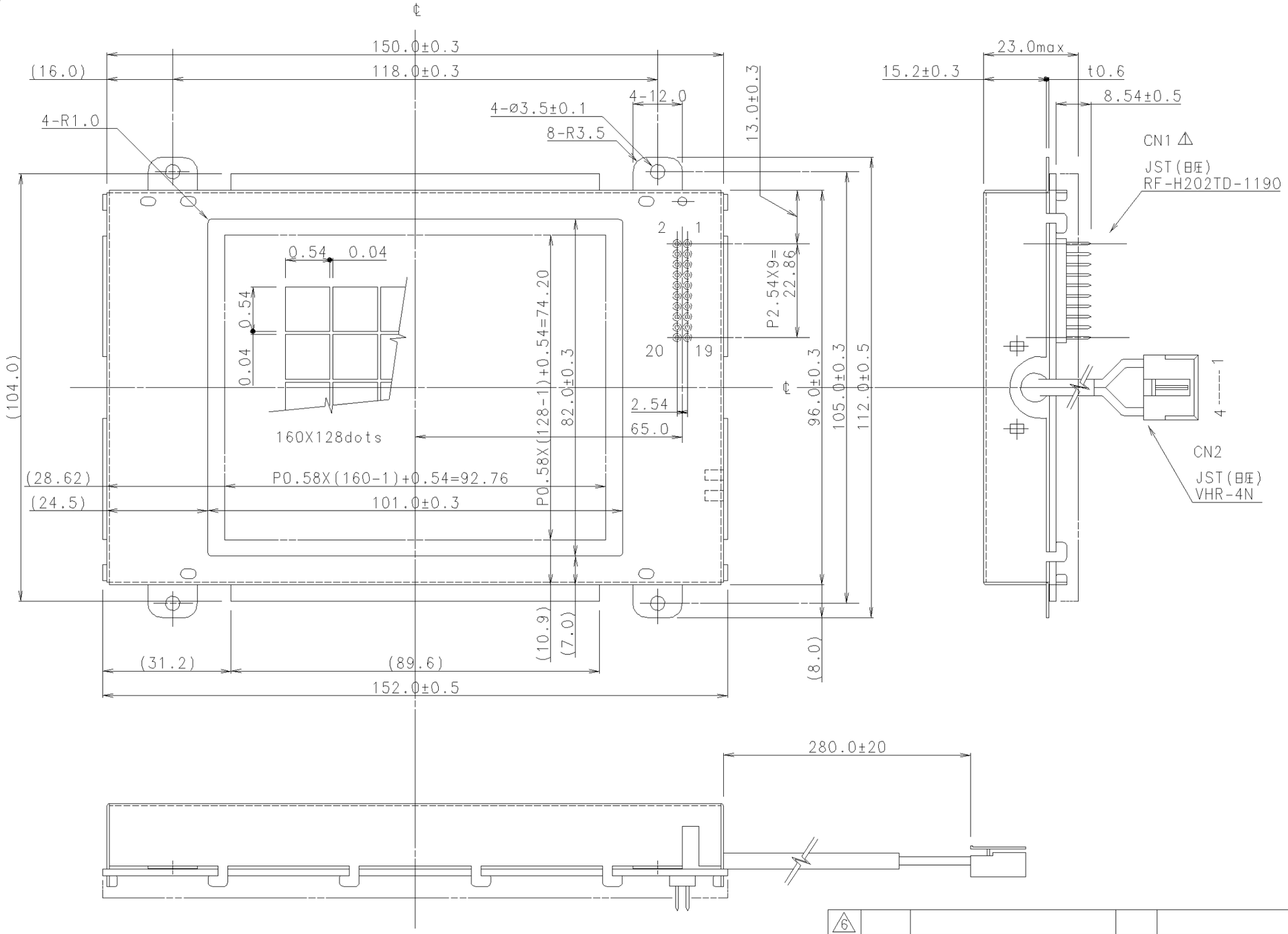

PIN ASSIGNMENT

CN1

PIN No.	SYMBOL
1	FG(Vss)
2	Vss
3	Vcc
4	V ADJ
5	V EE
6	$\overline{WR}$
7	$\overline{RD}$
8	$\overline{CE}$
9	C/$\overline{D}$ ⚠
10	$\overline{HALT}$
11	$\overline{RESET}$
12	D 0
13	D 1
14	D 2
15	D 3
16	D 4
17	D 5
18	D 6
19	D 7
20	NC

CN2

PIN No.	SYMBOL
1	CFL(GND) ⚠
2	NC
3	NC
4	CFL(HOT) ⚠

TOLERANCE				
MEASURE	A	B	C	
l≤16	±0.1	±0.3	±1	
16<l≤63	±0.2	±0.5	±1.5	
63<l≤250	±0.3	±0.8	±2	
250<l≤500	±0.5	±1.2	±3	ANGLE
500<l≤1000	±0.8	±2	±4	±30' ±1° ±2°

ISSUE	DATE	REVISIONS	NAME
6			
5			
4			
3			
2			
1	NOV.09'93	誤記訂正	村上

OPTREX CORPORATION

MATERIAL	FINISH	Q'ty	NOTE
3rd ANGLE PROJECTION	TOLERANCE CLASS: B	SCALE: 1:1	
APPROVED _____	MODEL DMF-5003 CFL Series		
CHECKED _____	TITLE DIMENSIONAL OUTLINE		
DRAWN OCT.7'92 S.KUWABARA	CODE		
DESIGNED JAN.12'93 T.OKA	DRAWING No. UE 34607A		