N and P-Channel Enhancement Mode Power MOSFET

Description

The HM4611 uses advanced trench technology to provide excellent $R_{DS(ON)}$ and low gate charge . It can be used in a wide variety of applications.

General Features

- **N-Channel**
  - V_{DS} = 60V,I_D =4.5A
  - $R_{DS(ON)}$ < 45mΩ @ V_{GS}=10V (Typ:38mÝ)
  - $R_{DS(ON)}$ < 77mΩ @ V_{GS}=4.5V (Typ:55mÝ)
- **P-Channel**
  - V_{DS} = -55V,I_D = -5A
  - $R_{DS(ON)}$ < 80mΩ @ V_{GS}=-10V

- High density cell design for ultra low Rdson
- Fully characterized Avalanche voltage and current
- Low Gate to Drain Charge to Reduce Switching Losses

Application

- Power switching application
- Hard switched and high frequency circuits
- DC-DC Converter

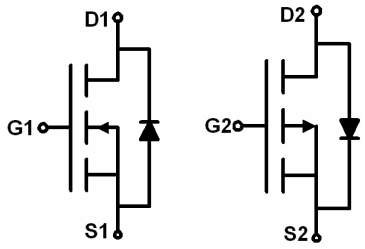

N-channel **P-channel**

Schematic diagram

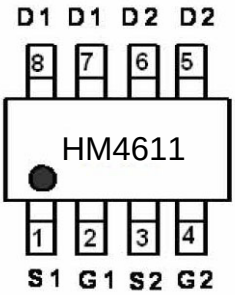

Marking and pin assignment

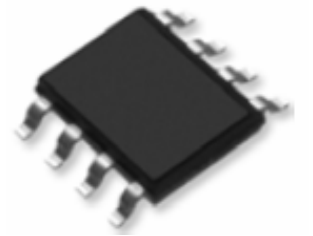

SOP-8 t op view

Package Marking and Ordering Information

Device Marking	Device	Device Package	Reel Size	Tape width	Quantity
HM4611	HM4611	SOP-8	Ø330mm	12mm	2500 units

Absolute Maximum Ratings (T_A=25℃unless otherwise noted)

Parameter	Symbol	N-Channel	P-Channel	Unit
Drain-Source Voltage	V_{DS}	60	-55	V
Gate-Source Voltage	V_{GS}	±20	±20	V
Continuous Drain Current	I_D	4.5	-5	A
Pulsed Drain Current (Note 1)	I_{DM}	20	-25	A
Maximum Power Dissipation	P_D	2	3	W
Operating Junction and Storage Temperature Range	T_J,T_{STG}	-55 To 150	-55 To 150	℃

Thermal Characteristic

Thermal Resistance,Junction-to-Ambient (Note2)	$R_{\theta JA}$	N-Ch	62.5	℃/W
		P-Ch	42	

N-CH Electrical Characteristics (T_A=25℃unless otherwise noted)

Parameter	Symbol	Condition	Min	Typ	Max	Unit
Off Characteristics						
Drain-Source Breakdown Voltage	BV_{DSS}	V_{GS}=0V I_D=250μA	60	69	-	V
Zero Gate Voltage Drain Current	I_{DSS}	V_{DS}=60V,V_{GS}=0V	-	-	1	μA
Gate-Body Leakage Current	I_{GSS}	V_{GS}=±20V,V_{DS}=0V	-	-	±100	nA
On Characteristics (Note 3)						
Gate Threshold Voltage	$V_{GS(th)}$	V_{DS}=V_{GS},I_D=250μA	1	2	3	V
Drain-Source On-State Resistance	$R_{DS(ON)}$	V_{GS}=10V, I_D=4.5A		38	45	
		V_{GS}=4.5V, I_D=3A	-	55	77	mΩ
Forward Transconductance	g_{FS}	V_{DS}=5V,I_D=4.5A	11	-	-	S
Dynamic Characteristics (Note4)						
Input Capacitance	C_{Iss}	V_{DS}=25V,V_{GS}=0V, F=1.0MHz		450		PF
Output Capacitance	C_{oss}			60		PF
Reverse Transfer Capacitance	C_{rss}			25		PF
Switching Characteristics (Note 4)						
Turn-on Delay Time	$t_{d(on)}$	V_{Ds}=30V,I_D=4.5A V_{GS}=10V,R_{GEN}=3Ω	-	4.7	-	nS
Turn-on Rise Time	t_r		-	2.3	-	nS
Turn-Off Delay Time	$t_{d(off)}$		-	15.7	-	nS
Turn-Off Fall Time	t_f		-	1.9	-	nS
Total Gate Charge	Q_g	V_{DS}=30V,I_D=4.5A, V_{GS}=10V	-	8.5	-	nC
Gate-Source Charge	Q_{gs}		-	1.6	-	nC
Gate-Drain Charge	Q_{gd}		-	2.2	-	nC
Drain-Source Diode Characteristics						
Diode Forward Voltage (Note 3)	V_{SD}	V_{GS}=0V,I_S=3.7A	-	-	1.2	V
Diode Forward Current (Note 2)	I_S		-	-	4	A

P-CH Electrical Characteristics (T_A=25℃unless otherwise noted)

Parameter	Symbol	Condition	Min	Typ	Max	Unit
Off Characteristics						
Drain-Source Breakdown Voltage	BV_{DSS}	V_{GS}=0V I_D=-250μA	-55	-	-	V
Zero Gate Voltage Drain Current	I_{DSS}	V_{DS}=-55V,V_{GS}=0V	-	-	1	μA
Gate-Body Leakage Current	I_{GSS}	V_{GS}=±20V,V_{DS}=0V	-	-	±100	nA
On Characteristics (Note 3)						
Gate Threshold Voltage	$V_{GS(th)}$	V_{DS}=V_{GS},I_D=-250μA	-1.5	-2.6	-3.5	V
Drain-Source On-State Resistance	$R_{DS(ON)}$	V_{GS}=-10V, I_D=-5A	-	64	80	mΩ
Forward Transconductance	g_{FS}	V_{DS}=-15V,I_D=-5A	16	-	-	S
Dynamic Characteristics (Note4)						
Input Capacitance	C_{Iss}	V_{DS}=-20V,V_{GS}=0V, F=1.0MHz	-	1450	-	PF
Output Capacitance	C_{oss}		-	145	-	PF
Reverse Transfer Capacitance	C_{rss}		-	110	-	PF
Switching Characteristics (Note 4)						
Turn-on Delay Time	$t_{d(on)}$	V_{DD}=-30V, ,R_L=30Ω V_{GS}=-10V,R_{GEN}=6Ω	-	8	-	nS
Turn-on Rise Time	t_r		-	9	-	nS
Turn-Off Delay Time	$t_{d(off)}$		-	65	-	nS
Turn-Off Fall Time	t_f		-	30	-	nS
Total Gate Charge	Q_g	V_{DS}=-30V,I_D=-5A, V_{GS}=-10V	-	26	-	nC
Gate-Source Charge	Q_{gs}		-	4.5	-	nC
Gate-Drain Charge	Q_{gd}		-	7	-	nC
Drain-Source Diode Characteristics						
Diode Forward Voltage (Note 3)	V_{SD}	V_{GS}=0V,I_S=-3A	-	-	1.2	V
Diode Forward Current (Note 2)	I_S		-	-	-5	A

Notes:

1. Repetitive Rating: Pulse width limited by maximum junction temperature.
2. Surface Mounted on FR4 Board, t ≤ 10 sec.
3. Pulse Test: Pulse Width ≤ 300μs, Duty Cycle ≤ 2%.
4. Guaranteed by design, not subject to production

N- Channel Typical Electrical and Thermal Characteristics (Curves)

Test circuit

1）E_{AS} test Circuits

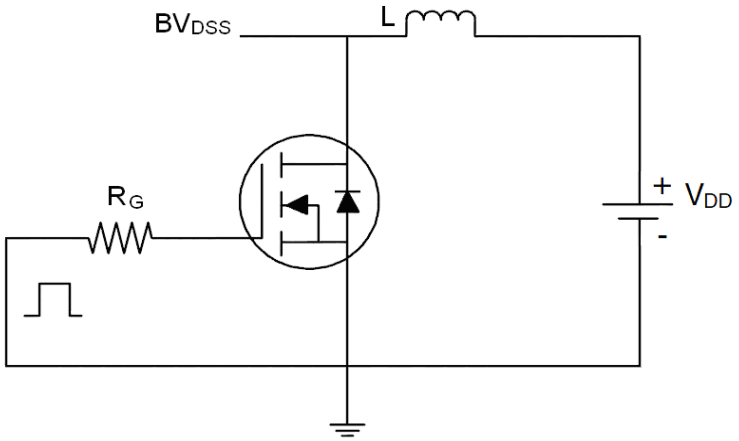

2）Gate charge test Circuit:

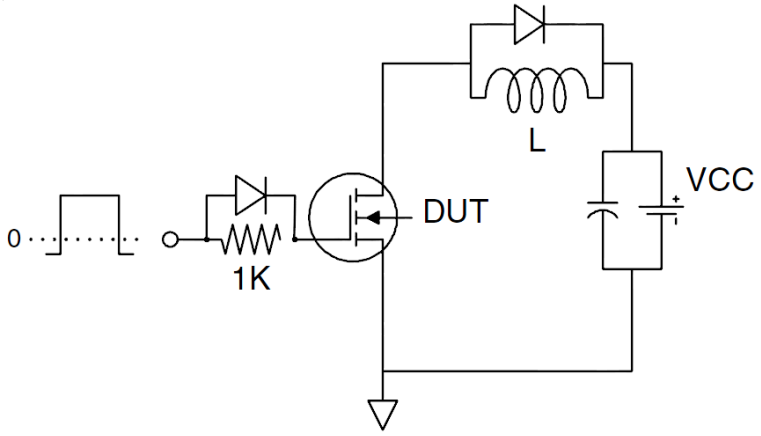

3）Switch Time Test Circuit:

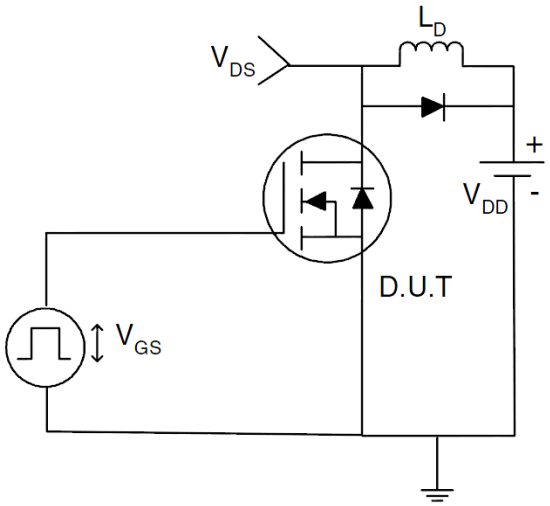

TYPICAL ELECTRICAL AND THERMAL CHARACTERISTICS (Curves)

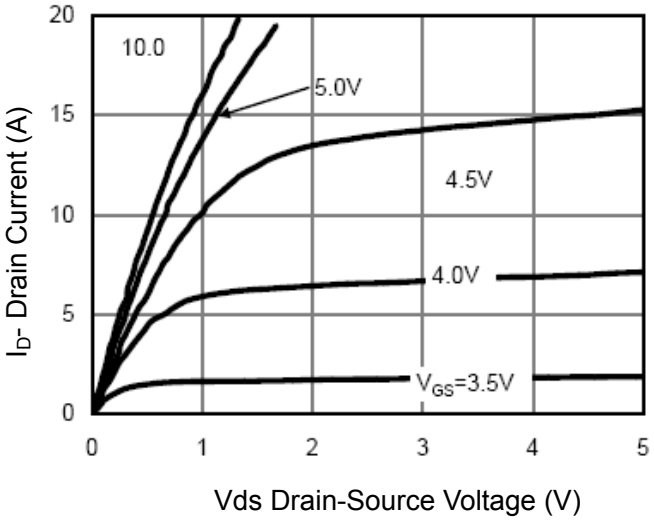

Figure 1 Output Characteristics

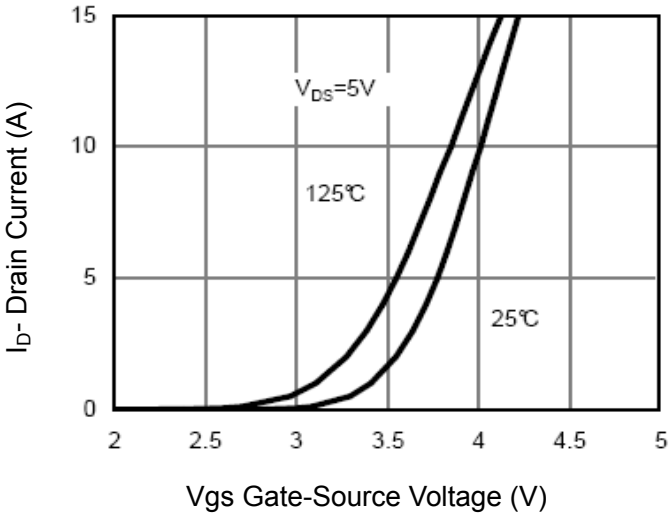

Figure 2 Transfer Characteristics

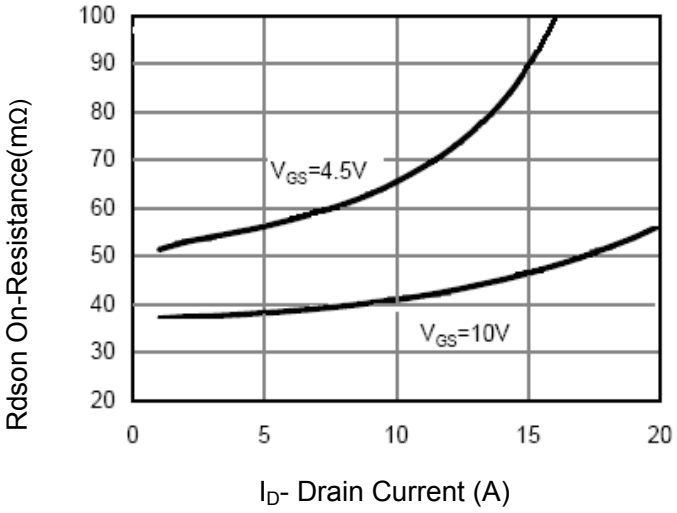

Figure 3 Rdson- Drain Current

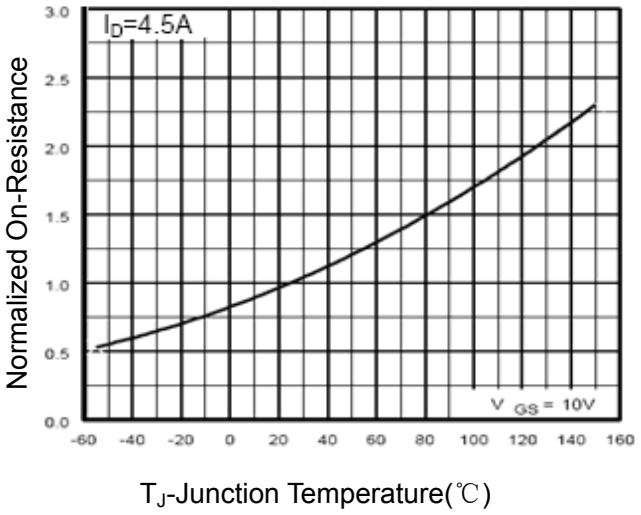

Figure 4 Rdson-JunctionTemperature

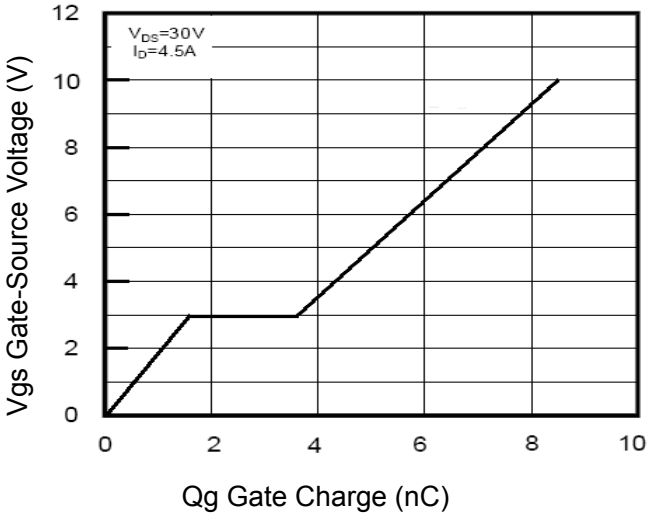

Figure 5 Gate Charge

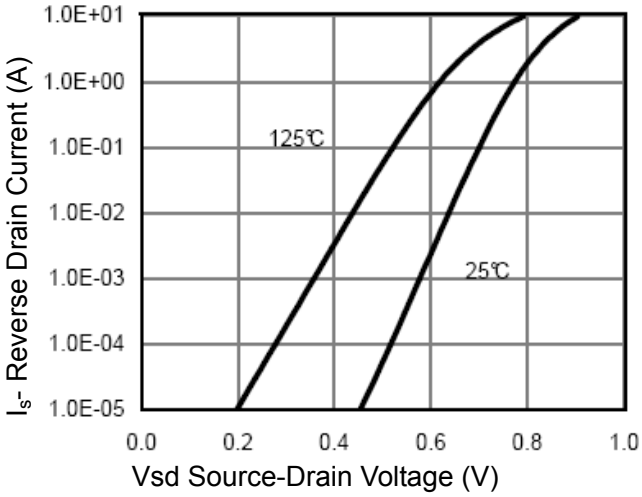

Figure 6 Source- Drain Diode Forward

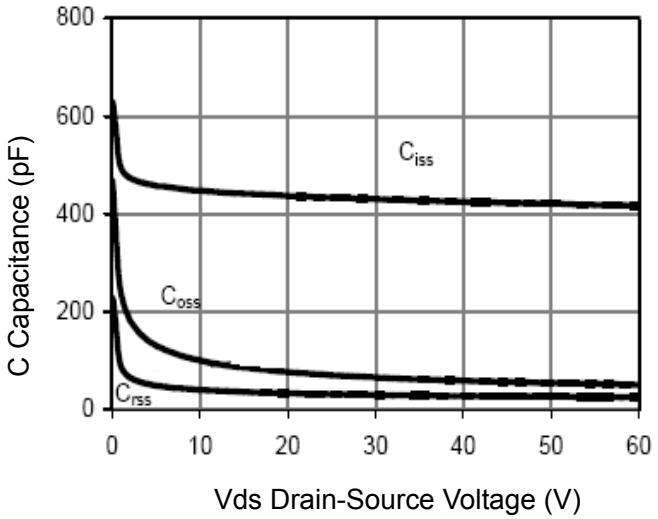

Figure 7 Capacitance vs Vds

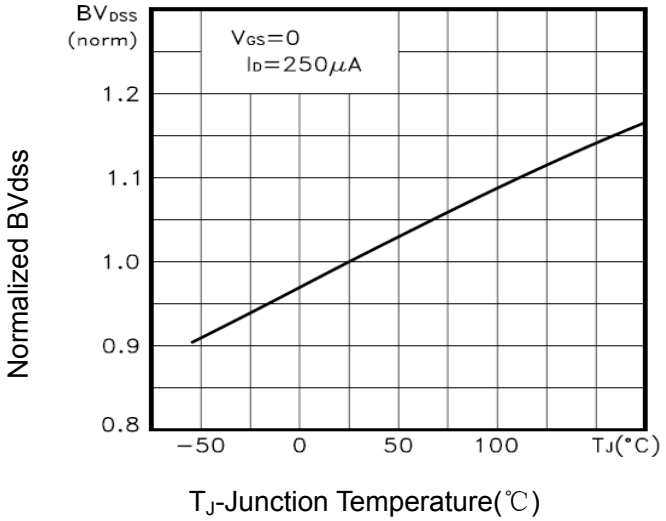

Figure 9 BV_{DSS} vs Junction Temperature

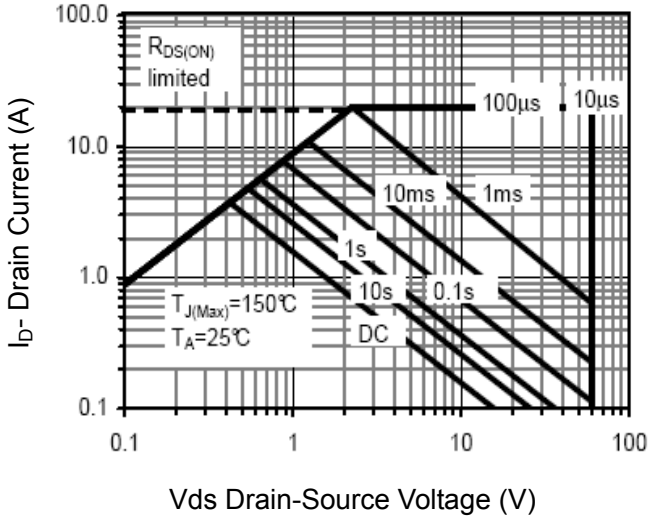

Figure 8 Safe Operation Area

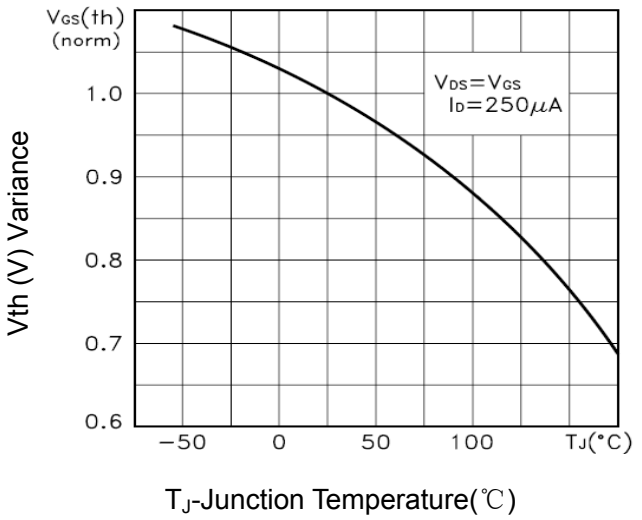

Figure 10 $V_{GS(th)}$ vs Junction Temperature

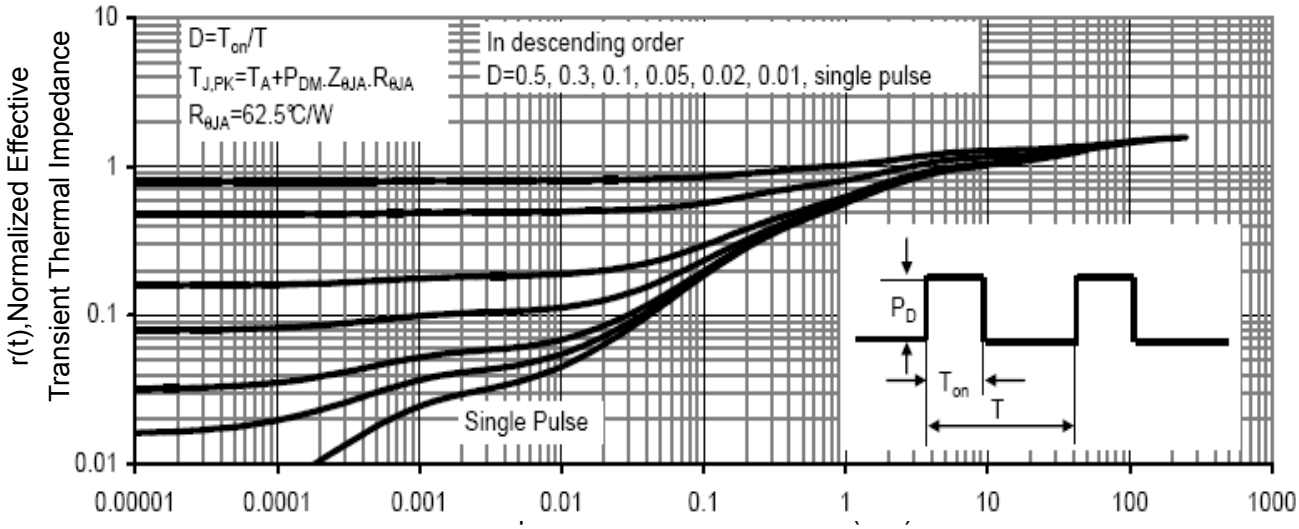

Figure 11 Normalized Maximum Transient Thermal Impedance

P-Channel Typical Electrical and Thermal Characteristics

Test Circuit

1) E_{AS} Test Circuit

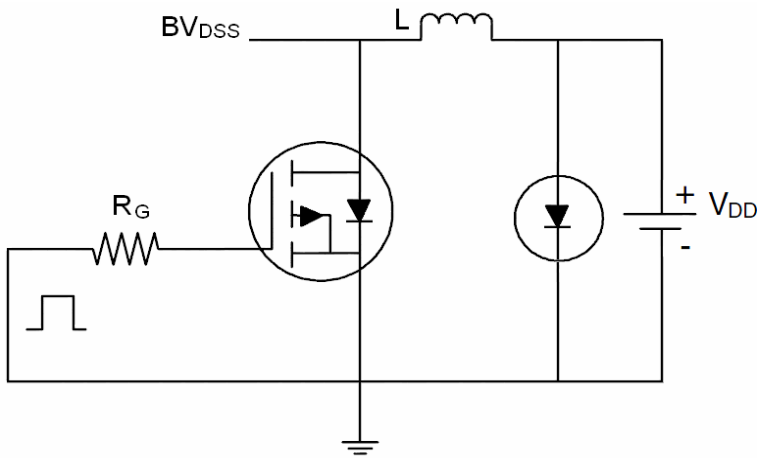

2) Gate Charge Test Circuit

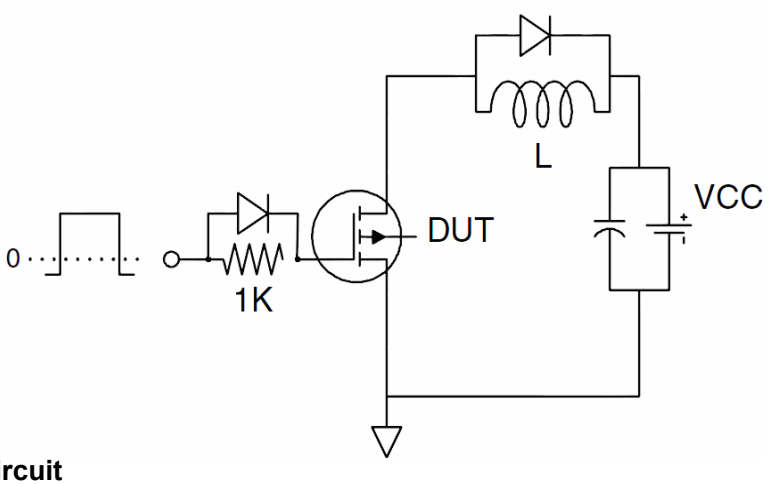

3) Switch Time Test Circuit

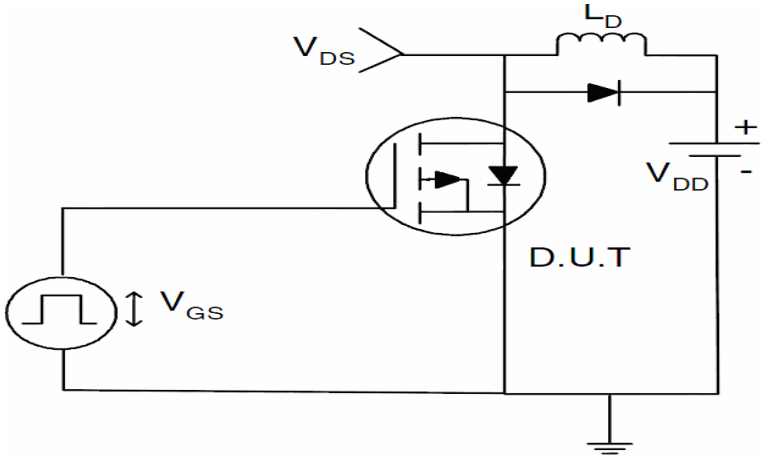

Typical Electrical and Thermal Characteristics (Curves)

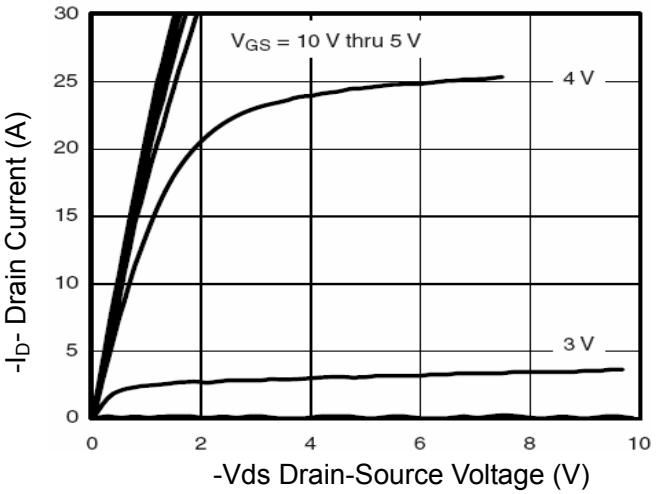

Figure 1 Output Characteristics

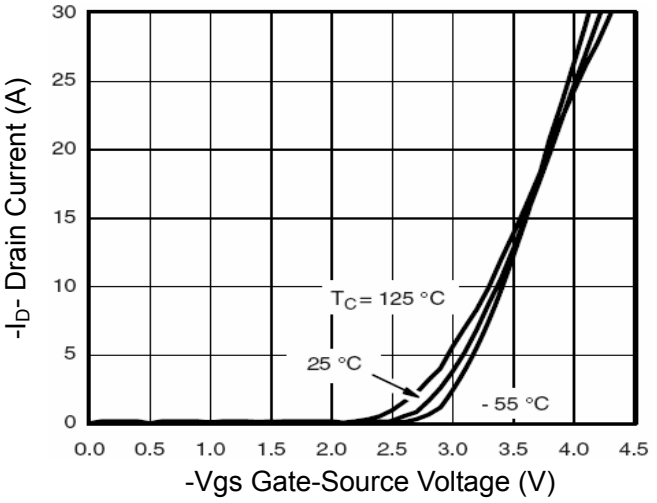

Figure 2 Transfer Characteristics

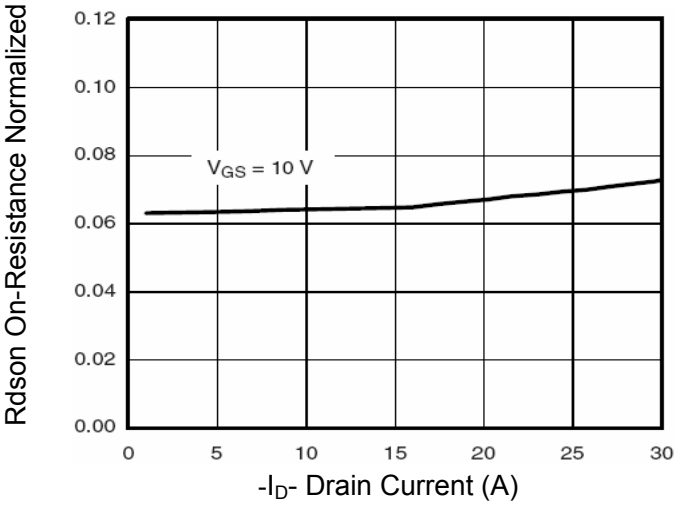

Figure 3 Rdson- Drain Current

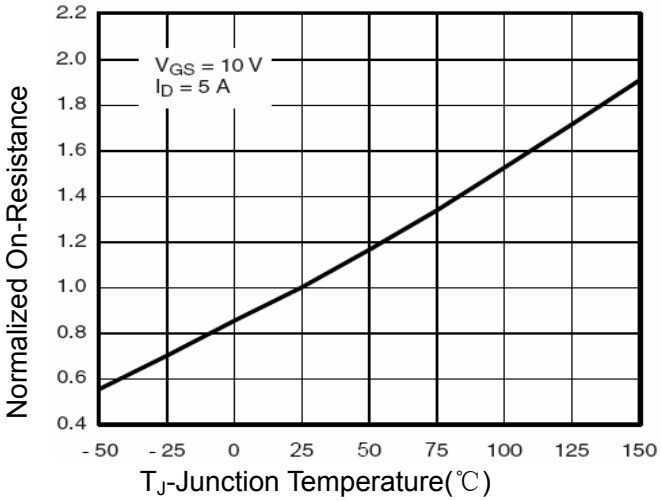

Figure 4 Rdson-Junction Temperature

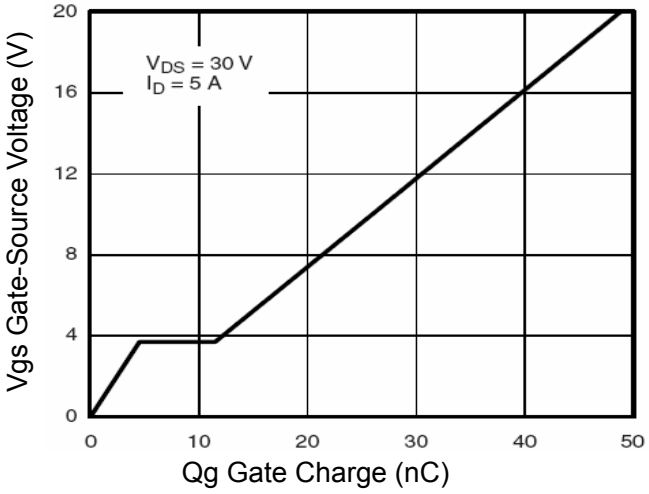

Figure 5 Gate Charge

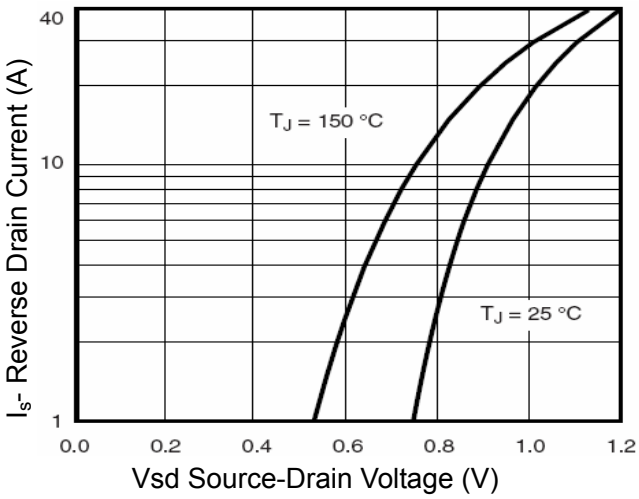

Figure 6 Source- Drain Diode Forward

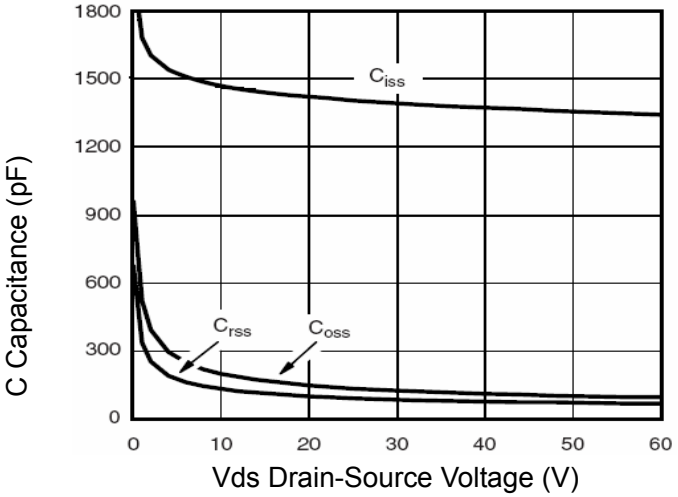

Figure 7 Capacitance vs Vds

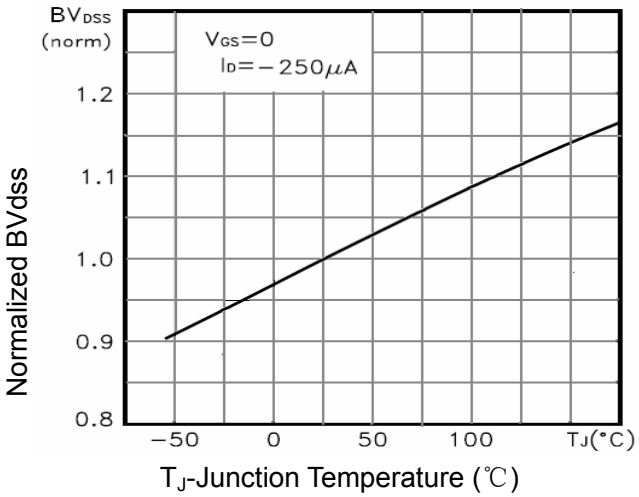

Figure 9 BV_{DSS} vs Junction Temperature

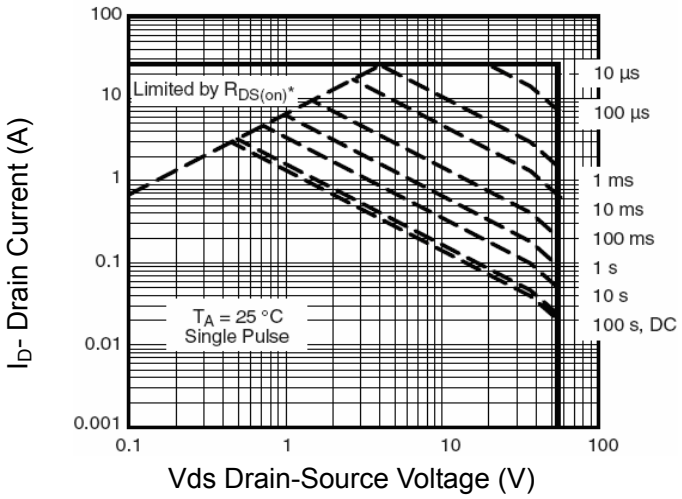

Figure 8 Safe Operation Area

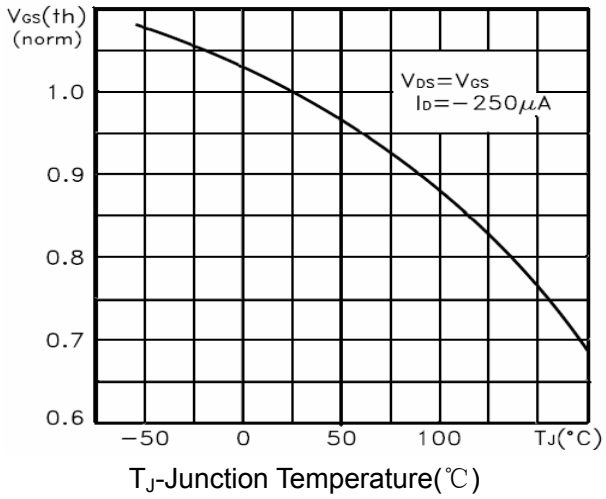

Figure 10 $V_{GS(th)}$ vs Junction Temperature

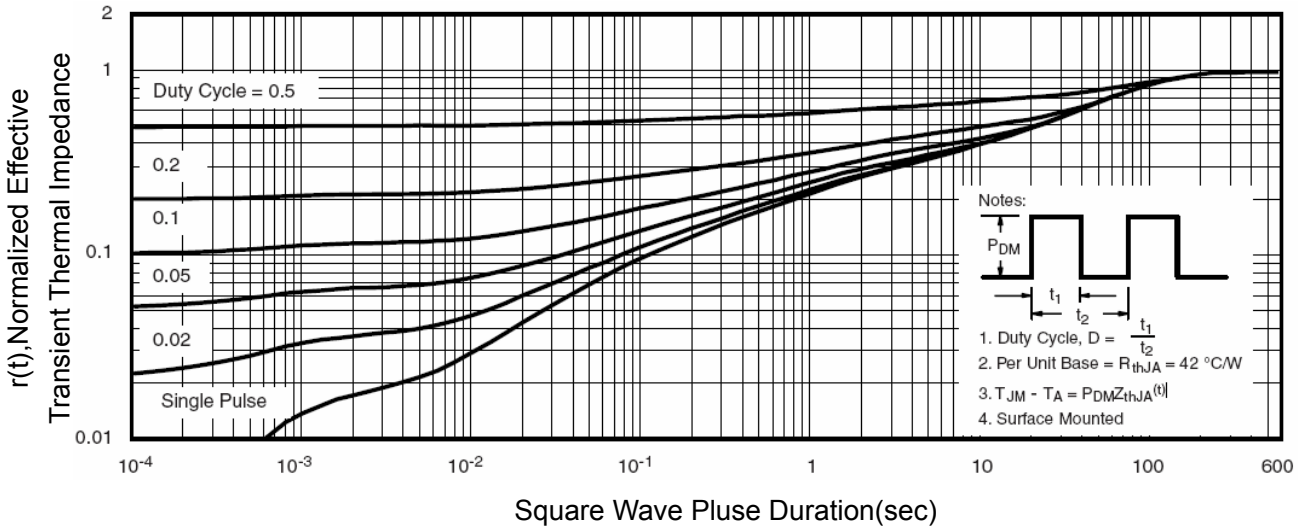

Figure 11 Normalized Maximum Transient Thermal Impedance

SOP-8 Package Information

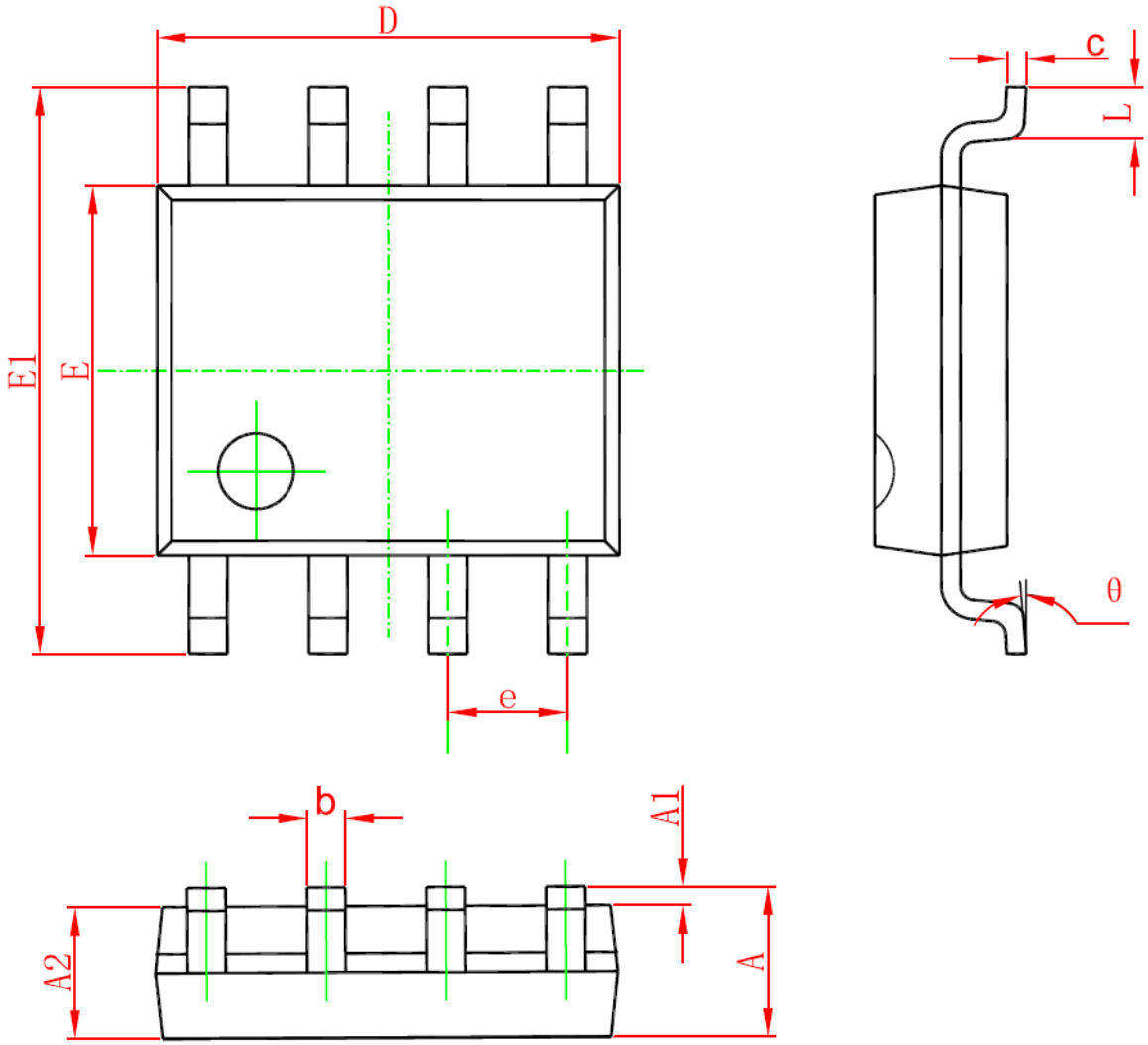

Symbol	Dimensions In Millimeters		Dimensions In Inches	
	Min	Max	Min	Max
A	1.350	1.750	0.053	0.069
A1	0.100	0.250	0.004	0.010
A2	1.350	1.550	0.053	0.061
b	0.330	0.510	0.013	0.020
c	0.170	0.250	0.006	0.010
D	4.700	5.100	0.185	0.200
E	3.800	4.000	0.150	0.157
E1	5.800	6.200	0.228	0.244
e	1.270(BSC)		0.050(BSC)	
L	0.400	1.270	0.016	0.050
θ	0°	8°	0°	8°