Dual Direction Blocking Load Switch for Battery Charger

■ Description

The XT5856 is a dual direction blocking switch for battery charge. The forward blocking voltage is 20Vand reverse blocking voltage is 7V, under the rated voltage, the leakage current is very low even at high temperature.

This device is in a very small package (TSOT23-6L), the continuous turn-on current can up to 1.5A, it is suitable in USB3.0 charger.

■ Features

- Integrated reverse blocking diode
- Ultra low voltage drop
- Extrme low leakage current on dual
- Direction blocking

■ Package

- **TSOT-23-6L**

Simplified Outlin

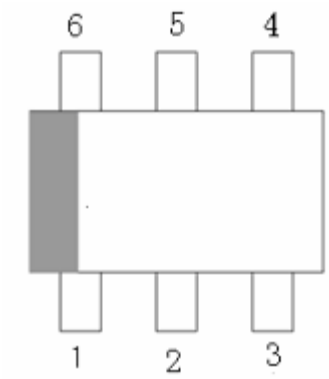

Symbol

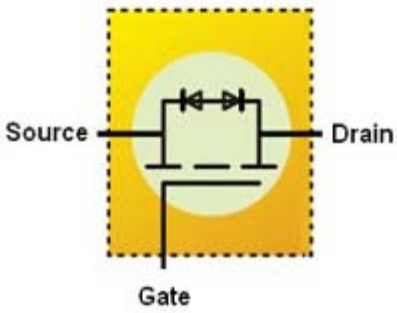

■ Pin Assignment

Pin Number	Description
1	Gate(G)
2,5	Drain (D)
6	Source(S)

■ Absolute Maximum Ratings

(TA=25℃ unless otherwise noted)

Parameter	Symbol	Ratings	Unit
Source to Drain Blocking Voltage	V_{SD}	20	V
Drain to Source Blocking Voltage	V_{DS}	7	V
Source to Drain Current	I_{SD}	1.5	A
Gate to Source Voltage	V_{GS}	±8	V

■ Thermal Data

Parameter	Symbol	Ratings	Unit
Maximum junction temperature	T_{JMAX}	150	℃
Operating junction temperature	T_J	-40~150	℃
Storage temperature	T_{STG}	-50~150	℃
Max. Thermal Resistance, Junction to ambient	R_{THJA}	125	℃/W
Power Dissipation	P_{TOT}	0.8	W

■ Electrical Characteristics

(TA=25℃ unless otherwise noted)

Parameter	Symbol	Test Condition	Min	Typ	Max	Unit
OFF Characteristics						
Source to Drain BV	BV_{SD}	V_{GS}=0V,I_{SD}=50μA	20	—	—	V
Drain to Source BV	BV_{DS}	V_{GD}=0V,I_{DS}=50μA	7	—	—	V
Drain-Source On-State Resistance	R_{DSON}	V_{GS}=-4.5V,I_D=-2A	—	—	180	mΩ
		V_{GS}=-3V,I_D=-1A	—	—	500	mΩ
Source to Drain Leakage	I_{LSD}	V_{GS}=0V,V_{SD}=16V	—	—	1	μA
Drain to Source Leakage	I_{LDS}	V_{GD}=0V,V_{DS}=5V	—	—	1	μA
		@125℃	—	0.1	—	μA
Gate Leakage	I_{GSS}	VGS=±8V	—	—	±100	nA
ON Characteristics						
Gate threshold voltage	$V_{GS(th)}$	V_{SG}=V_{SD}, I_S=250μA	-0.6	-1	-1.5	V
Voltage Drop	V_{DROP}	V_{GS}=-4.5V, I_S=0.5A		80	100	mV
Voltage Drop	V_{DROP}	V_{GS}=-3V, I_S=0.5A		160	200	mV

■ Application circuit and function description

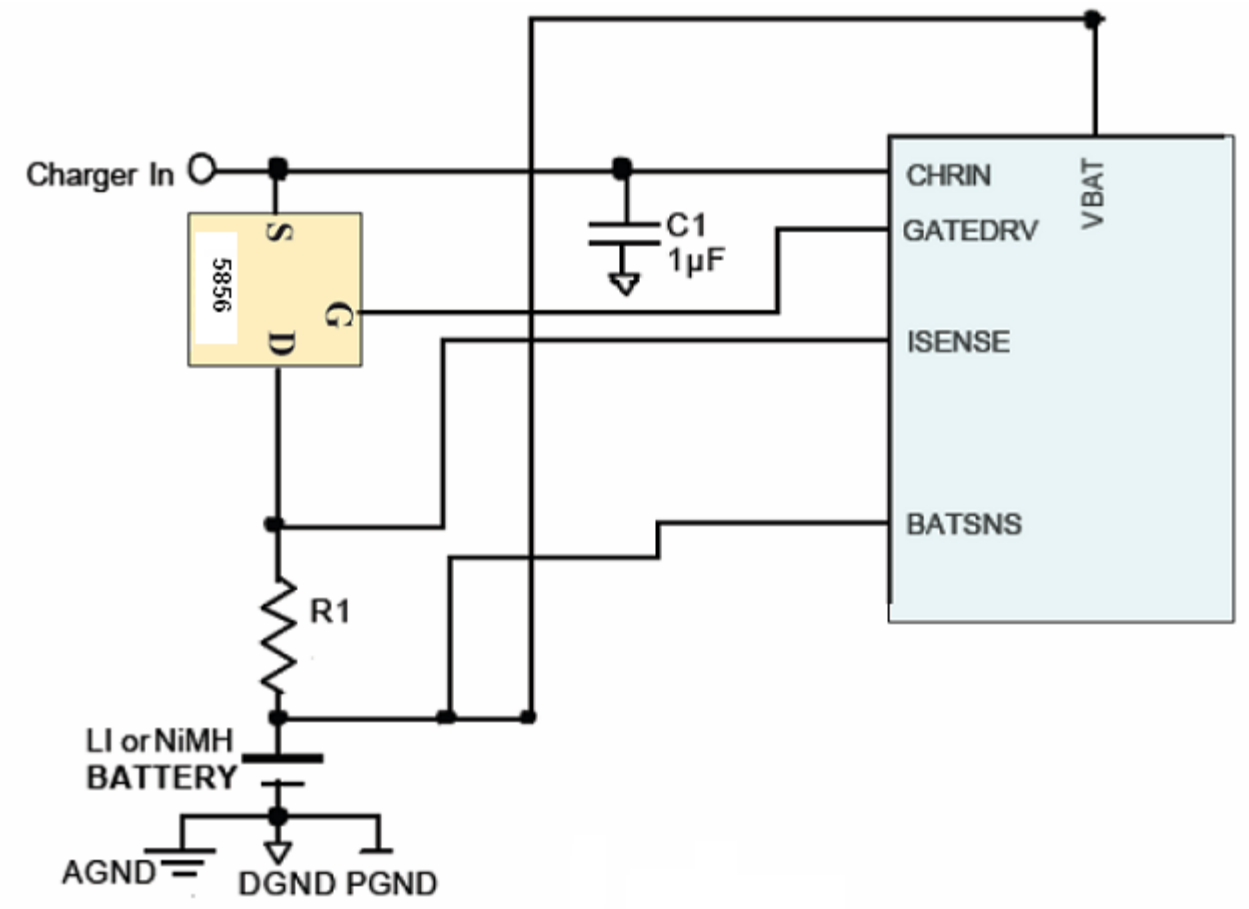

■ Package Information

- **TSOT23-6L**

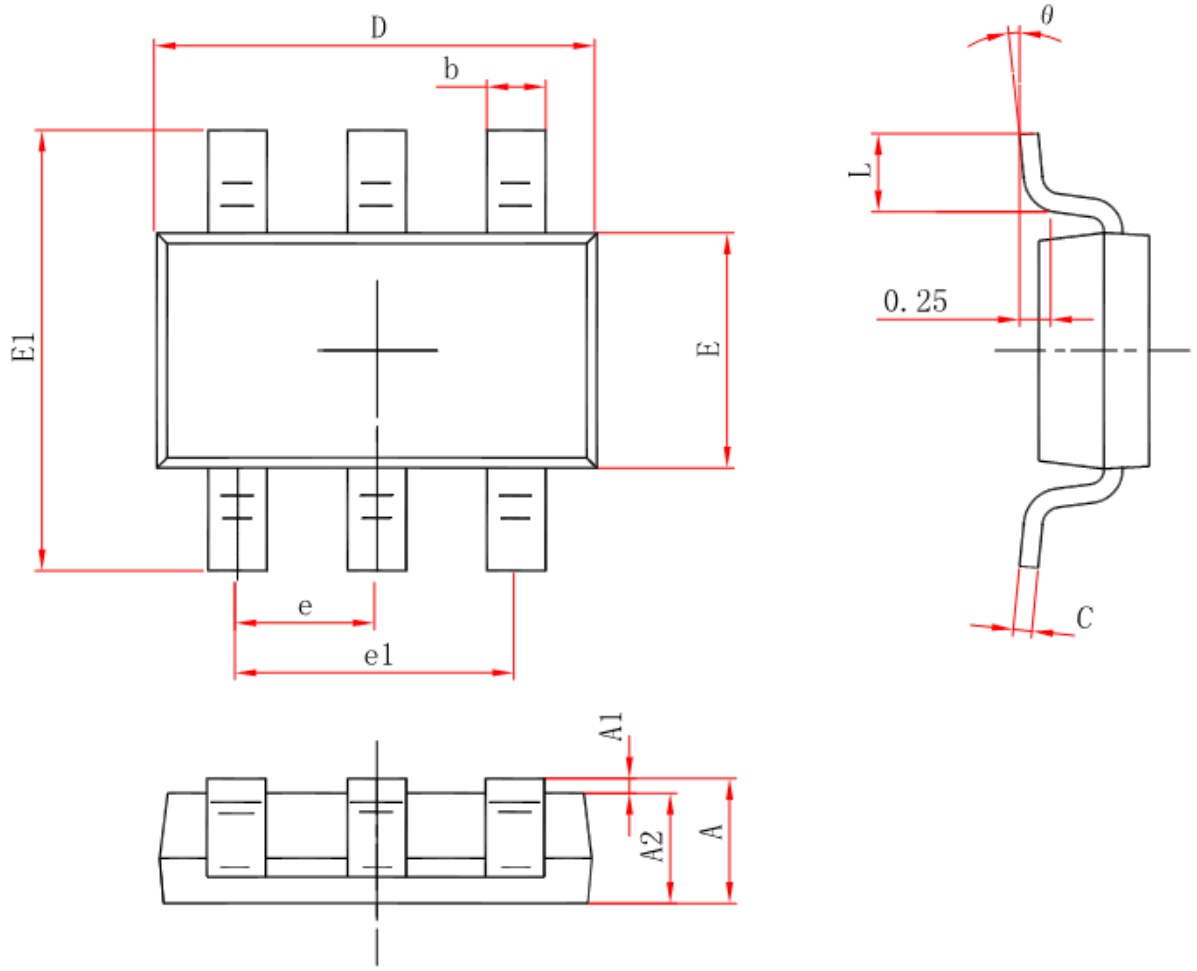

Symbol	Dimensions In Millimeters		Dimensions In Inches	
	Min	**Max**	**Min**	**Max**
A	0.700	0.900	0.028	0.035
A1	0.000	0.100	0.000	0.004
A2	0.700	0.800	0.028	0.031
b	0.350	0.500	0.014	0.020
c	0.080	0.200	0.003	0.008
D	2.820	3.020	0.111	0.119
E	1.600	1.700	0.063	0.067
E1	2.650	2.950	0.104	0.116
e	0.95（BSC）		0.037(BSC)	
e1	1.90（BSC）		0.075(BSC)	
L	0.300	0.600	0.012	0.024
θ	0°	8°	0°	8°