www.ct-micro.com

CNY17-1, CNY17-2, CNY17-3, CNY17-4
CNY17F-1, CNY17F-2, CNY17F-3, CNY17F-4
DC Input 6-Pin DMC-Isolator®
Phototransistor Optocoupler

Features

- High isolation 5000 VRMS
- Patented coplanar structure DMC-Isolator®
- Various CTR selection available
- DC input with transistor output
- Operating Temperature range - 55 °C to 110 °C
- External Creepage ≥ 7.4mm
- Distance Through Isolation ≥ 0.4mm
- Spatial Distance ≥ 7.5mm (S/SL Type)
- Spatial Distance ≥ 8.0mm (M Type)
- RoHS and REACH compliance
- Halogen compliance(Optional)
- MSL class 1
- Regulatory Approvals
  - ✓ UL - UL1577 (E364000)
  - ✓ VDE - EN60747-5-5(VDE0884-5)
  - ✓ CQC – GB4943.1, GB8898 (14001105802)
  - ✓ IEC62368 (FI/41119)

Description

The CNY17 and CNY17F series consists of a photo transistor optically coupled to an Infrared-emitting diode in a 6-lead DIP DMC-Isolator® package with different lead forming options.

Applications

- Switch mode power supplies
- Computer peripheral interface
- Microprocessor system interface

Package Outline

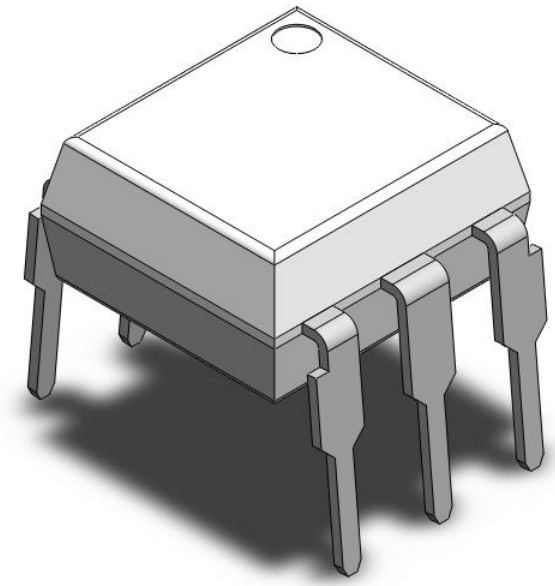

Schematic

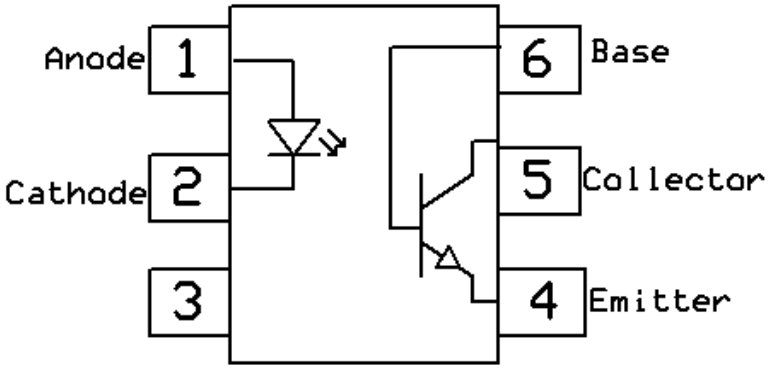

Note: CNY17F without Base Connection

Note: Different lead forming options available. See package dimension.

© 2022 CT MICRO INTERNATIONAL CORPORATION
ALL RIGHTS RESERVED.

Absolute Maximum Ratings *T_A = 25°C, unless otherwise specified*

Stresses in excess of the absolute maximum ratings can cause permanent damage to the device. Functional operation of the device is not implied at these or any other conditions in excess of those given in the operational sections of this document. In addition, extended exposure to stresses above the recommended operating conditions may affect device reliability. The absolute maximum ratings are stress ratings only.

Symbol	*Parameters*	*Ratings*	*Units*	*Notes*
V_{ISO}	Isolation voltage (AC, 1 minute, 40 ~ 60% R.H.)	5000	V_{RMS}	
T_{OPR}	Operating temperature	-55 ~ +110	°C	
T_{STG}	Storage temperature	-55 ~ +150	°C	
T_{SOL}	Soldering temperature (For 10 seconds)	260	°C	
Emitter				
I_F	Forward current	60	mA	
$I_{F(TRANS)}$	Peak transient current (≤1μs P.W,300pps)	1	A	
V_R	Reverse voltage	6	V	
P_D	Power dissipation	100	mW	
Detector				
P_D	Power dissipation	150	mW	
B_{VCEO}	Collector-Emitter Breakdown Voltage	80	V	
B_{VCBO}	Collector-Base Breakdown Voltage	80	V	
B_{VECO}	Emitter-Collector Breakdown Voltage	7	V	
B_{VEBO}	Emitter-Base Breakdown Voltage	7	V	

© 2022 CT MICRO INTERNATIONAL CORPORATION
ALL RIGHTS RESERVED.

Electrical Characteristics T_A = 25°C (unless otherwise specified)

Emitter Characteristics

Symbol	*Parameters*	*Test Conditions*	*Min*	*Typ*	*Max*	*Units*	*Notes*
V_F	Forward voltage	I_F=10mA		1.24	1.4	V	
I_R	Reverse Current	V_R = 6V	-	-	5	µA	
C_{IN}	Input Capacitance	f= 1MHz	-	20	-	pF	

Detector Characteristics

Symbol	*Parameters*		*Test Conditions*	*Min*	*Typ*	*Max*	*Units*	*Notes*
B_{VCEO}	Collector-Emitter Breakdown		I_C= 0.1mA	80	-	-	V	
B_{VECO}	Emitter-Collector Breakdown		I_E= 0.1mA	7	-	-	V	
B_{VCBO}	Collector-Base Breakdown	CNY17-1/2/3/4	I_C= 0.1mA	80	-	-	V	
B_{VEBO}	Emitter-Base Breakdown	CNY17-1/2/3/4	I_E= 0.1mA	7	-	-	V	
I_{CEO}	Collector-Emitter Dark Current		V_{CE}= 10V, I_F=0mA	-	-	50	nA	
I_{CBO}	Collector-Base Dark Current	CNY17-1/2/3/4	V_{CB}= 10V, I_F=0mA	-	-	20	nA	

© 2022 CT MICRO INTERNATIONAL CORPORATION
ALL RIGHTS RESERVED.

Electrical Characteristics T_A = 25°C (unless otherwise specified)

Transfer Characteristics

Symbol	Parameters		Test Conditions	Min	Typ	Max	Units	Notes
CTR	Current Transfer Ratio	CNY17-1,CNY17F-1	I_F= 10mA, V_{CE}= 5V	40	-	80	%	
		CNY17-2,CNY17F-2		63	-	125		
		CNY17-3,CNY17F-3		100	-	200		
		CNY17-4,CNY17F-4		160	-	320		
		CNY17-1,CNY17F-1	I_F= 1mA, V_{CE}= 5V	13	-	-		
		CNY17-2,CNY17F-2		22	-	-		
		CNY17-3,CNY17F-3		34	-	-		
		CNY17-4,CNY17F-4		56	-	-		
$V_{CE(SAT)}$	Collector- Emitter Saturation Voltage		I_F= 10mA, I_C= 2.5mA	-	-	0.3	V	
R_{IO}	Isolation Resistance		V_{IO}= 500V_{DC}	$1x10^{11}$	-	-	Ω	
C_{IO}	Isolation Capacitance		f= 1MHz	-	0.25	-	pF	

Switching Characteristics

Symbol	Parameters	Test Conditions	Min	Typ	Max	Units	Notes
T_{ON}	Turn On Time	I_c= 2mA, V_{CC}= 10V, R_L= 100Ω	-	4.3	11.5	µs	
t_r	Rise Time		-	9.8	9.8		
T_{OFF}	Turn Off Time		-	3.9	11.5	µs	
t_f	Fall Time		-	6.9	9.8		

© 2022 CT MICRO INTERNATIONAL CORPORATION
ALL RIGHTS RESERVED.

Typical Characteristic Curves *T_A = 25°C, unless otherwise specified (Continued)*

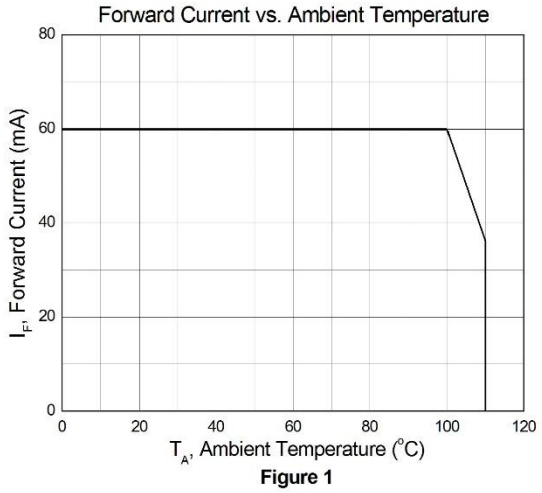

Figure 1

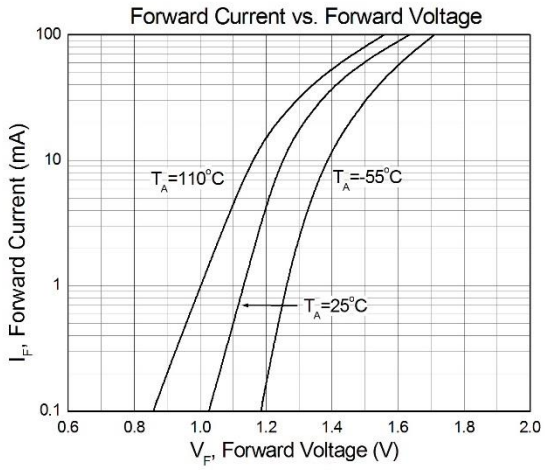

Figure 2

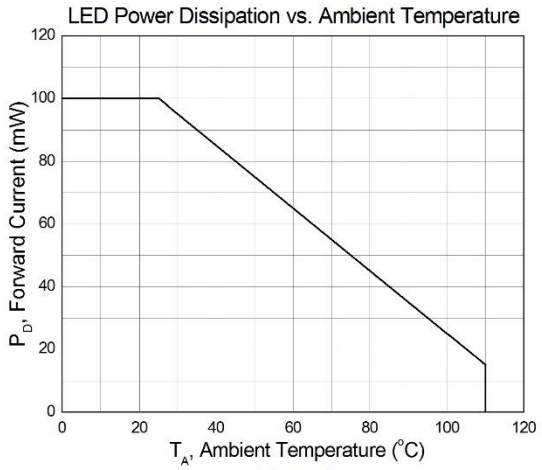

Figure 1

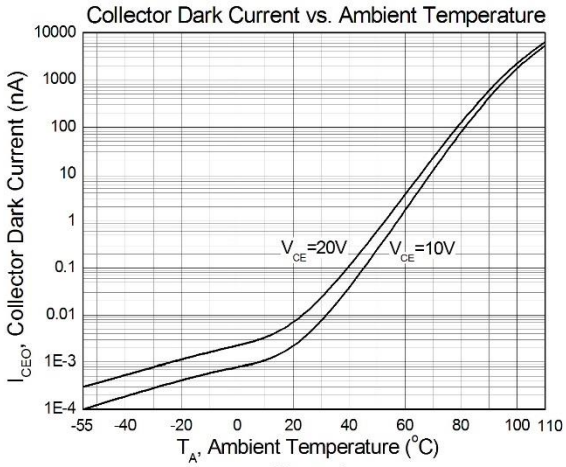

Figure 4

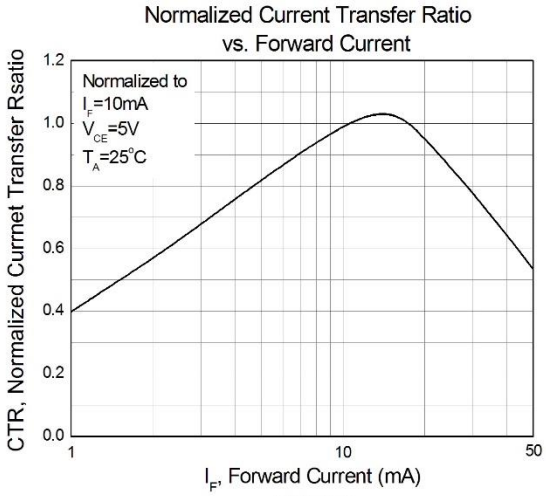

Figure 5

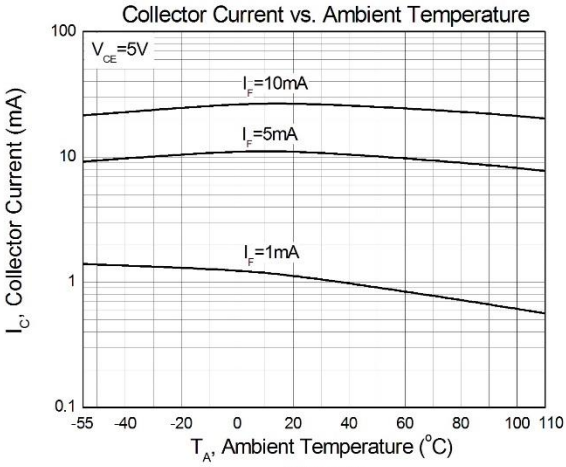

Figure 6

© 2022 CT MICRO INTERNATIONAL CORPORATION
ALL RIGHTS RESERVED.

Typical Characteristic Curves *T_A = 25°C, unless otherwise specified (Continued)*

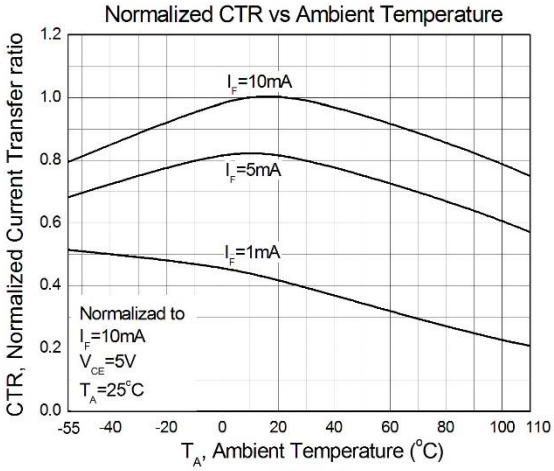

Figure 7

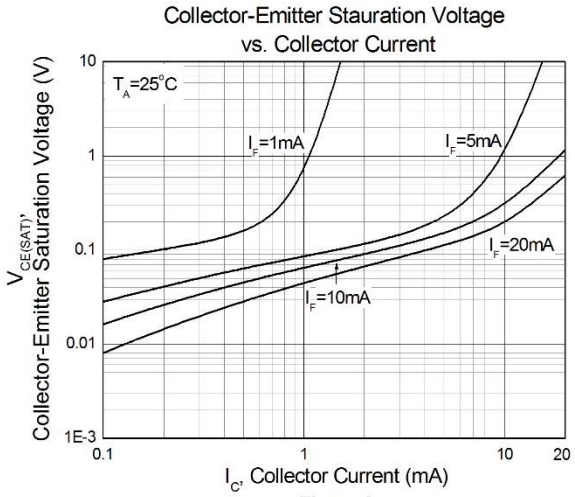

Figure 8

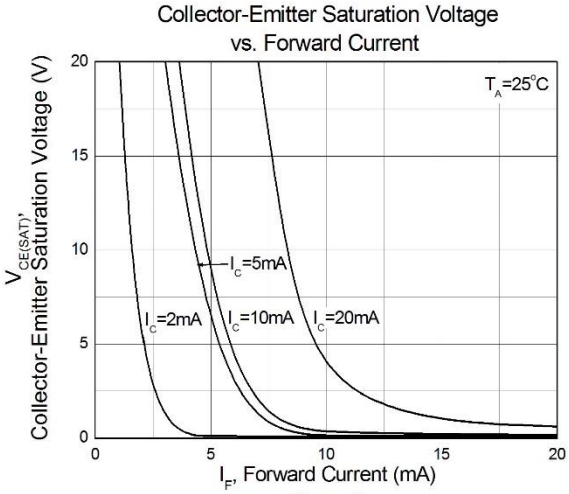

Figure 9

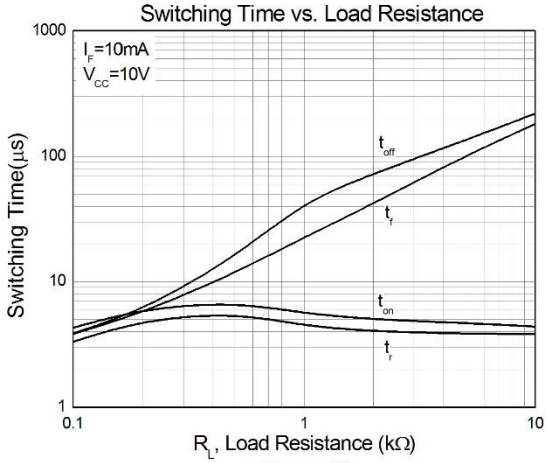

Figure 10

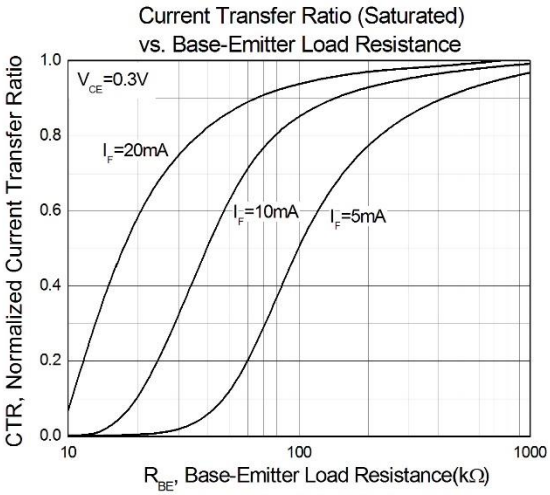

Figure 11(For CNY17 Series Only)

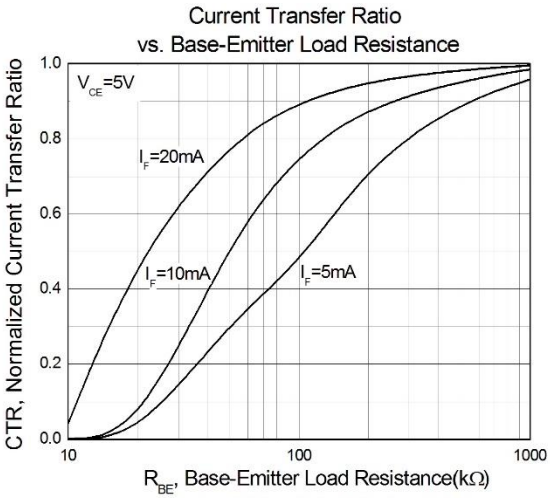

Figure 12(For CNY17 Series Only)

© 2022 CT MICRO INTERNATIONAL CORPORATION
ALL RIGHTS RESERVED.

Typical Characteristic Curves *T_A = 25°C, unless otherwise specified (Continued)*

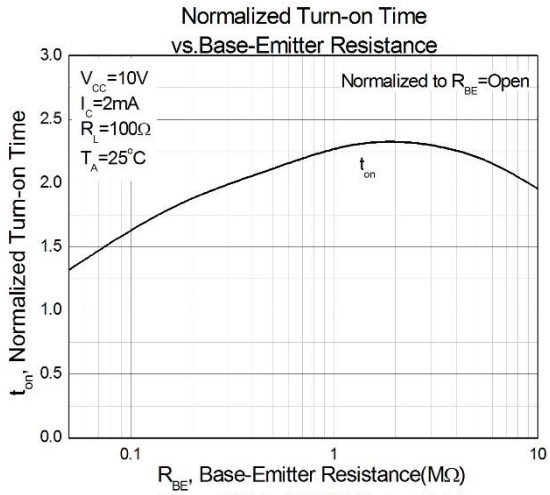

Figure 13(For CNY17 Series Only)

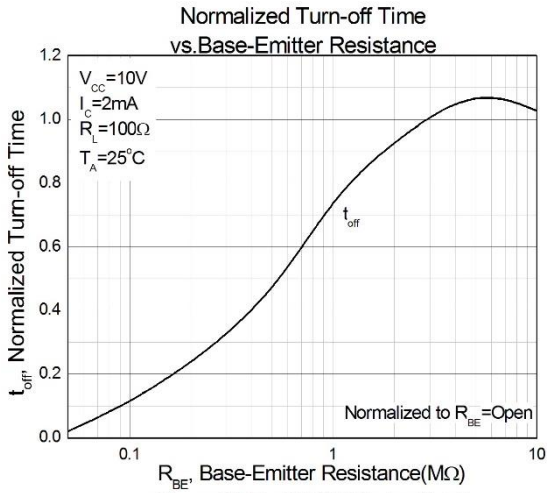

Figure 14(For CNY17 Series Only)

© 2022 CT MICRO INTERNATIONAL CORPORATION
ALL RIGHTS RESERVED.

Package Dimension *Dimensions in mm unless otherwise stated*

Standard DIP – Through Hole

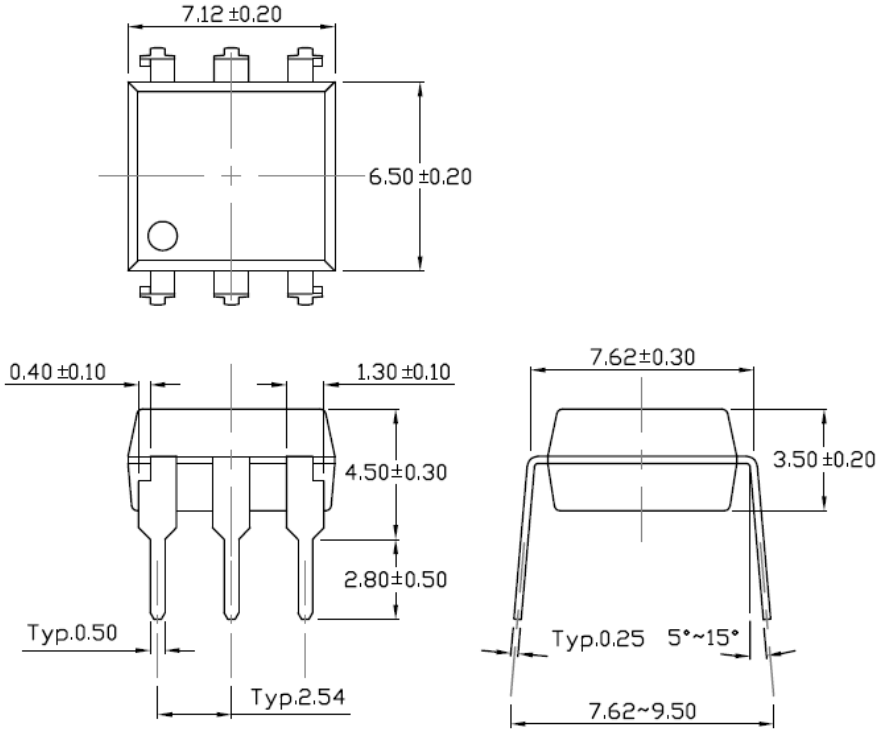

Forming Option

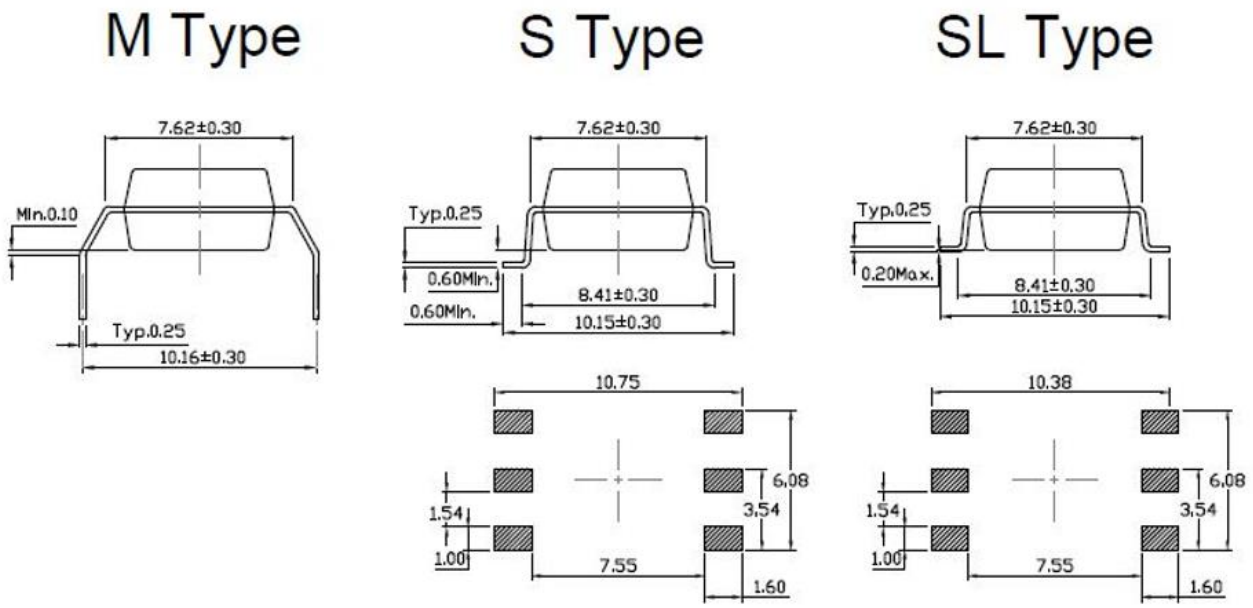

© 2022 CT MICRO INTERNATIONAL CORPORATION
ALL RIGHTS RESERVED.

Marking Information

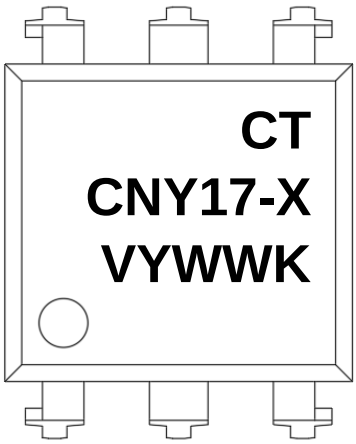

Note:

CT : Denotes “CT Micro”
CNY17 : Part Number
X : CTR Rank
V : VDE Safety Mark Option (Blank or V)
Y : One Digit Year Code
WW : Two Digit Work Week
K : Manufacturing Code

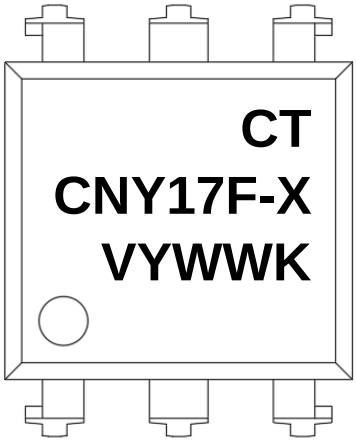

Note:

CT : Denotes “CT Micro”
CNY17F : Part Number
X : CTR Rank
V : VDE Safety Mark Option (Blank or V)
Y : One Digit Year Code
WW : Two Digit Work Week
K : Manufacturing Code

© 2022 CT MICRO INTERNATIONAL CORPORATION
ALL RIGHTS RESERVED.

Ordering Information

CNY17-X (V)(Y)(Z)-G

CNY17 = Part Number
X = CTR Rank Option. (1, 2, 3 or 4)
V = VDE Safety Mark Option (Blank or V)
Y = Lead Form Option (Blank, S, SL or M)
Z = Tape and Reel Option (Blank, T1 or T2)
G = Material Option (G: Halogen Free, Blank: Non-Halogen Free)

CNY17F-X (V)(Y)(Z)-G

CNY17F = Part Number
X = CTR Rank Option. (1, 2, 3 or 4)
V = VDE Safety Mark Option (Blank or V)
Y = Lead Form Option (Blank, S, SL or M)
Z = Tape and Reel Option (Blank, T1 or T2)
G = Material Option (G: Halogen Free, Blank: Non-Halogen Free)

Option	***Description***	***Quantity***
None	Standard 6 Pin Dip	50Units/Tube
M	Gullwing (400mil) Lead Forming	50Units/Tube
S(T1)	Surface Mount Lead Forming – With Option 1 Taping	1000 Units/Reel
S(T2)	Surface Mount Lead Forming – With Option 2 Taping	1000 Units/Reel
SL(T1)	Surface Mount (Low Profile) Lead Forming– With Option 1 Taping	1000 Units/Reel
SL(T2)	Surface Mount (Low Profile) Lead Forming – With Option 2 Taping	1000 Units/Reel

© 2022 CT MICRO INTERNATIONAL CORPORATION
ALL RIGHTS RESERVED.

Carrier Specifications *Dimensions in mm unless otherwise stated*

Tube Option Standard DIP

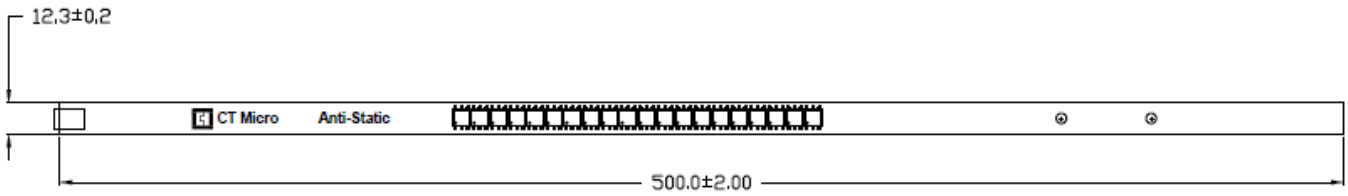

Tube Option M Type

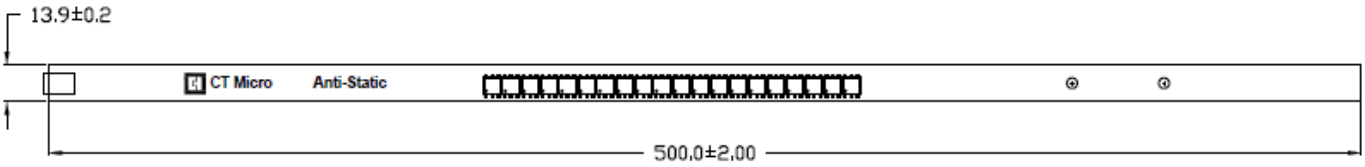

Reel Dimension *All dimensions are in mm, unless otherwise stated*

Option S(T1/T2) & SL(T1/T2)

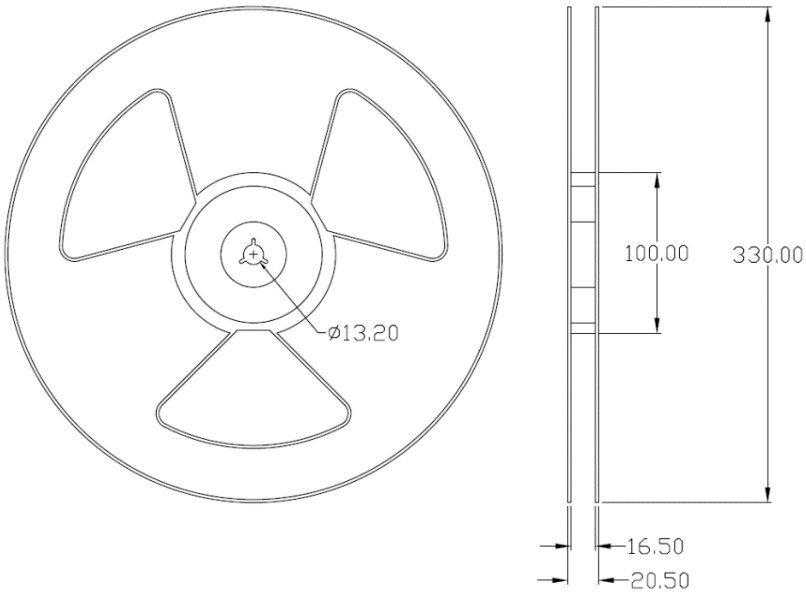

© 2022 CT MICRO INTERNATIONAL CORPORATION
ALL RIGHTS RESERVED.

Carrier Tape Specifications *Dimensions in mm unless otherwise stated*

Option S (T1) & SL (T1)

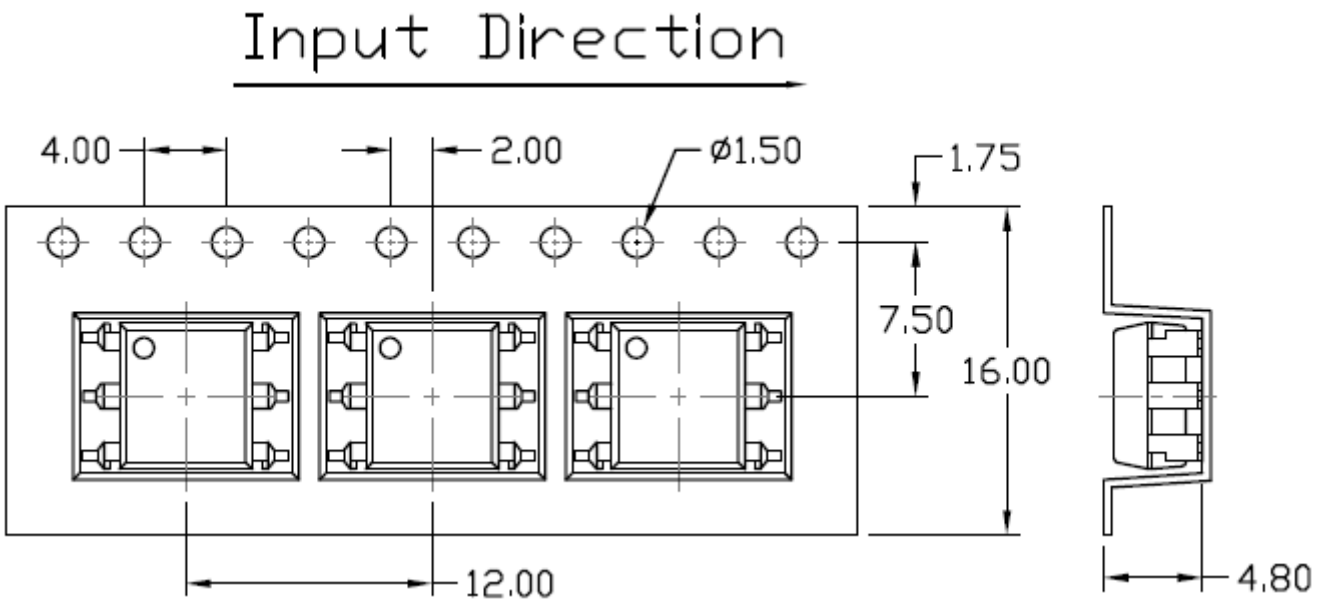

Option S (T2) & SL (T2)

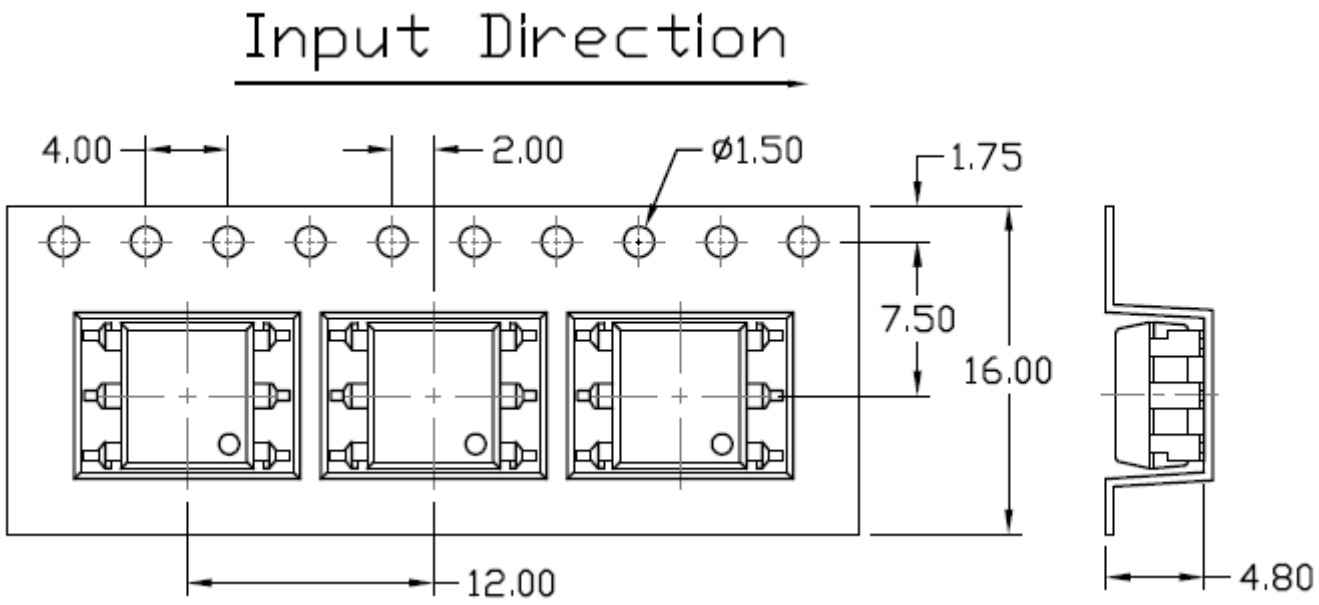

© 2022 CT MICRO INTERNATIONAL CORPORATION
ALL RIGHTS RESERVED.

Solderability spec (follow the JEDEC standard JESD22-B102)

Reflow Soldering: Immersed surface, other than the end of pin as cut-surface, must be covered by solder.
Solder-Bath: More than 95% of the electrode must be covered with solder.

Wave soldering (follow the JEDEC standard JESD22-A111)

One time soldering is recommended within the condition of temperature.
Temperature: 260+0/-5˚C.
Time: 10 sec.
Preheat temperature: 25 to 140˚C.
Preheat time: 30 to 80 sec.

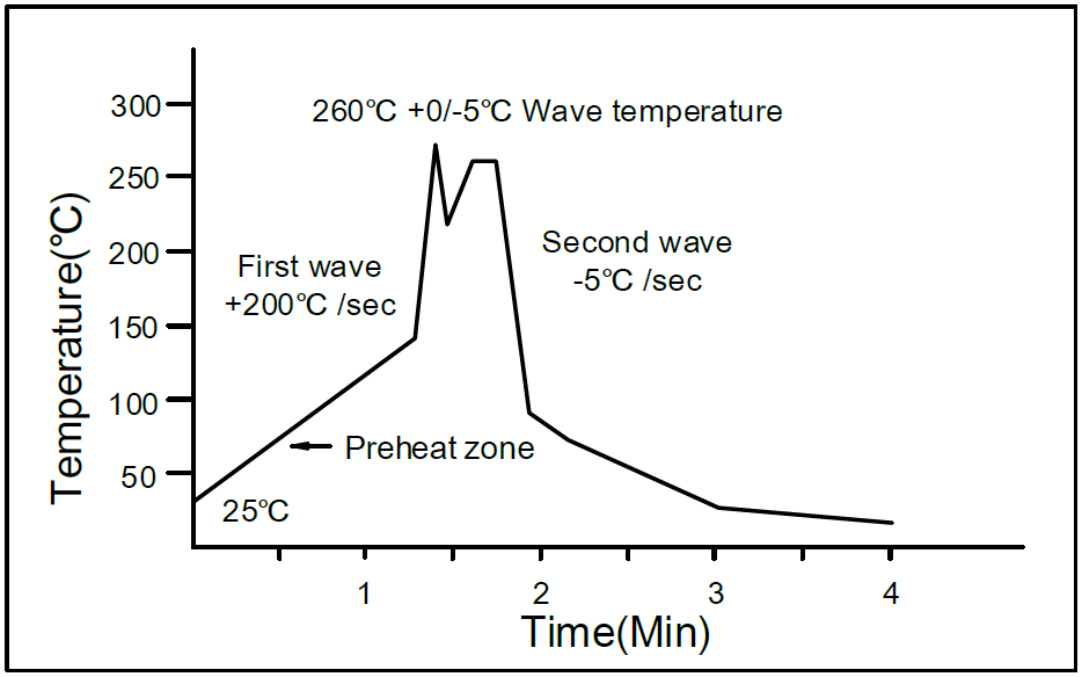

Iron Soldering (follow the standard MIL-STD 202G, Method 210F)

Allow single lead soldering in every single process.
One time soldering is recommended.
Temperature: 350±10˚C
Time: 5 sec max.

© 2022 CT MICRO INTERNATIONAL CORPORATION
ALL RIGHTS RESERVED.

Reflow Profile (follow the JEDEC standard J-STD-020)

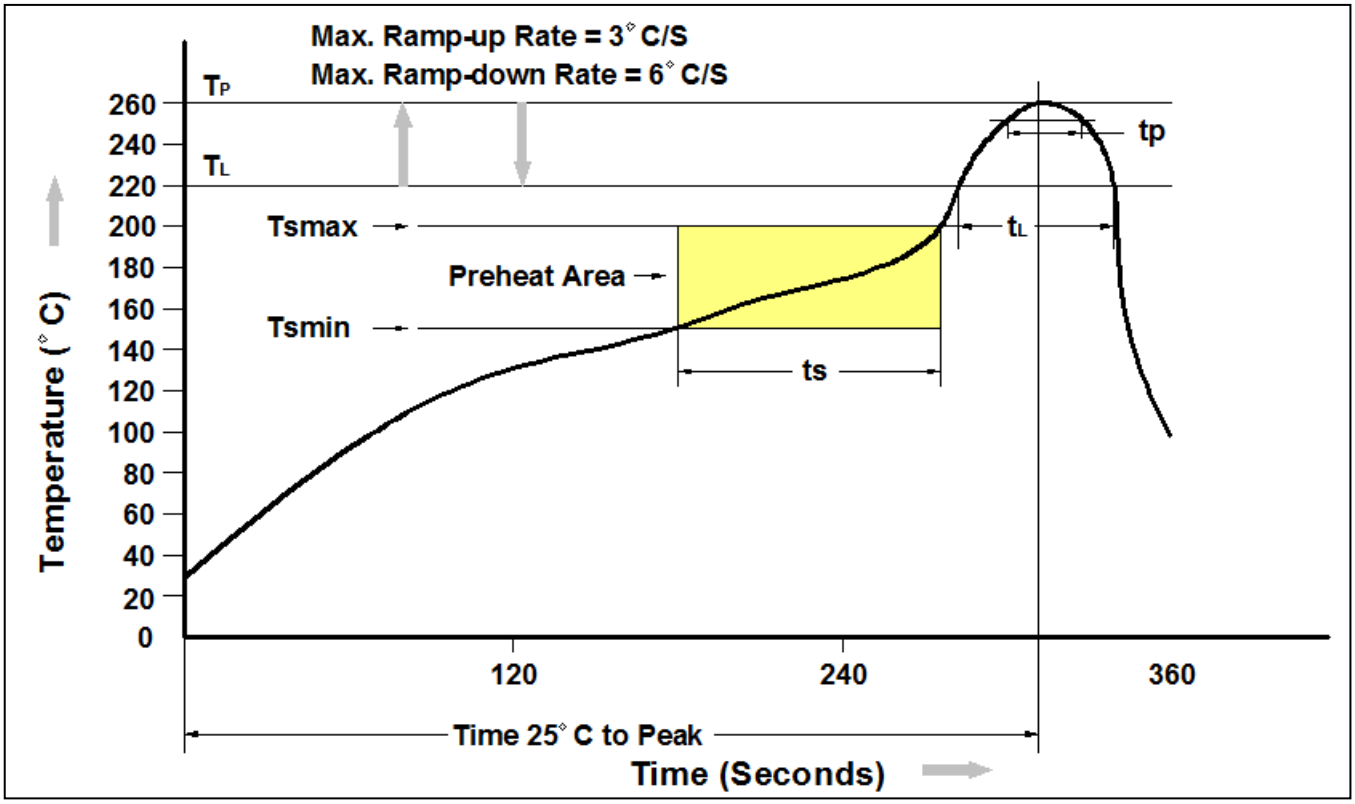

Profile Feature	Pb-Free Assembly Profile
Temperature Min. (Tsmin)	150°C
Temperature Max. (Tsmax)	200°C
Time (ts) from (Tsmin to Tsmax)	60-120 seconds
Ramp-up Rate (t_L to t_P)	3°C/second max.
Liquidous Temperature (T_L)	217°C
Time (t_L) Maintained Above (T_L)	60 – 150 seconds
Peak Body Package Temperature	260°C +0°C / -5°C
Time (t_P) within 5°C of 260°C	30 seconds
Ramp-down Rate (T_P to T_L)	6°C/second max
Time 25°C to Peak Temperature	8 minutes max.

© 2022 CT MICRO INTERNATIONAL CORPORATION
ALL RIGHTS RESERVED.

DISCLAIMER

DMC-Isolator® IS A TRADEMARK OF CT MICRO INTERNATIONAL CORPORATION AND/OR ITS SUBSIDIARIES. CT MICRO OWNS THE RIGHTS TO A NUMBER OF PATENTS, TRADEMARKS, COPYRIGHTS AND OTHER INTELLECTUAL PROPERTY.

CT MICRO RESERVES THE RIGHT TO MAKE CHANGES WITHOUT FURTHER NOTICE TO ANY PRODUCTS HEREIN TO IMPROVE RELIABILITY, FUNCTION OR DESIGN. CT MICRO DOES NOT ASSUME ANY LIABILITY ARISING OUT OF THE APPLICATION OR USE OF ANY PRODUCT OR CIRCUIT DESCRIBED HEREIN; NEITHER DOES IT CONVEY ANY LICENSE UNDER ITS PATENT RIGHTS, NOR THE RIGHTS OF OTHERS.

DISCOLORATION MIGHT OCCUR ON THE PACKAGE SURFACE AFTER SOLDERING, REFLOW OR LONG TERM USE. THIS DOES NOT IMPACT THE PRODUCT PERFORMANCE NOR THE PRODUCT RELIABILITY.

CT MICRO ARE NOT AUTHORIZED FOR USE AS CRITICAL COMPONENTS IN LIFE SUPPORT DEVICES OR SYSTEMS WITHOUT EXPRESS WRITTEN APPROVAL OF CT MICRO INTERNATIONAL CORPORATION.

1. *Life support devices or systems are devices or systems which, (a) are intended for surgical implant into the body, or (b) support or sustain life, or (c) whose failure to perform when properly used in accordance with instruction for use provided in the labelling, can be reasonably expected to result in significant injury to the user.*
2. *A critical component is any component of a life support device or system whose failure to perform can be reasonably expected to cause the failure of the life support device or system, or to affect its safety or effectiveness.*

© 2022 CT MICRO INTERNATIONAL CORPORATION
ALL RIGHTS RESERVED.