dual enhancement-type p-channel MOSFETs

designed for . . .

- **Analog Switches**
- **Differential Amplifiers**
- **Impedance Converters**

Performance Curves MACA MACB MACC See Section 4

BENEFITS

- High Input Impedance at High Temperature
  I_{GSS} = 30 pA Typical, T = 125°C (M108)
- High Off-Isolation
  $I_{D(off)}$ = 200 pA Maximum

TO-99
See Section 5

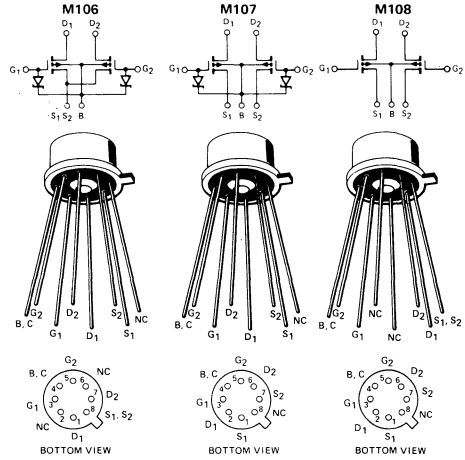

ABSOLUTE MAXIMUM RATINGS (25°C)

Drain-to-Source Voltage . . . . . -30 V
Gate-to-Source Voltage (M106/7) . . . . . -30 V
Gate-to-Source Voltage (M108) . . . . . -50 V
Gate-to-Drain Voltage (M106/7) . . . . . -30 V
Gate-to-Drain Voltage (M108) . . . . . -50 V
Drain Current . . . . . -50 mA
Gate Zener Current . . . . . ±1.0 mA
Storage Temperature . . . . . -65 to 150°C
Operating Junction Temperature. . . -55 to 125°C
Total Dissipation at 25°C Ambient Temperature
(Derate 5 mW/°C to 125°C) . . . . . 500 mW
Lead Temperature
(1/16" from case for 10 seconds) . . . . . .260°C

ELECTRICAL CHARACTERISTICS (25°C unless otherwise noted)

		Characteristic		M106, M107 Min	M106, M107 Max	M108 Min	M108 Max	Unit	Test Conditions
1	STATIC	BV_{DSS}	Drain-Source Breakdown Voltage	-30		-30		V	I_D = -1 μA, V_{GS} = V_{BS} = 0
2	STATIC	BV_{SDS}	Source-Drain Breakdown Voltage	-30		-30		V	I_S = -1 μA, V_{GD} = V_{BD} = 0
3	STATIC	BV_{GBS}	Gate-Body Breakdown Voltage	-30		±100*		V	I_G = -10 μA, V_{SB} = V_{DB} = 0
4	STATIC	I_{GSS}	Gate-Body Leakage		-100		-1	pA	V_{GS} = -20 V, V_{DS} = V_{BS} = 0
5	STATIC	$I_{D(off)}$	Drain Cutoff Current		-200		-200	pA	V_{DS} = -20 V, V_{GS} = V_{BS} = 0
6	STATIC	$I_{S(off)}$	Source Cutoff Current		-200		-200	pA	V_{SD} = -20 V, V_{GD} = V_{BD} = 0
7	STATIC	$V_{GS(th)}$	Gate Threshold Voltage	-2	-6	-2	-8	V	V_{GS} = V_{DS}, I_D = -10 μA, V_{BS} = 0
8	STATIC	$I_{D(on)}$	Drain Current	-10		-10		mA	V_{DS} = -10 V, V_{GS} = -10 V, V_{BS} = 0
9	STATIC	$r_{DS(on)}$	Drain Source ON Resistance		150		150	Ω	V_{GS} = -15 V, I_D = -100 μA, V_{BS} = 0
10	STATIC	$r_{DS(on)}$	Drain Source ON Resistance		120		120	Ω	V_{GS} = -20 V, I_D = -100 μA, V_{BS} = 0
11	DYNAMIC	g_{fs}	Common-Source Forward Transconductance	2,000		2,000		μmho	V_{DS} = -10 V, V_{GS} = -10 V, V_{BS} = 0, f = 1 kHz
12	DYNAMIC	C_{gs}	Gate-Source Capacitance		4		4	pF	V_{GB} = V_{DB} = 0, f = 1 MHz, Body Guarded
13	DYNAMIC	C_{gd}	Gate-Drain Capacitance		4		4	pF	V_{GB} = V_{DB} = 0, f = 1 MHz, Body Guarded
14	DYNAMIC	C_{sb}	Source-Body Capacitance		5.5		5.5	pF	V_{GB} = 0, V_{DB} = V_{SB} = -5 V, f = 1 MHz
15	DYNAMIC	C_{db}	Drain-Body Capacitance		5.5		5.5	pF	V_{GB} = 0, V_{DB} = V_{SB} = -5 V, f = 1 MHz
16	DYNAMIC	C_{ds}	Drain-Source Capacitance		0.5		0.5	pF	V_{GB} = 0, V_{DB} = V_{SB} = -5 V, f = 1 MHz, Body Guarded
*Gate-Oxide Breakdown Voltage				MACA	MACB	MACC			

3

© 1977 Siliconix incorporated