MMBTSC2412
NPN Transistor

Features

- For Switching and AF Amplifier Applications.

SOT-23

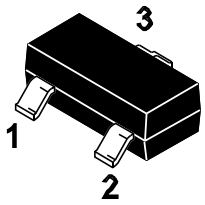

1.Base 2.Emitter 3.Collector

Equivalent Circuit

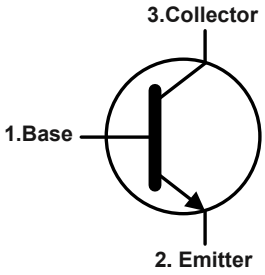

Marking Code :
MMBTSC2412Q:1Q
MMBTSC2412R:1B
MMBTSC2412S:1C

Absolute Maximum Ratings

Ratings at 25℃ ambient temperature unless otherwise specified.

Parameter	Symbol	Value	Unit
Collector Base Voltage	V_{CBO}	60	V
Collector Emitter Voltage	V_{CEO}	50	V
Emitter Base Voltage	V_{EBO}	7	V
Collector Current	I_C	150	mA
Maximum Power Dissipation	P_D	200	mW
Junction Temperature	T_J	150	℃
Storage Temperature Range	T_{STG}	-55 to +150	℃

Electrical Characteristics (TA=25℃)

Parameter			Symbol	Min.	Typ.	Max.	Unit
DC Current Gain at V_{CE} = 6 V, I_C = 1 mA	Gain Group	Q R S	H_{FE}	120 180 270	-- -- --	270 390 560	--
Collector Base Cutoff Current at V_{CB} = 60V			I_{CBO}	--	--	100	nA
Emitter Base Cutoff Current at V_{EB} = 7 V			I_{EBO}	--	--	100	nA
Collector Base Breakdown Voltage at I_C = 50 μA			$V_{(BR)CBO}$	60	--	--	V
Collector Emitter Breakdown Voltage at I_C = 1 mA			$V_{(BR)CEO}$	50	--	--	V
Emitter Base Breakdown Voltage at I_E = 50 μA			$V_{(BR)EBO}$	7	--	--	V
Collector Emitter Saturation Voltage at I_C = 50 mA, I_B = 5 mA			$V_{CE(sat)}$	--	--	0.4	V
Base Emitter Saturation Voltage at I_C = 50 mA, I_B = 5 mA			$V_{BE(sat)}$	--	--	1	V
Transition Frequency at V_{CE} = 12 V, I_E = 2 mA, f = 100 MHz			F_T	--	180	--	MHz
Output Capacitance at V_{CB} = 12 V, f = 1 MHz			C_{ob}	--	--	3.5	pF

Typical Characteristic Curves

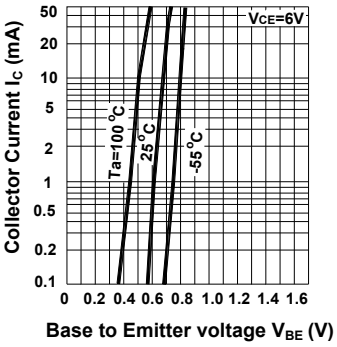

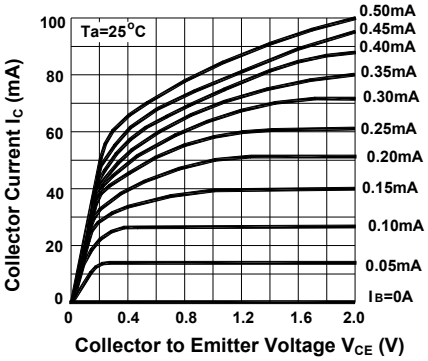

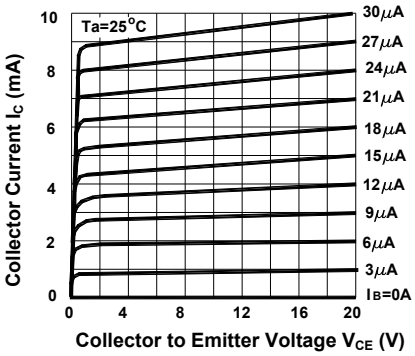

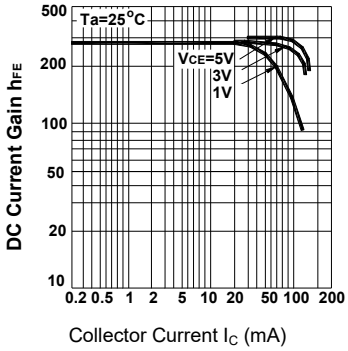

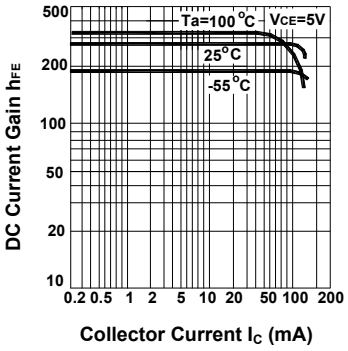

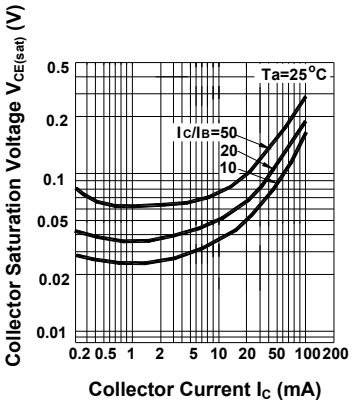

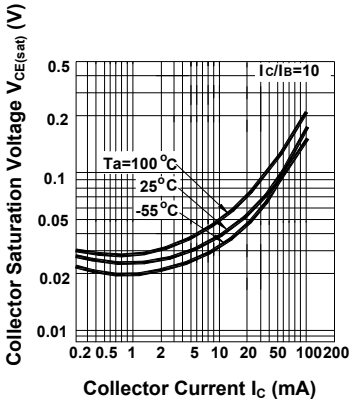

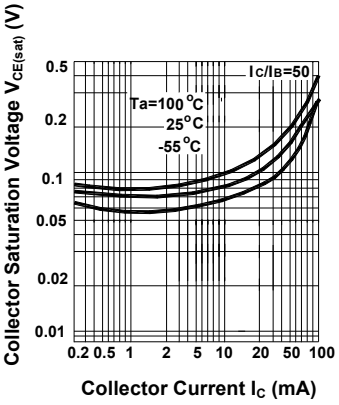

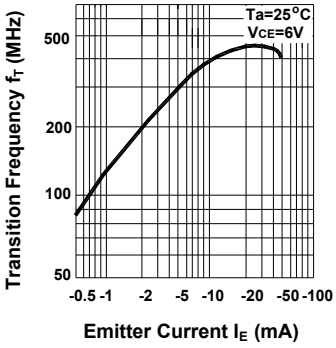

Package Outline

SOT-23
Dimensions in mm

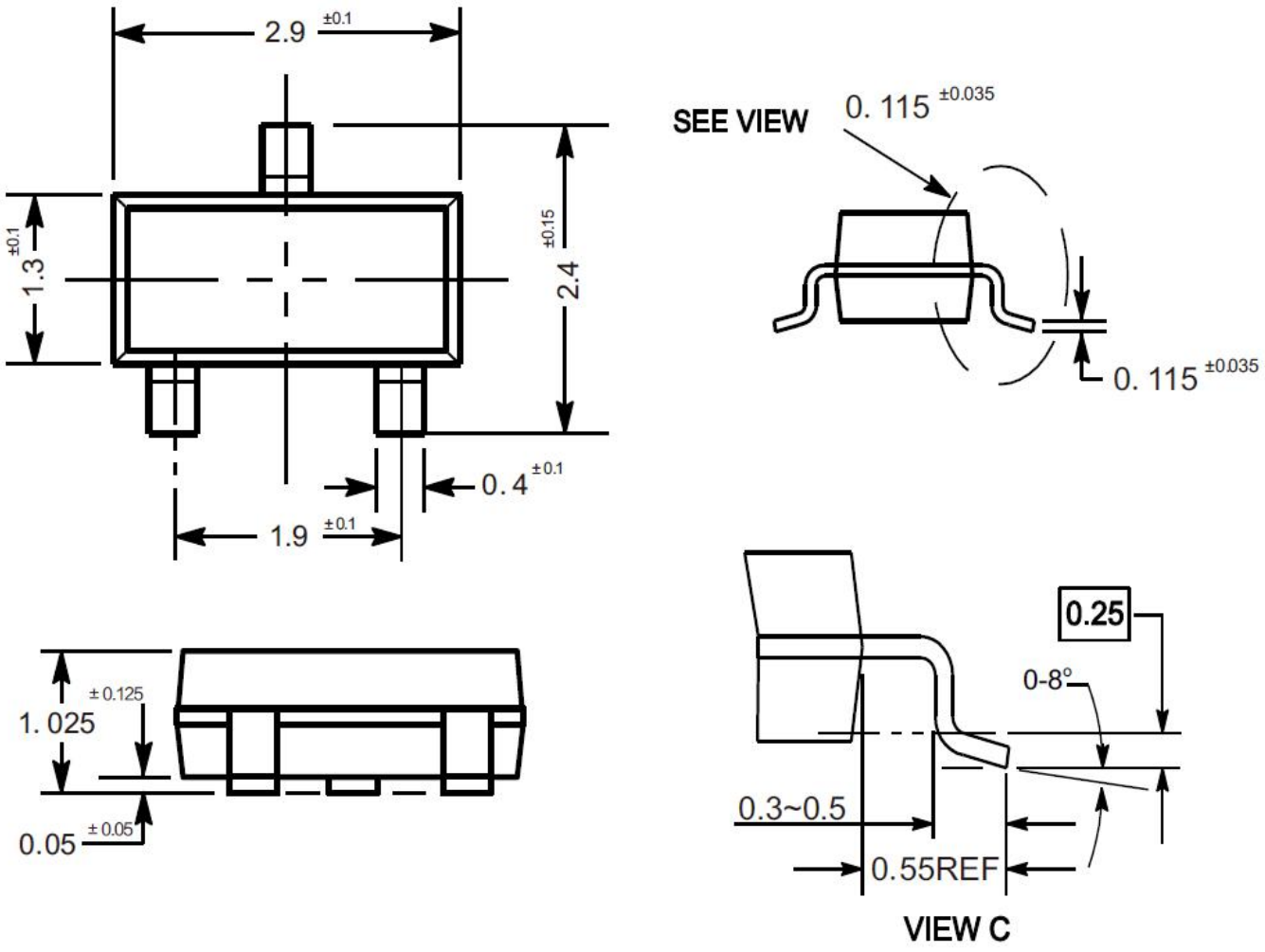

Ordering Information

Device	Package	Shipping
MMBTSC2412	SOT-23	3,000PCS/Reel&7inches

Conditions of Soldering and Storage

◆ Recommended condition of reflow soldering

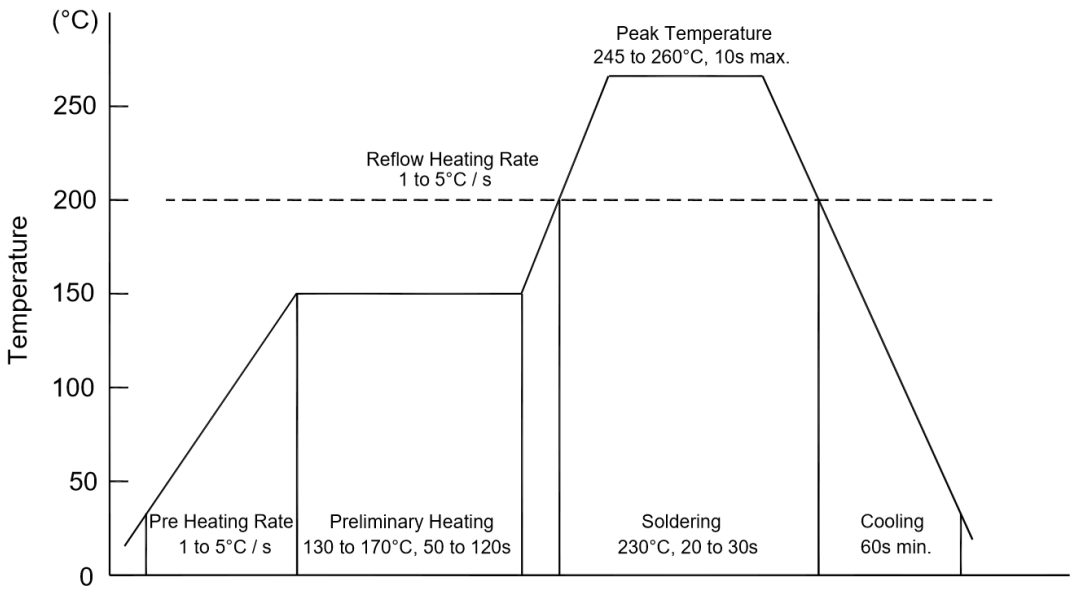

Recommended peak temperature is over 245 ^{O}C. If peak temperature is below 245 ^{O}C, you may adjust the following parameters:

- Time length of peak temperature (longer)
- Time length of soldering (longer)
- Thickness of solder paste (thicker)

◆ Conditions of hand soldering

- Temperature: 370 ^{O}C
- Time: 3s max.
- Times: one time

◆ Storage conditions

- **Temperature**
  5 to 40 ^{O}C
- **Humidity**
  30 to 80% RH
- **Recommended period**
  One year after manufacturing

Package Specifications

- The method of packaging

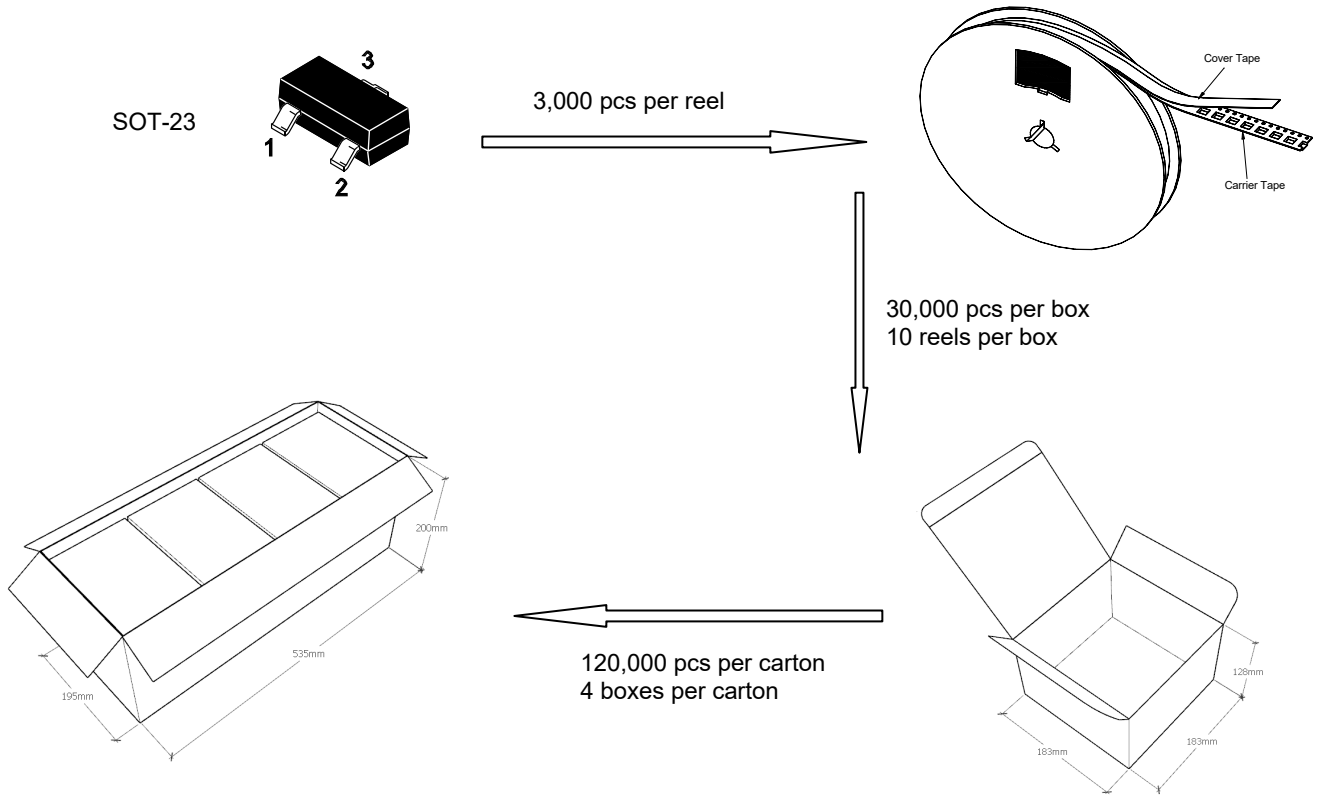

◆ Embossed tape and reel data

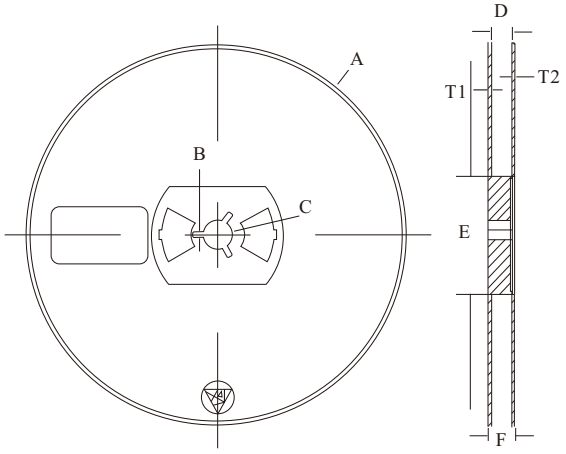

Symbol	Value (unit: mm)
A	Ø 177.8±1
B	2.7±0.2
C	Ø 13.5±0.2
E	Ø 54.5±0.2
F	12.3±0.3
D	9.6+2/-0.3
T1	1.0±0.2
T2	1.2±0.2
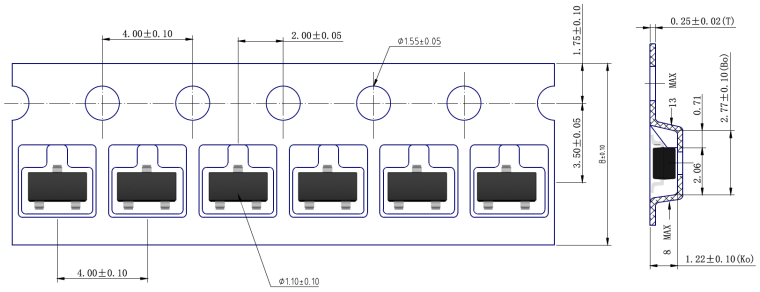
Reel (7")