24-Bit A/D LCD Flash MCU

BH67F5265/BH67F5275

Revision: V2.00 Date: October 20, 2025

www.holtek.com

Features

CPU Features

- Operating voltage
  - f_{SYS}=4MHz: 2.2V~5.5V
  - f_{SYS}=8MHz: 2.2V~5.5V
  - f_{SYS}=12MHz: 2.7V~5.5V
  - f_{SYS}=16MHz: 3.3V~5.5V
- Up to 0.25μs instruction cycle with 16MHz system clock
- Power down and wake-up functions to reduce power consumption
- Oscillator types
  - External High Speed Crystal – HXT
  - Internal High Speed 4/8/12MHz RC – HIRC
  - External Low Speed 32.768kHz Crystal – LXT
  - Internal Low Speed 32kHz RC – LIRC
- Multi-mode operation: FAST, SLOW, IDLE and SLEEP
- Fully integrated internal oscillators require no external components
- All instructions executed in 1~3 instruction cycles
- Table read instructions
- 115 powerful instructions
- 16-level subroutine nesting
- Bit manipulation instruction

Peripheral Features

- Flash Program Memory: 16K×16~32K×16
- Data Memory: 1024×8~2048×8
- True EEPROM Memory: 1024×8~2048×8
- In Application Programming function – IAP
- Internal On-Chip Debug Support function – OCDS, only available for BH67F5275 and BH67V5265
- Watchdog Timer function
- Up to 57 bidirectional I/O lines
- Programmable I/O source current for LED applications
- Two external interrupt lines shared with I/O pins
- Multiple Timer Modules for time measure, input capture, compare match output, PWM output function or single pulse output function
  - One 16-bit Standard Type TM – STM
  - Three 10-bit Periodic Type TMs – PTM0~PTM2
  - One 10-bit Audio Type TM – ATM, only available for BH67F5275
- Serial Interface Module – SIM includes SPI and I^2C interfaces
- Single Serial Peripheral Interface – SPI
- Fully-duplex / Half-duplex Universal Asynchronous Receiver and Transmitter Interface – UART
- Dual Time-Base functions for generation of fixed time interrupt signals
- 3 differential or 6 single-end external channel 24-bit resolution Delta Sigma A/D converter

- LCD Driver function
  - SEGs×COMs: 30×4, 28×6 or 26×8 for BH67F5265
    SEGs×COMs: 44×4, 42×6 or 40×8 for BH67F5275
  - Duty type: 1/4 duty, 1/6 duty or 1/8 duty
  - Bias level: 1/3 bias or 1/4 bias
  - Bias type: R type or C type
  - Waveform type: type A or type B
- Integrated Multiplier/Divider Unit – MDU
- Integrated 16-bit Cyclic Redundancy Check function – CRC
- Low voltage reset function
- Low voltage detect function
- Wide range of available package types

Applications

- Electronic Scales
- Blood Pressure Meters
- Blood Glucose Meters
- Pressure Switches
- Other Measuring Products

General Description

The devices are Flash Memory A/D type 8-bit high performance RISC architecture microcontrollers which include a multi-channel 24-bit Delta Sigma A/D converter.

For memory features, the Flash Memory offers users the convenience of multi-programming features. Other memory includes an area of RAM Data Memory as well as an area of true EEPROM memory for storage of non-volatile data such as serial numbers, calibration data etc. By using the In Application Programming technology, users have a convenient means to directly store their measured data in the Flash Program Memory as well as having the ability to easily update their application programs.

Analog features include a multi-channel 24-bit Delta Sigma A/D Converter with both single and differential inputs and a fully integrated LCD driver. Multiple and extremely flexible Timer Modules provide timing, pulse generation and PWM generation functions. Communication with the outside world is catered for by including fully integrated SPI, I^2C and UART interface functions, three popular interfaces which provide designers with a means of easy communication with external peripheral hardware. Protective features such as an internal Watchdog Timer, Low Voltage Reset and Low Voltage Detector coupled with excellent noise immunity and ESD protection ensure that reliable operation is maintained in hostile electrical environments.

A full choice of external, internal high and low oscillators is provided including two fully integrated system oscillators which require no external components for their implementation. The ability to operate and switch dynamically between a range of operating modes using different clock sources gives users the ability to optimise microcontroller operation and minimise power consumption.

The inclusion of flexible I/O programming features, Time-Base funcitons along with many other features enhance the versatility of the devices to suit for applications that interface directly to analog signals which require a low noise and high accuracy analog to digital converter.

Selection Table

Most features are common to all devices and the main features distinguishing them are Memory capacity, I/O count, TM features, LCD driver and package types. The following table summarises the main features of each device.

Part No.	Program Memory	Data Memory	Data EEPROM	I/O	IAP	External Interrupt	A/D
BH67F5265	16K×16	1024×8	1024×8	43	√	2	24-bit×6
BH67F5275	32K×16	2048×8	2048×8	57			

Part No.	Time Base	Timer Module	LCD Driver	SIM	SPI	Stack	Package
BH67F5265	2	16-bit STM×1 10-bit PTM×3	30×4 28×6 26×8	√	√	16	32QFN 48/64LQFP
BH67F5275		16-bit STM×1 10-bit PTM×3 10-bit ATM×1	44×4 42×6 40×8				32QFN 48/64/80LQFP

Note: As devices exist in more than one package format, the table reflects the situation for the package with the most pins.

Block Diagram

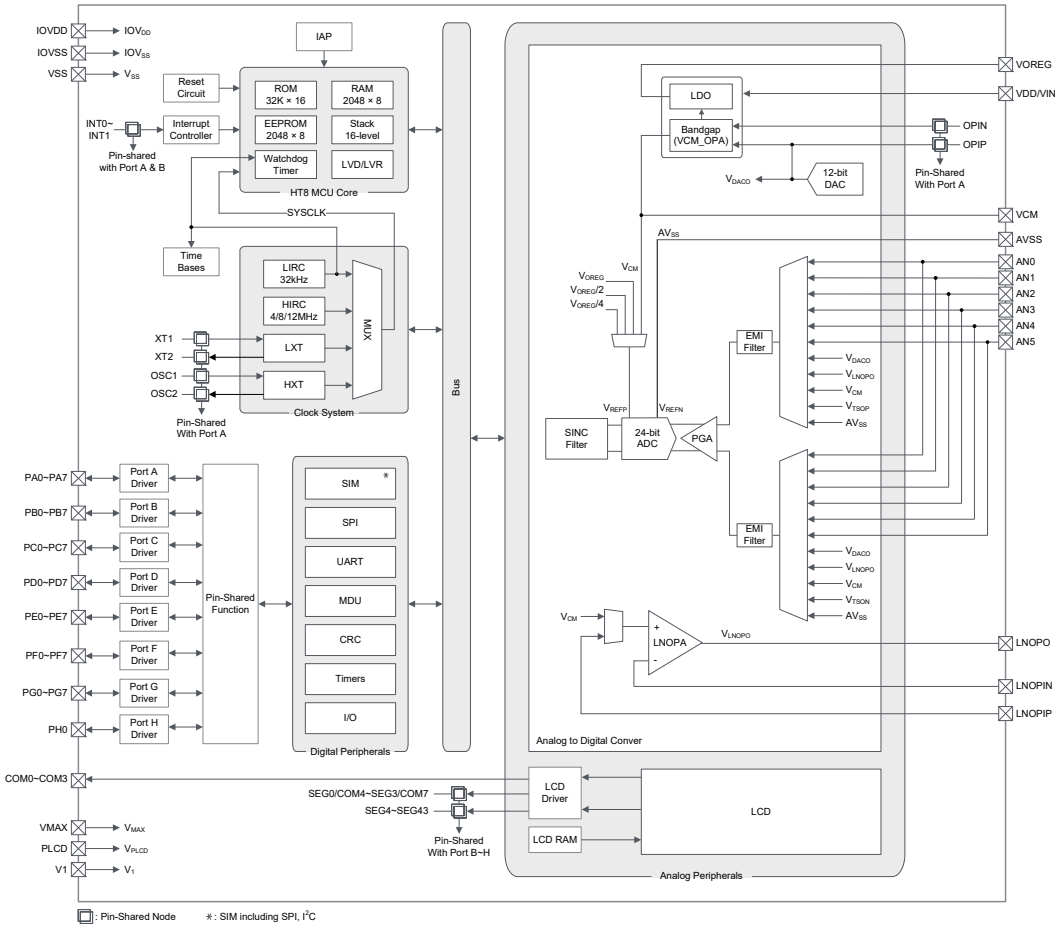

Note: The figure illustrates the Block Diagram of the device with maximum features, the functional differences between the series of devices are provided in the Selection Table.

Pin Assignment

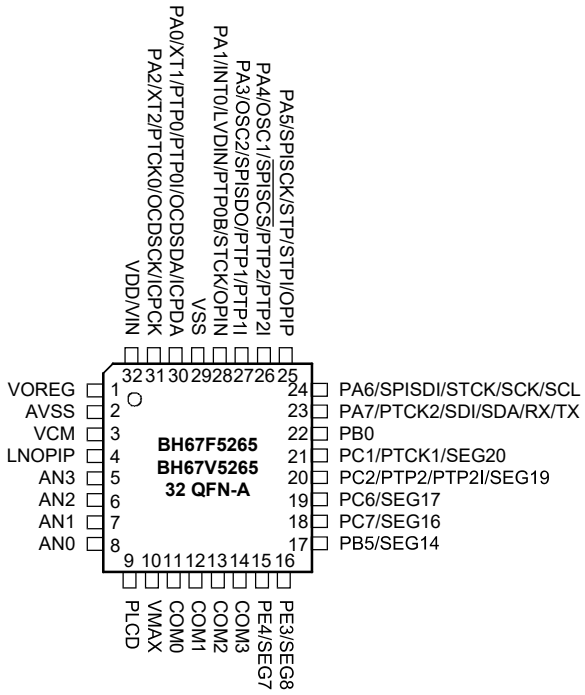

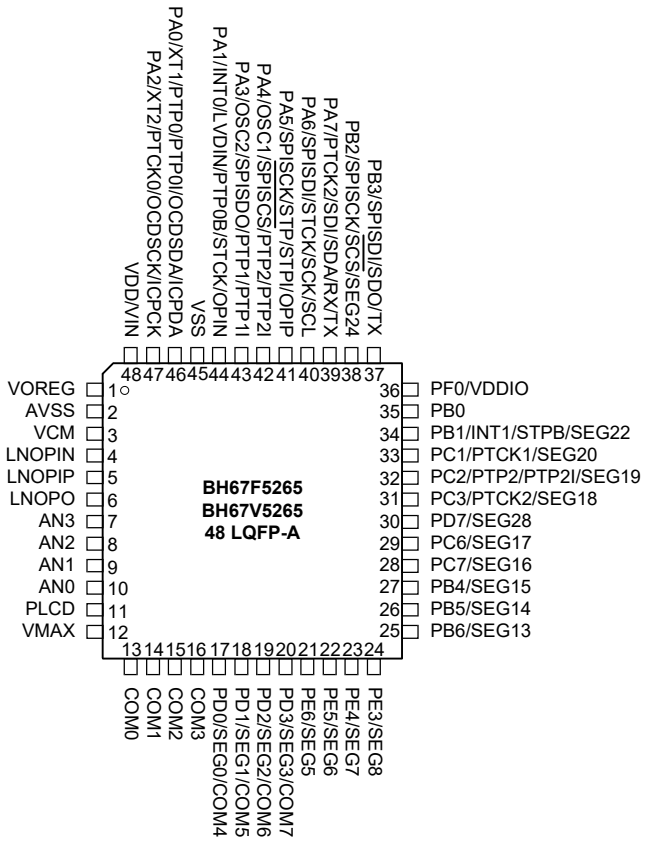

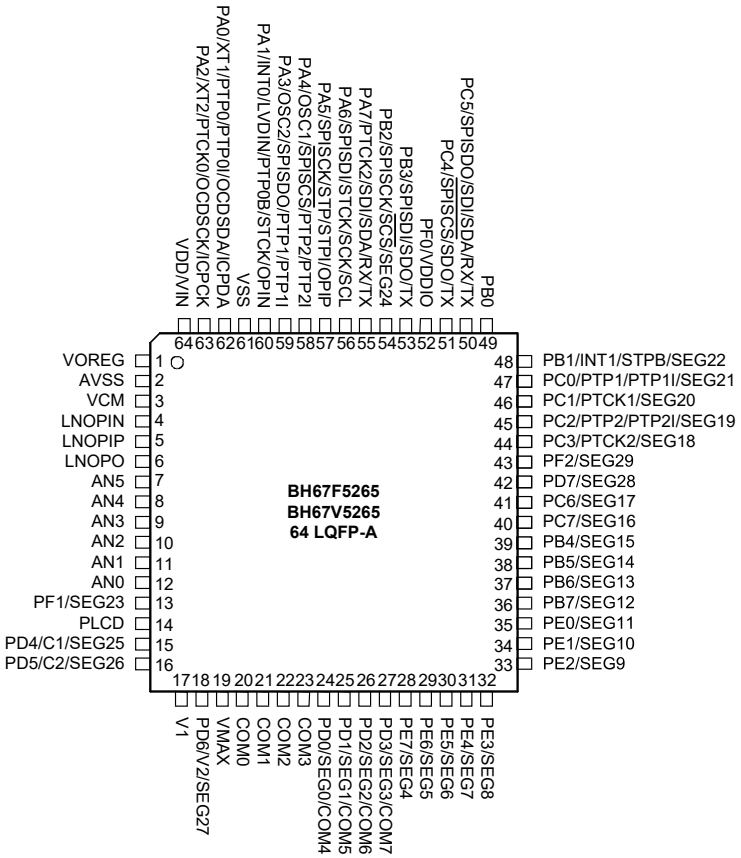
BH67F5265
BH67V5265
64 LQFP-A
VOREG 1
AVSS 2
VCM 3
LNOPIN 4
LNOPIP 5
LNOPO 6
AN5 7
AN4 8
AN3 9
AN2 10
AN1 11
AN0 12
PF1/SEG23 13
PLCD 14
PD4/C1/SEG25 15
PD5/C2/SEG26 16
17 V1
18 PD6/V2/SEG27
19 VMAX
20 COM0
21 COM1
22 COM2
23 COM3
24 PD0/SEG0/COM4
25 PD1/SEG1/COM5
26 PD2/SEG2/COM6
27 PD3/SEG3/COM7
28 PE7/SEG4
29 PE6/SEG5
30 PE5/SEG6
31 PE4/SEG7
32 PE3/SEG8
33 PE2/SEG9
34 PE1/SEG10
35 PE0/SEG11
36 PB7/SEG12
37 PB6/SEG13
38 PB5/SEG14
39 PB4/SEG15
40 PC7/SEG16
41 PC6/SEG17
42 PD7/SEG28
43 PF2/SEG29
44 PC3/PTCK2/SEG18
45 PC2/PTP2/PTP2I/SEG19
46 PC1/PTCK1/SEG20
47 PC0/PTP1/PTP1I/SEG21
48 PB1/INT1/STPB/SEG22
49 PB0
50 PC5/SPISDO/SDI/SDA/RX/TX
51 PC4/SPISCS/SDO/TX
52 PF0/VDDIO
53 PB3/SPISDI/SDO/TX
54 PB2/SPISCK/SCS/SEG24
55 PA7/PTCK2/SDI/SDA/RX/TX
56 PA6/SPISDI/STCK/SCK/SCL
57 PA5/SPISCK/STP/STPI/OPIP
58 PA4/OSC1/SPISCS/PTP2/PTP2I
59 PA3/OSC2/SPISDO/PTP1/PTP1I
60 PA1/INT0/LVDIN/PTP0B/STCK/OPIN
61 VSS
62 PA0/XT1/PTP0/PTP0I/OCDSDA/ICPDA
63 PA2/XT2/PTCK0/OCDSCK/ICPCK
64 VDD/VIN

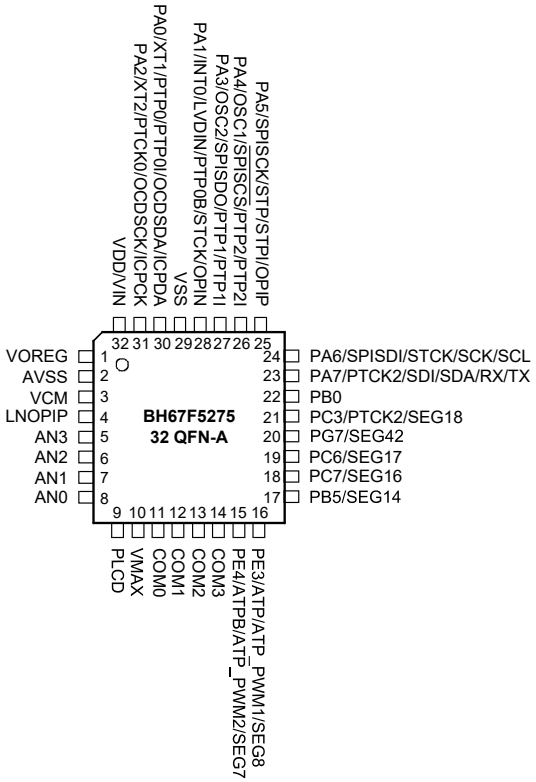
BH67F5275
32 QFN-A
VOREG 1
AVSS 2
VCM 3
LNOPIP 4
AN3 5
AN2 6
AN1 7
AN0 8
9 PLCD
10 VMAX
11 COM0
12 COM1
13 COM2
14 COM3
15 PE4/ATPB/ATP_PWM2/SEG7
16 PE3/ATP/ATP_PWM1/SEG8
17 PB5/SEG14
18 PC7/SEG16
19 PC6/SEG17
20 PG7/SEG42
21 PC3/PTCK2/SEG18
22 PB0
23 PA7/PTCK2/SDI/SDA/RX/TX
24 PA6/SPISDI/STCK/SCK/SCL
25 PA5/SPISCK/STP/STPI/OPIP
26 PA4/OSC1/SPISCS/PTP2/PTP2I
27 PA3/OSC2/SPISDO/PTP1/PTP1I
28 PA1/INT0/LVDIN/PTP0B/STCK/OPIN
29 VSS
30 PA0/XT1/PTP0/PTP0I/OCDSDA/ICPDA
31 PA2/XT2/PTCK0/OCDSCK/ICPCK
32 VDD/VIN

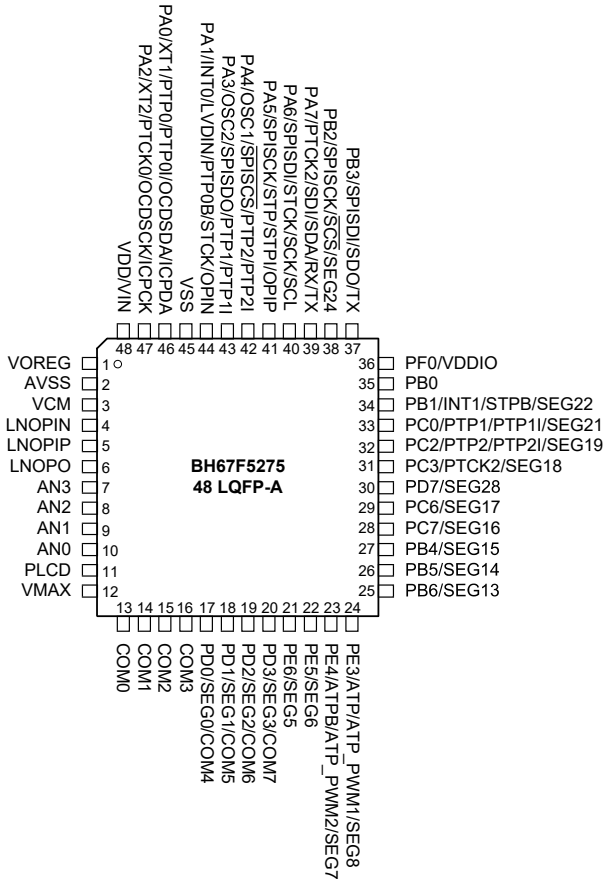
PB3/SPISDI/SDO/TX
PB2/SPISCK/SCS/SEG24
PA7/PTCK2/SDI/SDA/RX/TX
PA6/SPISDI/STCK/SCK/SCL
PA5/SPISCK/STP/STPI/OPIP
PA4/OSC1/SPISCS/PTP2/PTP2I
PA3/OSC2/SPISDO/PTP1/PTP1I
PA1/INT0/LVDIN/PTP0B/STCK/OPIN
VSS
PA0/XT1/PTP0/PTP0I/OCDSDA/ICPDA
PA2/XT2/PTCK0/OCDSCK/ICPCK
VDD/VIN
48 47 46 45 44 43 42 41 40 39 38 37
VOREG 1
AVSS 2
VCM 3
LNOPIN 4
LNOPIP 5
LNOPO 6
AN3 7
AN2 8
AN1 9
AN0 10
PLCD 11
VMAX 12
BH67F5275
48 LQFP-A
36 PF0/VDDIO
35 PB0
34 PB1/INT1/STPB/SEG22
33 PC0/PTP1/PTP1I/SEG21
32 PC2/PTP2/PTP2I/SEG19
31 PC3/PTCK2/SEG18
30 PD7/SEG28
29 PC6/SEG17
28 PC7/SEG16
27 PB4/SEG15
26 PB5/SEG14
25 PB6/SEG13
13 14 15 16 17 18 19 20 21 22 23 24
COM0
COM1
COM2
COM3
PD0/SEG0/COM4
PD1/SEG1/COM5
PD2/SEG2/COM6
PD3/SEG3/COM7
PE6/SEG5
PE5/SEG6
PE4/ATPB/ATP_PWM2/SEG7
PE3/ATP/ATP_PWM1/SEG8

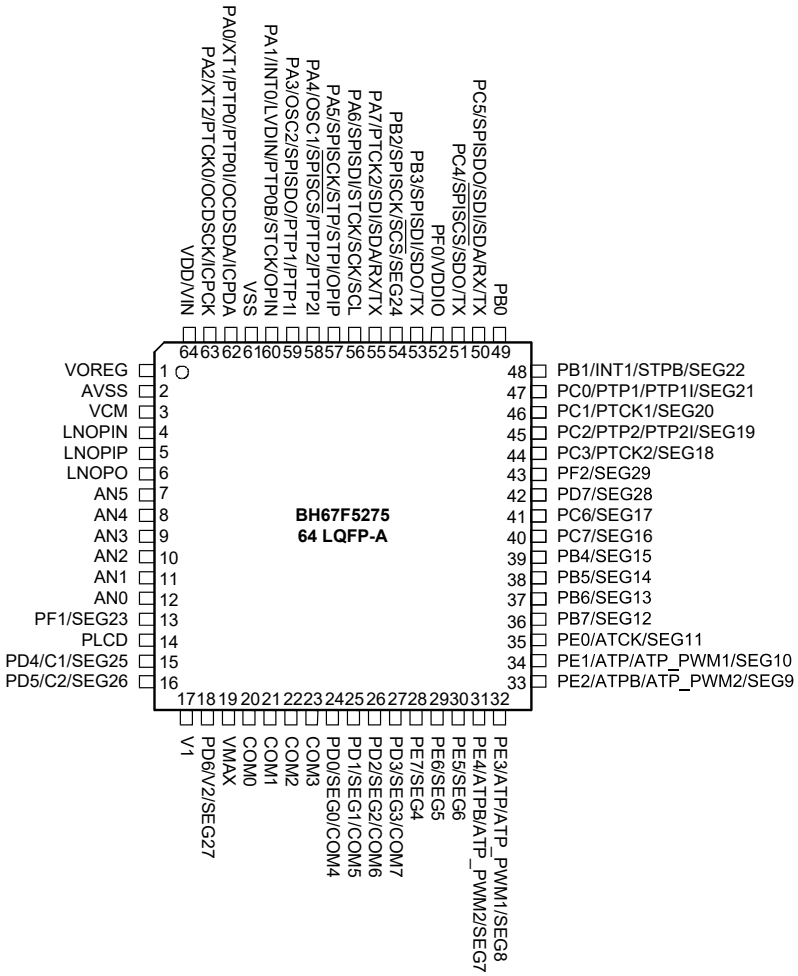
BH67F5275
64 LQFP-A
1 VOREG
2 AVSS
3 VCM
4 LNOPIN
5 LNOPIP
6 LNOPO
7 AN5
8 AN4
9 AN3
10 AN2
11 AN1
12 AN0
13 PF1/SEG23
14 PLCD
15 PD4/C1/SEG25
16 PD5/C2/SEG26
17 V1
18 PD6/V2/SEG27
19 VMAX
20 COM0
21 COM1
22 COM2
23 COM3
24 PD0/SEG0/COM4
25 PD1/SEG1/COM5
26 PD2/SEG2/COM6
27 PD3/SEG3/COM7
28 PE7/SEG4
29 PE6/SEG5
30 PE5/SEG6
31 PE4/ATPB/ATP_PWM2/SEG7
32 PE3/ATP/ATP_PWM1/SEG8
33 PE2/ATPB/ATP_PWM2/SEG9
34 PE1/ATP/ATP_PWM1/SEG10
35 PE0/ATCK/SEG11
36 PB7/SEG12
37 PB6/SEG13
38 PB5/SEG14
39 PB4/SEG15
40 PC7/SEG16
41 PC6/SEG17
42 PD7/SEG28
43 PF2/SEG29
44 PC3/PTCK2/SEG18
45 PC2/PTP2/PTP2I/SEG19
46 PC1/PTCK1/SEG20
47 PC0/PTP1/PTP1I/SEG21
48 PB1/INT1/STPB/SEG22
49 PB0
50 PC5/SPISDO/SDI/SDA/RX/TX
51 PC4/SPISCS/SDO/TX
52 PF0/VDDIO
53 PB3/SPISDI/SDO/TX
54 PB2/SPISCK/SCS/SEG24
55 PA7/PTCK2/SDI/SDA/RX/TX
56 PA6/SPISDI/STCK/SCK/SCL
57 PA5/SPISCK/STP/STPI/OPIP
58 PA4/OSC1/SPISCS/PTP2/PTP2I
59 PA3/OSC2/SPISDO/PTP1/PTP1I
60 PA1/INT0/LVDIN/PTP0B/STCK/OPIN
61 VSS
62 PA0/XT1/PTP0/PTP0I/OCDSDA/ICPDA
63 PA2/XT2/PTCK0/OCDSCK/ICPCK
64 VDD/VIN

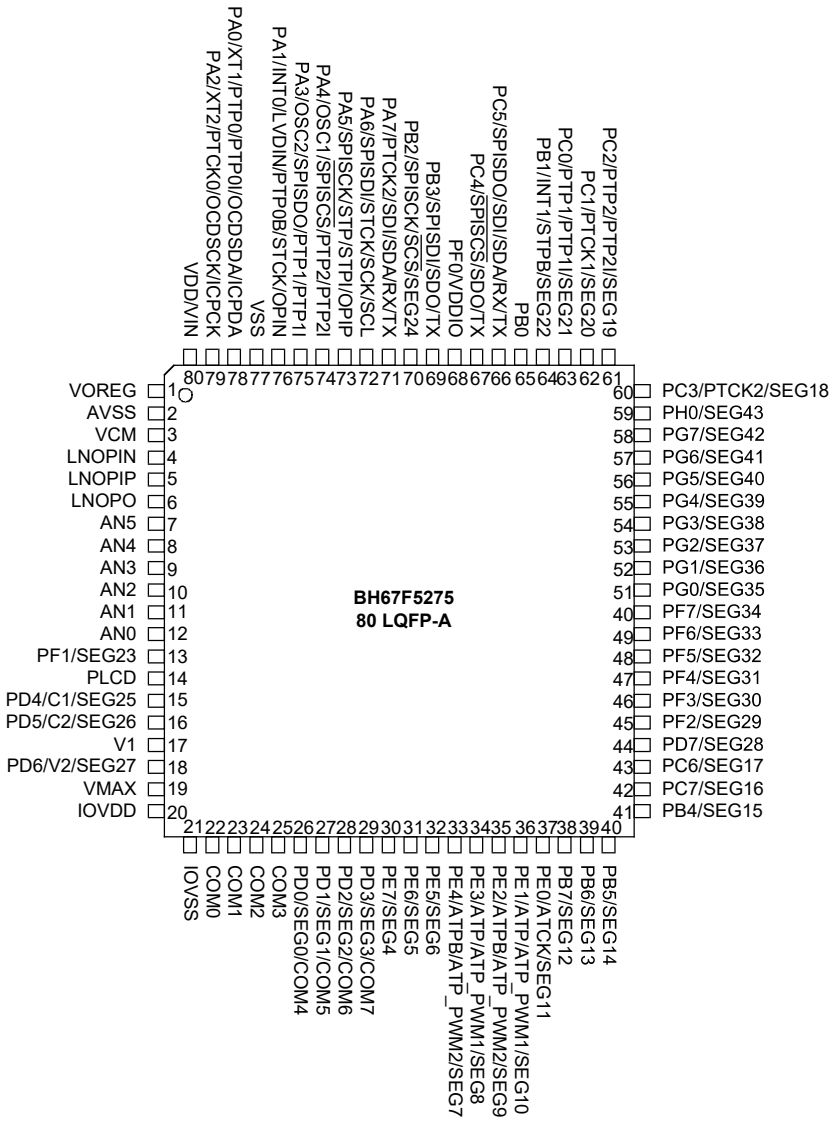

Note: 1. If the pin-shared pin functions have multiple outputs, the desired pin-shared function is determined by the corresponding software control bits.

2. The OCDSDA and OCDSCK pins are supplied for the OCDS dedicated pins and as such only available for the BH67F5275 device and the BH67V5265 device which is the OCDS EV chip for the BH67F5265 device.

3. For less pin-count package types there will be unbonded pins which should be properly configured to avoid unwanted current consumption resulting from floating input conditions. Refer to the “Standby Current Considerations” and “Input/Output Ports” sections.

Pin Description

The function of each pin is listed in the following table, however the details behind how each pin is configured is contained in other sections of the datasheet. As the Pin Description table shows the situation for the package with the most pins, not all pins in the table will be available on smaller package sizes.

BH67F5265

Pin Name	Function	OPT	I/T	O/T	Description
PA0/XT1/PTP0/PTP0I/ OCDSDA/ICPDA	PA0	PAWU PAPU PAS0	ST	CMOS	General purpose I/O. Register enabled pull-up and wake-up
	XT1	PAS0	AN	—	LXT oscillator pin
	PTP0	PAS0	—	CMOS	PTM0 output
	PTP0I	PAS0	ST	—	PTM0 capture input
	OCDSDA	—	ST	CMOS	OCDS data/address pin, for EV chip only
	ICPDA	—	ST	CMOS	ICP data/address pin
PA1/INT0/LVDIN/PTP0B/ STCK/OPIN	PA1	PAWU PAPU PAS0	ST	CMOS	General purpose I/O. Register enabled pull-up and wake-up
	INT0	PAS0 INTEG INTC0	ST	—	External Interrupt 0 input
	LVDIN	PAS0	AN	—	LVD external input
	PTP0B	PAS0	—	CMOS	PTM0 inverted output
	STCK	PAS0 IFS0	ST	—	STM clock input
	OPIN	PAS0	AN	—	VCM_OPA negative input
PA2/XT2/PTCK0/OCDSCK/ ICPCK	PA2	PAWU PAPU PAS0	ST	CMOS	General purpose I/O. Register enabled pull-up and wake-up
	XT2	PAS0	—	AN	LXT oscillator pin
	PTCK0	PAS0	ST	—	PTM0 clock input
	OCDSCK	—	ST	—	OCDS clock pin, for EV chip only
	ICPCK	—	ST	—	ICP clock pin
PA3/OSC2/SPISDO/PTP1/ PTP1I	PA3	PAWU PAPU PAS0	ST	CMOS	General purpose I/O. Register enabled pull-up and wake-up
	OSC2	PAS0	—	AN	HXT oscillator pin
	SPISDO	PAS0	—	CMOS	SPI data output
	PTP1	PAS0	—	CMOS	PTM1 output
	PTP1I	PAS0 IFS0	ST	—	PTM1 capture input
PA4/OSC1/$\overline{\text{SPISCS}}$/PTP2/ PTP2I	PA4	PAWU PAPU PAS1	ST	CMOS	General purpose I/O. Register enabled pull-up and wake-up
	OSC1	PAS1	AN	—	HXT oscillator pin
	$\overline{\text{SPISCS}}$	PAS1 IFS1	ST	CMOS	SPI slave select
	PTP2	PAS1	—	CMOS	PTM2 output
	PTP2I	PAS1 IFS0	ST	—	PTM2 capture input

Pin Name	Function	OPT	I/T	O/T	Description
PA5/SPISCK/STP/STPI/OPIP	PA5	PAWU PAPU PAS1	ST	CMOS	General purpose I/O. Register enabled pull-up and wake-up
	SPISCK	PAS1 IFS1	ST	CMOS	SPI serial clock
	STP	PAS1	—	CMOS	STM output
	STPI	PAS1	ST	—	STM capture input
	OPIP	PAS1	AN	—	VCM_OPA positive input
PA6/SPISDI/STCK/SCK/SCL	PA6	PAWU PAPU PAS1	ST	CMOS	General purpose I/O. Register enabled pull-up and wake-up
	SPISDI	PAS1 IFS1	ST	—	SPI data input
	STCK	PAS1 IFS0	ST	—	STM clock input
	SCK	PAS1	ST	CMOS	SIM SPI serial clock
	SCL	PAS1	ST	NMOS	SIM I^2C clock line
PA7/PTCK2/SDI/SDA/RX/TX	PA7	PAWU PAPU PAS1	ST	CMOS	General purpose I/O. Register enabled pull-up and wake-up
	PTCK2	PAS1 IFS0	ST	—	PTM2 clock input
	SDI	PAS1 IFS1	ST	—	SIM SPI data input
	SDA	PAS1 IFS1	ST	NMOS	SIM I^2C data line
	RX/TX	PAS1 IFS1	ST	CMOS	UART serial data input in full-duplex communication or UART serial data input/output in Single Wire Mode communication
PB0	PB0	PBPU	ST	CMOS	General purpose I/O. Register enabled pull-up
PB1/INT1/STPB/SEG22	PB1	PBPU PBS0	ST	CMOS	General purpose I/O. Register enabled pull-up
	INT1	PBS0 INTEG INTC0	ST	—	External Interrupt 1 input
	STPB	PBS0	—	CMOS	STM inverted output
	SEG22	PBS0	—	AN	LCD segment output
PB2/SPISCK/$\overline{SCS}$/SEG24	PB2	PBPU PBS0	ST	CMOS	General purpose I/O. Register enabled pull-up
	SPISCK	PBS0 IFS1	ST	CMOS	SPI serial clock
	$\overline{SCS}$	PBS0	ST	CMOS	SIM SPI slave select
	SEG24	PBS0	—	AN	LCD segment output
PB3/SPISDI/SDO/TX	PB3	PBPU PBS0	ST	CMOS	General purpose I/O. Register enabled pull-up
	SPISDI	PBS0 IFS1	ST	—	SPI data input
	SDO	PBS0	—	CMOS	SIM SPI data output
	TX	PBS0	—	CMOS	UART serial data output
PB4/SEG15	PB4	PBPU PBS1	ST	CMOS	General purpose I/O. Register enabled pull-up
	SEG15	PBS1	—	AN	LCD segment output

Pin Name	Function	OPT	I/T	O/T	Description
PB5/SEG14	PB5	PBPU PBS1	ST	CMOS	General purpose I/O. Register enabled pull-up
	SEG14	PBS1	—	AN	LCD segment output
PB6/SEG13	PB6	PBPU PBS1	ST	CMOS	General purpose I/O. Register enabled pull-up
	SEG13	PBS1	—	AN	LCD segment output
PB7/SEG12	PB7	PBPU PBS1	ST	CMOS	General purpose I/O. Register enabled pull-up
	SEG12	PBS1	—	AN	LCD segment output
PC0/PTP1/PTP1I/SEG21	PC0	PCPU PCS0	ST	CMOS	General purpose I/O. Register enabled pull-up
	PTP1	PCS0	—	CMOS	PTM1 output
	PTP1I	PCS0 IFS0	ST	—	PTM1 capture input
	SEG21	PCS0	—	AN	LCD segment output
PC1/PTCK1/SEG20	PC1	PCPU PCS0	ST	CMOS	General purpose I/O. Register enabled pull-up
	PTCK1	PCS0	ST	—	PTM1 clock input
	SEG20	PCS0	—	AN	LCD segment output
PC2/PTP2/PTP2I/SEG19	PC2	PCPU PCS0	ST	CMOS	General purpose I/O. Register enabled pull-up
	PTP2	PCS0	—	CMOS	PTM2 output
	PTP2I	PCS0 IFS0	ST	—	PTM2 capture input
	SEG19	PCS0	—	AN	LCD segment output
PC3/PTCK2/SEG18	PC3	PCPU PCS0	ST	CMOS	General purpose I/O. Register enabled pull-up
	PTCK2	PCS0 IFS0	ST	—	PTM2 clock input
	SEG18	PCS0	—	AN	LCD segment output
PC4/$\overline{\text{SPISCS}}$/SDO/TX	PC4	PCPU PCS1	ST	CMOS	General purpose I/O. Register enabled pull-up
	$\overline{\text{SPISCS}}$	PCS1 IFS1	ST	CMOS	SPI slave select
	SDO	PCS1	—	CMOS	SIM SPI data output
	TX	PCS1	—	CMOS	UART serial data output
PC5/SPISDO/SDI/SDA/ RX/TX	PC5	PCPU PCS1	ST	CMOS	General purpose I/O. Register enabled pull-up
	SPISDO	PCS1	—	CMOS	SPI data output
	SDI	PCS1 IFS1	ST	—	SIM SPI data input
	SDA	PCS1 IFS1	ST	NMOS	SIM I^2C data line
	RX/TX	PCS1 IFS1	ST	CMOS	UART serial data input in full-duplex communication or UART serial data input/output in Single Wire Mode communication
PC6/SEG17	PC6	PCPU PCS1	ST	CMOS	General purpose I/O. Register enabled pull-up
	SEG17	PCS1	—	AN	LCD segment output
PC7/SEG16	PC7	PCPU PCS1	ST	CMOS	General purpose I/O. Register enabled pull-up
	SEG16	PCS1	—	AN	LCD segment output

Pin Name	Function	OPT	I/T	O/T	Description
PD0/SEG0/COM4	PD0	PDPU PDS0	ST	CMOS	General purpose I/O. Register enabled pull-up
	SEG0	PDS0	—	AN	LCD segment output
	COM4	PDS0	—	COM	LCD common output
PD1/SEG1/COM5	PD1	PDPU PDS0	ST	CMOS	General purpose I/O. Register enabled pull-up
	SEG1	PDS0	—	AN	LCD segment output
	COM5	PDS0	—	COM	LCD common output
PD2/SEG2/COM6	PD2	PDPU PDS0	ST	CMOS	General purpose I/O. Register enabled pull-up
	SEG2	PDS0	—	AN	LCD segment output
	COM6	PDS0	—	COM	LCD common output
PD3/SEG3/COM7	PD3	PDPU PDS0	ST	CMOS	General purpose I/O. Register enabled pull-up
	SEG3	PDS0	—	AN	LCD segment output
	COM7	PDS0	—	COM	LCD common output
PD4/SEG25/C1	PD4	PDPU PDS1	ST	CMOS	General purpose I/O. Register enabled pull-up
	C1	PDS1	AN	—	LCD voltage pump
	SEG25	PDS1	—	AN	LCD segment output
PD5/SEG26/C2	PD5	PDPU PDS1	ST	CMOS	General purpose I/O. Register enabled pull-up
	C2	PDS1	AN	—	LCD voltage pump
	SEG26	PDS1	—	AN	LCD segment output
PD6/SEG27/V2	PD6	PDPU PDS1	ST	CMOS	General purpose I/O. Register enabled pull-up
	SEG27	PDS1	—	AN	LCD segment output
	V2	PDS1	PWR	AN	LCD voltage pump
PD7/SEG28	PD7	PDPU PDS1	ST	CMOS	General purpose I/O. Register enabled pull-up
	SEG28	PDS1	—	AN	LCD segment output
PE0/SEG11	PE0	PEPU PES0	ST	CMOS	General purpose I/O. Register enabled pull-up
	SEG11	PES0	—	AN	LCD segment output
PE1/SEG10	PE1	PEPU PES0	ST	CMOS	General purpose I/O. Register enabled pull-up
	SEG10	PES0	—	AN	LCD segment output
PE2/SEG9	PE2	PEPU PES0	ST	CMOS	General purpose I/O. Register enabled pull-up
	SEG9	PES0	—	AN	LCD segment output
PE3/SEG8	PE3	PEPU PES0	ST	CMOS	General purpose I/O. Register enabled pull-up
	SEG8	PES0	—	AN	LCD segment output
PE4/SEG7	PE4	PEPU PES1	ST	CMOS	General purpose I/O. Register enabled pull-up
	SEG7	PES1	—	AN	LCD segment output
PE5/SEG6	PE5	PEPU PES1	ST	CMOS	General purpose I/O. Register enabled pull-up
	SEG6	PES1	—	AN	LCD segment output

Pin Name	Function	OPT	I/T	O/T	Description
PE6/SEG5	PE6	PEPU PES1	ST	CMOS	General purpose I/O. Register enabled pull-up
	SEG5	PES1	—	AN	LCD segment output
PE7/SEG4	PE7	PEPU PES1	ST	CMOS	General purpose I/O. Register enabled pull-up
	SEG4	PES1	—	AN	LCD segment output
PF0/VDDIO	PF0	PFPU PFS0	ST	CMOS	General purpose I/O. Register enabled pull-up
	VDDIO	PFS0 PMPS	PWR	—	Positive power supply for PA6~PA7, PB2~PB3 and PC4~PC5 pins
PF1/SEG23	PF1	PFPU PFS0	ST	CMOS	General purpose I/O. Register enabled pull-up
	SEG23	PFS0	—	AN	LCD segment output
PF2/SEG29	PF2	PFPU PFS0	ST	CMOS	General purpose I/O. Register enabled pull-up
	SEG29	PFS0	—	AN	LCD segment output
VMAX	VMAX	—	PWR	—	IC maximum voltage, connected to VDD or V1
PLCD	PLCD	—	PWR	AN	LCD power supply
V1	V1	—	PWR	AN	LCD voltage pump
COM0~COM3	COMn	—	—	AN	LCD common output
VOREG	VOREG	—	—	PWR	LDO output pin
		—	PWR	—	Positive power supply for A/D Converter and PGA
AVSS	AVSS	—	PWR	—	Negative power supply for VCM, A/D Converter and PGA
AN0~AN5	ANn	—	AN	—	A/D Converter external input channel
VCM	VCM	—	AN	—	A/D Converter common mode external input voltage
		—	—	AN	A/D Converter common mode voltage output and VCM_OPA output
LNOPO	LNOPO	—	—	AN	Low noise OPA output
LNOPIP	LNOPIP	—	AN	—	Low noise OPA positive input
LNOPIN	LNOPIN	—	AN	—	Low noise OPA negative input
VDD/VIN	VDD	—	PWR	—	Positive power supply
	VIN	—	PWR	—	LDO input pin
VSS	VSS	—	PWR	—	Negative power supply, ground

Legend: I/T: Input type;
PWR: Power;
CMOS: CMOS output;
ST: Schmitt Trigger input;
O/T: Output type;
OPT: Optional by register option;
NMOS: NMOS output;
AN: Analog signal.

BH67F5275

Pin Name	Function	OPT	I/T	O/T	Description
PA0/XT1/PTP0/PTP0I/ OCDSDA/ICPDA	PA0	PAWU PAPU PAS0	ST	CMOS	General purpose I/O. Register enabled pull-up and wake-up
	XT1	PAS0	AN	—	LXT oscillator pin
	PTP0	PAS0	—	CMOS	PTM0 output
	PTP0I	PAS0	ST	—	PTM0 capture input
	OCDSDA	—	ST	CMOS	OCDS data/address pin
	ICPDA	—	ST	CMOS	ICP data/address pin
PA1/INT0/LVDIN/ PTP0B/STCK/OPIN	PA1	PAWU PAPU PAS0	ST	CMOS	General purpose I/O. Register enabled pull-up and wake-up
	INT0	PAS0 INTEG INTC0	ST	—	External Interrupt 0 input
	LVDIN	PAS0	AN	—	LVD external input
	PTP0B	PAS0	—	CMOS	PTM0 inverted output
	STCK	PAS0 IFS0	ST	—	STM clock input
	OPIN	PAS0	AN	—	VCM_OPA negative input
PA2/XT2/PTCK0/ OCDSCK/ICPCK	PA2	PAWU PAPU PAS0	ST	CMOS	General purpose I/O. Register enabled pull-up and wake-up
	XT2	PAS0	—	AN	LXT oscillator pin
	PTCK0	PAS0	ST	—	PTM0 clock input
	OCDSCK	—	ST	—	OCDS clock pin
	ICPCK	—	ST	—	ICP clock pin
PA3/OSC2/SPISDO/ PTP1/PTP1I	PA3	PAWU PAPU PAS0	ST	CMOS	General purpose I/O. Register enabled pull-up and wake-up
	OSC2	PAS0	—	AN	HXT oscillator pin
	SPISDO	PAS0	—	CMOS	SPI data output
	PTP1	PAS0	—	CMOS	PTM1 output
	PTP1I	PAS0 IFS0	ST	—	PTM1 capture input
PA4/OSC1/ $\overline{\text{SPISCS}}$ PTP2/PTP2I	PA4	PAWU PAPU PAS1	ST	CMOS	General purpose I/O. Register enabled pull-up and wake-up
	OSC1	PAS1	AN	—	HXT oscillator pin
	$\overline{\text{SPISCS}}$	PAS1 IFS1	ST	CMOS	SPI slave select
	PTP2	PAS1	—	CMOS	PTM2 output
	PTP2I	PAS1 IFS0	ST	—	PTM2 capture input
PA5/SPISCK/STP/ STPI/OPIP	PA5	PAWU PAPU PAS1	ST	CMOS	General purpose I/O. Register enabled pull-up and wake-up
	SPISCK	PAS1 IFS1	ST	CMOS	SPI serial clock
	STP	PAS1	—	CMOS	STM output
	STPI	PAS1	ST	—	STM capture input
	OPIP	PAS1	AN	—	VCM_OPA positive input

Pin Name	Function	OPT	I/T	O/T	Description
PA6/SPISDI/STCK/SCK/SCL	PA6	PAWU PAPU PAS1	ST	CMOS	General purpose I/O. Register enabled pull-up and wake-up
	SPISDI	PAS1 IFS1	ST	—	SPI data input
	STCK	PAS1 IFS0	ST	—	STM clock input
	SCK	PAS1	ST	CMOS	SIM SPI serial clock
	SCL	PAS1	ST	NMOS	SIM I^2C clock line
PA7/PTCK2/SDI/SDA/RX/TX	PA7	PAWU PAPU PAS1	ST	CMOS	General purpose I/O. Register enabled pull-up and wake-up
	PTCK2	PAS1 IFS0	ST	—	PTM2 clock input
	SDI	PAS1 IFS1	ST	—	SIM SPI data input
	SDA	PAS1 IFS1	ST	NMOS	SIM I^2C data line
	RX/TX	PAS1 IFS1	ST	CMOS	UART serial data input in full-duplex communication or UART serial data input/output in Single Wire Mode communication
PB0	PB0	PBPU	ST	CMOS	General purpose I/O. Register enabled pull-up
PB1/INT1/STPB/SEG22	PB1	PBPU PBS0	ST	CMOS	General purpose I/O. Register enabled pull-up
	INT1	PBS0 INTEG INTC0	ST	—	External Interrupt 1 input
	STPB	PBS0	—	CMOS	STM inverted output
	SEG22	PBS0	—	AN	LCD segment output
PB2/SPISCK/$\overline{SCS}$/SEG24	PB2	PBPU PBS0	ST	CMOS	General purpose I/O. Register enabled pull-up
	SPISCK	PBS0 IFS1	ST	CMOS	SPI serial clock
	$\overline{SCS}$	PBS0	ST	CMOS	SIM SPI slave select
	SEG24	PBS0	—	AN	LCD segment output
PB3/SPISDI/SDO/TX	PB3	PBPU PBS0	ST	CMOS	General purpose I/O. Register enabled pull-up
	SPISDI	PBS0 IFS1	ST	—	SPI data input
	SDO	PBS0	—	CMOS	SIM SPI data output
	TX	PBS0	—	CMOS	UART serial data output
PB4/SEG15	PB4	PBPU PBS1	ST	CMOS	General purpose I/O. Register enabled pull-up
	SEG15	PBS1	—	AN	LCD segment output
PB5/SEG14	PB5	PBPU PBS1	ST	CMOS	General purpose I/O. Register enabled pull-up
	SEG14	PBS1	—	AN	LCD segment output
PB6/SEG13	PB6	PBPU PBS1	ST	CMOS	General purpose I/O. Register enabled pull-up
	SEG13	PBS1	—	AN	LCD segment output
PB7/SEG12	PB7	PBPU PBS1	ST	CMOS	General purpose I/O. Register enabled pull-up
	SEG12	PBS1	—	AN	LCD segment output

Pin Name	Function	OPT	I/T	O/T	Description
PC0/PTP1/PTP1I/SEG21	PC0	PCPU PCS0	ST	CMOS	General purpose I/O. Register enabled pull-up
	PTP1	PCS0	—	CMOS	PTM1 output
	PTP1I	PCS0 IFS0	ST	—	PTM1 capture input
	SEG21	PCS0	—	AN	LCD segment output
PC1/PTCK1/SEG20	PC1	PCPU PCS0	ST	CMOS	General purpose I/O. Register enabled pull-up
	PTCK1	PCS0	ST	—	PTM1 clock input
	SEG20	PCS0	—	AN	LCD segment output
PC2/PTP2/PTP2I/SEG19	PC2	PCPU PCS0	ST	CMOS	General purpose I/O. Register enabled pull-up
	PTP2	PCS0	—	CMOS	PTM2 output
	PTP2I	PCS0 IFS0	ST	—	PTM2 capture input
	SEG19	PCS0	—	AN	LCD segment output
PC3/PTCK2/SEG18	PC3	PCPU PCS0	ST	CMOS	General purpose I/O. Register enabled pull-up
	PTCK2	PCS0 IFS0	ST	—	PTM2 clock input
	SEG18	PCS0	—	AN	LCD segment output
PC4/$\overline{\text{SPISCS}}$/SDO/TX	PC4	PCPU PCS1	ST	CMOS	General purpose I/O. Register enabled pull-up
	$\overline{\text{SPISCS}}$	PCS1 IFS1	ST	CMOS	SPI slave select
	SDO	PCS1	—	CMOS	SIM SPI data output
	TX	PCS1	—	CMOS	UART serial data output
PC5/SPISDO/SDI/SDA/RX/TX	PC5	PCPU PCS1	ST	CMOS	General purpose I/O. Register enabled pull-up
	SPISDO	PCS1	—	CMOS	SPI data output
	SDI	PCS1 IFS1	ST	—	SIM SPI data input
	SDA	PCS1 IFS1	ST	NMOS	SIM I^2C data line
	RX/TX	PCS1 IFS1	ST	CMOS	UART serial data input in full-duplex communication or UART serial data input/output in Single Wire Mode communication
PC6/SEG17	PC6	PCPU PCS1	ST	CMOS	General purpose I/O. Register enabled pull-up
	SEG17	PCS1	—	AN	LCD segment output
PC7/SEG16	PC7	PCPU PCS1	ST	CMOS	General purpose I/O. Register enabled pull-up
	SEG16	PCS1	—	AN	LCD segment output
PD0/SEG0/COM4	PD0	PDPU PDS0	ST	CMOS	General purpose I/O. Register enabled pull-up
	SEG0	PDS0	—	AN	LCD segment output
	COM4	PDS0	—	COM	LCD common output
PD1/SEG1/COM5	PD1	PDPU PDS0	ST	CMOS	General purpose I/O. Register enabled pull-up
	SEG1	PDS0	—	AN	LCD segment output
	COM5	PDS0	—	COM	LCD common output

Pin Name	Function	OPT	I/T	O/T	Description
PD2/SEG2/COM6	PD2	PDPU PDS0	ST	CMOS	General purpose I/O. Register enabled pull-up
	SEG2	PDS0	—	AN	LCD segment output
	COM6	PDS0	—	COM	LCD common output
PD3/SEG3/COM7	PD3	PDPU PDS0	ST	CMOS	General purpose I/O. Register enabled pull-up
	SEG3	PDS0	—	AN	LCD segment output
	COM7	PDS0	—	COM	LCD common output
PD4/SEG25/C1	PD4	PDPU PDS1	ST	CMOS	General purpose I/O. Register enabled pull-up
	C1	PDS1	AN	—	LCD voltage pump
	SEG25	PDS1	—	AN	LCD segment output
PD5/SEG26/C2	PD5	PDPU PDS1	ST	CMOS	General purpose I/O. Register enabled pull-up
	C2	PDS1	AN	—	LCD voltage pump
	SEG26	PDS1	—	AN	LCD segment output
PD6/SEG27/V2	PD6	PDPU PDS1	ST	CMOS	General purpose I/O. Register enabled pull-up
	SEG27	PDS1	—	AN	LCD segment output
	V2	PDS1	PWR	AN	LCD voltage pump
PD7/SEG28	PD7	PDPU PDS1	ST	CMOS	General purpose I/O. Register enabled pull-up
	SEG28	PDS1	—	AN	LCD segment output
PE0/ATCK/SEG11	PE0	PEPU PES0	ST	CMOS	General purpose I/O. Register enabled pull-up
	ATCK	PES0	ST	—	ATM clock input
	SEG11	PES0	—	AN	LCD segment output
PE1/ATP/ATP_PWM1/ SEG10	PE1	PEPU PES0	ST	CMOS	General purpose I/O. Register enabled pull-up
	ATP/ ATP_PWM1	PES0	—	CMOS	ATM output / ATM Audio PWM Output Mode output 1
	SEG10	PES0	—	AN	LCD segment output
PE2/ATPB/ATP_PWM2/ SEG9	PE2	PEPU PES0	ST	CMOS	General purpose I/O. Register enabled pull-up
	ATPB/ ATP_PWM2	PES0	—	CMOS	ATM inverted output / ATM Audio PWM Output Mode output 2
	SEG9	PES0	—	AN	LCD segment output
PE3/ATP/ATP_PWM1/ SEG8	PE3	PEPU PES0	ST	CMOS	General purpose I/O. Register enabled pull-up
	ATP/ ATP_PWM1	PES0	—	CMOS	ATM output / ATM Audio PWM Output Mode output 1
	SEG8	PES0	—	AN	LCD segment output
PE4/ATPB/ATP_PWM2/ SEG7	PE4	PEPU PES1	ST	CMOS	General purpose I/O. Register enabled pull-up
	ATPB/ ATP_PWM2	PES1	—	CMOS	ATM inverted output / ATM Audio PWM Output Mode output 2
	SEG7	PES1	—	AN	LCD segment output
PE5/SEG6	PE5	PEPU PES1	ST	CMOS	General purpose I/O. Register enabled pull-up
	SEG6	PES1	—	AN	LCD segment output

Pin Name	Function	OPT	I/T	O/T	Description
PE6/SEG5	PE6	PEPU PES1	ST	CMOS	General purpose I/O. Register enabled pull-up
	SEG5	PES1	—	AN	LCD segment output
PE7/SEG4	PE7	PEPU PES1	ST	CMOS	General purpose I/O. Register enabled pull-up
	SEG4	PES1	—	AN	LCD segment output
PF0/VDDIO	PF0	PFPU PFS0	ST	CMOS	General purpose I/O. Register enabled pull-up
	VDDIO	PFS0 PMPS	PWR	—	Positive power supply for PA6~PA7, PB2~PB3 and PC4~PC5 pins
PF1/SEG23	PF1	PFPU PFS0	ST	CMOS	General purpose I/O. Register enabled pull-up
	SEG23	PFS0	—	AN	LCD segment output
PF2/SEG29	PF2	PFPU PFS0	ST	CMOS	General purpose I/O. Register enabled pull-up
	SEG29	PFS0	—	AN	LCD segment output
PF3/SEG30	PF3	PFPU PFS0	ST	CMOS	General purpose I/O. Register enabled pull-up
	SEG30	PFS0	—	AN	LCD segment output
PF4/SEG31	PF4	PFPU PFS1	ST	CMOS	General purpose I/O. Register enabled pull-up
	SEG31	PFS1	—	AN	LCD segment output
PF5/SEG32	PF5	PFPU PFS1	ST	CMOS	General purpose I/O. Register enabled pull-up
	SEG32	PFS1	—	AN	LCD segment output
PF6/SEG33	PF6	PFPU PFS1	ST	CMOS	General purpose I/O. Register enabled pull-up
	SEG33	PFS1	—	AN	LCD segment output
PF7/SEG34	PF7	PFPU PFS1	ST	CMOS	General purpose I/O. Register enabled pull-up
	SEG34	PFS1	—	AN	LCD segment output
PG0/SEG35	PG0	PGPU PGS0	ST	CMOS	General purpose I/O. Register enabled pull-up
	SEG35	PFS1	—	AN	LCD segment output
PG1/SEG36	PG1	PGPU PGS0	ST	CMOS	General purpose I/O. Register enabled pull-up
	SEG36	PFS1	—	AN	LCD segment output
PG2/SEG37	PG2	PGPU PGS0	ST	CMOS	General purpose I/O. Register enabled pull-up
	SEG37	PFS1	—	AN	LCD segment output
PG3/SEG38	PG3	PGPU PGS0	ST	CMOS	General purpose I/O. Register enabled pull-up
	SEG38	PFS1	—	AN	LCD segment output
PG4/SEG39	PG4	PGPU PGS1	ST	CMOS	General purpose I/O. Register enabled pull-up
	SEG39	PGS1	—	AN	LCD segment output
PG5/SEG40	PG5	PGPU PGS1	ST	CMOS	General purpose I/O. Register enabled pull-up
	SEG40	PGS1	—	AN	LCD segment output
PG6/SEG41	PG6	PGPU PGS1	ST	CMOS	General purpose I/O. Register enabled pull-up
	SEG41	PGS1	—	AN	LCD segment output

Pin Name	Function	OPT	I/T	O/T	Description
PG7/SEG42	PG7	PGPU PGS1	ST	CMOS	General purpose I/O. Register enabled pull-up
	SEG42	PGS1	—	AN	LCD segment output
PH0/SEG43	PH0	PHPU PHS0	ST	CMOS	General purpose I/O. Register enabled pull-up
	SEG43	PHS0	—	AN	LCD segment output
VMAX	VMAX	—	PWR	—	IC maximum voltage, connected to VDD or V1
PLCD	PLCD	—	PWR	AN	LCD power supply
V1	V1	—	PWR	AN	LCD voltage pump
COM0~COM3	COMn	—	—	AN	LCD common output
VOREG	VOREG	—	—	PWR	LDO output pin
		—	PWR	—	Positive power supply for A/D Converter and PGA
AVSS	AVSS	—	PWR	—	Negative power supply for VCM, A/D Converter and PGA
AN0~AN5	ANn	—	AN	—	A/D Converter external input channel
VCM	VCM	—	AN	—	A/D Converter common mode external input voltage
		—	—	AN	A/D Converter common mode voltage output and VCM_OPA output
LNOPO	LNOPO	—	—	AN	Low noise OPA output
LNOPIP	LNOPIP	—	AN	—	Low noise OPA positive input
LNOPIN	LNOPIN	—	AN	—	Low noise OPA negative input
VDD/VIN	VDD	—	PWR	—	Positive power supply
	VIN	—	PWR	—	LDO input pin
VSS	VSS	—	PWR	—	Negative power supply, ground
IOVDD	IOVDD	—	PWR	—	I/O positive power supply
IOVSS	IOVSS	—	PWR	—	I/O negative power supply

Legend: I/T: Input type;
PWR: Power;
CMOS: CMOS output;
ST: Schmitt Trigger input;
O/T: Output type;
OPT: Optional by register option;
NMOS: NMOS output;
AN: Analog signal.

Absolute Maximum Ratings

Supply Voltage ..... V_{SS}-0.3V to 6.0V

Input Voltage ..... V_{SS}-0.3V to V_{DD}+0.3V

Storage Temperature ..... -60°C to 150°C

Operating Temperature ..... -40°C to 85°C

I_{OH} Total ..... -80mA

I_{OL} Total 80mA

Total Power Dissipation 500mW

Note: These are stress ratings only. Stresses exceeding the range specified under "Absolute Maximum Ratings" may cause substantial damage to the devices. Functional operation of the devices at other conditions beyond those listed in the specification is not implied and prolonged exposure to extreme conditions may affect device reliability.

D.C. Characteristics

For data in the following tables, note that factors such as oscillator type, operating voltage, operating frequency, pin load conditions, temperature and program instruction type, etc., can all exert an influence on the measured values.

Operating Voltage Characteristics

Ta=-40°C~85°C

Symbol	Parameter	Test Conditions	Min.	Typ.	Max.	Unit
V_{DD}	Operating Voltage – HXT	f_{SYS}=4MHz	2.2	—	5.5	V
		f_{SYS}=8MHz	2.2	—	5.5	
		f_{SYS}=12MHz	2.7	—	5.5	
		f_{SYS}=16MHz	3.3	—	5.5	
	Operating Voltage – HIRC	f_{SYS}=4MHz	2.2	—	5.5	V
		f_{SYS}=8MHz	2.2	—	5.5	
		f_{SYS}=12MHz	2.7	—	5.5	
	Operating Voltage – LXT	f_{SYS}=32.768kHz	2.2	—	5.5	V
	Operating Voltage – LIRC	f_{SYS}=32kHz	2.2	—	5.5	V

Operating Current Characteristics

Ta=-40°C~85°C

Symbol	Operating Mode	Test Conditions		Min.	Typ.	Max.	Unit
		V_{DD}	Conditions				
I_{DD}	SLOW Mode – LIRC	2.2V	f_{SYS}=32kHz	—	16	24	μA
		3V		—	18	30	
		5V		—	20	40	
	SLOW Mode – LXT	2.2V	f_{SYS}=32.768kHz	—	18	25	μA
		3V		—	20	31	
		5V		—	22	42	
I_{DD}	FAST Mode – HIRC	2.2V	f_{SYS}=4MHz	—	0.3	0.5	mA
		3V		—	0.4	0.6	
		5V		—	0.8	1.2	
		2.2V	f_{SYS}=8MHz	—	0.6	1.0	mA
		3V		—	0.8	1.2	
		5V		—	1.6	2.4	
		2.7V	f_{SYS}=12MHz	—	1.0	1.4	mA
		3V		—	1.2	1.8	
		5V		—	2.4	3.6	
	FAST Mode – HXT	2.2V	f_{SYS}=4MHz	—	0.4	0.6	mA
		3V		—	0.50	0.75	
		5V		—	1.0	1.5	
		2.2V	f_{SYS}=8MHz	—	0.8	1.2	mA
		3V		—	1.0	1.5	
		5V		—	2	3	
		2.7V	f_{SYS}=12MHz	—	1.2	2.2	mA
		3V		—	1.50	2.75	
		5V		—	3.0	4.5	
		3.3V	f_{SYS}=16MHz	—	3.2	4.8	mA
		5V		—	4	6	

Note: When using the characteristic table data, the following notes should be taken into consideration:

1. Any digital inputs are setup in a non floating condition.
2. All measurements are taken under conditions of no load and with all peripherals in an off state.
3. There are no DC current paths.
4. All Operating Current values are measured using a continuous NOP instruction program loop.

Standby Current Characteristics

Ta=25°C, unless otherwise specified

Symbol	Standby Mode	Test Conditions		Min.	Typ.	Max.	Max. @85°C	Unit
		V_{DD}	Conditions					
I_{STB}	SLEEP Mode	2.2V	WDT off	—	0.45	0.80	7.00	μA
		3V		—	0.45	0.90	8.00	
		5V		—	0.5	2.0	10.0	
		2.2V	WDT on	—	1.2	2.4	3.0	μA
		3V		—	1.5	3.0	3.7	
		5V		—	3	5	6	
	IDLE0 Mode – LIRC	2.2V	f_{SUB} on	—	2.4	4.0	4.6	μA
		3V		—	3.0	5.0	5.7	
		5V		—	5	10	11	
	IDLE0 Mode – LXT	2.2V	f_{SUB} on	—	2.4	4.0	4.6	μA
		3V		—	3.0	5.0	5.7	
		5V		—	5	10	11	
I_{STB}	IDLE1 Mode – HIRC	2.2V	f_{SUB} on, f_{SYS}=4MHz	—	144	200	240	μA
		3V		—	180	250	300	
		5V		—	400	600	720	
		2.2V	f_{SUB} on, f_{SYS}=8MHz	—	288	400	480	μA
		3V		—	360	500	600	
		5V		—	600	800	960	
		2.7V	f_{SUB} on, f_{SYS}=12MHz	—	432	600	720	μA
		3V		—	540	750	900	
		5V		—	800	1200	1440	
	IDLE1 Mode – HXT	2.2V	f_{SUB} on, f_{SYS}=4MHz	—	144	200	240	μA
		3V		—	250	360	430	
		5V		—	650	910	1100	
		2.2V	f_{SUB} on, f_{SYS}=8MHz	—	288	400	480	μA
		3V		—	420	600	720	
		5V		—	800	1200	1440	
		2.7V	f_{SUB} on, f_{SYS}=12MHz	—	600	840	1000	μA
		3V		—	700	980	1200	
		5V		—	1800	2400	2880	
		3.3V	f_{SUB} on, f_{SYS}=16MHz	—	1.0	1.5	1.8	mA
		5V		—	2.0	2.8	3.3	

Note: When using the characteristic table data, the following notes should be taken into consideration:

1. Any digital inputs are setup in a non floating condition.
2. All measurements are taken under conditions of no load and with all peripherals in an off state.
3. There are no DC current paths.
4. All Standby Current values are taken after a HALT instruction execution thus stopping all instruction execution.

A.C. Characteristics

For data in the following tables, note that factors such as oscillator type, operating voltage, operating frequency and temperature etc., can all exert an influence on the measured values.

Internal High Speed Oscillator – HIRC – Frequency Accuracy

During the program writing operation the writer will trim the HIRC oscillator at a user selected HIRC frequency and user selected voltage of either 3V or 5V.

Symbol	Parameter	Test Conditions		Min.	Typ.	Max.	Unit
		V_{DD}	Temp.				
f_{HIRC}	4MHz Writer Trimmed HIRC Frequency	3V/5V	25°C	-1%	4	+1%	MHz
			-40°C~85°C	-2%	4	+2%	
		2.2V~5.5V	25°C	-2.5%	4	+2.5%	
			-40°C~85°C	-3%	4	+3%	
	8MHz Writer Trimmed HIRC Frequency	3V/5V	25°C	-1%	8	+1%	MHz
			-40°C~85°C	-2%	8	+2%	
		2.2V~5.5V	25°C	-2.5%	8	+2.5%	
			-40°C~85°C	-3%	8	+3%	
	12MHz Writer Trimmed HIRC Frequency	5V	25°C	-1%	12	+1%	MHz
			-40°C~85°C	-2%	12	+2%	
		2.7V~5.5V	25°C	-2.5%	12	+2.5%	
			-10°C~50°C	-3%	12	+3%	
			-40°C~85°C	-5%	12	+5%	

Note: 1. The 3V/5V values for VDD are provided as these are the two selectable fixed voltages at which the HIRC frequency is trimmed by the writer.
2. The row below the 3V/5V trim voltage row is provided to show the values for the full V_{DD} range operating voltage. It is recommended that the trim voltage is fixed at 3V for application voltage ranges from 2.2V to 3.6V and fixed at 5V for application voltage ranges from 3.3V to 5.5V.
3. The minimum and maximum tolerance values provided in the table are only for the frequency at which the writer trims the HIRC oscillator. After trimming at this chosen specific frequency any change in HIRC oscillator frequency using the oscillator register control bits by the application program will give a frequency tolerance to within ±20%.

Internal Low Speed Oscillator Characteristics – LIRC

Symbol	Parameter	Test Conditions		Min.	Typ.	Max.	Unit
		V_{DD}	Temp.				
f_{LIRC}	LIRC Frequency	3V	25°C	-2%	32	+2%	kHz
		2.2V~5.5V	-40°C~85°C	-7%	32	+7%	
t_{START}	LIRC Start up Time	—	-40°C~85°C	—	—	100	μs

External Low Speed Crystal Oscillator Characteristics – LXT

Ta=25°C

Symbol	Parameter	Test Conditions		Min.	Typ.	Max.	Unit
		V_{DD}	Conditions				
f_{LXT}	LXT Frequency	2.2V~5.5V	—	—	32.768	—	kHz
t_{START}	LXT Start Up Time	3V	—	—	—	1000	ms
		5V	—	—	—	1000	
Duty Cycle	Duty Cycle	—	—	40	—	60	%
R_{NEG}	Negative Resistance	2.2V	—	3×ESR	—	—	Ω

Note: C1, C2 and R_P are external components. C1=C2=10pF. R_P=10MΩ. C_L=7pF, ESR=30kΩ.

Operating Frequency Characteristic Curves

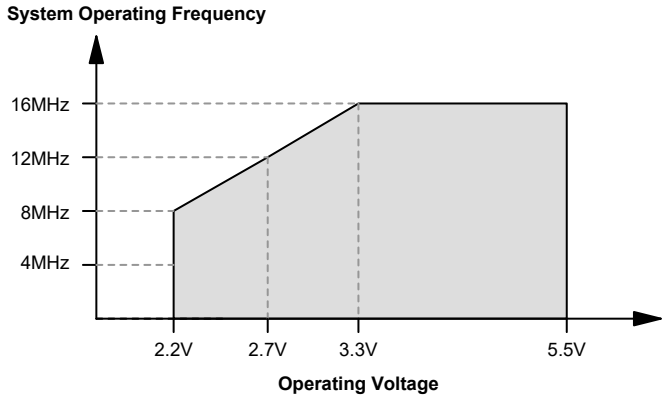

System Start Up Time Characteristics

Ta=-40°C~85°C

Symbol	Parameter	Test Conditions		Min.	Typ.	Max.	Unit
		V_{DD}	Conditions				
t_{SST}	System Start-up Time (Wake-up from Condition where f_{SYS} is off)	—	$f_{SYS}=f_H\sim f_H/64$, $f_H=f_{HXT}$	—	128	—	t_{HXT}
			$f_{SYS}=f_H\sim f_H/64$, $f_H=f_{HIRC}$	—	16	—	t_{HIRC}
			$f_{SYS}=f_{SUB}=f_{LXT}$	—	1024	—	t_{LXT}
			$f_{SYS}=f_{SUB}=f_{LIRC}$	—	2	—	t_{LIRC}
	System Start-up Time (Wake-up from Condition where f_{SYS} is on)	—	$f_{SYS}=f_H\sim f_H/64$, $f_H=f_{HXT}$ or f_{HIRC}	—	2	—	t_H
			$f_{SYS}=f_{SUB}=f_{LXT}$ or f_{LIRC}	—	2	—	t_{SUB}
	System Speed Switch Time (FAST to Slow Mode or SLOW to FAST Mode)	—	f_{HXT} switches from off → on	—	1024	—	t_{HXT}
			f_{HIRC} switches from off → on	—	16	—	t_{HIRC}
			f_{LXT} switches from off → on	—	1024	—	t_{LXT}
t_{RSTD}	System Reset Delay Time (Reset Source from Power-on Reset or LVR Hardware Reset)	—	RR_{POR}=5V/ms	14	16	18	ms
	System Reset Delay Time (LVRC/WDTC/RSTC Software Reset)	—	—				
	System Reset Delay Time (Reset Source from WDT Overflow Reset)	—	—	14	16	18	
t_{SRESET}	Minimum Software Reset Width to Reset	—	—	45	90	120	μs

Note: 1. For the System Start-up time values, whether f_{SYS} is on or off depends upon the mode type and the chosen f_{SYS} system oscillator. Details are provided in the System Operating Modes section.

2. The time units, shown by the symbols t_{HXT}, t_{HIRC} etc. are the inverse of the corresponding frequency values as provided in the frequency tables. For example $t_{HIRC}=1/f_{HIRC}$, $t_{SYS}=1/f_{SYS}$ etc.

3. If the LIRC is used as the system clock and if it is off when in the SLEEP Mode, then an additional LIRC start up time, t_{START}, as provided in the LIRC frequency table, must be added to the t_{SST} time in the table above.

4. The System Speed Switch Time is effectively the time taken for the newly activated oscillator to start up.

Input/Output Characteristics

Input/Output (without Multi-power) D.C. Characteristics

Ta=-40°C~85°C

Symbol	Parameter	Test Conditions		Min.	Typ.	Max.	Unit
		V_{DD}	Conditions				
V_{IL}	Input Low Voltage for I/O Ports (Except PA6~PA7, PB2~PB3 and PC4~PC5 Pins)	5V	—	0	—	1.5	V
		—	—	0	—	$0.2V_{DD}$	
V_{IH}	Input High Voltage for I/O Ports (Except PA6~PA7, PB2~PB3 and PC4~PC5 Pins)	5V	—	3.5	—	5.0	V
		—	—	$0.8V_{DD}$	—	V_{DD}	
I_{OL}	Sink Current for I/O Ports (Except PA6~PA7, PB2~PB3 and PC4~PC5 Pins)	3V	$V_{OL}=0.1V_{DD}$	16	32	—	mA
		5V		32	65	—	
I_{OH}	Source Current for I/O Ports (Except PA6~PA7, PB2~PB3 and PC4~PC5 Pins)	3V	$V_{OH}=0.9V_{DD}$, SLEDCn[m+1:m]=00B (n=0~3; m=0, 2, 4, 6)	-0.7	-1.5	—	mA
		5V		-1.5	-2.9	—	
		3V	$V_{OH}=0.9V_{DD}$, SLEDCn[m+1:m]=01B (n=0~3; m=0, 2, 4, 6)	-1.3	-2.5	—	
		5V		-2.5	-5.1	—	
		3V	$V_{OH}=0.9V_{DD}$, SLEDCn[m+1:m]=10B (n=0~3; m=0, 2, 4, 6)	-1.8	-3.6	—	
		5V		-3.6	-7.3	—	
		3V	$V_{OH}=0.9V_{DD}$, SLEDCn[m+1:m]=11B (n=0~3; m=0, 2, 4, 6)	-4	-8	—	
		5V		-8	-16	—	
R_{PH}	Pull-high Resistance for I/O Ports (1) (Except PA6~PA7, PB2~PB3 and PC4~PC5 Pins)	3V	—	20	60	100	kΩ
		5V		10	30	50	
I_{LEAK}	Input leakage current for I/O Ports (Except PA6~PA7, PB2~PB3 and PC4~PC5 Pins)	5V	$V_{IN}=V_{DD}$ or $V_{IN}=V_{SS}$	—	—	±1	μA
t_{INT}	External Interrupt Input Pin Minimum Pulse Width	—	—	10	—	—	μs
t_{TCK}	TM Clock Input Pin Minimum Pulse Width	—	—	0.3	—	—	μs
t_{TPI}	TM Capture Input Pin Minimum Pulse Width	—	—	0.3	—	—	μs
f_{TMCLK}	TM Maximum Timer Clock Source Frequency	5V	—	—	—	1	f_{SYS}
t_{CPW}	TM Minimum Capture Pulse Width	—	—	t_{CPW} (2)	—	—	μs

Note: 1. The R_{PH} internal pull-high resistance value is calculated by connecting to ground and enabling the input pin with a pull-high resistor and then measuring the pin current at the specified supply voltage level. Dividing the voltage by this measured current provides the R_{PH} value.

2. For PTMn:

If PTnCAPTS=0, then $t_{CPW}=\max(2\times t_{TMCLK}, t_{TPI})$

If PTnCAPTS=1, then $t_{CPW}=\max(2\times t_{TMCLK}, t_{TCK})$

Ex1: If PTnCAPTS=0, f_{TMCLK}=16MHz, t_{TPI}=0.3μs, then t_{CPW}=max(0.125μs, 0.3μs)=0.3μs

Ex2: If PTnCAPTS=1, f_{TMCLK}=16MHz, t_{TCK}=0.3μs, then t_{CPW}=max(0.125μs, 0.3μs)=0.3μs

Ex3: If PTnCAPTS=0, f_{TMCLK}=8MHz, t_{TPI}=0.3μs, then t_{CPW}=max(0.25μs, 0.3μs)=0.3μs

Ex4: If PTnCAPTS=0, f_{TMCLK}=4MHz, t_{TPI}=0.3μs, then t_{CPW}=max(0.5μs, 0.3μs)=0.5μs

For STM:

$t_{CPW}=\max(2\times t_{TMCLK}, t_{TPI})$

Ex1: If f_{TMCLK}=16MHz, t_{TPI}=0.3μs, then t_{CPW}=max(0.125μs, 0.3μs)=0.3μs

Ex2: If f_{TMCLK}=8MHz, t_{TPI}=0.3μs, then t_{CPW}=max(0.25μs, 0.3μs)=0.3μs

Ex3: If f_{TMCLK}=4MHz, t_{TPI}=0.3μs, then t_{CPW}=max(0.5μs, 0.3μs)=0.5μs

Where $t_{TMCLK}=1/f_{TMCLK}$

Input/Output (with Multi-power) D.C. Characteristics

Ta=-40°C~85°C

Symbol	Parameter	Test Conditions		Min.	Typ.	Max.	Unit
		V_{DD}	Conditions				
V_{DD}	V_{DD} Power Supply for PA6~PA7, PB2~PB3 and PC4~PC5 Pins	—	—	2.2	5.0	5.5	V
V_{DDIO}	V_{DDIO} Power Supply for PA6~PA7, PB2~PB3 and PC4~PC5 Pins	—	—	2.2	—	V_{DD}	V
V_{IL}	Input Low Voltage for PA6~PA7, PB2~PB3 and PC4~PC5 Pins	5V	Pin power=V_{DD} or V_{DDIO}, V_{DDIO}=V_{DD}	0	—	1.5	V
		—	Pin power=V_{DD} or V_{DDIO}	0	—	0.2 (V_{DD}/V_{DDIO})	
V_{IH}	Input High Voltage for PA6~PA7, PB2~PB3 and PC4~PC5 Pins	5V	Pin power=V_{DD} or V_{DDIO}, V_{DDIO}=V_{DD}	3.5	—	5.0	V
		—	Pin power=V_{DD} or V_{DDIO}	0.8 (V_{DD}/V_{DDIO})	—	V_{DD}/V_{DDIO}	
I_{OL}	Sink Current for PA6~PA7, PB2~PB3 and PC4~PC5 Pins	3V	V_{OL}=0.1 (V_{DD} or V_{DDIO}), V_{DDIO}=V_{DD}	16	32	—	mA
		5V		32	65	—	
		5V	V_{OL}=0.1(V_{DD} or V_{DDIO}), V_{DDIO}=3V	20	40	—	
I_{OH}	Source Current for PA6~PA7, PB2~PB3 and PC4~PC5 Pins	3V	V_{OH}=0.9(V_{DD} or V_{DDIO}), V_{DDIO}=V_{DD}, SLEDCn[m+1:m]=00B (n=0~3; m=0, 2, 4, 6)	-0.7	-1.5	—	mA
		5V		-1.5	-2.9	—	
		5V	V_{OH}=0.9(V_{DD} or V_{DDIO}) V_{DDIO}=3V, SLEDCn[m+1:m]=00B (n=0~3; m=0, 2, 4, 6)	-0.40	-0.85	—	
		3V	V_{OH}=0.9(V_{DD} or V_{DDIO}), V_{DDIO}=V_{DD}, SLEDCn[m+1:m]=01B (n=0~3; m=0, 2, 4, 6)	-1.3	-2.5	—	
		5V		-2.5	-5.1	—	
		5V	V_{OH}=0.9(V_{DD} or V_{DDIO}), V_{DDIO}=3V, SLEDCn[m+1:m]=01B (n=0~3; m=0, 2, 4, 6)	-0.70	-1.35	—	
		3V	V_{OH}=0.9(V_{DD} or V_{DDIO}), V_{DDIO}=V_{DD}, SLEDCn[m+1:m]=10B (n=0~3; m=0, 2, 4, 6)	-1.8	-3.6	—	
		5V		-3.6	-7.3	—	
		5V	V_{OH}=0.9(V_{DD} or V_{DDIO}), V_{DDIO}=3V, SLEDCn[m+1:m]=10B (n=0~3; m=0, 2, 4, 6)	-0.95	-1.90	—	
		3V	V_{OH}=0.9(V_{DD} or V_{DDIO}), V_{DDIO}=V_{DD}, SLEDCn[m+1:m]=11B (n=0~3; m=0, 2, 4, 6)	-4	-8	—	
		5V		-8	-16	—	
		5V	V_{OH}=0.9(V_{DD} or V_{DDIO}), V_{DDIO}=3V, SLEDCn[m+1:m]=11B (n=0~3; m=0, 2, 4, 6)	-2.5	-5.0	—	
R_{PH}	Pull-high Resistance for PA6~PA7, PB2~PB3 and PC4~PC5 Pins (Note)	3V	Pin power=V_{DD} or V_{DDIO}, V_{DDIO}=V_{DD}	20	60	100	kΩ
		5V		10	30	50	
		5V	Pin power=V_{DD} or V_{DDIO}, V_{DDIO}=3V	36	110	180	
I_{LEAK}	Input Leakage Current for PA6~PA7, PB2~PB3 and PC4~PC5 Pins	5V	V_{IN}=V_{SS} or V_{IN}=V_{DD} or V_{DDIO}	—	—	±1	μA

Note: The R_{PH} internal pull-high resistance value is calculated by connecting to ground and enabling the input pin with a pull-high resistor and then measuring the pin current at the specified supply voltage level. Dividing the voltage by this measured current provides the R_{PH} value.

Memory Electrical Characteristics

Ta=-40°C~85°C, unless otherwise specified

Symbol	Parameter	Test Conditions		Min.	Typ.	Max.	Unit
		V_{DD}	Conditions				
V_{DD}	V_{DD} for Read/Write	—	—	2.2	—	5.5	V
Flash Program Memory							
t_{FWR}	Write Time	—	FWERTS=0	—	2.2	2.7	ms
		—	FWERTS=1	—	3.0	3.6	
t_{FER}	Erase Time	—	FWERTS=0	—	3.2	3.9	ms
		—	FWERTS=1	—	3.7	4.5	
E_P	Cell Endurance	—	—	100K	—	—	E/W
t_{RETD}	Data Retention Time	—	Ta=25°C	—	40	—	Year
t_{ACTV}	ROM Activation Time – Wake-up from Power Down Mode	—	—	1	—	2	t_{LIRC}
Data EEPROM Memory							
t_{EERD}	Read Time	—	—	—	—	4	t_{SYS}
t_{EEWR}	Write Time (Byte Mode)	—	EWERTS=0	—	5.4	6.6	ms
		—	EWERTS=1	—	6.7	8.1	
	Write Time (Page Mode)	—	EWERTS=0	—	2.2	2.7	
		—	EWERTS=1	—	3.0	3.6	
t_{EEER}	Erase Time	—	EWERTS=0	—	3.2	3.9	ms
		—	EWERTS=1	—	3.7	4.5	
E_P	Cell Endurance	—	—	100K	—	—	E/W
t_{RETD}	Data Retention Time	—	Ta=25°C	—	40	—	Year
RAM Data Memory							
V_{DR}	RAM Data Retention Voltage	—	—	1.0	—	—	V

Note: 1. The ROM activation time t_{ACTV} should be added when calculating the total system start-up time of a wake-up from the power down mode.
2. "E/W" means Erase/Write times.

LVR/LVD Electrical Characteristics

Ta=-40°C~85°C

Symbol	Parameter	Test Conditions		Min.	Typ.	Max.	Unit
		V_{DD}	Conditions				
V_{DD}	Operating Voltage	—	—	2.2	—	5.5	V
V_{LVR}	Low Voltage Reset Voltage	—	LVR enable, voltage select 2.1V	-5%	2.1	+5%	V
		—	LVR enable, voltage select 2.55V		2.55		
		—	LVR enable, voltage select 3.15V		3.15		
		—	LVR enable, voltage select 3.8V		3.8		
V_{LVD}	Low Voltage Detection Voltage	—	LVD enable, voltage select LVDIN pin=1.23V	-10%	1.23	+10%	V
		—	LVD enable, voltage select 2.2V	-5%	2.2	+5%	
		—	LVD enable, voltage select 2.4V		2.4		
		—	LVD enable, voltage select 2.7V		2.7		
		—	LVD enable, voltage select 3.0V		3.0		
		—	LVD enable, voltage select 3.3V		3.3		
		—	LVD enable, voltage select 3.6V		3.6		
		—	LVD enable, voltage select 4.0V		4.0		

Symbol	Parameter	Test Conditions		Min.	Typ.	Max.	Unit
		V_{DD}	Conditions				
$I_{LVRLVDBG}$	Operating Current	3V	LVD enable, LVR enable, VBGEN=0	—	—	18	μA
		5V		—	20	25	
		3V	LVD enable, LVR enable, VBGEN=1	—	—	150	
		5V		—	180	200	
t_{LVDS}	LVDO Stable Time	—	For LVR enable, VBGEN=0, LVD off → on	—	—	18	μs
t_{LVR}	Minimum Low Voltage Width to Reset	—	TLVR[1:0]=00B	120	240	480	μs
			TLVR[1:0]=01B	0.5	1.0	2.0	ms
			TLVR[1:0]=10B	1	2	4	
			TLVR[1:0]=11B	2	4	8	
t_{LVD}	Minimum Low Voltage Width to Interrupt	—	—	60	120	240	μs

Note: If V_{LVD}=1.23V, it is used to detect the LVDIN pin input voltage. Other V_{LVD} choices are used to detect the power supply V_{DD}.

24-Bit Delta Sigma A/D Converter Electrical Characteristics

V_{DD}=V_{IN}, Ta=25°C, unless otherwise specified
LDO & VCM Test conditions: MCU enters SLEEP mode, other functions disabled

Symbol	Parameter	Test Conditions		Min.	Typ.	Max.	Unit
		V_{DD}	Conditions				
LDO							
V_{IN}	Supply Voltage for LDO and Bandgap	—	Ta=0°C~45°C	2.4	—	5.5	V
I_Q	LDO Quiescent Current	—	LDOVS[1:0]=00B, V_{IN}=3.6V, no load	—	35	50	μA
I_{BGP}	Bandgap Quiescent Current	—	BGPEN=1, V_{IN}=3.6V, no load	—	150	200	μA
V_{OUT_LDO}	LDO Output Voltage	—	LDOVS[1:0]=00B, V_{IN}=3.6V, I_{LOAD}=0.1mA	-5%	2.4	+5%	V
		—	LDOVS[1:0]=01B, V_{IN}=3.6V, I_{LOAD}=0.1mA		2.6		
		—	LDOVS[1:0]=10B, V_{IN}=3.6V, I_{LOAD}=0.1mA		2.9		
		—	LDOVS[1:0]=11B, V_{IN}=3.6V, I_{LOAD}=0.1mA		3.3		
ΔV_{LOAD}	LDO Load Regulation (1)	—	LDOVS[1:0]=00B, V_{IN}=V_{OUT_LDO}+0.2V, 0mA≤I_{LOAD}≤10mA	—	0.105	0.210	%/mA
V_{DROP_LDO}	LDO Dropout Voltage (2)	—	LDOVS[1:0]=00B, V_{IN}=3.6V, I_{LOAD}=10mA, ΔV_{OUT_LDO}=2%	—	—	220	mV
		—	LDOVS[1:0]=01B, V_{IN}=3.6V, I_{LOAD}=10mA, ΔV_{OUT_LDO}=2%	—	—	200	mV
		—	LDOVS[1:0]=10B, V_{IN}=3.6V, I_{LOAD}=10mA, ΔV_{OUT_LDO}=2%	—	—	180	mV
		—	LDOVS[1:0]=11B, V_{IN}=3.6V, I_{LOAD}=10mA, ΔV_{OUT_LDO}=2%	—	—	160	mV
TC_{LDO}	LDO Temperature Coefficient	—	Ta=-40°C~85°C, I_{LOAD}=100μA LDOVS[1:0]=00B, V_{IN}=3.6V	—	60	—	ppm/°C
ΔV_{LINE_LDO}	LDO Line Regulation	—	LDOVS[1:0]=00B, 2.6V≤V_{IN}≤5.5V, I_{LOAD}=100μA	—	—	0.7	%/V
		—	LDOVS[1:0]=00B, 2.6V≤V_{IN}≤3.6V, I_{LOAD}=100μA	—	—	0.2	%/V

Symbol	Parameter	Test Conditions		Min.	Typ.	Max.	Unit
		V_{DD}	Conditions				
VCM_OPA							
V_{VCMOPA}	Supply Voltage for VCM_OPA	—	—	2.6	—	5.5	V
V_{OUT_VCM}	VCM Output Voltage (VCM Pin)	—	V_{IN}=3.6V, no load (Voltage Follower configuration)	-5%	1.25	+5%	V
TC_{VCM}	VCM Temperature Coefficient	—	Ta=-40°C~85°C, V_{IN}=3.6V, no load	—	60	—	ppm/°C
ΔV_{LINE_VCM}	VCM Line Regulation	—	2.6V≤V_{IN}≤3.6V, no load	—	—	0.3	%/V
t_{VCMS}	VCM Turn On Stable Time	—	V_{IN}=3.6V, no load	—	—	10	ms
I_{OH}	Source Current for VCM Output Pin	—	V_{IN}=3.6V, ΔV_{OUT_VCM}=-2% (Voltage Follower configuration)	-2	—	—	mA
I_{OL}	Sink Current for VCM Output Pin	—	V_{IN}=3.6V, ΔV_{OUT_VCM}=+2% (Voltage Follower configuration)	2	—	—	mA
I_{OPA}	Additional Current for OPA Enable	—	No load	—	500	750	μA
V_{OS}	Input Offset Voltage	—	—	-15	—	+15	mV
I_{OS}	Input Offset Current	—	—	—	1	—	pA
V_{CM_OPA}	Common Mode Voltage Range	—	—	V_{SS} +0.3	—	V_{IN} -1.4	V
PSRR	Power Supply Rejection Ratio	—	—	50	80	—	dB
CMRR	Common Mode Rejection Ratio	—	—	50	80	—	dB
A/D Converter & A/D Converter Internal Reference Voltage (Delta Sigma A/D Converter)							
V_{OREG}	Supply Voltage for A/D Converter, PGA	—	LDOEN=0, LDOBPS=1	2.4	—	5.5	V
		—	LDOEN=1	2.4	—	3.3	V
I_{ADC}	Additional Current for A/D Converter Enable	—	—	—	400	550	μA
I_{ADSTB}	Standby Current	—	MCU enters SLEEP mode, no load	—	—	1	μA
N_R	Resolution	—	—	—	—	24	Bit
INL	Integral Non-linearity	—	V_{OREG}=3.3V, V_{REF}=1.25V, ΔSI=±450mV, PGA gain=1	—	±50	—	ppm
PSRR	Power Supply Rejection Ratio	—	PGA gain=128, ΔV=0.1V	—	146	—	dB
CMRR	Common Mode Rejection Ratio	5V	PGA gain=128, ΔV=0.1V	—	101	—	dB
I_{BIAS}	Input Bias Current	—	—	—	0.8	—	nA
NFB	Noise Free Bits	—	f_{MCLK}=4MHz, FLMS[1:0]=10B, V_{OREG}=3.3V, V_{REF}=1.65V, PGA gain=64, OSR=32768	—	16.4	—	Bit
ENOB	Effective Number of Bits	—	f_{MCLK}=4MHz, FLMS[1:0]=10B, V_{OREG}=3.3V, V_{REF}=1.65V, PGA gain=64, OSR=32768	—	19.1	—	Bit
f_{ADCK}	A/D Converter Clock Frequency	—	—	40.0	409.6	440.0	kHz
f_{ADO}	A/D Converter Output Data Rate	—	f_{MCLK}=4MHz, FLMS[1:0]=00B, SINCS=0	4	—	1042	Hz
		—	f_{MCLK}=4MHz, FLMS[1:0]=10B, SINCS=0	10	—	2604	Hz
V_{REFP}	Reference Input Voltage	—	—	V_{REFN} +0.8	—	V_{OREG}	V
V_{REFN}		—		0	—	V_{REFP} -0.8	V
V_{REF}		—	V_{REF}=V_{REFP}-V_{REFN}	0.80	—	1.75	V

Symbol	Parameter	Test Conditions		Min.	Typ.	Max.	Unit
		V_{DD}	Conditions				
PGA							
V_{CM_PGA}	Common Mode Voltage Range	—	—	0.4	—	V_{OREG} -0.95	V
ΔD_I	Differential Input Voltage Range	—	Gain=PGAGN×ADGN	-V_{REF} /Gain	—	+V_{REF} /Gain	V
Temperature Sensor							
TC_{TS}	Temperature Sensor Temperature Coefficient	—	Ta=-40°C~85°C	—	175	—	μV/ °C
LNOPA							
V_{OREG}	Suply Voltage for LNOPA	—	LDOEN=0	2.4	—	3.3	V
			LDOEN=1	2.4	—	3.3	
I_{OPA}	Additional Current for OPA Enable	—	No load	—	200	320	μA
V_{OS}	Input Offset Voltage	—	—	-2	—	+2	mV
V_{CM_OPA}	Common Mode Voltage Range	—	—	V_{SS} +0.15	—	V_{OREG} -1.4	V
PSRR	Power Supply Rejection Ratio	—	—	55	90	—	dB
CMRR	Common Mode Rejection Ratio	—	—	55	90	—	dB
12-Bit D/A Converter							
V_{DD}	Operating Voltage	—	—	2.4	—	5.5	V
V_{DACO}	Output Voltage Range	—	—	V_{SS}	—	V_{REF}	V
V_{REF}	Reference Voltage	—	—	V_{OREG}	—	V_{DD}	V
I_{DAC}	Additional Current for D/A Converter Enable	—	V_{REF}=5V	—	—	610	μA
DNL	Differential Non-linearity	—	2.4V≤V_{DD}≤5.5V	—	—	±6	LSB
INL	Integral Non-linearity	—	2.4V≤V_{DD}≤5.5V	—	—	±12	LSB
R_O	R2R Output Resistor	3V	—	—	13.3	—	kΩ

Note: 1. Load regulation is measured at a constant junction temperature, using pulse testing with a low ON time and is guaranteed up to the maximum power dissipation. Power dissipation is determined by the input/output differential voltage and the output current. Guaranteed maximum power dissipation will not be available over the full input/output range. The maximum allowable power dissipation at any ambient temperature is $P_D=(T_{J(MAX)}-T_a)/\theta_{JA}$.

2. Dropout voltage is defined as the input voltage minus the output voltage that produces a 2% change in the output voltage from the value at appointed V_{IN}.

Effective Number of Bits – ENOB

V_{OREG}=3.3V, V_{REF}=1.65V, f_{ADCK}=133kHz

Data Rate (SPS)	PGA Gain							
	1	2	4	8	16	32	64	128
4	21.5	21.5	21.4	21.3	20.9	20.2	19.4	18.7
8	21.0	20.9	20.9	20.8	20.5	19.9	19.0	18.3
16	20.5	20.5	20.5	20.3	20.2	19.6	18.7	18.0
33	19.8	19.7	19.7	19.6	19.6	19.5	18.4	17.5
65	19.2	19.0	18.8	18.6	18.6	18.4	17.9	17.1
130	18.8	18.7	18.6	18.6	18.4	18.0	17.1	16.5
260	18.3	18.3	18.3	18.2	17.5	17.2	16.8	16.0
521	17.7	17.6	17.6	17.5	17.4	16.9	16.3	15.5

V_{OREG}=3.3V, V_{REF}=1.65V, f_{ADCK}=333kHz

Data Rate (SPS)	PGA Gain							
	1	2	4	8	16	32	64	128
10	21.7	21.3	21.2	21.0	20.6	19.9	19.1	18.3
20	21.2	21.2	21.0	20.9	19.6	19.5	18.6	17.9
41	20.5	20.4	20.3	20.1	19.5	18.6	18.3	17.4
81	20.0	19.8	19.7	19.6	19.3	18.6	17.8	17.0
163	19.5	19.3	19.2	19.0	18.7	18.2	17.4	16.4
326	19.0	18.7	18.6	18.5	18.2	17.7	16.9	16.0
651	18.4	18.3	18.2	18.1	17.8	17.2	16.4	15.5
1302	17.9	17.8	17.7	17.6	17.3	16.7	15.9	15.0

LCD Driver Electrical Characteristics

Ta=25°C

Symbol	Parameter	Test Conditions		Min.	Typ.	Max.	Unit
		V_{DD}	Conditions				
V_{IN}	LCD Operating Voltage	—	Power supply from PLCD pin (for R type) (Note)	3.0	—	5.5	V
		—	Power supply from PLCD pin (for C type) (Note)	2.0	—	3.7	
		—	Power supply from V1 pin (for C type) (Note)	3.0	—	5.5	
		—	Power supply from V2 pin (for C type) (Note)	1.0	—	1.8	
		—	Power supply from V_A (for C type) (Note)	3.0	—	5.5	
		3.3V~5.5V	Power supply from V_B (for C type)	-10%	3.0	+10%	
		2.2V~5.5V	Power supply from V_C (for C type)	-10%	1.0	+10%	
I_{LCD}	Additional Current for LCD Enable – R Type (LCD Clock=4kHz)	5V	No load, V_A=V_{PLCD}=V_{DD}, 1/3 Bias, RCT=0, LCDPR=0, LCDIS[1:0]=00b	—	25.0	37.5	μA
			No load, V_A=V_{PLCD}=V_{DD}, 1/4 Bias, RCT=0, LCDPR=0, LCDIS[1:0]=00b	—	18	28	
			No load, V_A=V_{PLCD}=V_{DD}, 1/3 Bias, RCT=0, LCDPR=0, LCDIS[1:0]=01b	—	50	75	
			No load, V_A=V_{PLCD}=V_{DD}, 1/4 Bias, RCT=0, LCDPR=0, LCDIS[1:0]=01b	—	37.5	56.0	
			No load, V_A=V_{PLCD}=V_{DD}, 1/3 Bias, RCT=0, LCDPR=0, LCDIS[1:0]=10b	—	100	150	
			No load, V_A=V_{PLCD}=V_{DD}, 1/4 Bias, RCT=0, LCDPR=0, LCDIS[1:0]=10b	—	75.0	112.5	
			No load, V_A=V_{PLCD}=V_{DD}, 1/3 Bias, RCT=0, LCDPR=0, LCDIS[1:0]=11b	—	200	300	
			No load, V_A=V_{PLCD}=V_{DD}, 1/4 Bias, RCT=0, LCDPR=0, LCDIS[1:0]=11b	—	150	225	
	Additional Current for LCD Enable – C Type	3V	No load, V_A=V_1=V_{DD}, 1/3 Bias	—	1.5	3.0	μA
		5V		—	2.4	4.8	
I_{LCDOL}	LCD Common and Segment Sink Current	3V	V_{OL}=0.1V_{DD}	210	420	—	μA
		5V		350	700	—	

Symbol	Parameter	Test Conditions		Min.	Typ.	Max.	Unit
		V_{DD}	Conditions				
I_{LCDOH}	LCD Common and Segment Source Current	3V	V_{OH}=0.9V_{DD}	-80	-160	—	μA
		5V		-180	-360	—	
V_{LCD}	LCD Power Supply Comes from Charge Pump	2.2V~5.5V	RCT=0, LCDPR=1, CPVS[1:0]=00b, LCDIS[1:0]=11b	-10%	3.3	+10%	V
			RCT=0, LCDPR=1, CPVS[1:0]=01b, LCDIS[1:0]=11b		3.0		
			RCT=0, LCDPR=1, CPVS[1:0]=10b, LCDIS[1:0]=11b		2.7		
		2.7V~5.5V	RCT=0, LCDPR=1, CPVS[1:0]=11b, LCDIS[1:0]=11b	-10%	4.5	+10%	

Note: The maximum LCD voltage should be less than (V_{DD}+2.0V).

I²C Electrical Characteristics

Ta=25°C

Symbol	Parameter	Test Conditions		Min.	Typ.	Max.	Unit
		V_{DD}	Conditions				
f_{I2C}	I²C Standard Mode (100kHz) f_{SYS} Frequency (Note)	—	No clock debounce	2	—	—	MHz
			2 system clock debounce	4	—	—	
			4 system clock debounce	4	—	—	
	I²C Fast Mode (400kHz) f_{SYS} Frequency (Note)	—	No clock debounce	4	—	—	MHz
			2 system clock debounce	8	—	—	
			4 system clock debounce	8	—	—	
f_{SCL}	SCL Clock Frequency	3V/5V	Standard mode	—	—	100	kHz
			Fast mode	—	—	400	
$t_{SCL(H)}$	SCL Clock High Time	3V/5V	Standard mode	3.5	—	—	μs
			Fast mode	0.9	—	—	
$t_{SCL(L)}$	SCL Clock Low Time	3V/5V	Standard mode	3.5	—	—	μs
			Fast mode	0.9	—	—	
t_{FALL}	SCL and SDA Fall Time	3V/5V	Standard mode	—	—	1.3	μs
			Fast mode	—	—	0.34	
t_{RISE}	SCL and SDA Rise Time	3V/5V	Standard mode	—	—	1.3	μs
			Fast mode	—	—	0.34	
$t_{SU(SDA)}$	SDA Data Setup Time	3V/5V	Standard mode	0.25	—	—	μs
			Fast mode	0.1	—	—	
$t_{H(SDA)}$	SDA Data Hold Time	3V/5V	—	0.1	—	—	μs
$t_{VD(SDA)}$	SDA Data Valid Time	3V/5V	—	—	—	0.6	μs
$t_{SU(STA)}$	Start Condition Setup Time	3V/5V	Standard mode	3.5	—	—	μs
			Fast mode	0.6	—	—	
$t_{H(STA)}$	Start Condition Hold Time	3V/5V	Standard mode	4.0	—	—	μs
			Fast mode (f_{SYS}≥8MHz)	0.6	—	—	
			Fast mode (f_{SYS}<8MHz)	0.8	—	—	
$t_{SU(STO)}$	Stop Condition Setup Time	3V/5V	Standard mode	3.5	—	—	μs
			Fast mode	0.6	—	—	

Note: Using the debounce function can make the transmission more stable and reduce the probability of communication failure due to interference.

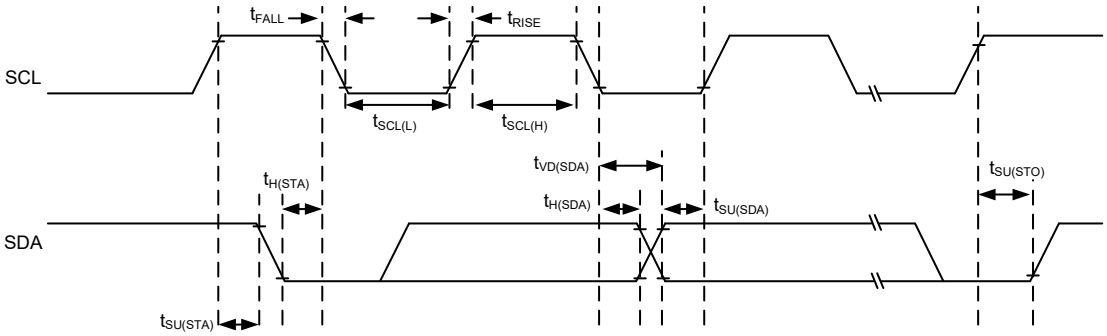

I²C Timing Diagram

Power-on Reset Characteristics

Ta=25°C

Symbol	Parameter	Test Conditions		Min.	Typ.	Max.	Unit
		V_{DD}	Conditions				
V_{POR}	V_{DD} Start Voltage to Ensure Power-on Reset	—	—	—	—	100	mV
RR_{POR}	V_{DD} Rising Rate to Ensure Power-on Reset	—	—	0.035	—	—	V/ms
t_{POR}	Minimum Time for V_{DD} Stays at V_{POR} to Ensure Power-on Reset	—	—	1	—	—	ms

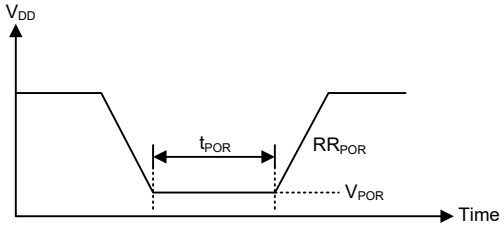

System Architecture

A key factor in the high-performance features of the Holtek range of microcontrollers is attributed to their internal system architecture. The range of the devices take advantage of the usual features found within RISC microcontrollers providing increased speed of operation and enhanced performance. The pipelining scheme is implemented in such a way that instruction fetching and instruction execution are overlapped, hence instructions are effectively executed in one or two cycles for most of the standard or extended instructions respectively, with the exception of branch or call instructions which need one more cycle. An 8-bit wide ALU is used in practically all instruction set operations, which carries out arithmetic operations, logic operations, rotation, increment, decrement, branch decisions, etc. The internal data path is simplified by moving data through the Accumulator and the ALU. Certain internal registers are implemented in the Data Memory and can be directly or indirectly addressed. The simple addressing methods of these registers along with additional architectural features ensure that a minimum of external components is required to provide a functional I/O and A/D control system with maximum reliability and flexibility. This makes the devices suitable for affordable, high-volume production for controller applications.

Clocking and Pipelining

The main system clock, derived from either an HXT, LXT, HIRC or LIRC oscillator is subdivided into four internally generated non-overlapping clocks, T1~T4. The Program Counter is incremented at the beginning of the T1 clock during which time a new instruction is fetched. The remaining T2~T4 clocks carry out the decoding and execution functions. In this way, one T1~T4 clock cycle forms one instruction cycle. Although the fetching and execution of instructions takes place in consecutive instruction cycles, the pipelining structure of the microcontroller ensures that instructions are effectively executed in one instruction cycle. The exception to this are instructions where the contents of the Program Counter are changed, such as subroutine calls or jumps, in which case the instruction will take one more instruction cycle to execute.

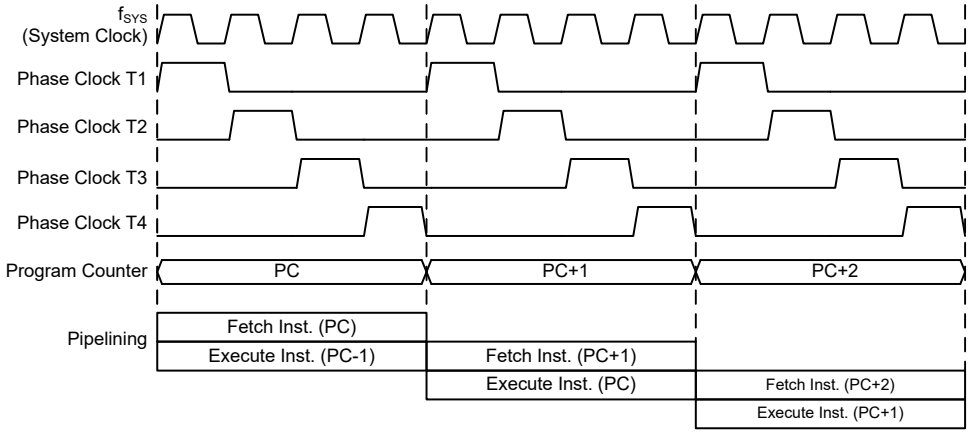

System Clocking and Pipelining

For instructions involving branches, such as jump or call instructions, two machine cycles are required to complete instruction execution. An extra cycle is required as the program takes one cycle to first obtain the actual jump or call address and then another cycle to actually execute the branch. The requirement for this extra cycle should be taken into account by programmers in timing sensitive applications.

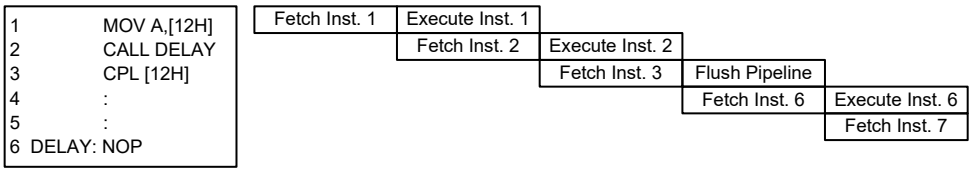

Instruction Fetching

Program Counter

During program execution, the Program Counter is used to keep track of the address of the next instruction to be executed. It is automatically incremented by one each time an instruction is executed except for instructions, such as “JMP” or “CALL” that demand a jump to a non-consecutive Program Memory address. For the device with a Program Memory capacity in excess of 8K words, the Program Memory high byte address must be setup by selecting a certain program memory bank which is implemented using the program memory bank pointer bits, PBP1~PBP0. Only the lower 8 bits, known as the Program Counter Low Register, are directly addressable by the application program.

When executing instructions requiring jumps to non-consecutive addresses such as a jump instruction, a subroutine call, interrupt or reset, etc., the microcontroller manages program control by loading

the required address into the Program Counter. For conditional skip instructions, once the condition has been met, the next instruction, which has already been fetched during the present instruction execution, is discarded and a dummy cycle takes its place while the correct instruction is obtained.

Device	Program Counter	
	High Byte	Low Byte (PCL)
BH67F5265	PBP0, PC12~PC8	PCL7~PCL0
BH67F5275	PBP1~PBP0, PC12~PC8	PCL7~PCL0

Program Counter

The lower byte of the Program Counter, known as the Program Counter Low register or PCL, is available for program control and is a readable and writeable register. By transferring data directly into this register, a short program jump can be executed directly; however, as only this low byte is available for manipulation, the jumps are limited to the present page of memory that is 256 locations. When such program jumps are executed it should also be noted that a dummy cycle will be inserted. Manipulating the PCL register may cause program branching, so an extra cycle is needed to pre-fetch.

Program Counter Read Registers

The Program Counter Read registers are a read only register pair for reading the program counter value which indicates the current program execution address. Read the low byte register first then the high byte register. Reading the low byte register, PCRL, will read the low byte data of the current program execution address, and place the high byte data of the program counter into the 8-bit PCRH buffer. Then reading the PCRH register will read the corresponding data from the 8-bit PCRH buffer.

The following example shows how to read the current program execution address. When the current program execution address is 123H, the steps to execute the instructions are as follows:

(1) MOV A, PCRL → the ACC value is 23H, and the PCRH value is 01H;

MOV A, PCRH → the ACC value is 01H.

(2) LMOV A, PCRL → the ACC value is 23H, and the PCRH value is 01H;

LMOV A, PCRH → the ACC value is 01H.

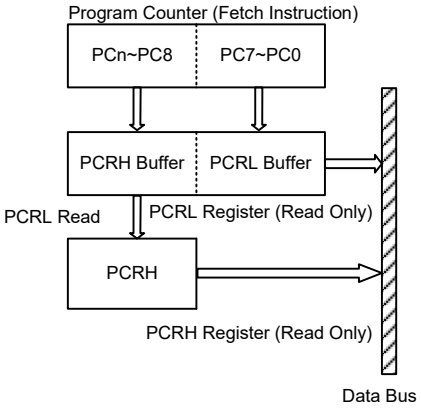

Note: For the BH67F5265, n=13; for the BH67F5275, n=14.

• **PCRL Register**

Bit	7	6	5	4	3	2	1	0
Name	D7	D6	D5	D4	D3	D2	D1	D0
R/W	R	R	R	R	R	R	R	R
POR	0	0	0	0	0	0	0	0

Bit 7~0 **D7~D0**: Program Counter Read Low byte register bit 7 ~ bit 0

• **PCRH Register – BH67F5265**

Bit	7	6	5	4	3	2	1	0
Name	—	—	D13	D12	D11	D10	D9	D8
R/W	—	—	R	R	R	R	R	R
POR	—	—	0	0	0	0	0	0

Bit 7~6 Unimplemented, read as "0"

Bit 5~0 **D13~D8**: Program Counter Read High byte register bit 5 ~ bit 0

• **PCRH Register – BH67F5275**

Bit	7	6	5	4	3	2	1	0
Name	—	D14	D13	D12	D11	D10	D9	D8
R/W	—	R	R	R	R	R	R	R
POR	—	0	0	0	0	0	0	0

Bit 7 Unimplemented, read as "0"

Bit 6~0 **D14~D8**: Program Counter Read High byte register bit 6 ~ bit 0

Stack

This is a special part of the memory which is used to save the contents of the Program Counter only. The stack is organized into 16 levels and is neither part of the data nor part of the program space, and is neither readable nor writeable. The activated level is indexed by the Stack Pointer, STKPTR[3:0]. At a subroutine call or interrupt acknowledge signal, the contents of the Program Counter are pushed onto the stack. At the end of a subroutine or an interrupt routine, signaled by a return instruction, RET or RETI, the Program Counter is restored to its previous value from the stack. After a device reset, the Stack Pointer will point to the top of the stack.

If the stack is full and an enabled interrupt takes place, the interrupt request flag will be recorded but the acknowledge signal will be inhibited. When the Stack Pointer is decremented, by RET or RETI, the interrupt will be serviced. This feature prevents stack overflow allowing the programmer to use the structure more easily. However, when the stack is full, a CALL subroutine instruction can still be executed which will result in a stack overflow. Precautions should be taken to avoid such cases which might cause unpredictable program branching.

If the stack is overflow, the first Program Counter save in the stack will be lost.

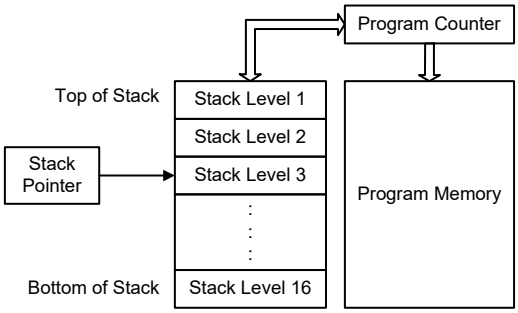

• **STKPTR Register**

Bit	7	6	5	4	3	2	1	0
Name	OSF	—	—	—	D3	D2	D1	D0
R/W	R/W	—	—	—	R	R	R	R
POR	0	—	—	—	0	0	0	0

Bit 7 **OSF**: Stack overflow flag
0: No stack overflow occurred
1: Stack overflow occurred
When the stack is full and a CALL instruction is executed or when the stack is empty and a RET instruction is executed, the OSF bit will be set high. The OSF bit is cleared only by software and cannot be reset automatically by hardware.

Bit 6~4 Unimplemented, read as "0"

Bit 3~0 **D3~D0**: Stack pointer register bit 3 ~ bit 0

The following example shows how the Stack Pointer and Stack Overflow Flag change when program branching conditions occur.

(1) When the CALL subroutine instruction is executed 17 times continuously and the RET instruction is not executed during the period, the corresponding changes of the STKPTR[3:0] and OSF bits are as follows:

CALL Execution Times	0	1	2	3	4	5	6	7	8	9	10	11	12	13	14	15	16
STKPTR[3:0] Bit Value	0	15	14	13	12	11	10	9	8	7	6	5	4	3	2	1	0
OSF Bit Value	0	1	1	1	1	1	1	1	1	1	1	1	1	1	1	1	1

(2) When the OSF bit is set high and not cleared, it will remain high no matter how many times the RET instruction is executed.

(3) When the stack is empty, the RET instruction is executed 16 times continuously, the corresponding changes of the STKPTR[3:0] and OSF bits are as follows:

RET Execution Times	0	1	2	3	4	5	6	7	8	9	10	11	12	13	14	15	16
STKPTR[3:0] Bit Value	0	15	14	13	12	11	10	9	8	7	6	5	4	3	2	1	0
OSF Bit Value	0	1	1	1	1	1	1	1	1	1	1	1	1	1	1	1	1

Arithmetic and Logic Unit – ALU

The arithmetic-logic unit or ALU is a critical area of the microcontroller that carries out arithmetic and logic operations of the instruction set. Connected to the main microcontroller data bus, the ALU receives related instruction codes and performs the required arithmetic or logical operations after which the result will be placed in the specified register. As these ALU calculation or operations may result in carry, borrow or other status changes, the status register will be correspondingly updated to reflect these changes. The ALU supports the following functions:

- Arithmetic operations:
  ADD, ADDM, ADC, ADCM, SUB, SUBM, SBC, SBCM, DAA,
  LADD, LADDM, LADC, LADCM, LSUB, LSUBM, LSBC, LSBCM, LDAA
- Logic operations:
  AND, OR, XOR, ANDM, ORM, XORM, CPL, CPLA,
  LAND, LANDM, LOR, LORM, LXOR, LXORM, LCPL, LCPLA
- Rotation:
  RRA, RR, RRCA, RRC, RLA, RL, RLCA, RLC,
  LRR, LRRA, LRRCA, LRRC, LRLA, LRL, LRLCA, LRLC
- Increment and Decrement:
  INCA, INC, DECA, DEC,
  LINCA, LINC, LDECA, LDEC
- Branch decision:
  JMP, SZ, SZA, SNZ, SIZ, SDZ, SIZA, SDZA, CALL, RET, RETI,
  LSNZ, LSZ, LSZA, LSIZ, LSIZA, LSDZ, LSDZA

Flash Program Memory

The Program Memory is the location where the user code or program is stored. For the devices the Program Memory is Flash type, which means it can be programmed and re-programmed a large number of times, allowing the user the convenience of code modification on the same device. By using the appropriate programming tools, the Flash devices offer users the flexibility to conveniently debug and develop their applications while also offering a means of field programming and updating.

Structure

The Program Memory capacity varies from 16K×16 to 32K×16 bits for these devices. The Program Memory is addressed by the Program Counter and also contains data, table information and interrupt entries. Table data, which can be setup in any location within the Program Memory, is addressed by a separate table pointer registers.

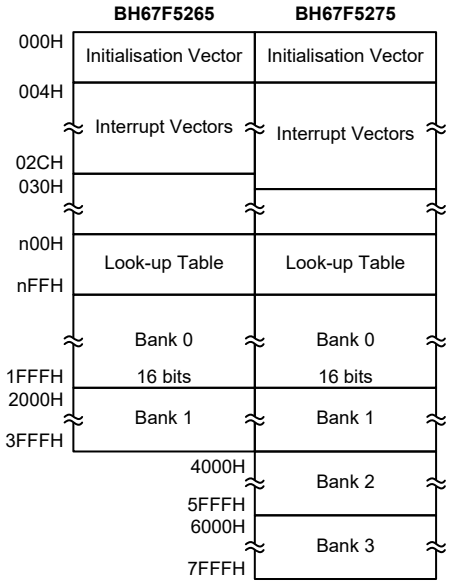

Program Memory Structure

Special Vectors

Within the Program Memory, certain locations are reserved for the reset and interrupts. The location 000H is reserved for use by the device reset for program initialisation. After a device reset is initiated, the program will jump to this location and begin execution.

Look-up Table

Any location within the Program Memory can be defined as a look-up table where programmers can store fixed data. To use the look-up table, the table pointer must first be setup by placing the address of the look up data to be retrieved in the table pointer register, TBLP and TBHP. These registers define the total address of the look-up table.

After setting up the table pointer, the table data can be retrieved from the Program Memory using the “TABRD [m]” or “TABRDL [m]” instructions respectively when the memory [m] is located in sector 0. If the memory [m] is located in other sectors except sector 0, the data can be retrieved from the program memory using the corresponding extended table read instruction such as “LTABRD [m]” or “LTABRDL [m]” respectively. When the instruction is executed, the lower order table byte from the Program Memory will be transferred to the user defined Data Memory register [m] as specified

in the instruction. The higher order table data byte from the Program Memory will be transferred to the TBLH special register. Any unused bits in this transferred higher order byte will be read as "0".

The accompanying diagram illustrates the addressing data flow of the look-up table.

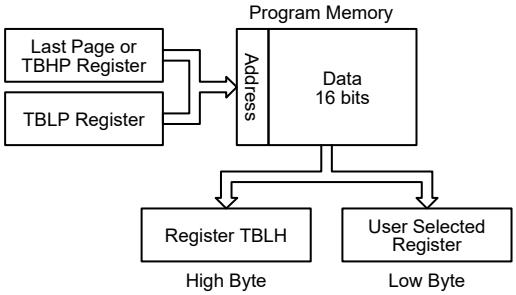

Table Program Example

The accompanying example shows how the table pointer and table data is defined and retrieved from the devices. This example uses raw table data located in the last page which is stored there using the ORG statement. The value at this ORG statement is "1F00H" which is located in ROM Bank 3 and refers to the start address of the last page within the 32K words Program Memory of the BH67F5275. The table pointer low byte register is setup here to have an initial value of "06H". This will ensure that the first data read from the data table will be at the Program Memory address "7F06H" or 6 locations after the start of the last page. Note that the value for the table pointer is referenced to the specific address pointed by TBHP and TBLP if the "TABRD [m]" or "LTABRD [m]" instruction is being used. The high byte of the table data which in this case is equal to zero will be transferred to the TBLH register automatically when the "TABRD [m]" or "LTABRD [m]" instruction is executed.

Because the TBLH register is a read/write register and can be restored, care should be taken to ensure its protection if both the main routine and Interrupt Service Routine use table read instructions. If using the table read instructions, the Interrupt Service Routines may change the value of the TBLH and subsequently cause errors if used again by the main routine. As a rule it is recommended that simultaneous use of the table read instructions should be avoided. However, in situations where simultaneous use cannot be avoided, the interrupts should be disabled prior to the execution of any main routine table-read instructions. Note that all table related instructions require two instruction cycles to complete their operation.

Table Read Program Example

```
rombank 3 code3
ds .section 'data'
tempreg1 db?       ; temporary register #1
tempreg2 db?       ; temporary register #2
code0 .section 'code'
mov a,06h          ; initialise table pointer - note that this address is referenced
mov tblp,a         ; to the last page or the page that tbhp pointed
mov a,7fh          ; initialise high table pointer
mov tbhp,a         ; it is not necessary to set tbhp if executing tabrdl or ltabrdl
:
:
tabrd tempreg1     ; transfers value in table referenced by table pointer data at program
                   ; memory address "7F06H" transferred to tempreg1 and TBLH
dec tblp           ; reduce value of table pointer by one
tabrd tempreg2     ; transfers value in table referenced by table pointer data at program
                   ; memory address "7F05H" transferred to tempreg2 and TBLH
```

```
                    ; in this example the data "1AH" is transferred to tempreg1 and
                    ; data "0FH" to tempreg2 the value "00H" will be
                    ; transferred to the high byte register TBLH
:
:
code3 .section 'code'
org 1F00h           ; sets initial address of last page
dc 00Ah,00Bh,00Ch,00Dh,00Eh,00Fh,01Ah,01Bh
```

In Circuit Programming – ICP

The provision of Flash type Program Memory provides the user with a means of convenient and easy upgrades and modifications to their programs on the same device.

As an additional convenience, Holtek has provided a means of programming the microcontroller in-circuit using a 4-pin interface. This provides manufacturers with the possibility of manufacturing their circuit boards complete with a programmed or un-programmed microcontroller, and then programming or upgrading the program at a later stage. This enables product manufacturers to easily keep their manufactured products supplied with the latest program releases without removal and re-insertion of the devices.

Holtek Writer Pins	MCU Programming Pins	Pin Description
ICPDA	PA0	Programming Serial Data/Address
ICPCK	PA2	Programming Clock
VDD	VDD	Power Supply
VSS	VSS	Ground

The Program Memory can be programmed serially in-circuit using this 4-wire interface. Data is downloaded and uploaded serially on a single pin with an additional line for the clock. Two additional lines are required for the power supply. The technical details regarding the in-circuit programming of the devices are beyond the scope of this document and will be supplied in supplementary literature.

During the programming process, the user must take care of the ICPDA and ICPCK pins for data and clock programming purposes to ensure that no other outputs are connected to these two pins.

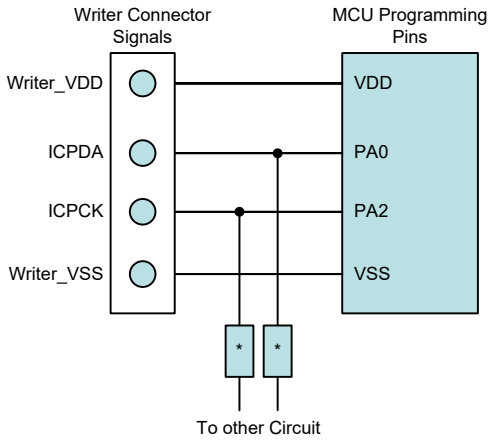

Note: * may be resistor or capacitor. The resistance of * must be greater than 1kΩ or the capacitance of * must be less than 1nF.

On-Chip Debug Support – OCDS

The BH67V5265 EV chip and the BH67F5275 device also provide the "On-Chip Debug" function to debug the MCU during development process. Users can use the OCDS function to emulate the device behaviors by connecting the OCDSDA and OCDSCK pins to the Holtek HT-IDE development tools. The OCDSDA pin is the OCDS Data/Address input/output pin while the OCDSCK pin is the OCDS clock input pin. When users use the OCDS function for debugging, the corresponding pin functions shared with the OCDSDA and OCDSCK pins in the devices will have no effect. However, the two OCDS pins which are pin-shared with the ICP programming pins are still used as the Flash Memory programming pins for ICP. For more detailed OCDS information, refer to the corresponding document named "Holtek e-Link for 8-bit MCU OCDS User's Guide".

Holtek e-Link Pins	OCDS Pins	Pin Description
OCDSDA	OCDSDA	On-Chip Debug Support Data/Address input/output
OCDSCK	OCDSCK	On-Chip Debug Support Clock input
VDD	VDD	Power Supply
VSS	VSS	Ground

In Application Programming – IAP

Flash type Program Memory provides the user with a means of convenient and easy upgrades and modifications to their programs on the same device. The provision of the IAP function offers users the convenience of Flash Memory multi-programming features. The convenience of the IAP function is that it can execute the updated program procedure using its internal firmware, without requiring an external Program Writer or PC. In addition, the IAP interface can also be any type of communication protocol, such as UART, using I/O pins. Regarding the internal firmware, the user can select versions provided by Holtek or create their own. The following section illustrates the procedures regarding how to implement the IAP firmware.

Flash Memory Read/Write Size

The Flash Memory Erase and Write operations are carried out in a page format while the Read operation is carried out in a word format. The page size and write buffer size are both assigned with a capacity of 32 or 64 words. Note that the Erase operation should be executed before the Write operation is executed.

When the Flash Memory Erase/Write Function is successfully enabled, the CFWEN bit will be set high. When the CFWEN bit is set high, the data can be written into the write buffer. The FWT bit is used to initiate the write process and then indicate the write operation status. This bit is set high by application programs to initiate a write process and will be cleared by hardware if the write process is finished.

The Read operation can be carried out by executing a specific read procedure. The FRDEN bit is used to enable the read function and the FRD bit is used to initiate the read process by application programs and then indicate the read operation status. When the read process is finished, this bit will be cleared by hardware.

Device	Program Memory Size	Erase	Write	Read	Page
BH67F5265	16K×16	32 words/page	32 words/time	1 word/time	32 words
BH67F5275	32K×16	64 words/page	64 words/time	1 word/time	64 words

IAP Operation Format

Page	FARH	FARL[7:5]	FARL[4:0]
0	0000 0000	000	Tag Address
1	0000 0000	001	
2	0000 0000	010	
3	0000 0000	011	
4	0000 0000	100	
: :	: :	: :	
510	0011 1111	110	
511	0011 1111	111	

Page Number and Address Selection – BH67F5265

Page	FARH	FARL[7:6]	FARL[5:0]
0	0000 0000	00	Tag Address
1	0000 0000	01	
2	0000 0000	10	
3	0000 0000	11	
4	0000 0000	00	
: :	: :	: :	
510	0111 1111	10	
511	0111 1111	11	

Page Number and Address Selection – BH67F5275

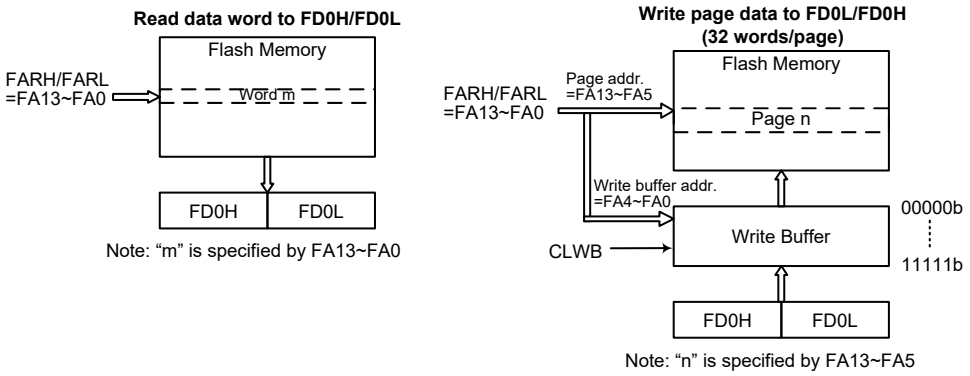

Flash Memory IAP Read/Write Structure – BH67F5265

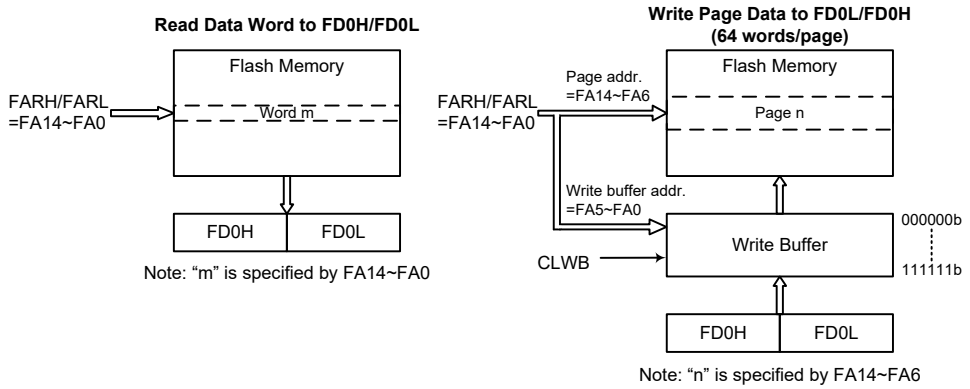

Flash Memory IAP Read/Write Structure – BH67F5275

Write Buffer

The write buffer is used to store the written data temporarily when executing the write operation. The Write Buffer can be filled with written data after the Flash Memory Erase/Write Function has been successfully enabled by executing the Flash Memory Erase/Write Function Enable procedure. The write buffer can be cleared by configuring the CLWB bit in the FC2 register. The CLWB bit can be set high to enable the Clear Write Buffer procedure. When the procedure is finished this bit will be cleared to zero by hardware. It is recommended that the write buffer should be cleared by setting the CLWB bit high before the write buffer is used for the first time or when the data in the write buffer is updated.

The write buffer size is 32 or 64 words corresponding to a page. The write buffer address is mapped to a specific Flash memory page specified by the memory address bits, FA13~FA5 or FA14~FA6. The data written into the FD0L and FD0H registers will be loaded into the write buffer. When data is written into the high byte data register, FD0H, it will result in the data stored in the high and low byte data registers both being written into the write buffer. It will also cause the Flash memory address to be incremented by one, after which the new address will be loaded into the FARH and FARL address registers. When the Flash memory address reaches the page boundary, 11111b of a page with 32 words or 111111b of a page with 64 words, the address will now not be incremented but stop at the last address of the page. At this point a new page address should be specified for any other erase/write operations.

After a write process is finished, the write buffer will automatically be cleared by hardware. Note that the write buffer should be cleared manually by the application program when the data written into the Flash memory is incorrect in the data verification step. The data should again be written into the write buffer after the write buffer has been cleared when the data is found to be incorrect during the data verification step.

IAP Flash Program Memory Registers

There are two address registers, four 16-bit data registers and three control registers, which are all located in Sector 1. Read and Write operations to the Flash memory are carried out using 16-bit data operations using the address and data registers and the control register. Several registers control the overall operation of the internal Flash Program Memory. The address registers are named FARL and FARH, the data registers are named FDnL and FDnH and the control registers are named FC0, FC1 and FC2. As these registers are all located in Sector 1, can be addressed directly only using the corresponding extended instructions or can be read from or written to indirectly using the MP1H/MP1L or MP2H/MP2L Memory Pointer pairs and Indirect Addressing Register, IAR1 or IAR2.

Register Name	Bit							
	7	6	5	4	3	2	1	0
FC0	CFWEN	FMOD2	FMOD1	FMOD0	FWPEN	FWT	FRDEN	FRD
FC1	D7	D6	D5	D4	D3	D2	D1	D0
FC2	—	—	—	—	—	—	FWERTS	CLWB
FARL	FA7	FA6	FA5	FA4	FA3	FA2	FA1	FA0
FARH (BH67F5265)	—	—	FA13	FA12	FA11	FA10	FA9	FA8
FARH (BH67F5275)	—	FA14	FA13	FA12	FA11	FA10	FA9	FA8
FD0L	D7	D6	D5	D4	D3	D2	D1	D0
FD0H	D15	D14	D13	D12	D11	D10	D9	D8
FD1L	D7	D6	D5	D4	D3	D2	D1	D0

Register Name	Bit							
	7	6	5	4	3	2	1	0
FD1H	D15	D14	D13	D12	D11	D10	D9	D8
FD2L	D7	D6	D5	D4	D3	D2	D1	D0
FD2H	D15	D14	D13	D12	D11	D10	D9	D8
FD3L	D7	D6	D5	D4	D3	D2	D1	D0
FD3H	D15	D14	D13	D12	D11	D10	D9	D8

IAP Register List

- **FC0 Register**

Bit	7	6	5	4	3	2	1	0
Name	CFWEN	FMOD2	FMOD1	FMOD0	FWPEN	FWT	FRDEN	FRD
R/W	R/W	R/W	R/W	R/W	R/W	R/W	R/W	R/W
POR	0	0	0	0	0	0	0	0

Bit 7 **CFWEN**: Flash Memory Erase/Write function enable control
0: Flash memory erase/write function is disabled
1: Flash memory erase/write function has been successfully enabled

When this bit is cleared to 0 by application program, the Flash memory erase/write function is disabled. Note that this bit cannot be set high by application programs. Writing a "1" into this bit results in no action. This bit is used to indicate the Flash memory erase/write function status. When this bit is set to 1 by hardware, it means that the Flash memory erase/write function is enabled successfully. Otherwise, the Flash memory erase/write function is disabled if the bit is zero.

Bit 6~4 **FMOD2~FMOD0**: Flash memory Mode selection
000: Write Mode
001: Page Erase Mode
010: Reserved
011: Read Mode
100: Reserved
101: Reserved
110: Flash memory Erase/Write function Enable Mode
111: Reserved

These bits are used to select the Flash Memory operation modes. Note that the "Flash memory Erase/Write function Enable Mode" should first be successfully enabled before the Erase or Write Flash memory operation is executed.

Bit 3 **FWPEN**: Flash memory Erase/Write function enable procedure Trigger
0: Erase/Write function enable procedure is not triggered or procedure timer times out
1: Erase/Write function enable procedure is triggered and procedure timer starts to count

This bit is used to activate the Flash Memory Erase/Write function enable procedure and an internal timer. It is set by the application programs and then cleared by hardware when the internal timer times out. The correct patterns must be written into the FD1L/FD1H, FD2L/FD2H and FD3L/FD3H register pairs respectively as soon as possible after the FWPEN bit is set high.

Bit 2 **FWT**: Flash memory write initiate control
0: Do not initiate Flash memory write or indicating that a Flash memory write process has completed
1: Initiate Flash memory write process

This bit is set by software and cleared by hardware when the Flash memory write process has completed.

Bit 1 **FRDEN**: Flash memory read enable control
0: Flash memory read disable
1: Flash memory read enable
This is the Flash Memory Read Enable Bit which must be set high before any Flash memory read operations are carried out. Clearing this bit to zero will inhibit Flash memory read operations.

Bit 0 **FRD**: Flash memory read initiate control
0: Do not initiate Flash memory read or indicating that a Flash memory read process has completed
1: Initiate Flash memory read process
This bit is set by software and cleared by hardware when the Flash memory read process has completed.

Note: 1. The FWT, FRDEN and FRD bits cannot be set to "1" at the same time with a single instruction.
2. Ensure that the f_{SUB} clock is stable before executing the erase or write operation.
3. Note that the CPU will be stopped when a read, write or erase operation is successfully activated.
4. Ensure that the read, erase or write operation is totally complete before executing other operations.

• **FC1 Register**

Bit	7	6	5	4	3	2	1	0
Name	D7	D6	D5	D4	D3	D2	D1	D0
R/W	R/W	R/W	R/W	R/W	R/W	R/W	R/W	R/W
POR	0	0	0	0	0	0	0	0

Bit 7~0 **D7~D0**: Chip Reset Pattern
When a specific value of "55H" is written into this register, a reset signal will be generated to reset the whole chip.

• **FC2 Register**

Bit	7	6	5	4	3	2	1	0
Name	—	—	—	—	—	—	FWERTS	CLWB
R/W	—	—	—	—	—	—	R/W	R/W
POR	—	—	—	—	—	—	0	0

Bit 7~2 Unimplemented, read as "0"

Bit 1 **FWERTS**: Erase time and Write time selection
0: Erase time is 3.2ms (t_{FER}) / Write time is 2.2ms (t_{FWR})
1: Erase time is 3.7ms (t_{FER}) / Write time is 3.0ms (t_{FWR})

Bit 0 **CLWB**: Flash memory Write Buffer Clear control
0: Do not initiate a Write Buffer Clear process or indicating that a Write Buffer Clear process has completed
1: Initiate Write Buffer Clear process
This bit is set by software and cleared by hardware when the Write Buffer Clear process has completed.

• **FARL Register**

Bit	7	6	5	4	3	2	1	0
Name	FA7	FA6	FA5	FA4	FA3	FA2	FA1	FA0
R/W	R/W	R/W	R/W	R/W	R/W	R/W	R/W	R/W
POR	0	0	0	0	0	0	0	0

Bit 7~0 **FA7~FA0**: Flash Memory Address bit 7 ~ bit 0

• **FARH Register – BH67F5265**

Bit	7	6	5	4	3	2	1	0
Name	—	—	FA13	FA12	FA11	FA10	FA9	FA8
R/W	—	—	R/W	R/W	R/W	R/W	R/W	R/W
POR	—	—	0	0	0	0	0	0

Bit 7~6 Unimplemented, read as "0"

Bit 5~0 **FA13~FA8**: Flash Memory Address bit 13 ~ bit 8

• **FARH Register – BH67F5275**

Bit	7	6	5	4	3	2	1	0
Name	—	FA14	FA13	FA12	FA11	FA10	FA9	FA8
R/W	—	R/W	R/W	R/W	R/W	R/W	R/W	R/W
POR	—	0	0	0	0	0	0	0

Bit 7 Unimplemented, read as "0"

Bit 6~0 **FA14~FA8**: Flash Memory Address bit 14 ~ bit 8

• **FD0L Register**

Bit	7	6	5	4	3	2	1	0
Name	D7	D6	D5	D4	D3	D2	D1	D0
R/W	R/W	R/W	R/W	R/W	R/W	R/W	R/W	R/W
POR	0	0	0	0	0	0	0	0

Bit 7~0 **D7~D0**: The first Flash Memory data word bit 7 ~ bit 0

Note that data written into the low byte data register FD0L will only be stored in the FD0L register and not loaded into the lower 8-bit write buffer.

• **FD0H Register**

Bit	7	6	5	4	3	2	1	0
Name	D15	D14	D13	D12	D11	D10	D9	D8
R/W	R/W	R/W	R/W	R/W	R/W	R/W	R/W	R/W
POR	0	0	0	0	0	0	0	0

Bit 7~0 **D15~D8**: The first Flash Memory data word bit 15 ~ bit 8

Note that when 8-bit data is written into the high byte data register FD0H, the whole 16 bits of data stored in the FD0H and FD0L registers will simultaneously be loaded into the 16-bit write buffer after which the contents of the Flash memory address register pair, FARH and FARL, will be incremented by one.

• **FD1L Register**

Bit	7	6	5	4	3	2	1	0
Name	D7	D6	D5	D4	D3	D2	D1	D0
R/W	R/W	R/W	R/W	R/W	R/W	R/W	R/W	R/W
POR	0	0	0	0	0	0	0	0

Bit 7~0 **D7~D0**: The second Flash Memory data word bit 7 ~ bit 0

• **FD1H Register**

Bit	7	6	5	4	3	2	1	0
Name	D15	D14	D13	D12	D11	D10	D9	D8
R/W	R/W	R/W	R/W	R/W	R/W	R/W	R/W	R/W
POR	0	0	0	0	0	0	0	0

Bit 7~0 **D15~D8**: The second Flash Memory data word bit 15 ~ bit 8

• **FD2L Register**

Bit	7	6	5	4	3	2	1	0
Name	D7	D6	D5	D4	D3	D2	D1	D0
R/W	R/W	R/W	R/W	R/W	R/W	R/W	R/W	R/W
POR	0	0	0	0	0	0	0	0

Bit 7~0 **D7~D0**: The third Flash Memory data word bit 7 ~ bit 0

• **FD2H Register**

Bit	7	6	5	4	3	2	1	0
Name	D15	D14	D13	D12	D11	D10	D9	D8
R/W	R/W	R/W	R/W	R/W	R/W	R/W	R/W	R/W
POR	0	0	0	0	0	0	0	0

Bit 7~0 **D15~D8**: The third Flash Memory data word bit 15 ~ bit 8

• **FD3L Register**

Bit	7	6	5	4	3	2	1	0
Name	D7	D6	D5	D4	D3	D2	D1	D0
R/W	R/W	R/W	R/W	R/W	R/W	R/W	R/W	R/W
POR	0	0	0	0	0	0	0	0

Bit 7~0 **D7~D0**: The fourth Flash Memory data word bit 7 ~ bit 0

• **FD3H Register**

Bit	7	6	5	4	3	2	1	0
Name	D15	D14	D13	D12	D11	D10	D9	D8
R/W	R/W	R/W	R/W	R/W	R/W	R/W	R/W	R/W
POR	0	0	0	0	0	0	0	0

Bit 7~0 **D15~D8**: The fourth Flash Memory data word bit 15 ~ bit 8

Flash Memory Erase/Write Flow

It is important to understand the Flash Memory Erase/Write flow before the Flash memory contents are updated. Users can refer to the corresponding operation procedures when developing their IAP program to ensure that the Flash memory contents are correctly updated.

Flash Memory Erase/Write Flow Descriptions

1. Activate the "Flash Memory Erase/Write function enable procedure" first. When the Flash Memory Erase/Write function is successfully enabled, the CFWEN bit in the FC0 register will automatically be set high by hardware. After this, Erase or Write operations can be executed on the Flash memory. Refer to the "Flash Memory Erase/Write Function Enable Procedure" for details.
2. Configure the Flash memory address to select the desired erase page, tag address and then erase this page.

   For a page erase operation, set the FARL and FARH registers to specify the start address of the erase page, then write dummy data into the FD0H register to tag address. The current address will be internally incremented by one after each dummy data is written into the FD0H register. When the address reaches the page boundary, 11111b or 111111b, the address will not be further incremented but stop at the last address of the page. Note that the write operation to the FD0H register is used to tag address, it must be implemented to determine which addresses to be erased.
3. Execute a Blank Check operation to ensure whether the page erase operation is successful or not. The "TABRD" instruction should be executed to read the Flash memory contents and to check if the contents is 0000h or not. If the Flash memory page erase operation fails, users should go back to Step 2 and execute the page erase operation again.
4. Write data into the specific page. Refer to the "Flash Memory Write Procedure" for details.
5. Execute the "TABRD" instruction to read the Flash memory contents and check if the written data is correct or not. If the data read from the Flash memory is different from the written data, it means that the page write operation has failed. The CLWB bit should be set high to clear the write buffer and then write the data into the specific page again if the write operation has failed.
6. Clear the CFWEN bit to disable the Flash Memory Erase/Write function enable mode if the current page Erase and Write operations are complete if no more pages need to be erased or written.

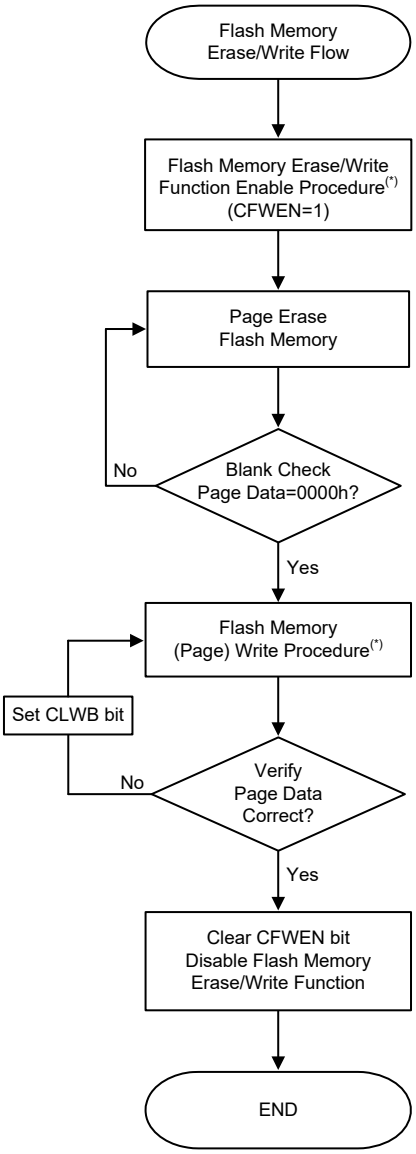

Flash Memory Erase/Write Flow

Note: "*" The Flash Memory Erase/Write Function Enable procedure and Flash Memory Write procedure will be described in the following sections.

Flash Memory Erase/Write Function Enable Procedure

The Flash Memory Erase/Write Function Enable Mode is specially designed to prevent the Flash memory contents from being wrongly modified. In order to allow users to change the Flash memory data using the IAP control registers, users must first enable the Flash Memory Erase/Write function.

Flash Memory Erase/Write Function Enable Procedure Description

1. Write data “110” to the FMOD [2:0] bits in the FC0 register to select the Flash Memory Erase/Write Function Enable Mode.
2. Set the FWPEN bit in the FC0 register to “1” to activate the Flash Memory Erase/Write Function. This will also activate an internal timer.
3. Write the correct data pattern into the Flash data registers, FD1L~FD3L and FD1H~FD3H, as soon as possible after the FWPEN bit is set high. The enable Flash memory erase/write function data pattern is 00H, 0DH, C3H, 04H, 09H and 40H corresponding to the FD1L~FD3L and FD1H~FD3H registers respectively.
4. Once the timer has timed out, the FWPEN bit will automatically be cleared to 0 by hardware regardless of the input data pattern.
5. If the written data pattern is incorrect, the Flash memory erase/write function will not be enabled successfully and the above steps should be repeated. If the written data pattern is correct, the Flash memory erase/write function will be enabled successfully.
6. Once the Flash memory erase/write function is enabled, the Flash memory contents can be updated by executing the page erase and write operations using the IAP control registers.

To disable the Flash memory erase/write function, the CFWEN bit in the FC0 register can be cleared. There is no need to execute the above procedure.

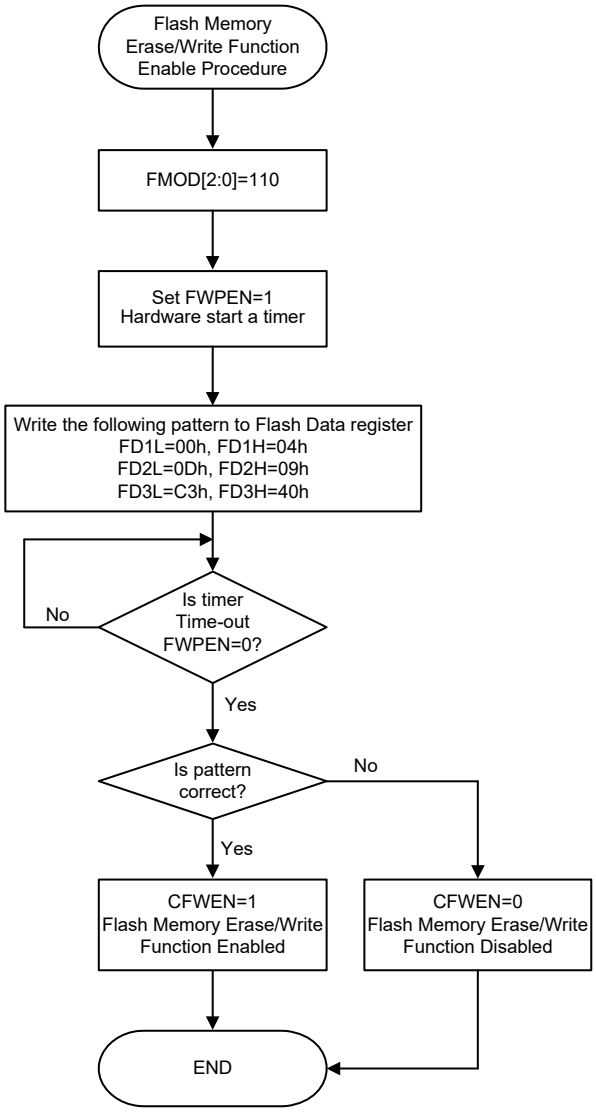

Flash Memory Erase/Write Function Enable Procedure

Flash Memory Write Procedure

After the Flash memory erase/write function has been successfully enabled as the CFWEN bit is set high, the data to be written into the Flash memory can be loaded into the write buffer. The selected Flash memory page data should be erased by properly configuring the IAP control registers before the data write procedure is executed.

The write buffer size is 32 or 64 words, known as a page, whose address is mapped to a specific Flash memory page specified by the memory address bits, FA13~FA5 or FA14~FA6. It is important to ensure that the page where the write buffer data is located is the same one which the memory address bits, FA13~FA5 or FA14~FA6, specify.

Flash Memory Consecutive Write Description

The maximum amount of write data is 32 or 64 words for each write operation. The write buffer address will be automatically incremented by one when consecutive write operations are executed. The start address of a specific page should first be written into the FARL and FARH registers. Then the data word should be written into the FD0L register and then the FD0H register. At the same time the write buffer address will be incremented by one and then the next data word can be written into the FD0L and FD0H registers for the next address without modifying the address register pair, FARH and FARL. When the write buffer address reaches the page boundary the address will not be further incremented but will stop at the last address of the page.

1. Activate the “Flash Memory Erase/Write function enable procedure”. Check the CFWEN bit value and then execute the erase/write operations if the CFWEN bit is set high. Refer to the “Flash Memory Erase/Write function enable procedure” for more details.
2. Set the FMOD field to “001” to select the erase operation and set the CLWB bit high to clear the write buffer. Set the FWT bit high to erase the desired page which is specified by the FARH and FARL registers and has been tagged address. Wait until the FWT bit goes low.
3. Execute a Blank Check operation using the table read instruction to ensure that the erase operation has successfully completed.

   Go to step 2 if the erase operation is not successful.

   Go to step 4 if the erase operation is successful.
4. Set the FMOD field to “000” to select the write operation.
5. Setup the desired start address in the FARH and FARL registers. Write the desired data words consecutively into the FD0L and FD0H registers within a page as specified by their consecutive addresses. The maximum written data number is 32 or 64 words.
6. Set the FWT bit high to write the data words from the write buffer to the Flash memory. Wait until the FWT bit goes low.
7. Verify the data using the table read instruction to ensure that the write operation has successfully completed.

   If the write operation has not successfully completed, set the CLWB bit high to clear the write buffer and then go to step 5.

   Go to step 8 if the write operation is successful.
8. Clear the CFWEN bit low to disable the Flash memory erase/write function.

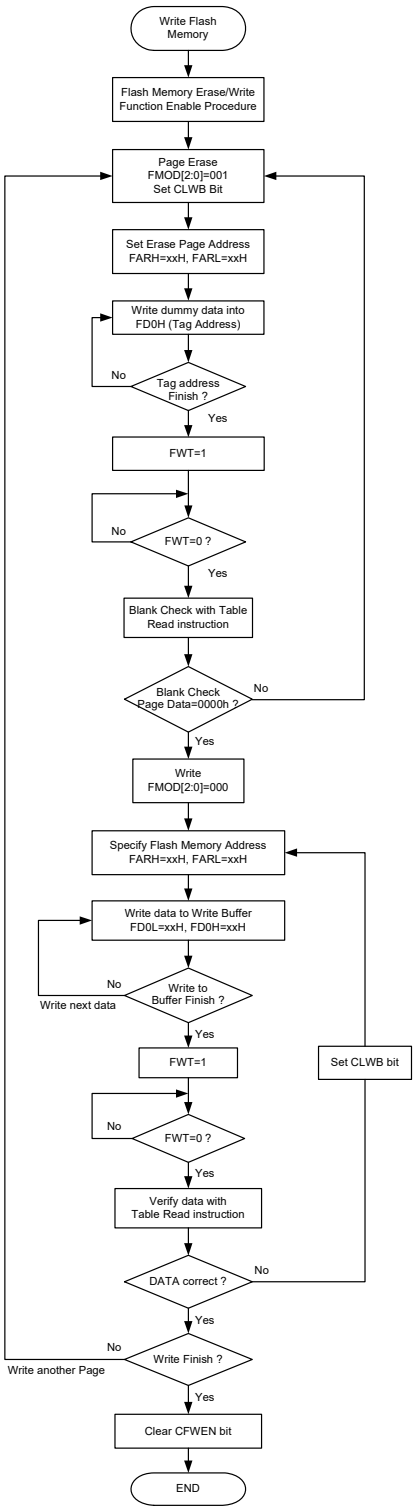

Flash Memory Consecutive Write Procedure

Note: 1. When the erase or write operation is successfully activated, all CPU operations will temporarily cease.
2. It will take certain time for the FWT bit state changing from high to low in the erase or write operation, which can be selected by the FWERTS bit in the FC2 register.

Flash Memory Non-consecutive Write Description

The main difference between Flash Memory Consecutive and Non-consecutive Write operations is whether the data words to be written are located in consecutive addresses or not. If the data to be written is not located in consecutive addresses the desired address should be re-assigned after a data word is successfully written into the Flash Memory.

A two data word non-consecutive write operation is taken as an example here and described as follows:

1. Activate the “Flash Memory Erase/Write function enable procedure”. Check the CFWEN bit value and then execute the erase/write operation if the CFWEN bit is set high. Refer to the “Flash Memory Erase/Write function enable procedure” for more details.
2. Set the FMOD field to “001” to select the erase operation and set the CLWB bit high to clear the write buffer. Set the FWT bit high to erase the desired page which is specified by the FARH and FARL registers and has been tagged address. Wait until the FWT bit goes low.
3. Execute a Blank Check operation using the table read instruction to ensure that the erase operation has successfully completed.

   Go to step 2 if the erase operation is not successful.

   Go to step 4 if the erase operation is successful.
4. Set the FMOD field to “000” to select the write operation.
5. Setup the desired address ADDR1 in the FARH and FARL registers. Write the desired data word DATA1 first into the FD0L register and then into the FD0H register.
6. Set the FWT bit high to transfer the data word from the write buffer to the Flash memory. Wait until the FWT bit goes low.
7. Verify the data using the table read instruction to ensure that the write operation has successfully completed.

   If the write operation has not successfully completed, set the CLWB bit high to clear the write buffer and then go to step 5.

   Go to step 8 if the write operation is successful.
8. Setup the desired address ADDR2 in the FARH and FARL registers. Write the desired data word DATA2 first into the FD0L register and then into the FD0H register.
9. Set the FWT bit high to transfer the data word from the write buffer to the Flash memory. Wait until the FWT bit goes low.
10. Verify the data using the table read instruction to ensure that the write operation has successfully completed.

    If the write operation has not successfully completed, set the CLWB bit high to clear the write buffer and then go to step 8.

    Go to step 11 if the write operation is successful.
11. Clear the CFWEN bit low to disable the Flash memory erase/write function.

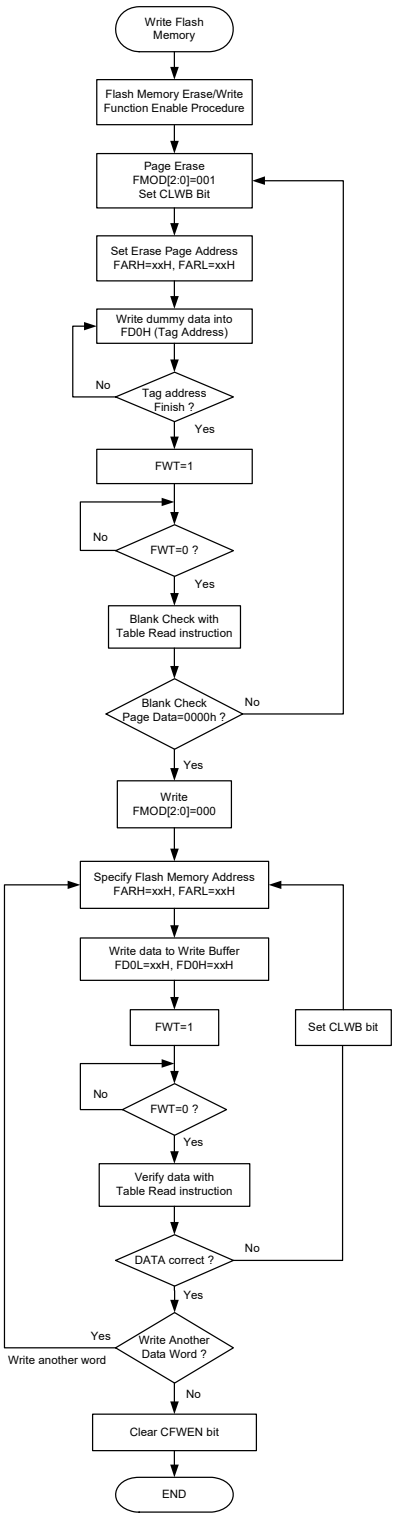

Flash Memory Non-consecutive Write Procedure

Note: 1. When the erase or write operation is successfully activated, all CPU operations will temporarily cease.

2. It will take certain time for the FWT bit state changing from high to low in the erase or write operation, which can be selected by the FWERTS bit in the FC2 register.

Important Points to Note for Flash Memory Write Operations

1. The "Flash Memory Erase/Write Function Enable Procedure" must be successfully activated before the Flash Memory erase/write operation is executed.
2. The Flash Memory erase operation is executed to erase a whole page.
3. The whole write buffer data will be written into the Flash memory in a page format. The corresponding address cannot exceed the page boundary.
4. After the data is written into the Flash memory the Flash memory contents must be read out using the table read instruction, TABRD, and checked if it is correct or not. If the data written into the Flash memory is incorrect, the write buffer should be cleared by setting the CLWB bit high and then writing the data again into the write buffer. Then activate a write operation on the same Flash memory page without erasing it. The data check, buffer clear and data re-write steps should be repeatedly executed until the data written into the Flash memory is correct.
5. The system frequency should be setup to the maximum application frequency when data write and data check operations are executed using the IAP function.

Flash Memory Read Procedure

To activate the Flash Memory Read procedure, the FMOD field should be set to "011" to select the Flash memory read mode and the FRDEN bit should be set high to enable the read function. The desired Flash memory address should be written into the FARH and FARL registers and then the FRD bit should be set high. After this the Flash memory read operation will be activated. The data stored in the specified address can be read from the data registers, FD0H and FD0L, when the FRD bit goes low. There is no need to first activate the Flash Memory Erase/Write Function Enable Procedure before the Flash memory read operation is executed.

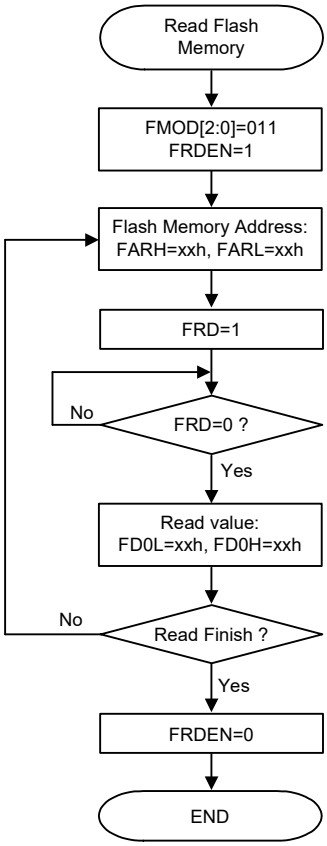

Flash Memory Read Procedure

Note: 1. When the read operation is successfully activated, all CPU operations will temporarily cease.
2. It will take a typical time of three instruction cycles for the FRD bit state changing from high to low.

Data Memory

The Data Memory is a volatile area of 8-bit wide RAM internal memory and is the location where temporary information is stored.

Categorized into two types, the first of these is an area of RAM where special function registers are located. These registers have fixed locations and are necessary for correct operation of the devices. Many of these registers can be read from and written to directly under program control, however, some remain protected from user manipulation. The second area of Data Memory is reserved for general purpose use. All locations within this area are read and write accessible under program control.

The devices also provide a dedicated memory area for the LCD display data storage. In this chapter, only the General Purpose Data Memory and the Special Function Register Data Memory are introduced. More information about the LCD Display Data Memory can be obtained in its corresponding chapter.

Structure

The Data Memory is subdivided into several sectors, all of which are implemented in 8-bit wide RAM. Each of the Data Memory Sector is categorised into two types, the special Purpose Data Memory and the General Purpose Data Memory. The address range of the Special Purpose Data Memory for the devices is from 00H to 7FH while the General Purpose Data Memory address range is from 80H to FFH. The LCD Display Data Memory is located from 00H to 1DH or 00H to 2BH in Sector 4.

Switching between the different Data Memory sectors is achieved by properly setting the Memory Pointers to correct value if using the indirect addressing method.

Device	Special Purpose Data Memory	General Purpose Data Memory		LCD Display Data Memory
	Located Sectors	Capacity	Sector: Address	Sector: Address
BH67F5265	0, 1	1024×8	0: 80H~FFH 1: 80H~FFH : 7: 80H~FFH	4: 00H~1DH
BH67F5275	0, 1	2048×8	0: 80H~FFH 1: 80H~FFH : 15: 80H~FFH	4: 00H~2BH

Data Memory Summary

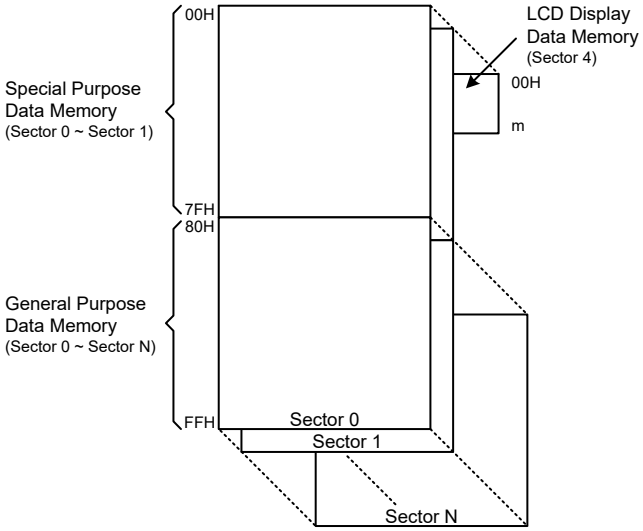

Note: For the BH67F5265, N=7 and m=1DH; for the BH67F5275, N=15 and m=2BH.

Data Memory Structure

Data Memory Addressing

For these devices that support the extended instructions, there is no Bank Pointer for Data Memory Sectors selection. The Bank Pointer, PBP, is only available for Program Memory. For Data Memory the desired Sector is pointed by the MP1H or MP2H register and the certain Data Memory address in the selected sector is specified by the MP1L or MP2L register when using indirect addressing access.

Direct Addressing can be used in all sectors using the extended instruction which can address all available data memory space. For the accessed data memory which is located in any data memory sector except sector 0, the extended instructions can be used to access the data memory instead of using the indirect addressing access. The main difference between standard instructions and extended instructions is that the data memory address “m” in the extended instructions has up to 12 valid bits for these devices, the high byte indicates a sector and the low byte indicates a specific address.

General Purpose Data Memory

All microcontroller programs require an area of read/write memory where temporary data can be stored and retrieved for use later. It is this area of RAM memory that is known as General Purpose Data Memory. This area of Data Memory is fully accessible by the user programing for both reading and writing operations. By using the bit operation instructions individual bits can be set or reset under program control giving the user a large range of flexibility for bit manipulation in the Data Memory.

Special Purpose Data Memory

This area of Data Memory is where registers, necessary for the correct operation of the microcontroller, are stored. Most of the registers are both readable and writeable but some are protected and are readable only, the details of which are located under the relevant Special Function Register section. Note that for locations that are unused, any read instruction to these addresses will return the value “00H”.

	Sector 0	Sector 1
00H	IAR0	
01H	MP0	
02H	IAR1	
03H	MP1L	
04H	MP1H	
05H	ACC	
06H	PCL	
07H	TBLP	
08H	TBLH	
09H	TBHP	
0AH	STATUS	
0BH	PBP	
0CH	IAR2	
0DH	MP2L	
0EH	MP2H	
0FH	RSTFC	
10H	SCC	
11H	HIRCC	
12H	HXTC	
13H	LXTC	
14H	PA	
15H	PAC	
16H	PAPU	
17H	PAWU	
18H	RSTC	
19H	LVRC	
1AH	LVDC	
1BH	MFI0	
1CH	MFI1	
1DH	MFI2	
1EH	WDTC	
1FH	INTEG	
20H	INTC0	PTM1C0
21H	INTC1	PTM1C1
22H	INTC2	PTM1DL
23H		PTM1DH
24H	PB	PTM1AL
25H	PBC	PTM1AH
26H	PBPU	PTM1RPL
27H	PC	PTM1RPH
28H	PCC	PTM2C0
29H	PCPU	PTM2C1
2AH		PTM2DL
2BH	PSCR	PTM2DH
2CH	USR	PTM2AL
2DH	UCR1	PTM2AH
2EH	UCR2	PTM2RPL
2FH	UCR3	PTM2RPH
30H	BRDH	
31H	BRDL	
32H	UFCR	
33H	TXR_RXR	
34H	RxCNT	
35H	SIMC0	
36H	SIMC1	
37H	SIMD	
38H	SIMA/SIMC2	
39H	SIMTOC	IECC
3AH	SPIC0	
3BH	SPIC1	
3CH	SPID	
3DH		
3EH		
3FH		

	Sector 0	Sector 1
40H		EEC
41H	EEAL	
42H	EEAH	
43H	EED	FC0
44H	PE	FC1
45H	PEC	FC2
46H	PEPU	FARL
47H	TB0C	FARH
48H	TB1C	FD0L
49H	STMC0	FD0H
4AH	STMC1	FD1L
4BH	STMDL	FD1H
4CH	STMDH	FD2L
4DH	STMAL	FD2H
4EH	STMAH	FD3L
4FH	STMRP	FD3H
50H	PTM0C0	IFS0
51H	PTM0C1	IFS1
52H	PTM0DL	
53H	PTM0DH	PAS0
54H	PTM0AL	PAS1
55H	PTM0AH	PBS0
56H	PTM0RPL	PBS1
57H	PTM0RPH	PCS0
58H	TLVRC	PCS1
59H	MDUWR0	SLEDC0
5AH	MDUWR1	SLEDC1
5BH	MDUWR2	SLEDC2
5CH	MDUWR3	PDS0
5DH	MDUWR4	PDS1
5EH	MDUWR5	PES0
5FH	MDUWCTRL	PES1
60H	PWRC	PFS0
61H	PGAC0	
62H	PGAC1	
63H	PGACS	
64H	ADRL	
65H	ADRM	
66H	ADRH	
67H	ADCR0	
68H	ADCR1	
69H	ADCS	PCRL
6AH		PCRH
6BH		CRCCR
6CH		CRCIN
6DH		CRCDL
6EH		CRCDH
6FH	VBOPC	
70H	LNOPC	
71H	DSDACC	
72H	DSDAH	
73H	DSDAL	
74H		
75H	PD	
76H	PDC	
77H	PDPU	
78H	LCDC0	
79H	LCDCP	
7AH	LCDC2	
7BH	PF	
7CH	PFC	
7DH	PFPU	
7EH	PMPS	
7FH	STKPTR	

: Unused, read as 00H

: Reserved, cannot be changed

Special Purpose Data Memory Structure – BH67F5265

	Sector 0	Sector 1
00H	IAR0	
01H	MP0	
02H	IAR1	
03H	MP1L	
04H	MP1H	
05H	ACC	
06H	PCL	
07H	TBLP	
08H	TBLH	
09H	TBHP	
0AH	STATUS	
0BH	PBP	
0CH	IAR2	
0DH	MP2L	
0EH	MP2H	
0FH	RSTFC	
10H	SCC	
11H	HIRCC	
12H	HXTC	
13H	LXTC	
14H	PA	
15H	PAC	
16H	PAPU	
17H	PAWU	
18H	RSTC	
19H	LVRC	
1AH	LVDC	
1BH	MFI0	
1CH	MFI1	
1DH	MFI2	
1EH	WDTC	
1FH	INTEG	
20H	INTC0	PTM1C0
21H	INTC1	PTM1C1
22H	INTC2	PTM1DL
23H	INTC3	PTM1DH
24H	PB	PTM1AL
25H	PBC	PTM1AH
26H	PBPU	PTM1RPL
27H	PC	PTM1RPH
28H	PCC	PTM2C0
29H	PCPU	PTM2C1
2AH	MFI3	PTM2DL
2BH	PSCR	PTM2DH
2CH	USR	PTM2AL
2DH	UCR1	PTM2AH
2EH	UCR2	PTM2RPL
2FH	UCR3	PTM2RPH
30H	BRDH	ATMC0
31H	BRDL	ATMC1
32H	UFCR	ATMDL
33H	TXR_RXR	ATMDH
34H	RxCNT	ATMAL
35H	SIMC0	ATMAH
36H	SIMC1	ATMBL
37H	SIMD	ATMBH
38H	SIMA/SIMC2	ATMRP
39H	SIMTOC	IECC
3AH	SPIC0	
3BH	SPIC1	
3CH	SPID	
3DH	PG	
3EH	PGC	
3FH	PGPU	

	Sector 0	Sector 1
40H		EEC
41H	EEAL	
42H	EEAH	
43H	EED	FC0
44H	PE	FC1
45H	PEC	FC2
46H	PEPU	FARL
47H	TB0C	FARH
48H	TB1C	FD0L
49H	STMC0	FD0H
4AH	STMC1	FD1L
4BH	STMDL	FD1H
4CH	STMDH	FD2L
4DH	STMAL	FD2H
4EH	STMAH	FD3L
4FH	STMRP	FD3H
50H	PTM0C0	IFS0
51H	PTM0C1	IFS1
52H	PTM0DL	
53H	PTM0DH	PAS0
54H	PTM0AL	PAS1
55H	PTM0AH	PBS0
56H	PTM0RPL	PBS1
57H	PTM0RPH	PCS0
58H	TLVRC	PCS1
59H	MDUWR0	SLEDC0
5AH	MDUWR1	SLEDC1
5BH	MDUWR2	SLEDC2
5CH	MDUWR3	PDS0
5DH	MDUWR4	PDS1
5EH	MDUWR5	PES0
5FH	MDUWCTRL	PES1
60H	PWRC	PFS0
61H	PGAC0	PFS1
62H	PGAC1	PGS0
63H	PGACS	PGS1
64H	ADRL	PHS0
65H	ADRM	SLEDC3
66H	ADRH	PH
67H	ADCR0	PHC
68H	ADCR1	PHPU
69H	ADCS	PCRL
6AH		PCRH
6BH		CRCCR
6CH		CRCIN
6DH		CRCDL
6EH		CRCDH
6FH	VBOPC	
70H	LNOPC	
71H	DSDACC	
72H	DSDAH	
73H	DSDAL	
74H		
75H	PD	
76H	PDC	
77H	PDPU	
78H	LCDC0	
79H	LCDCP	
7AH	LCDC2	
7BH	PF	
7CH	PFC	
7DH	PFPU	
7EH	PMPS	
7FH	STKPTR	

: Unused, read as 00H

: Reserved, cannot be changed

Special Purpose Data Memory Structure – BH67F5275

Special Function Register Description

Most of the Special Function Register details will be described in the relevant functional sections, however several registers require a separate description in this section.

Indirect Addressing Registers – IAR0, IAR1, IAR2

The Indirect Addressing Registers, IAR0, IAR1 and IAR2, although having their locations in normal RAM register space, do not actually physically exist as normal registers. The method of indirect addressing for RAM data manipulation uses these Indirect Addressing Registers and Memory Pointers, in contrast to direct memory addressing, where the actual memory address is specified. Actions on the IAR0, IAR1 and IAR2 registers will result in no actual read or write operation to these registers but rather to the memory location specified by their corresponding Memory Pointers, MP0, MP1L/MP1H or MP2L/MP2H. Acting as a pair, IAR0 and MP0 can together access data only from Sector 0 while the IAR1 register together with the MP1L/MP1H register pair and IAR2 register together with the MP2L/MP2H register pair can access data from any Data Memory Sector. As the Indirect Addressing Registers are not physically implemented, reading the Indirect Addressing Registers will return a result of "00H" and writing to the registers will result in no operation.

Memory Pointers – MP0, MP1L/MP1H, MP2L/MP2H

Five Memory Pointers, known as MP0, MP1L, MP1H, MP2L and MP2H, are provided. These Memory Pointers are physically implemented in the Data Memory and can be manipulated in the same way as normal registers providing a convenient way with which to address and track data. When any operation to the relevant Indirect Addressing Registers is carried out, the actual address that the microcontrollers is directed to is the address specified by the related Memory Pointer. MP0, together with Indirect Addressing Register, IAR0, are used to access data from Sector 0, while MP1L/MP1H together with IAR1 and MP2L/MP2H together with IAR2 are used to access data from all data sectors according to the corresponding MP1H or MP2H register. Direct Addressing can be used in all data sectors using the extended instruction which can address all available data memory space.

The following example shows how to clear a section of four Data Memory locations already defined as locations adres1 to adres4.

Indirect Addressing Program Example

Example 1

```
data .section 'data'
adres1 db ?
adres2 db ?
adres3 db ?
adres4 db ?
block  db ?
code .section at 0 code
org 00h
start:
     mov a,04h            ; setup size of block
     mov block,a
     mov a,offset adres1  ; Accumulator loaded with first RAM address
     mov mp0,a            ; setup memory pointer with first RAM address
loop:
     clr IAR0             ; clear the data at address defined by MP0
     inc mp0              ; increment memory pointer
     sdz block            ; check if last memory location has been cleared
     jmp loop
continue:
```

Example 2

```
data .section 'data'
adres1 db ?
adres2 db ?
adres3 db ?
adres4 db ?
block  db ?
code .section at 0 'code'
org 00h
start:
     mov a,04h            ; setup size of block
     mov block,a
     mov a,01h            ; setup the memory sector
     mov mp1h,a
     mov a,offset adres1  ; Accumulator loaded with first RAM address
     mov mp1l,a           ; setup memory pointer with first RAM address
loop:
     clr IAR1             ; clear the data at address defined by MP1L
     inc mp1l             ; increment memory pointer MP1L
     sdz block            ; check if last memory location has been cleared
     jmp loop
continue:
:
```

The important point to note here is that in the example shown above, no reference is made to specific RAM addresses.

Direct Addressing Program Example using extended instructions

```
data .section 'data'
temp db ?
code .section at 0 code
org 00h
start:
     lmov a,[m]           ; move [m] data to acc
     lsub a,[m+1]         ; compare [m] and [m+1] data
     snz  c               ; [m]>[m+1]?
     jmp  continue        ; no
     lmov a,[m]           ; yes, exchange [m] and [m+1] data
     mov  temp,a
     lmov a,[m+1]
     lmov [m],a
     mov  a,temp
     lmov [m+1],a
continue:
:
```

Note: Here “m” is a data memory address located in any data memory sectors. For example, m=1F0H, it indicates address 0F0H in Sector 1.

Program Memory Bank Pointer – PBP

For the devices the Program Memory is divided into several banks. Selecting the required Program Memory area is achieved using the Program Memory Bank Pointer, PBP. The PBP register should be properly configured before the devices execute the "Branch" operation using the "JMP" or "CALL" instruction. After that a jump to a non-consecutive Program Memory address which is located in a certain bank selected by the program memory bank pointer bits will occur.

- **PBP Register – BH67F5265**

Bit	7	6	5	4	3	2	1	0
Name	—	—	—	—	—	—	—	PBP0
R/W	—	—	—	—	—	—	—	R/W
POR	—	—	—	—	—	—	—	0

Bit 7~1 Unimplemented, read as "0"

Bit 0 **PBP0**: Program Memory Bank Point bit 0
0: Bank 0
1: Bank 1

- **PBP Register – BH67F5275**

Bit	7	6	5	4	3	2	1	0
Name	—	—	—	—	—	—	PBP1	PBP0
R/W	—	—	—	—	—	—	R/W	R/W
POR	—	—	—	—	—	—	0	0

Bit 7~2 Unimplemented, read as "0"

Bit 1~0 **PBP1~PBP0**: Program Memory Bank Point bit 1 ~ bit 0
00: Bank 0
01: Bank 1
10: Bank 2
11: Bank 3

Accumulator – ACC

The Accumulator is central to the operation of any microcontroller and is closely related with operations carried out by the ALU. The Accumulator is the place where all intermediate results from the ALU are stored. Without the Accumulator it would be necessary to write the result of each calculation or logical operation such as addition, subtraction, shift, etc., to the Data Memory resulting in higher programming and timing overheads. Data transfer operations usually involve the temporary storage function of the Accumulator; for example, when transferring data between one user-defined register and another, it is necessary to do this by passing the data through the Accumulator as no direct transfer between two registers is permitted.

Program Counter Low Register – PCL

To provide additional program control functions, the low byte of the Program Counter is made accessible to programmers by locating it within the Special Purpose area of the Data Memory. By manipulating this register, direct jumps to other program locations are easily implemented. Loading a value directly into this PCL register will cause a jump to the specified Program Memory location; however, as the register is only 8-bit wide, only jumps within the current Program Memory page are permitted. When such operations are used, note that a dummy cycle will be inserted.

Look-up Table Registers – TBLP, TBHP, TBLH

These three special function registers are used to control operation of the look-up table which is stored in the Program Memory. The TBLP and TBHP registers are the table pointer pair and indicates the location where the table data is located. Their value must be setup before any table read instructions are executed. Their value can be changed, for example using the "INC" or "DEC" instructions, allowing for easy table data pointing and reading. TBLH is the location where the high order byte of the table data is stored after a table read data instruction has been executed. Note that the lower order table data byte is transferred to a user defined location.

Status Register – STATUS

This 8-bit register contains the zero flag (Z), carry flag (C), auxiliary carry flag (AC), overflow flag (OV), SC flag, CZ flag, power down flag (PDF), and watchdog time-out flag (TO). These arithmetic/logical operation and system management flags are used to record the status and operation of the microcontrollers.

With the exception of the TO and PDF flags, bits in the status register can be altered by instructions like most other registers. Any data written into the status register will not change the TO or PDF flag. In addition, operations related to the status register may give different results due to the different instruction operations. The TO flag can be affected only by a system power-up, a WDT time-out or by executing the "CLR WDT" or "HALT" instruction. The PDF flag is affected only by executing the "HALT" or "CLR WDT" instruction or during a system power-up.

The Z, OV, AC, C, SC and CZ flags generally reflect the status of the latest operations.

- C is set if an operation results in a carry during an addition operation or if a borrow does not take place during a subtraction operation; otherwise C is cleared. C is also affected by a rotate through carry instruction.
- AC is set if an operation results in a carry out of the low nibbles in addition, or no borrow from the high nibble into the low nibble in subtraction; otherwise AC is cleared.
- Z is set if the result of an arithmetic or logical operation is zero; otherwise Z is cleared.
- OV is set if an operation results in a carry into the highest-order bit but not a carry out of the highest-order bit, or vice versa; otherwise OV is cleared.
- PDF is cleared by a system power-up or executing the "CLR WDT" instruction. PDF is set by executing the "HALT" instruction.
- TO is cleared by a system power-up or executing the "CLR WDT" or "HALT" instruction. TO is set by a WDT time-out.
- SC is the result of the "XOR" operation which is performed by the OV flag and the MSB of the current instruction operation result.
- CZ is the operational result of different flags for different instructions. Refer to register definitions for more details.

In addition, on entering an interrupt sequence or executing a subroutine call, the status register will not be pushed onto the stack automatically. If the contents of the status registers are important and if the subroutine can corrupt the status register, precautions must be taken to correctly save it.

• **STATUS Register**

Bit	7	6	5	4	3	2	1	0
Name	SC	CZ	TO	PDF	OV	Z	AC	C
R/W	R/W	R/W	R	R	R/W	R/W	R/W	R/W
POR	x	x	0	0	x	x	x	x

"x": unknown

Bit 7 **SC**: The result of the "XOR" operation which is performed by the OV flag and the MSB of the instruction operation result

Bit 6 **CZ**: The operational result of different flags for different instructions

For SUB/SUBM/LSUB/LSUBM instructions, the CZ flag is equal to the Z flag.

For SBC/SBCM/LSBC/LSBCM instructions, the CZ flag is the "AND" operation result which is performed by the previous operation CZ flag and current operation zero flag. For other instructions, the CZ flag will not be affected.

Bit 5 **TO**: Watchdog Time-out flag
0: After power up or executing the "CLR WDT" or "HALT" instruction
1: A watchdog time-out occurred

Bit 4 **PDF**: Power down flag
0: After power up or executing the "CLR WDT" instruction
1: By executing the "HALT" instruction

Bit 3 **OV**: Overflow flag
0: No overflow
1: An operation results in a carry into the highest-order bit but not a carry out of the highest-order bit or vice versa

Bit 2 **Z**: Zero flag
0: The result of an arithmetic or logical operation is not zero
1: The result of an arithmetic or logical operation is zero

Bit 1 **AC**: Auxiliary flag
0: No auxiliary carry
1: An operation results in a carry out of the low nibbles, in addition, or no borrow from the high nibble into the low nibble in subtraction

Bit 0 **C**: Carry flag
0: No carry-out
1: An operation results in a carry during an addition operation or if a borrow does not take place during a subtraction operation

The "C" flag is also affected by a rotate through carry instruction.

EEPROM Data Memory

The devices contain an area of internal EEPROM Data Memory. EEPROM is by its nature a non-volatile form of re-programmable memory, with data retention even when its power supply is removed. By incorporating this kind of data memory, a whole new host of application possibilities are made available to the designer. The availability of EEPROM storage allows information such as product identification numbers, calibration values, specific user data, system setup data or other product information to be stored directly within the product microcontroller. The process of reading and writing data to the EEPROM memory has been reduced to a very trivial affair.

EEPROM Data Memory Structure

The EEPROM Data Memory capacity varies from 1024×8 to 2048×8 bits for these devices. Unlike the Program Memory and RAM Data Memory, the EEPROM Data Memory is not directly mapped into memory space and is therefore not directly addressable in the same way as the other types of memory. Read and write operations to the EEPROM are carried out in either the byte mode or page mode determined by the mode selection bit, MODE, in the control register, EEC.

EEPROM Registers

Four registers control the overall operation of the internal EEPROM Data Memory. These are the address registers, EEAL and EEAH, the data register, EED and a single control register, EEC. As the EEAL, EEAH and EED registers are located in Sector 0, they can be directly accessed in the same way as any other Special Function Register. The EEC register, however, being located in Sector 1, can only be read from or written to indirectly using the MP1H/MP1L or MP2H/MP2L Memory Pointer pair and Indirect Addressing Register, IAR1 or IAR2. Because the EEC control register is located at address 40H in Sector 1, the Memory Pointer low byte register, MP1L or MP2L, must first be set to the value 40H and the Memory Pointer high byte register, MP1H or MP2H, set to the value, 01H, before any operations on the EEC register are executed.

Register Name	Bit							
	7	6	5	4	3	2	1	0
EEAL	EEAL7	EEAL6	EEAL5	EEAL4	EEAL3	EEAL2	EEAL1	EEAL0
EEAH (BH67F5265)	—	—	—	—	—	—	EEAH1	EEAH0
EEAH (BH67F5275)	—	—	—	—	—	EEAH2	EEAH1	EEAH0
EED	D7	D6	D5	D4	D3	D2	D1	D0
EEC	EWERTS	EREN	ER	MODE	WREN	WR	RDEN	RD

EEPROM Register List

- **EEAL Register**

Bit	7	6	5	4	3	2	1	0
Name	EEAL7	EEAL6	EEAL5	EEAL4	EEAL3	EEAL2	EEAL1	EEAL0
R/W	R/W	R/W	R/W	R/W	R/W	R/W	R/W	R/W
POR	0	0	0	0	0	0	0	0

Bit 7~0 **EEAL7~EEAL0**: Data EEPROM address low byte register bit 7 ~ bit 0
Data EEPROM address bit 7 ~ bit 0

• **EEAH Register – BH67F5265**

Bit	7	6	5	4	3	2	1	0
Name	—	—	—	—	—	—	EEAH1	EEAH0
R/W	—	—	—	—	—	—	R/W	R/W
POR	—	—	—	—	—	—	0	0

Bit 7~2 Unimplemented, read as "0"

Bit 1~0 **EEAH1~EEAH0**: Data EEPROM address high byte register bit 1 ~ bit 0
Data EEPROM address bit 9 ~ bit 8

• **EEAH Register – BH67F5275**

Bit	7	6	5	4	3	2	1	0
Name	—	—	—	—	—	EEAH2	EEAH1	EEAH0
R/W	—	—	—	—	—	R/W	R/W	R/W
POR	—	—	—	—	—	0	0	0

Bit 7~3 Unimplemented, read as "0"

Bit 2~0 **EEAH2~EEAH0**: Data EEPROM address high byte register bit 2 ~ bit 0
Data EEPROM address bit 10 ~ bit 8

• **EED Register**

Bit	7	6	5	4	3	2	1	0
Name	D7	D6	D5	D4	D3	D2	D1	D0
R/W	R/W	R/W	R/W	R/W	R/W	R/W	R/W	R/W
POR	0	0	0	0	0	0	0	0

Bit 7~0 **D7~D0**: Data EEPROM data bit 7 ~ bit 0

• **EEC Register**

Bit	7	6	5	4	3	2	1	0
Name	EWERTS	EREN	ER	MODE	WREN	WR	RDEN	RD
R/W	R/W	R/W	R/W	R/W	R/W	R/W	R/W	R/W
POR	0	0	0	0	0	0	0	0

Bit 7 **EWERTS**: Data EEPROM Erase time and Write time selection
0: Erase time is 3.2ms (t_{EEER}) / Write time is 2.2ms (t_{EEWR})
1: Erase time is 3.7ms (t_{EEER}) / Write time is 3.0ms (t_{EEWR})

Bit 6 **EREN**: Data EEPROM erase enable
0: Disable
1: Enable
This bit is used to enable Data EEPROM erase function and must be set high before Data EEPROM erase operations are carried out. This bit will be automatically reset to zero by hardware after the erase cycle has finished. Clearing this bit to zero will inhibit data EEPROM erase operations.

Bit 5 **ER**: Data EEPROM erase control
0: Erase cycle has finished
1: Activate an erase cycle
This is the Data EEPROM Erase Control Bit. When this bit is set high by the application program, an erase cycle will be activated. This bit will be automatically reset to zero by hardware after the erase cycle has finished. Setting this bit high will have no effect if the EREN has not first been set high.

Bit 4 **MODE**: Data EEPROM operation mode selection
0: Byte operation mode
1: Page operation mode
This is the EEPROM operation mode selection bit. When the bit is set high by the application program, the Page write, erase or read function will be selected. Otherwise, the byte write or read function will be selected. The EEPROM page buffer size is 16 bytes.

Bit 3 **WREN**: Data EEPROM write enable
0: Disable
1: Enable
This is the Data EEPROM Write Enable Bit, which must be set high before Data EEPROM write operations are carried out. Clearing this bit to zero will inhibit Data EEPROM write operations. Note that the WREN bit will automatically be cleared to zero after the write operation is finished.

Bit 2 **WR**: Data EEPROM write control
0: Write cycle has finished
1: Activate a write cycle
This is the Data EEPROM Write Control Bit. When this bit is set high by the application program, a write cycle will be activated. This bit will be automatically reset to zero by hardware after the write cycle has finished. Setting this bit high will have no effect if the WREN has not first been set high.

Bit 1 **RDEN**: Data EEPROM read enable
0: Disable
1: Enable
This is the Data EEPROM Read Enable Bit, which must be set high before Data EEPROM read operations are carried out. Clearing this bit to zero will inhibit Data EEPROM read operations.

Bit 0 **RD**: Data EEPROM read control
0: Read cycle has finished
1: Activate a read cycle
This is the Data EEPROM Read Control Bit. When this bit is set high by the application program, a read cycle will be activated. This bit will be automatically reset to zero by hardware after the read cycle has finished. Setting this bit high will have no effect if the RDEN has not first been set high.

Note: 1. The EREN, ER, WREN, WR, RDEN and RD cannot be set to “1” at the same time in one instruction. The WR and RD cannot be set to “1” at the same time.
2. Ensure that the f_{SUB} clock is stable before executing the erase or write operation.
3. Ensure that the erase or write operation is totally complete before changing the contents of the EEPROM related registers or activating the IAP function.

Read Operation from the EEPROM

Reading data from the EEPROM can be implemented by two modes for these devices, byte read mode or page read mode, which is controlled by the EEPROM operation mode selection bit, MODE, in the EEC register.

Byte Read Mode

The EEPROM byte read operation can be executed when the mode selection bit, MODE, is cleared to zero. For a byte read operation the desired EEPROM address should first be placed in the EEAH and EEAL registers, as well as the read enable bit, RDEN, in the EEC register should be set high to enable the read function. Then setting the RD bit high will initiate the EEPROM byte read operation. Note that setting the RD bit high only will not initiate a read operation if the RDEN bit is not set high. When the read cycle terminates, the RD bit will automatically be cleared to zero and the EEPROM data can be read from the EED register. The data will remain in the EED register until another read or write operation is executed. The application program can poll the RD bit to determine when the data is valid for reading.

Page Read Mode

The EEPROM page read operation can be executed when the mode selection bit, MODE, is set high. The page size can be up to 16 bytes for the page read operation. For a page read operation the start address of the desired EEPROM page should first be placed in the EEAH and EEAL registers, as well as the read enable bit, RDEN, in the EEC register should be set high to enable the read function. Then setting the RD bit high will initiate the EEPROM page read operation. Note that setting the RD bit high only will not initiate a read operation if the RDEN bit is not set high. When the current byte read cycle terminates, the RD bit will automatically be cleared to zero indicating that the EEPROM data can be read from the EED register and then the current address will be incremented by one by hardware. The data which is stored in the next EEPROM address can continuously be read when the RD bit is again set high without reconfiguring the EEPROM address and RDEN control bit. The application program can poll the RD bit to determine when the data is valid for reading.

The EEPROM address higher 6 bits or higher 7 bits are used to specify the desired page location while the lower 4 bits are used to point to the actual address. In the page read operation mode the lower 4-bit address value will automatically be incremented by one. However, the higher 6-bit or higher 7-bit address value will not be incremented by hardware. When the EEPROM address lower 4-bit value which is internally incremented by one in the page mode reaches the page boundary, known as 0FH, the EEPROM address lower 4-bit value will stop at 0FH. The EEPROM address will not “roll over”.

Page Erase Operation to the EEPROM

The EEPROM page erase operation can be executed when the mode selection bit, MODE, is set high. The EEPROM is capable of a 16-byte page erase. The internal page buffer will be cleared by hardware after power on reset. When the EEPROM erase enable control bit, namely EREN, is changed from “1” to “0”, the internal page buffer will also be cleared. Note that when the EREN bit is changed from “0” to “1”, the internal page buffer will not be cleared. The EEPROM address higher 6 bits or higher 7 bits are used to specify the desired page location while the lower 4 bits are used to point to the actual address. In the page erase operation mode the lower 4-bit address value will automatically be incremented by one after each dummy data byte is written into the EED register. However, the higher 6-bit or higher 7-bit address value will not be incremented by hardware. When the EEPROM address lower 4-bit value which is internally incremented by one in the page mode reaches the page boundary, known as 0FH, the EEPROM address lower 4-bit value will stop at 0FH. The EEPROM address will not “roll over”.

For page erase operations the start address of the desired EEPROM page should first be placed in the EEAH and EEAL registers, then the dummy data to be written should be placed in the EED register. The maximum data length for a page is 16 bytes. Note that the write operation to the EED register is used to tag address, it must be implemented to determine which addresses to be erased. When the page dummy data is completely written, then the EREN bit in the EEC register should be set high to enable erase operations and the ER bit must be immediately set high to initiate the EEPROM erase process. These two instructions must be executed in two consecutive instruction cycles to activate an erase operation successfully. The global interrupt enable bit EMI should also first be cleared before implementing an erase operation and then set again after a valid erase activation procedure has completed.

Note: The above steps must be executed sequentially to successfully complete the page erase operation, refer to the corresponding programming example.

As the EEPROM erase cycle is controlled using an internal timer whose operation is asynchronous to microcontroller system clock, a certain time will elapse before the data will have been erased from the EEPROM. Detecting when the erase cycle has finished can be implemented either by polling the ER bit in the EEC register or by using the EEPROM interrupt. When the erase cycle terminates, the ER bit will be automatically cleared to zero by the microcontroller, informing the user that the page data has been erased. The application program can therefore poll the ER bit to determine when the

erase cycle has ended. After the erase operation is finished, the EREN bit will be cleared to zero by hardware. The Data EEPROM erased page content will all be zero after a page erase operation.

Write Operation to the EEPROM

Writing data to the EEPROM can be implemented by two modes for these devices, byte write mode or page write mode, which is controlled by the EEPROM operation mode selection bit, MODE, in the EEC register.

Byte Write Mode

The EEPROM byte write operation can be executed when the mode selection bit, MODE, is cleared to zero. For byte write operations the desired EEPROM address should first be placed in the EEAH and EEAL registers, then the data to be written should be placed in the EED register. To write data to the EEPROM, the write enable bit, WREN, in the EEC register must first be set high to enable the write function. After this, the WR bit in the EEC register must be immediately set high to initiate a write cycle. These two instructions must be executed in two consecutive instruction cycles to activate a write operation successfully. The global interrupt bit EMI should also first be cleared before implementing any write operations, and then set high again after a valid write activation procedure has completed. Note that setting the WR bit high only will not initiate a write cycle if the WREN bit is not set.

Note: The above steps must be executed sequentially to successfully complete the byte write operation, refer to the corresponding programming example.

As the EEPROM write cycle is controlled using an internal timer whose operation is asynchronous to microcontroller system clock, a certain time will elapse before the data will have been written into the EEPROM. Detecting when the write cycle has finished can be implemented either by polling the WR bit in the EEC register or by using the EEPROM interrupt. When the write cycle terminates, the WR bit will be automatically cleared to zero by the microcontroller, informing the user that the data has been written to the EEPROM. The application program can therefore poll the WR bit to determine when the write cycle has ended. After the write operation is finished, the WREN bit will be cleared to zero by hardware. Note that a byte erase operation will automatically be executed before a byte write operation is successfully activated.

Page Write Mode

Before a page write operation is executed, it is important to ensure that a relevant page erase operation has been successfully executed. The EEPROM page write operation can be executed when the mode selection bit, MODE, is set high. The EEPROM is capable of a 16-byte page write. The internal page buffer will be cleared by hardware after power on reset. When the EEPROM write enable control bit, namely WREN, is changed from “1” to “0”, the internal page buffer will also be cleared. Note that when the WREN bit is changed from “0” to “1”, the internal page buffer will not be cleared. A page write is initiated in the same way as a byte write initiation except that the EEPROM data can be written up to 16 bytes. The EEPROM address higher 6 bits or higher 7 bits are used to specify the desired page location while the lower 4 bits are used to point to the actual address. In the page write operation mode the lower 4-bit address value will automatically be incremented by one after each data byte is written into the EED register. However, the higher 6-bit or higher 7-bit address value will not be incremented by hardware. When the EEPROM address lower 4-bit value which is internally incremented by one in the page mode reaches the page boundary, known as 0FH, the EEPROM address lower 4-bit value will stop at 0FH. The EEPROM address will not “roll over”. At this point any data write operations to the EED register will be invalid.

For page write operations the start address of the desired EEPROM page should first be placed in the EEAH and EEAL registers, then the data to be written should be placed in the EED register.

The maximum data length for a page is 16 bytes. Note that when a data byte is written into the EED register, then the data in the EED register will be loaded into the internal page buffer and the current address value will automatically be incremented by one. When the page data is completely written into the page buffer, then the WREN bit in the EEC register should be set high to enable write operations and the WR bit must be immediately set high to initiate the EEPROM write process. These two instructions must be executed in two consecutive instruction cycles to activate a write operation successfully. The global interrupt enable bit EMI should also first be cleared before implementing any write operations, and then set high again after a valid write activation procedure has completed. Note that setting the WR bit high only will not initiate a write cycle if the WREN bit is not set.

Note: The above steps must be executed sequentially to successfully complete the page write operation, refer to the corresponding programming example.

As the EEPROM write cycle is controlled using an internal timer whose operation is asynchronous to microcontroller system clock, a certain time will elapse before the data will have been written into the EEPROM. Detecting when the write cycle has finished can be implemented either by polling the WR bit in the EEC register or by using the EEPROM interrupt. When the write cycle terminates, the WR bit will be automatically cleared to zero by the microcontroller, informing the user that the data has been written to the EEPROM. The application program can therefore poll the WR bit to determine when the write cycle has ended. After the write operation is finished, the WREN bit will be cleared to zero by hardware.

Write Protection

Protection against inadvertent write operation is provided in several ways. After the devices are powered-on the Write Enable bit in the control register will be cleared preventing any write operations. Also at power-on the Memory Pointer high byte register, MP1H or MP2H, will be reset to zero, which means that Data Memory Sector 0 will be selected. As the EEPROM control register is located in Sector 1, this adds a further measure of protection against spurious write operations. During normal program operation, ensuring that the Write Enable bit in the control register is cleared will safeguard against incorrect write operations.

EEPROM Interrupt

The EEPROM erase or write interrupt is generated when an EEPROM erase or write cycle has ended. The EEPROM interrupt must first be enabled by setting the DEE bit in the relevant interrupt register. However as the EEPROM is contained within a Multi-function Interrupt, the associated multi-function interrupt enable bit must also be set. When an EEPROM erase or write cycle ends, the DEF request flag and its associated multi-function interrupt request flag will both be set. If the global, EEPROM and Multi-function interrupts are enabled and the stack is not full, a jump to the associated Multi-function Interrupt vector will take place. When the interrupt is serviced only the Multi-function interrupt flag will be automatically reset, the EEPROM interrupt flag must be manually reset by the application program. More details can be obtained in the Interrupts section.

Programming Considerations

Care must be taken that data is not inadvertently written to the EEPROM. Protection can be enhanced by ensuring that the Write Enable bit is normally cleared to zero when not writing. Also the Memory Pointer high byte register, MP1H or MP2H, could be normally cleared to zero as this would inhibit access to Sector 1 where the EEPROM control register exists. Although certainly not necessary, consideration might be given in the application program to the checking of the validity of new write data by a simple read back process.

When writing data the WR bit must be set high immediately after the WREN bit has been set high, to ensure the write cycle executes correctly. When erasing data the ER bit must be set high

immediately after the EREN bit has been set high, to ensure the erase cycle executes correctly. The global interrupt bit EMI should also be cleared before a write or erase cycle is executed and then set again after a valid write or erase activation procedure has completed. Note that the devices should not enter the IDLE or SLEEP mode until the EEPROM read, erase or write operation is totally complete. Otherwise, the EEPROM read, erase or write operation will fail.

Programming Examples

Reading a Data Byte from the EEPROM – Polling Method

```
MOV A, 040H              ; setup memory pointer low byte MP1L
MOV MP1L, A              ; MP1 points to EEC register
MOV A, 01H               ; setup memory pointer high byte MP1H
MOV MP1H, A
CLR IAR1.4               ; clear MODE bit, select byte operation mode
MOV A, EEPROM_ADRES_H    ; user defined high byte address
MOV EEAH, A
MOV A, EEPROM_ADRES_L    ; user defined low byte address
MOV EEAL, A
SET IAR1.1               ; set RDEN bit, enable read operations
SET IAR1.0               ; start Read Cycle - set RD bit
BACK:
SZ  IAR1.0               ; check for read cycle end
JMP BACK
CLR IAR1                 ; disable EEPROM read function
CLR MP1H
MOV A, EED               ; move read data to register
MOV READ_DATA, A
```

Reading a Data Page from the EEPROM – Polling Method

```
MOV A, 040H              ; setup memory pointer low byte MP1L
MOV MP1L, A              ; MP1 points to EEC register
MOV A, 01H               ; setup memory pointer high byte MP1H
MOV MP1H, A
SET IAR1.4               ; set MODE bit, select page operation mode
MOV A, EEPROM_ADRES_H    ; user defined high byte address
MOV EEAH, A
MOV A, EEPROM_ADRES_L    ; user defined low byte address
MOV EEAL, A
SET IAR1.1               ; set RDEN bit, enable read operations
; ~~~~ The data length can be up to 16 bytes (Start) ~~~~
CALL READ
CALL READ
:
:
JMP PAGE_READ_FINISH
; ~~~~ The data length can be up to 16 bytes (End) ~~~~
READ:
SET IAR1.0               ; start Read Cycle - set RD bit
BACK:
SZ  IAR1.0               ; check for read cycle end
JMP BACK
MOV A, EED               ; move read data to register
MOV READ_DATA, A
RET
:
PAGE_READ_FINISH:
CLR IAR1                 ; disable EEPROM read function
CLR MP1H
```

Erasing a Data Page to the EEPROM – Polling Method

```
MOV A, 040H              ; setup memory pointer low byte MP1L
MOV MP1L, A              ; MP1 points to EEC register
MOV A, 01H               ; setup memory pointer high byte MP1H
MOV MP1H, A
SET IAR1.4               ; set MODE bit, select page operation mode
MOV A, EEPROM_ADRES_H    ; user defined high byte address
MOV EEAH, A
MOV A, EEPROM_ADRES_L    ; user defined low byte address
MOV EEAL, A
; ~~~~ The data length can be up to 16 bytes (Start) ~~~~
CALL WRITE_BUF
CALL WRITE_BUF
:
:
JMP Erase_START
; ~~~~ The data length can be up to 16 bytes (End) ~~~~
WRITE_BUF:
MOV A, EEPROM_DATA       ; user defined data, erase mode don't care data value
MOV EED, A
RET
:
Erase_START:
CLR EMI
SET IAR1.6               ; set EREN bit, enable erase operations
SET IAR1.5               ; start Erase Cycle - set ER bit - executed immediately
                         ; after setting EREN bit
SET EMI
BACK:
SZ  IAR1.5               ; check for erase cycle end
JMP BACK
CLR MP1H
```

Writing a Data Byte to the EEPROM – Polling Method

```
MOV A, 040H              ; setup memory pointer low byte MP1L
MOV MP1L, A              ; MP1 points to EEC register
MOV A, 01H               ; setup memory pointer high byte MP1H
MOV MP1H, A
CLR IAR1.4               ; clear MODE bit, select byte operation mode
MOV A, EEPROM_ADRES_H    ; user defined high byte address
MOV EEAH, A
MOV A, EEPROM_ADRES_L    ; user defined low byte address
MOV EEAL, A
MOV A, EEPROM_DATA       ; user defined data
MOV EED, A
CLR EMI
SET IAR1.3               ; set WREN bit, enable write operations
SET IAR1.2               ; start Write Cycle - set WR bit - executed immediately
                         ; after setting WREN bit
SET EMI
BACK:
SZ  IAR1.2               ; check for write cycle end
JMP BACK
CLR MP1H
```

Writing a Data Page to the EEPROM – Polling Method

```
MOV A, 040H              ; setup memory pointer low byte MP1L
MOV MP1L, A              ; MP1 points to EEC register
MOV A, 01H               ; setup memory pointer high byte MP1H
MOV MP1H, A
SET IAR1.4               ; set MODE bit, select page operation mode
MOV A, EEPROM_ADRES_H    ; user defined high byte address
MOV EEAH, A
MOV A, EEPROM_ADRES_L    ; user defined low byte address
MOV EEAL, A
; ~~~~ The data length can be up to 16 bytes (Start) ~~~~
CALL WRITE_BUF
CALL WRITE_BUF
:
:
JMP WRITE_START
; ~~~~ The data length can be up to 16 bytes (End) ~~~~
WRITE_BUF:
MOV A, EEPROM_DATA       ; user defined data
MOV EED, A
RET
:
WRITE_START:
CLR EMI
SET IAR1.3               ; set WREN bit, enable write operations
SET IAR1.2               ; start Write Cycle - set WR bit - executed immediately
                         ; after setting WREN bit
SET EMI
BACK:
SZ  IAR1.2               ; check for write cycle end
JMP BACK
CLR MP1H
```

Oscillators

Various oscillator types offer the user a wide range of functions according to their various application requirements. The flexible features of the oscillator functions ensure that the best optimisation can be achieved in terms of speed and power saving. Oscillator selections and operation are selected through a combination of configuration options and relevant control registers.

Oscillator Overview

In addition to being the source of the main system clock the oscillators also provide clock sources for the Watchdog Timer and Time Base Interrupts. External oscillators requiring some external components as well as fully integrated internal oscillators, requiring no external components, are provided to form a wide range of both fast and slow system oscillators. The higher frequency oscillators provide higher performance but carry with it the disadvantage of higher power requirements, while the opposite is of course true for the lower frequency oscillators. With the capability of dynamically switching between fast and slow system clock, the devices have the flexibility to optimize the performance/power ratio, a feature especially important in power sensitive portable applications.

Type	Name	Frequency	Pins
External High Speed Crystal	HXT	400kHz~16MHz	OSC1/OSC2
Internal High Speed RC	HIRC	4/8/12MHz	—
External Low Speed Crystal	LXT	32.768kHz	XT1/XT2
Internal Low Speed RC	LIRC	32kHz	—

Oscillator Types

System Clock Configurations

There are four methods of generating the system clock, two high speed oscillators and two low speed oscillators for the devices. The high speed oscillators are the external crystal/ceramic oscillator, HXT, and the internal 4/8/12MHz RC oscillator, HIRC. The low speed oscillators are the internal 32kHz RC oscillator, LIRC, and the external 32.768kHz crystal oscillator, LXT. Selecting whether the low or high speed oscillator is used as the system oscillator is implemented using the CKS2~CKS0 bits in the SCC register and as the system clock can be dynamically selected.

The actual source clock used for the low speed oscillator is chosen via the FSS bit in the SCC register while for the high speed oscillator the source clock is selected by the FHS bit in the SCC register. The frequency of the slow speed or high speed system clock is determined using the CKS2~CKS0 bits in the SCC register.

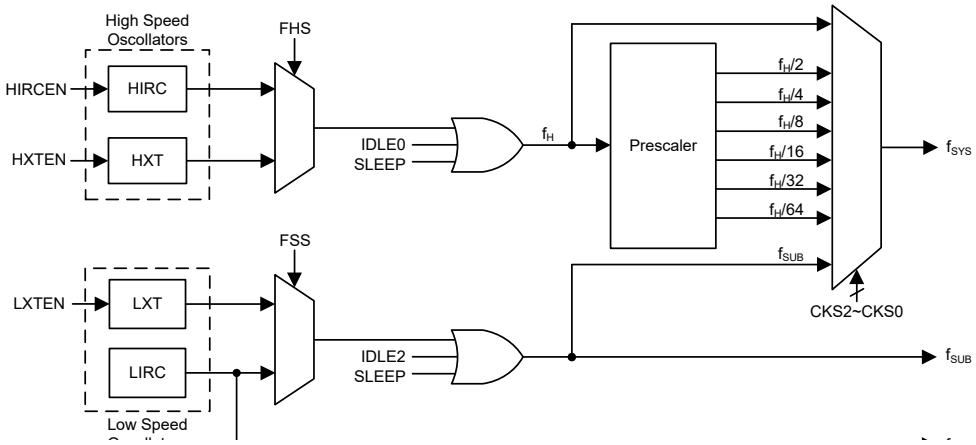

System Clock Configurations

External Crystal/Ceramic Oscillator – HXT

The External Crystal/Ceramic System Oscillator is one of the high frequency oscillator choices, which is selected via a software control bit, FHS. For most crystal oscillator configurations, the simple connection of a crystal across OSC1 and OSC2 will create the necessary phase shift and feedback for oscillation, without requiring external capacitors. However, for some crystal types and frequencies, to ensure oscillation, it may be necessary to add two small value capacitors, C1 and C2. Using a ceramic resonator will usually require two small value capacitors, C1 and C2, to be connected as shown for oscillation to occur. The values of C1 and C2 should be selected in consultation with the crystal or resonator manufacturer's specification.

For oscillator stability and to minimise the effects of noise and crosstalk, it is important to ensure that the crystal and any associated resistors and capacitors along with interconnecting lines are all located as close to the MCU as possible.

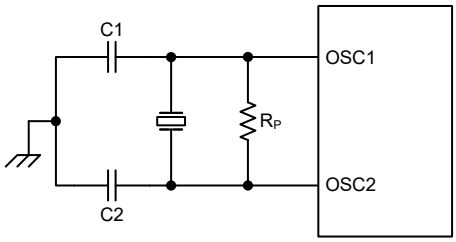

Note: 1. R_P is normally not required. C1 and C2 are required.
2. Although not shown OSC1/OSC2 pins have a parasitic capacitance of around 7pF.

Crystal/Resonator Oscillator – HXT

HXT Oscillator C1 and C2 Values		
Crystal Frequency	**C1**	**C2**
16MHz	0pF	0pF
12MHz	0pF	0pF
8MHz	0pF	0pF
4MHz	0pF	0pF
1MHz	100pF	100pF
Note: C1 and C2 values are for guidance only.		

Crystal Recommended Capacitor Values

Internal High Speed RC Oscillator – HIRC

The internal RC oscillator is one of the high frequency oscillator choices, which is selected via a software control bit, FHS. It is a fully integrated system oscillator requiring no external components. The internal RC oscillator has three fixed frequencies of 4MHz, 8MHz and 12MHz, which are selected by the HIRC1~HIRC0 bits in the HIRCC register. These bits must also be setup to match the selected configuration option frequency to ensure that the HIRC frequency accuracy specified in the A.C. Characteristics is achieved. Device trimming during the manufacturing process and the inclusion of internal frequency compensation circuits are used to ensure that the influence of the power supply voltage, temperature and process variations on the oscillation frequency are minimised.

External 32.768kHz Crystal Oscillator – LXT

The External 32.768kHz Crystal System Oscillator is one of the low frequency oscillator choices, which is selected via a software control bit, FSS. This clock source has a fixed frequency of 32.768kHz and requires a 32.768kHz crystal to be connected between pins XT1 and XT2. The external resistor and capacitor components connected to the 32.768kHz crystal are necessary to provide oscillation. For applications where precise frequencies are essential, these components may be required to provide frequency compensation due to different crystal manufacturing tolerances. After the LXT oscillator is enabled by setting the LXTEN bit to 1, there is a time delay associated with the LXT oscillator waiting for it to start-up.

When the microcontroller enters the SLEEP or IDLE Mode, the system clock is switched off to stop microcontroller activity and to conserve power. However, in many microcontroller applications it may be necessary to keep the internal timers operational even when the microcontroller is in the SLEEP or IDLE Mode. To do this, another clock, independent of the system clock, must be provided.

However, for some crystals, to ensure oscillation and accurate frequency generation, it is necessary to add two small value external capacitors, C1 and C2. The exact values of C1 and C2 should be selected in consultation with the crystal or resonator manufacturer's specification. The external parallel feedback resistor, R_P, is required.

The pin-shared software control bits determine if the XT1/XT2 pins are used for the LXT oscillator or as I/O or other pin-shared functional pins.

- If the LXT oscillator is not used for any clock source, the XT1/XT2 pins can be used as normal I/O or other pin-shared functional pins.
- If the LXT oscillator is used for any clock source, the 32.768kHz crystal should be connected to the XT1/XT2 pins.

For oscillator stability and to minimise the effects of noise and crosstalk, it is important to ensure that the crystal and any associated resistors and capacitors along with interconnecting lines are all located as close to the MCU as possible.

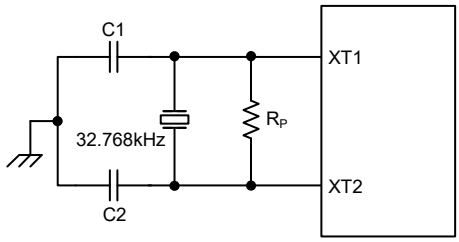

Note: 1. R_P, C1 and C2 are required.
2. Although not shown XT1/XT2 pins have a parasitic capacitance of around 7pF.

External LXT Oscillator

LXT Oscillator C1 and C2 Values		
Crystal Frequency	**C1**	**C2**
32.768kHz	10pF	10pF
Note: 1. C1 and C2 values are for guidance only. 2. R_P=5MΩ~10MΩ is recommended.		

32.768kHz Crystal Recommended Capacitor Values

LXT Oscillator Low Power Function

The LXT oscillator can function in one of two modes, the Speed-Up Mode and the Low-Power Mode. The mode selection is executed using the LXTSP bit in the LXTC register

LXTSP Bit	LXT Operating Mode
0	Low Power
1	Speed Up

When the LXTSP bit is set to high, the LXT Speed Up Mode will be enabled. In the Speed-Up Mode the LXT oscillator will power up and stabilise quickly. However, after the LXT oscillator has fully powered up, it can be placed into the Low-Power Mode by clearing the LXTSP bit to zero and the oscillator will continue to run but with reduced current consumption. It is important to note that the LXT operating mode switching must be properly controlled before the LXT oscillator clock is selected as the system clock source. Once the LXT oscillator clock is selected as the system clock source using the CKS bit field and FSS bit in the SCC register, the LXT oscillator operating mode cannot be changed.

It should be note, that no matter what condition the LXTSP is set to, the LXT oscillator will be always function normally. The only difference is that it will take more time to start up if in the Low Power Mode.

Internal 32kHz Oscillator – LIRC

The Internal 32kHz System Oscillator is one of the low frequency oscillator choices, which is selected via a software control bit, FSS. It is a fully integrated RC oscillator with a typical frequency of 32kHz, requiring no external components for its implementation. Device trimming during the manufacturing process and the inclusion of internal frequency compensation circuits are used to ensure that the influence of the power supply voltage, temperature and process variations on the oscillation frequency are minimised.

Operating Modes and System Clocks

Present day applications require that their microcontrollers have high performance but often still demand that they consume as little power as possible, conflicting requirements that are especially true in battery powered portable applications. The fast clocks required for high performance will by their nature increase current consumption and of course vice-versa lower speed clocks reduce current consumption. As Holtek has provided the devices with both high and low speed clock sources and the means to switch between them dynamically, the user can optimise the operation of their microcontroller to achieve the best performance/power ratio.

System Clocks

The devices have different clock sources for both the CPU and peripheral function operation. By providing the user with a wide range of clock selections using register programming, a clock system can be configured to obtain maximum application performance.

The main system clock, can come from either a high frequency, f_H, or low frequency, f_{SUB}, source, and is selected using the CKS2~CKS0 bits in the SCC register. The high speed system clock can be sourced from an HXT or HIRC oscillator, selected via configuring the FHS bit in the SCC register. The low speed system clock source can be sourced from the internal clock f_{SUB}. If f_{SUB} is selected then it can be sourced by either the LXT or LIRC oscillator, selected via configuring the FSS bit in the SCC register. The other choice, which is a divided version of the high speed system oscillator has a range of $f_H/2$~$f_H/64$.

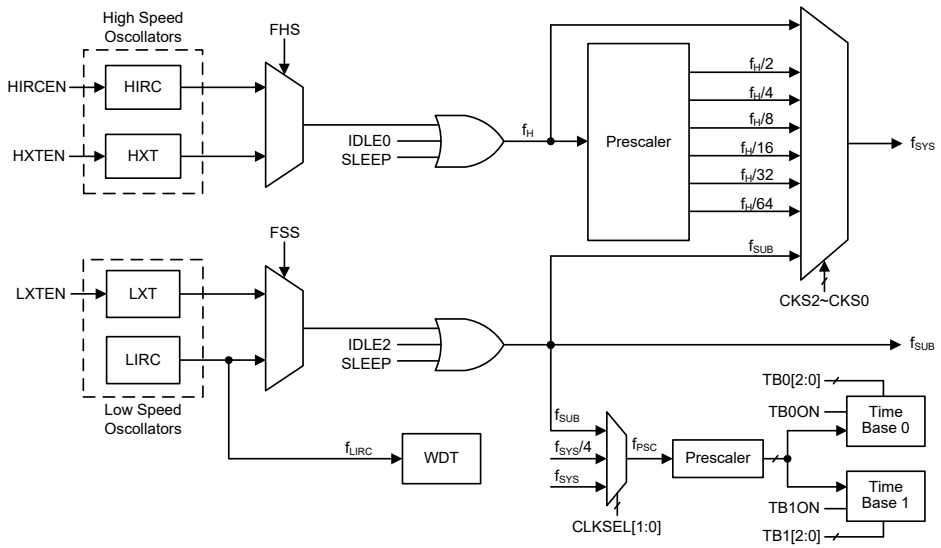

Device Clock Configurations

Note: When the system clock source f_{SYS} is switched to f_{SUB} from f_H, the high speed oscillators can be stopped to conserve the power or continue to oscillate to provide the clock source, f_H~$f_H/64$, for peripheral circuit to use, which is determined by configuring the corresponding high speed oscillator enable control bit.

System Operation Modes

There are six different modes of operation for the microcontroller, each one with its own special characteristics and which can be chosen according to the specific performance and power requirements of the application. There are two modes allowing normal operation of the microcontroller, the FAST Mode and SLOW Mode. The remaining four modes, the SLEEP, IDLE0, IDLE1 and IDLE2 Mode are used when the microcontroller CPU is switched off to conserve power.

Operation Mode	CPU	Register Setting			f_{SYS}	f_H	f_{SUB}	f_{LIRC}
		FHIDEN	FSIDEN	CKS2~CKS0				
FAST	On	x	x	000~110	f_H~$f_H/64$	On	On	On
SLOW	On	x	x	111	f_{SUB}	On/Off (1)	On	On
IDLE0	Off	0	1	000~110	Off	Off	On	On
				111	On			
IDLE1	Off	1	1	xxx	On	On	On	On
IDLE2	Off	1	0	000~110	On	On	Off	On
				111	Off			
SLEEP	Off	0	0	xxx	Off	Off	Off	On/Off (2)

"x": don't care

Note: 1. The f_H clock will be switched on or off by configuring the corresponding oscillator enable bit in the SLOW mode.

2. The f_{LIRC} clock can be on or off which is controlled by the WDT function being enabled or disabled in the SLEEP mode.

FAST Mode

This is one of the main operating modes where the microcontroller has all of its functions operational and where the system clock is provided by one of the high speed oscillators. This mode operates allowing the microcontroller to operate normally with a clock source will come from one of the high speed oscillators, either the HXT or HIRC oscillator. The high speed oscillator will however first be divided by a ratio ranging from 1 to 64, the actual ratio being selected by the CKS2~CKS0 bits in the SCC register. Although a high speed oscillator is used, running the microcontroller at a divided clock ratio reduces the operating current.

SLOW Mode

This is also a mode where the microcontroller operates normally although now with a slower speed clock source. The clock source used will be from f_{SUB}. The f_{SUB} clock is derived from either the LIRC or LXT oscillator determined by the FSS bit in the SCC register.

SLEEP Mode

The SLEEP Mode is entered when a HALT instruction is executed and when the FHIDEN and FSIDEN bits are low. In the SLEEP mode the CPU will be stopped, and the f_{SUB} clock to peripheral will be stopped too. However the f_{LIRC} clock will continue to operate if the WDT function is enabled by the WDTC register.

IDLE0 Mode

The IDLE0 Mode is entered when a HALT instruction is executed and when the FHIDEN bit in the SCC register is low and the FSIDEN bit in the SCC register is high. In the IDLE0 Mode the CPU will be switched off but the low speed oscillator will be turned on to drive some peripheral functions.

IDLE1 Mode

The IDLE1 Mode is entered when a HALT instruction is executed and when the FHIDEN bit in the SCC register is high and the FSIDEN bit in the SCC register is high. In the IDLE1 Mode the CPU will be switched off but both the high and low speed oscillators will be turned on to provide a clock source to keep some peripheral functions operational.

IDLE2 Mode

The IDLE2 Mode is entered when a HALT instruction is executed and when the FHIDEN bit in the SCC register is high and the FSIDEN bit in the SCC register is low. In the IDLE2 Mode the CPU will be switched off but the high speed oscillator will be turned on to provide a clock source to keep some peripheral functions operational.

Control Registers

The registers, SCC, HIRCC, HXTC and LXTC, are used to control the system clock and the corresponding oscillator configurations.

Register Name	Bit							
	7	6	5	4	3	2	1	0
SCC	CKS2	CKS1	CKS0	—	FHS	FSS	FHIDEN	FSIDEN
HIRCC	—	—	—	—	HIRC1	HIRC0	HIRCF	HIRCEN
HXTC	—	—	—	—	—	HXTM	HXTF	HXTEN
LXTC	—	—	—	—	—	LXTSP	LXTF	LXTEN

System Operating Mode Control Register List

• **SCC Register**

Bit	7	6	5	4	3	2	1	0
Name	CKS2	CKS1	CKS0	—	FHS	FSS	FHIDEN	FSIDEN
R/W	R/W	R/W	R/W	—	R/W	R/W	R/W	R/W
POR	0	0	0	—	0	0	0	0

Bit 7~5 **CKS2~CKS0**: System clock selection
000: f_H
001: $f_H/2$
010: $f_H/4$
011: $f_H/8$
100: $f_H/16$
101: $f_H/32$
110: $f_H/64$
111: f_{SUB}

These three bits are used to select which clock is used as the system clock source. In addition to the system clock source directly derived from f_H or f_{SUB}, a divided version of the high speed system oscillator can also be chosen as the system clock source.

Bit 4 Unimplemented, read as "0"

Bit 3 **FHS**: High Frequency clock selection
0: HIRC
1: HXT

Bit 2 **FSS**: Low Frequency clock selection
0: LIRC
1: LXT

Bit 1 **FHIDEN**: High Frequency oscillator control when CPU is switched off
0: Disable
1: Enable

This bit is used to control whether the high speed oscillator is activated or stopped when the CPU is switched off by executing a "HALT" instruction.

Bit 0 **FSIDEN**: Low Frequency oscillator control when CPU is switched off
0: Disable
1: Enable

This bit is used to control whether the low speed oscillator is activated or stopped when the CPU is switched off by executing a "HALT" instruction.

Note: A certain delay is required before the relevant clock is successfully switched to the target clock source after any clock switching setup using the CKS2~CKS0 bits, FHS bit or FSS bit. A proper delay time must be arranged before executing the following operations which require immediate reaction with the target clock source.

Clock switching delay time=$4\times t_{SYS}+[0\sim(1.5\times t_{Curr.}+0.5\times t_{Tar.})]$, where $t_{Curr.}$ indicates the current clock period, $t_{Tar.}$ indicates the target clock period and t_{SYS} indicates the current system clock period.

• **HIRCC Register**

Bit	7	6	5	4	3	2	1	0
Name	—	—	—	—	HIRC1	HIRC0	HIRCF	HIRCEN
R/W	—	—	—	—	R/W	R/W	R	R/W
POR	—	—	—	—	0	0	0	1

Bit 7~4 Unimplemented, read as "0"

Bit 3~2 **HIRC1~HIRC0**: HIRC frequency selection
00: 4MHz
01: 8MHz
10: 12MHz
11: 4MHz

When the HIRC oscillator is enabled or the HIRC frequency selection is changed by the application program, the clock frequency will automatically be changed after the HIRCF flag is set to 1.

It is recommended that the HIRC frequency selected by these two bits should be the same with the frequency determined by the configuration option to achieve the HIRC frequency accuracy specified in the A.C. Characteristics.

Bit 1 **HIRCF**: HIRC oscillator stable flag
0: HIRC unstable
1: HIRC stable

This bit is used to indicate whether the HIRC oscillator is stable or not. When the HIRCEN bit is set to 1 to enable the HIRC oscillator or the HIRC frequency selection is changed by the application program, the HIRCF bit will first be cleared to 0 and then set to 1 after the HIRC oscillator is stable.

Bit 0 **HIRCEN**: HIRC oscillator enable control
0: Disable
1: Enable

• HXTC Register

Bit	7	6	5	4	3	2	1	0
Name	—	—	—	—	—	HXTM	HXTF	HXTEN
R/W	—	—	—	—	—	R/W	R	R/W
POR	—	—	—	—	—	0	0	0

Bit 7~3 Unimplemented, read as “0”

Bit 2 **HXTM**: HXT mode selection
0: HXT frequency ≤ 10MHz (sink/source current is smaller)
1: HXT frequency > 10MHz (sink/source current is larger)

Note that this bit should be configured correctly according to the used HXT frequency. If HXTM=0 while the HXT frequency is larger than 10MHz, the oscillation performance at a low voltage condition may be not well. If HXTM=1 while the HXT frequency is less than 10MHz, the oscillator frequency and the current may be abnormal.

This bit must be properly configured before the HXT is enabled. When the OSC1 and OSC2 pin functions have been enabled using relevant pin-shared control bits and the HXTEN bit has been set to 1 to enable the HXT oscillator, it is invalid to change the value of the HXTM bit. When the OSC1 or OSC2 pin function is disabled, then the HXTM bit can be changed by software, regardless of the HXTEN bit value.

Bit 1 **HXTF**: HXT oscillator stable flag
0: HXT unstable
1: HXT stable

This bit is used to indicate whether the HXT oscillator is stable or not. When the HXTEN bit is set to 1 to enable the HXT oscillator, the HXTF bit will first be cleared to 0 and then set to 1 after the HXT oscillator is stable.

Bit 0 **HXTEN**: HXT oscillator enable control
0: Disable
1: Enable

• LXTC Register

Bit	7	6	5	4	3	2	1	0
Name	—	—	—	—	—	LXTSP	LXTF	LXTEN
R/W	—	—	—	—	—	R/W	R	R/W
POR	—	—	—	—	—	0	0	0

Bit 7~1 Unimplemented, read as “0”

Bit 2 **LXTSP**: LXT Speed up control
0: Disable – Low power
1: Enable – Speed up

This bit is used to control whether the LXT oscillator is operating in the low power or Speed-Up mode. When the LXTSP bit is set high, the LXT oscillator will oscillate quickly but consume more power. If the LXTSP bit is cleared to zero, the LXT oscillator will consume less power but take longer time to stablise. It is important to note that this bit cannot be changed after the LXT oscillator is selected as the system clock source using the CKS2~CKS0 and FSS bits in the SCC register.

Bit 1 **LXTF**: LXT oscillator stable flag
0: LXT unstable
1: LXT stable

This bit is used to indicate whether the LXT oscillator is stable or not. When the LXTEN bit is set to 1 to enable the LXT oscillator, the LXTF bit will first be cleared to 0 and then set to 1 after the LXT oscillator is stable.

Bit 0 **LXTEN**: LXT oscillator enable control
0: Disable
1: Enable

Operating Mode Switching

The devices can switch between operating modes dynamically allowing the user to select the best performance/power ratio for the present task in hand. In this way microcontroller operations that do not require high performance can be executed using slower clocks thus requiring less operating current and prolonging battery life in portable applications.

In simple terms, Mode Switching between the FAST Mode and SLOW Mode is executed using the CKS2~CKS0 bits in the SCC register while Mode Switching from the FAST/SLOW Modes to the SLEEP/IDLE Modes is executed via the HALT instruction. When a HALT instruction is executed, whether the devices enter the IDLE Mode or the SLEEP Mode is determined by the condition of the FHIDEN and FSIDEN bits in the SCC register.

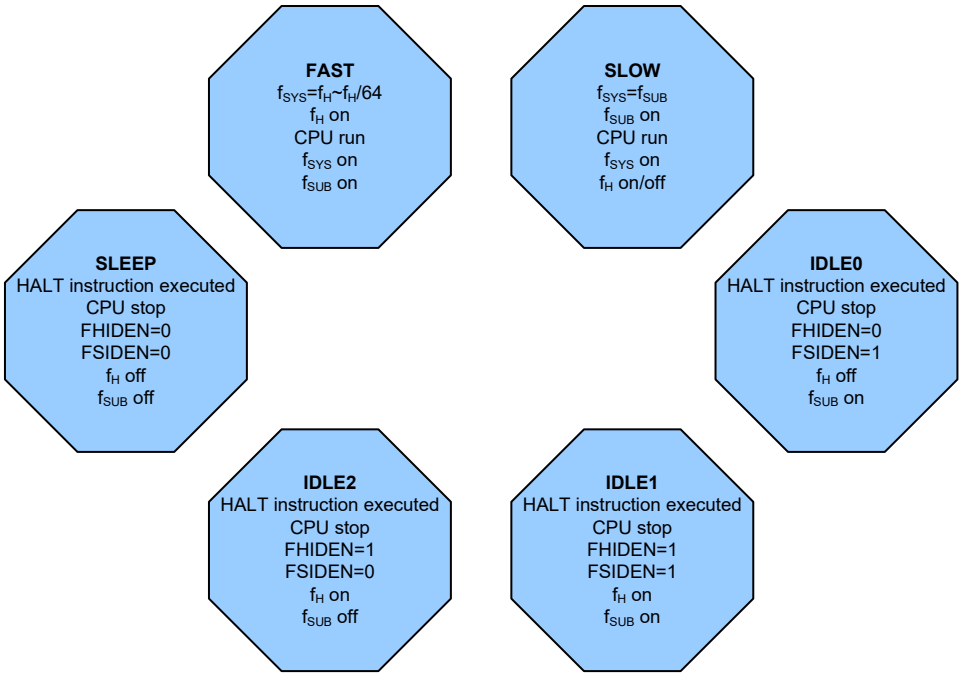

FAST Mode to SLOW Mode Switching

When running in the FAST Mode, which uses the high speed system oscillator, and therefore consumes more power, the system clock can switch to run in the SLOW Mode by setting the CKS2~CKS0 bits to "111" in the SCC register. This will then use the low speed system oscillator which will consume less power. Users may decide to do this for certain operations which do not require high performance and can subsequently reduce power consumption.

The SLOW Mode is sourced from the LXT or LIRC oscillator determined by the FSS bit in the SCC register and therefore requires these oscillators to be stable before full mode switching occurs.

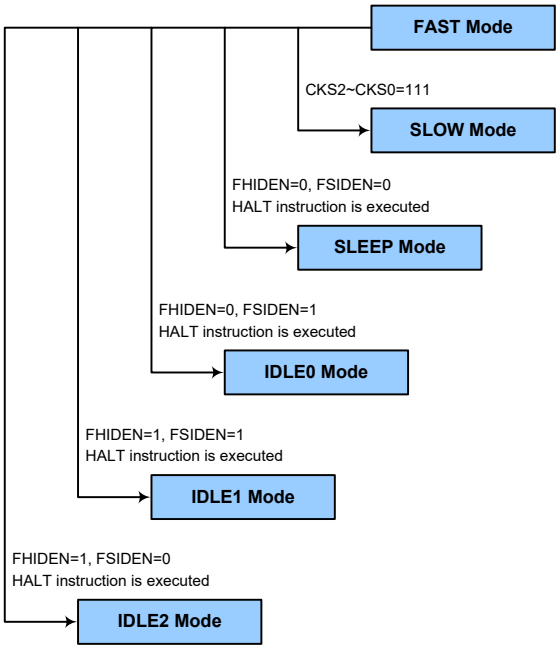

SLOW Mode to FAST Mode Switching

In SLOW mode the system clock is derived from f_{SUB}. When system clock is switched back to the FAST mode from f_{SUB}, the CKS2~CKS0 bits should be set to "000"~"110" and then the system clock will respectively be switched to f_H~f_H/64.

However, if f_H is not used in SLOW mode and thus switched off, it will take some time to re-oscillate and stabilise when switching to the FAST mode from the SLOW Mode. This is monitored using the HXTF bit in the HXTC register or the HIRCF bit in the HIRCC register. The time duration required for the high speed system oscillator stabilization is specified in the System Start Up Time Characteristics.

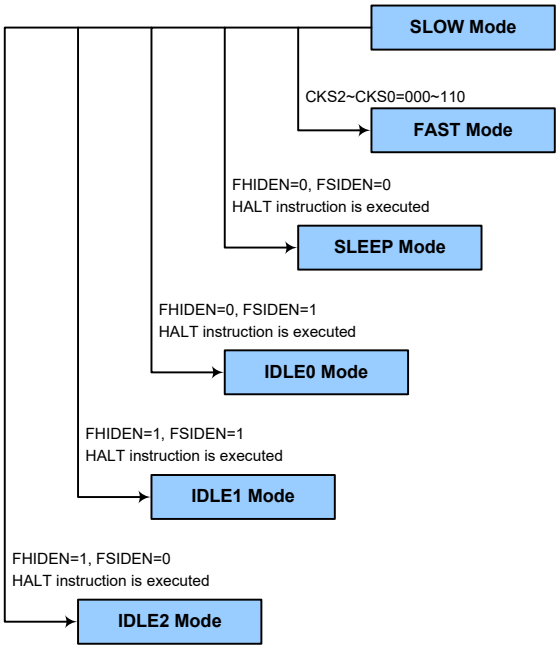

Entering the SLEEP Mode

There is only one way for the devices to enter the SLEEP Mode and that is to execute the "HALT" instruction in the application program with both the FHIDEN and FSIDEN bits in the SCC register equal to "0". In this mode all the clocks and functions will be switched off except the WDT function. When this instruction is executed under the conditions described above, the following will occur:

- The system clock will be stopped and the application program will stop at the "HALT" instruction.
- The Data Memory contents and registers will maintain their present condition.
- The I/O ports will maintain their present conditions.
- In the status register, the Power Down flag PDF will be set, and WDT timeout flag TO will be cleared.
- The WDT will be cleared and resume counting if the WDT function is enabled. If the WDT function is disabled, the WDT will be cleared and then stopped.

Entering the IDLE0 Mode

There is only one way for the devices to enter the IDLE0 Mode and that is to execute the "HALT" instruction in the application program with the FHIDEN bit in the SCC register equal to "0" and the FSIDEN bit in the SCC register equal to "1". When this instruction is executed under the conditions described above, the following will occur:

- The f_H clock will be stopped and the application program will stop at the "HALT" instruction, but the f_{SUB} clock will be on.
- The Data Memory contents and registers will maintain their present condition.
- The I/O ports will maintain their present conditions.
- In the status register, the Power Down flag PDF will be set, and WDT timeout flag TO will be cleared.
- The WDT will be cleared and resume counting if the WDT function is enabled. If the WDT function is disabled, the WDT will be cleared and then stopped.

Entering the IDLE1 Mode

There is only one way for the devices to enter the IDLE1 Mode and that is to execute the "HALT" instruction in the application program with both the FHIDEN and FSIDEN bits in the SCC register equal to "1". When this instruction is executed under the conditions described above, the following will occur:

- The f_H and f_{SUB} clocks will be on but the application program will stop at the "HALT" instruction.
- The Data Memory contents and registers will maintain their present condition.
- The I/O ports will maintain their present conditions.
- In the status register, the Power Down flag PDF will be set, and WDT timeout flag TO will be cleared.
- The WDT will be cleared and resume counting if the WDT function is enabled. If the WDT function is disabled, the WDT will be cleared and then stopped.

Entering the IDLE2 Mode

There is only one way for the devices to enter the IDLE2 Mode and that is to execute the "HALT" instruction in the application program with the FHIDEN bit in the SCC register equal to "1" and the FSIDEN bit in the SCC register equal to "0". When this instruction is executed under the conditions described above, the following will occur:

- The f_H clock will be on but the f_{SUB} clock will be off and the application program will stop at the "HALT" instruction.
- The Data Memory contents and registers will maintain their present condition.
- The I/O ports will maintain their present conditions.
- In the status register, the Power Down flag PDF will be set, and WDT timeout flag TO will be cleared.
- The WDT will be cleared and resume counting if the WDT function is enabled. If the WDT function is disabled, the WDT will be cleared and then stopped.

Standby Current Considerations

As the main reason for entering the SLEEP or IDLE Mode is to keep the current consumption of the devices to as low a value as possible, perhaps only in the order of several micro-amps except in the IDLE1 and IDLE2 Mode, there are other considerations which must also be taken into account by the circuit designer if the power consumption is to be minimised. Special attention must be made to the I/O pins on the devices. All high-impedance input pins must be connected to either a fixed high or low level as any floating input pins could create internal oscillations and result in increased current consumption. This also applies to the devices which have different package types, as there may be unbonded pins. These must either be setup as outputs or if setup as inputs must have pull-high resistors connected.

Care must also be taken with the loads, which are connected to I/O pins, which are setup as outputs. These should be placed in a condition in which minimum current is drawn or connected only to external circuits that do not draw current, such as other CMOS inputs. Also note that additional standby current will also be required if the LIRC oscillator has enabled.

In the IDLE1 and IDLE2 Mode the high speed oscillator is on, if the peripheral function clock source is derived from the high speed oscillator, the additional standby current will also be perhaps in the order of several hundred micro-amps.

Wake-up

To minimise power consumption the devices can enter the SLEEP or any IDLE Mode, where the CPU will be switched off. However, when the devices are woken up again, they will take a considerable time for the original system oscillator to restart, stabilise and allow normal operation to resume.

After the system enters the SLEEP or IDLE Mode, it can be woken up from one of various sources listed as follows:

- An external falling edge on Port A
- A system interrupt
- A WDT overflow

When the devices execute the "HALT" instruction, they will enter the SLEEP or IDLE mode and the PDF flag will be set to 1. The PDF flag will be cleared to 0 if the devices experience a system power-up or execute the clear Watchdog Timer instruction. If the system is woken up by a WDT overflow, a Watchdog Timer reset will be initiated and the TO flag will be set to 1. The TO flag is set if a WDT time-out occurs and causes a wake-up that only resets the Program Counter and Stack Pointer, other flags remain in their original status.

Each pin on Port A can be setup using the PAWU register to permit a negative transition on the pin to wake-up the system. When a Port A pin wake-up occurs, the program will resume execution at the instruction following the "HALT" instruction. If the system is woken up by an interrupt, then two possible situations may occur. The first is where the related interrupt is disabled or the interrupt is enabled but the stack is full, in which case the program will resume execution at the instruction following the "HALT" instruction. In this situation, the interrupt which woke-up the devices will not be immediately serviced, but will rather be serviced later when the related interrupt is finally enabled or when a stack level becomes free. The other situation is where the related interrupt is enabled and the stack is not full, in which case the regular interrupt response takes place. If an interrupt request flag is set high before entering the SLEEP or IDLE Mode, the wake-up function of the related interrupt will be disabled.

Watchdog Timer

The Watchdog Timer is provided to prevent program malfunctions or sequences from jumping to unknown locations, due to certain uncontrollable external events such as electrical noise.

Watchdog Timer Clock Source

The Watchdog Timer clock source is provided by the internal clock, f_{LIRC} which is sourced from the LIRC oscillator. The LIRC internal oscillator has an approximate frequency of 32kHz and this specified internal clock period can vary with V_{DD}, temperature and process variations. The Watchdog Timer source clock is then subdivided by a ratio of 2^8 to 2^{18} to give longer timeouts, the actual value being chosen using the WS2~WS0 bits in the WDTC register.

Watchdog Timer Control Register

A single register, WDTC, controls the required timeout period as well as the WDT enable/disable and software reset MCU operation. This register controls the overall operation of the Watchdog Timer.

• **WDTC Register**

Bit	7	6	5	4	3	2	1	0
Name	WE4	WE3	WE2	WE1	WE0	WS2	WS1	WS0
R/W	R/W	R/W	R/W	R/W	R/W	R/W	R/W	R/W
POR	0	1	0	1	0	0	1	1

Bit 7~3 **WE4~WE0**: WDT function enable control
10101: Disable
01010: Enable
Other values: Reset MCU

If these bits are changed due to adverse environmental conditions, the microcontroller will be reset. The reset operation will be activated after a delay time, t_{SRESET}, and the WRF bit in the RSTFC register will be set to 1.

Bit 2~0 **WS2~WS0**: WDT time-out period selection
000: $2^8/f_{LIRC}$
001: $2^{10}/f_{LIRC}$
010: $2^{12}/f_{LIRC}$
011: $2^{14}/f_{LIRC}$
100: $2^{15}/f_{LIRC}$
101: $2^{16}/f_{LIRC}$
110: $2^{17}/f_{LIRC}$
111: $2^{18}/f_{LIRC}$

These three bits determine the division ratio of the watchdog timer source clock, which in turn determines the time-out period.

• **RSTFC Register**

Bit	7	6	5	4	3	2	1	0
Name	—	—	—	—	RSTF	LVRF	LRF	WRF
R/W	—	—	—	—	R/W	R/W	R/W	R/W
POR	—	—	—	—	0	x	0	0

"x": unknown

Bit 7~4 Unimplemented, read as "0"

Bit 3 **RSTF**: Reset control register software reset flag
Refer to Internal Reset Control section.

Bit 2 **LVRF**: LVR function reset flag
Refer to the Low Voltage Reset section.

Bit 1 **LRF**: LVR control register software reset flag
Refer to the Low Voltage Reset section.

Bit 0 **WRF**: WDT control register software reset flag
0: Not occurred
1: Occurred

This bit is set to 1 by the WDT control register software reset and cleared by the application program. Note that this bit can only be cleared to 0 by the application program.

Watchdog Timer Operation

The Watchdog Timer operates by providing a device reset when its timer overflows. This means that in the application program and during normal operation the user has to strategically clear the Watchdog Timer before it overflows to prevent the Watchdog Timer from executing a reset. This is done using the clear watchdog instruction. If the program malfunctions for whatever reason, jumps to an unknown location, or enters an endless loop, the clear instruction will not be executed in the correct manner, in which case the Watchdog Timer will overflow and reset the devices. With regard to the Watchdog Timer enable/disable function, there are five bits, WE4~WE0, in the WDTC register to offer the enable/disable control and reset control of the Watchdog Timer. The WDT function will be enabled when the WE4~WE0 bits are set to a value of 01010B while the WDT function will be disabled if the WE4~WE0 bits are equal to 10101B. If the WE4~WE0 bits are set to any other values rather than 01010B and 10101B, it will reset the devices after a delay time, t_{SRESET}. After power on these bits will have a value of 01010B.

WE4~WE0 Bits	WDT Function
10101B	Disable
01010B	Enable
Any other value	Reset MCU

Watchdog Timer Function Control

Under normal program operation, a Watchdog Timer time-out will initialise a device reset and set the status bit TO. However, if the system is in the SLEEP or IDLE Mode, when a Watchdog Timer time-out occurs, the TO bit in the status register will be set and only the Program Counter and Stack Pointer will be reset. Three methods can be adopted to clear the contents of the Watchdog Timer. The first is a WDT software reset, which means a certain value except 01010B and 10101B written into the WE4~WE0 field, the second is using the Watchdog Timer software clear instruction and the third is via a HALT instruction.

There is only one method of using software instruction to clear the Watchdog Timer. That is to use the single "CLR WDT" instruction to clear the WDT contents.

The maximum time out period is when the 2^{18} division ratio is selected. As an example, with a 32kHz LIRC oscillator as its source clock, this will give a maximum watchdog period of around 8 second for the 2^{18} division ratio and a minimum timeout of 8ms for the 2^{8} division ration.

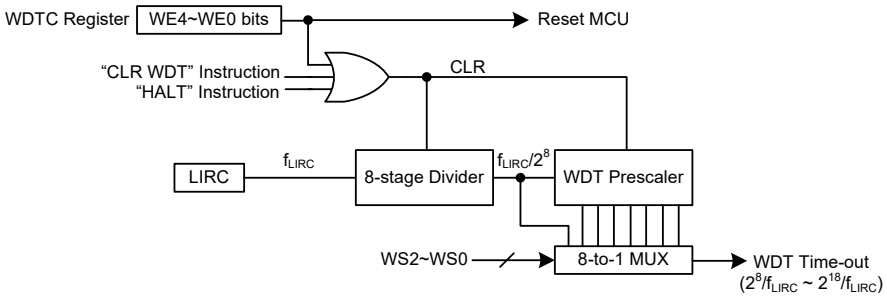

Watchdog Timer

Reset and Initialisation

A reset function is a fundamental part of any microcontroller ensuring that the devices can be set to some predetermined condition irrespective of outside parameters. The most important reset condition is after power is first applied to the microcontroller. In this case, internal circuitry will ensure that the microcontroller, after a short delay, will be in a well defined state and ready to execute the first program instruction. After this power-on reset, certain important internal registers will be set to defined states before the program commences. One of these registers is the Program Counter, which will be reset to zero forcing the microcontroller to begin program execution from the lowest Program Memory address.

In addition to the power-on reset, another reset exists in the form of a Low Voltage Reset, LVR, where a full reset is implemented in situations where the power supply voltage falls below a certain threshold. Another type of reset is when the Watchdog Timer overflows and resets the microcontroller. All types of reset operations result in different register conditions being setup.

Reset Functions

There are several ways in which a microcontroller reset can occur through events occurring internally.

Power-on Reset

The most fundamental and unavoidable reset is the one that occurs after power is first applied to the microcontroller. As well as ensuring that the Program Memory begins execution from the first memory address, a power-on reset also ensures that certain other registers are preset to known conditions. All the I/O port and port control registers will power up in a high condition ensuring that all pins will be first set to inputs.

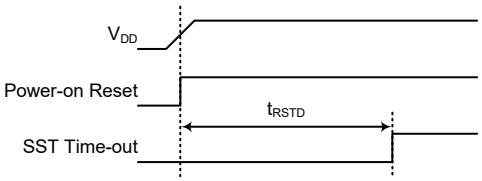

Power-On Reset Timing Chart

Internal Reset Control

There is an internal reset control register, RSTC, which is used to provide a reset when the devices operate abnormally due to the environmental noise interference. If the content of the RSTC register is set to any value other than 01010101B or 10101010B, it will reset the devices after a delay time, t_{SRESET}. After power on the register will have a value of 01010101B.

RSTC7~RSTC0 Bits	Reset Function
01010101B	No operation
10101010B	No operation
Any other value	Reset MCU

Internal Reset Function Control

• **RSTC Register**

Bit	7	6	5	4	3	2	1	0
Name	RSTC7	RSTC6	RSTC5	RSTC4	RSTC3	RSTC2	RSTC1	RSTC0
R/W	R/W	R/W	R/W	R/W	R/W	R/W	R/W	R/W
POR	0	1	0	1	0	1	0	1

Bit 7~0 **RSTC7~RSTC0**: Reset function control
01010101: No operation
10101010: No operation
Other values: Reset MCU

If these bits are changed due to adverse environmental conditions, the microcontroller will be reset. The reset operation will be activated after a delay time, t_{SRESET} and the RSTF bit in the RSTFC register will be set to 1.

• **RSTFC Register**

Bit	7	6	5	4	3	2	1	0
Name	—	—	—	—	RSTF	LVRF	LRF	WRF
R/W	—	—	—	—	R/W	R/W	R/W	R/W
POR	—	—	—	—	0	x	0	0

"x": unknown

Bit 7~4 Unimplemented, read as "0"

Bit 3 **RSTF**: Reset control register software reset flag
0: Not occurred
1: Occurred

This bit is set high by the RSTC control register software reset and cleared to zero by the application program. Note that this bit can only be cleared to 0 by the application program.

Bit 2 **LVRF**: LVR function reset flag
Refer to the Low Voltage Reset section.

Bit 1 **LRF**: LVR control register software reset flag
Refer to the Low Voltage Reset section.

Bit 0 **WRF**: WDT control register software reset flag
Refer to the Watchdog Timer Control Register section.

Low Voltage Reset – LVR

The microcontrollers contain a low voltage reset circuit in order to monitor the supply voltage of the devices. The LVR function is always enabled in the FAST and SLOW modes with a specific LVR voltage, V_{LVR}. If the supply voltage of the devices drop to within a range of 0.9V~V_{LVR} such as might occur when changing the battery, the LVR will automatically reset the devices internally and the LVRF bit in the RSTFC register will also be set to 1. For a valid LVR signal, a low supply voltage, i.e., a voltage in the range between 0.9V~V_{LVR} must exist for a time greater than that specified by t_{LVR} in the LVR/LVD Electrical Characteristics. If the duration of the low supply voltage state does not exceed this value, the LVR will ignore the low supply voltage and will not perform a reset function. The actual V_{LVR} value can be selected by the LVS bits in the LVRC register. If the LVS7~LVS0 bits have any other values, which may perhaps occur due to adverse environmental conditions such as noise, the LVR will reset the devices after a delay time, t_{SRESET}. When this happens, the LRF bit in the RSTFC register will be set to 1. Note that the LVR function will be automatically disabled when the devices enter the SLEEP/IDLE mode.

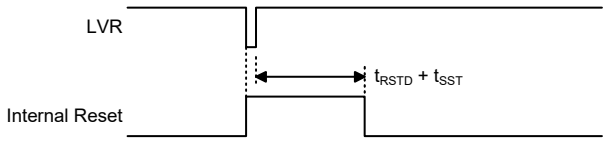

Low Voltage Reset Timing Chart

- **LVRC Register**

Bit	7	6	5	4	3	2	1	0
Name	LVS7	LVS6	LVS5	LVS4	LVS3	LVS2	LVS1	LVS0
R/W	R/W	R/W	R/W	R/W	R/W	R/W	R/W	R/W
POR	0	1	0	1	0	1	0	1

Bit 7~0 **LVS7~LVS0**: LVR voltage selection
01010101: 2.1V
00110011: 2.55V
10011001: 3.15V
10101010: 3.8V
Other values: Generates a MCU reset – register is reset to POR value

When an actual low voltage condition occurs, as specified by one of the four defined LVR voltage values above, an MCU reset will be generated. The reset operation will be activated after the low voltage condition keeps for greater than a t_{LVR} time. In this situation the register contents will remain the same after such a reset occurs.

Any register value, other than the four defined register values above, will also result in the generation of an MCU reset. The reset operation will be activated after a delay time, t_{SRESET}. However in this situation the register contents will be reset to the POR value.

- **TLVRC Register**

Bit	7	6	5	4	3	2	1	0
Name	—	—	—	—	—	—	TLVR1	TLVR0
R/W	—	—	—	—	—	—	R/W	R/W
POR	—	—	—	—	—	—	0	1

Bit 7~2 Unimplemented, read as “0”

Bit 1~0 **TLVR1~TLVR0**: Minimum low voltage width to reset time (t_{LVR}) selection
00: (7~8)×t_{LIRC}
01: (31~32)×t_{LIRC}
10: (63~64)×t_{LIRC}
11: (127~128)×t_{LIRC}

- **RSTFC Register**

Bit	7	6	5	4	3	2	1	0
Name	—	—	—	—	RSTF	LVRF	LRF	WRF
R/W	—	—	—	—	R/W	R/W	R/W	R/W
POR	—	—	—	—	0	x	0	0

“x”: unknown

Bit 7~4 Unimplemented, read as “0”

Bit 3 **RSTF**: Reset control register software reset flag
Refer to the Internal Reset Control section.

Bit 2 **LVRF**: LVR function reset flag
0: Not occurred
1: Occurred
This bit is set high when a specific Low Voltage Reset situation condition occurs. This bit can only be cleared to zero by the application program.

Bit 1 **LRF**: LVR control register software reset flag
0: Not occurred
1: Occurred
This bit is set high if the LVRC register contains any non-defined LVR voltage register values. This in effect acts like a software-reset function. This bit can only be cleared to zero by the application program.

Bit 0 **WRF**: WDT control register software reset flag
Refer to the Watchdog Timer Control Register section.

IAP Reset

When a specific value of "55H" is written into the FC1 register, a reset signal will be generated to reset the whole devices. Refer to the IAP section for more associated details.

Watchdog Time-out Reset during Normal Operation

The Watchdog time-out Reset during normal operation in the FAST or SLOW Mode is the same as the hardware Low Voltage Reset except that the Watchdog time-out flag TO will be set to "1".

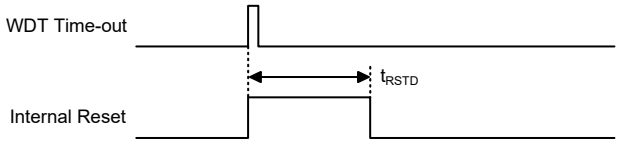

WDT Time-out Reset during Normal Operation Timing Chart

Watchdog Time-out Reset during SLEEP or IDLE Mode

The Watchdog time-out Reset during SLEEP or IDLE Mode is a little different from other kinds of reset. Most of the conditions remain unchanged except that the Program Counter and the Stack Pointer will be cleared to "0" and the TO and PDF flags will be set to "1". Refer to the System Start Up Time Characteristics for t_{SST} details.

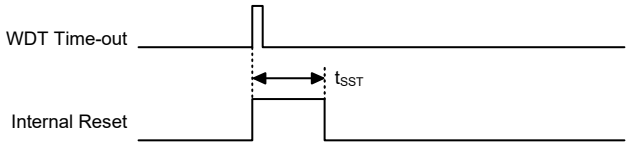

WDT Time-out Reset during SLEEP or IDLE Mode Timing Chart

Reset Initial Conditions

The different types of reset described affect the reset flags in different ways. These flags, known as PDF and TO are located in the status register and are controlled by various microcontroller operations, such as the SLEEP or IDLE Mode function or Watchdog Timer. The reset flags are shown in the table:

TO	PDF	RESET Conditions
0	0	Power-on reset
u	u	LVR reset during FAST or SLOW Mode operation
1	u	WDT time-out reset during FAST or SLOW Mode operation
1	1	WDT time-out reset during IDLE or SLEEP Mode operation

"u": unchanged

The following table indicates the way in which the various components of the microcontroller are affected after a power-on reset occurs.

Item	Condition After RESET
Program Counter	Reset to zero
Interrupts	All interrupts will be disabled
WDT, Time Bases	Clear after reset, WDT begins counting
Timer Modules	Timer Modules will be turned off
Input/Output Ports	I/O ports will be setup as inputs
Stack Pointer	Stack Pointer will point to the top of the stack

The different kinds of resets all affect the internal registers of the microcontroller in different ways. To ensure reliable continuation of normal program execution after a reset occurs, it is important to know what condition the microcontroller is in after a particular reset occurs. The following table describes how each type of reset affects the microcontroller internal registers.

Register	BH67F5265	BH67F5275	Power On Reset	LVR Reset (Normal Operation)	WDT Time-out (Normal Operation)	WDT Time-out (IDLE/SLEEP)
IAR0	●	●	0000 0000	0000 0000	0000 0000	uuuu uuuu
MP0	●	●	0000 0000	0000 0000	0000 0000	uuuu uuuu
IAR1	●	●	0000 0000	0000 0000	0000 0000	uuuu uuuu
MP1L	●	●	0000 0000	0000 0000	0000 0000	uuuu uuuu
MP1H	●	●	0000 0000	0000 0000	0000 0000	uuuu uuuu
ACC	●	●	xxxx xxxx	uuuu uuuu	uuuu uuuu	uuuu uuuu
PCL	●	●	0000 0000	0000 0000	0000 0000	0000 0000
TBLP	●	●	xxxx xxxx	uuuu uuuu	uuuu uuuu	uuuu uuuu
TBLH	●	●	xxxx xxxx	uuuu uuuu	uuuu uuuu	uuuu uuuu
TBHP	●		--xx xxxx	--uu uuuu	--uu uuuu	--uu uuuu
		●	-xxx xxxx	-uuu uuuu	-uuu uuuu	-uuu uuuu
STATUS	●	●	xx00 xxxx	uuuu uuuu	uu1u uuuu	uu11 uuuu
PBP	●		---- ---0	---- ---0	---- ---0	---- ---u
		●	---- --00	---- --00	---- --00	---- --uu
IAR2	●	●	0000 0000	0000 0000	0000 0000	uuuu uuuu
MP2L	●	●	0000 0000	0000 0000	0000 0000	uuuu uuuu
MP2H	●	●	0000 0000	0000 0000	0000 0000	uuuu uuuu
RSTFC	●	●	---- 0x00	---- u1uu	---- uuuu	---- uuuu
SCC	●	●	000- 0000	000- 0000	000- 0000	uuu- uuuu
HIRCC	●	●	---- 0001	---- 0001	---- 0001	---- uuuu
HXTC	●	●	---- -000	---- -000	---- -000	---- -uuu
LXTC	●	●	---- -000	---- -000	---- -000	---- -uuu
PA	●	●	1111 1111	1111 1111	1111 1111	uuuu uuuu
PAC	●	●	1111 1111	1111 1111	1111 1111	uuuu uuuu
PAPU	●	●	0000 0000	0000 0000	0000 0000	uuuu uuuu
PAWU	●	●	0000 0000	0000 0000	0000 0000	uuuu uuuu
RSTC	●	●	0101 0101	0101 0101	0101 0101	uuuu uuuu
LVRC	●	●	0101 0101	uuuu uuuu	0101 0101	uuuu uuuu
LVDC	●	●	--00 0000	--00 0000	--00 0000	--uu uuuu
MFI0	●	●	0000 0000	0000 0000	0000 0000	uuuu uuuu
MFI1	●	●	0000 0000	0000 0000	0000 0000	uuuu uuuu

Register	BH67F5265	BH67F5275	Power On Reset	LVR Reset (Normal Operation)	WDT Time-out (Normal Operation)	WDT Time-out (IDLE/SLEEP)
MFI2	●	●	--00 --00	--00 --00	--00 --00	--uu --uu
WDTC	●	●	0101 0011	0101 0011	0101 0011	uuuu uuuu
INTEG	●	●	---- 0000	---- 0000	---- 0000	---- uuuu
INTC0	●	●	-000 0000	-000 0000	-000 0000	-uuu uuuu
INTC1	●	●	0000 0000	0000 0000	0000 0000	uuuu uuuu
INTC2	●	●	0000 0000	0000 0000	0000 0000	uuuu uuuu
INTC3		●	---0 ---0	---0 ---0	---0 ---0	---u ---u
PB	●	●	1111 1111	1111 1111	1111 1111	uuuu uuuu
PBC	●	●	1111 1111	1111 1111	1111 1111	uuuu uuuu
PBPU	●	●	0000 0000	0000 0000	0000 0000	uuuu uuuu
PC	●	●	1111 1111	1111 1111	1111 1111	uuuu uuuu
PCC	●	●	1111 1111	1111 1111	1111 1111	uuuu uuuu
PCPU	●	●	0000 0000	0000 0000	0000 0000	uuuu uuuu
MFI3		●	-000 -000	-000 -000	-000 -000	-uuu -uuu
PSCR	●	●	---- --00	---- --00	---- --00	---- --uu
USR	●	●	0000 1011	0000 1011	0000 1011	uuuu uuuu
UCR1	●	●	0000 00x0	0000 00x0	0000 00x0	uuuu uuuu
UCR2	●	●	0000 0000	0000 0000	0000 0000	uuuu uuuu
UCR3	●	●	---- ---0	---- ---0	---- ---0	---- ---u
BRDH	●	●	0000 0000	0000 0000	0000 0000	uuuu uuuu
BRDL	●	●	0000 0000	0000 0000	0000 0000	uuuu uuuu
UFCR	●	●	--00 0000	--00 0000	--00 0000	--uu uuuu
TXR_RXR	●	●	xxxx xxxx	xxxx xxxx	xxxx xxxx	uuuu uuuu
RxCNT	●	●	---- -000	---- -000	---- -000	---- -uuu
SIMC0	●	●	111- 0000	111- 0000	111- 0000	uuu- uuuu
SIMC1	●	●	1000 0001	1000 0001	1000 0001	uuuu uuuu
SIMD	●	●	xxxx xxxx	xxxx xxxx	xxxx xxxx	uuuu uuuu
SIMA/SIMC2	●	●	0000 0000	0000 0000	0000 0000	uuuu uuuu
SIMTOC	●	●	0000 0000	0000 0000	0000 0000	uuuu uuuu
SPIC0	●	●	111- --00	111- --00	111- --00	uuu- --uu
SPIC1	●	●	--00 0000	--00 0000	--00 0000	--uu uuuu
SPID	●	●	xxxx xxxx	xxxx xxxx	xxxx xxxx	uuuu uuuu
PG		●	1111 1111	1111 1111	1111 1111	uuuu uuuu
PGC		●	1111 1111	1111 1111	1111 1111	uuuu uuuu
PGPU		●	0000 0000	0000 0000	0000 0000	uuuu uuuu
EEAL	●	●	0000 0000	0000 0000	0000 0000	uuuu uuuu
EEAH	●		---- --00	---- --00	---- --00	---- --uu
		●	---- -000	---- -000	---- -000	---- -uuu
EED	●	●	0000 0000	0000 0000	0000 0000	uuuu uuuu
PE	●	●	1111 1111	1111 1111	1111 1111	uuuu uuuu
PEC	●	●	1111 1111	1111 1111	1111 1111	uuuu uuuu
PEPU	●	●	0000 0000	0000 0000	0000 0000	uuuu uuuu
TB0C	●	●	0--- -000	0--- -000	0--- -000	u--- -uuu
TB1C	●	●	0--- -000	0--- -000	0--- -000	u--- -uuu
STMC0	●	●	0000 0---	0000 0---	0000 0---	uuuu u---

Register	BH67F5265	BH67F5275	Power On Reset	LVR Reset (Normal Operation)	WDT Time-out (Normal Operation)	WDT Time-out (IDLE/SLEEP)
STMC1	●	●	0000 0000	0000 0000	0000 0000	uuuu uuuu
STMDL	●	●	0000 0000	0000 0000	0000 0000	uuuu uuuu
STMDH	●	●	0000 0000	0000 0000	0000 0000	uuuu uuuu
STMAL	●	●	0000 0000	0000 0000	0000 0000	uuuu uuuu
STMAH	●	●	0000 0000	0000 0000	0000 0000	uuuu uuuu
STMRP	●	●	0000 0000	0000 0000	0000 0000	uuuu uuuu
PTM0C0	●	●	0000 0---	0000 0---	0000 0---	uuuu u---
PTM0C1	●	●	0000 0000	0000 0000	0000 0000	uuuu uuuu
PTM0DL	●	●	0000 0000	0000 0000	0000 0000	uuuu uuuu
PTM0DH	●	●	---- --00	---- --00	---- --00	---- --uu
PTM0AL	●	●	0000 0000	0000 0000	0000 0000	uuuu uuuu
PTM0AH	●	●	---- --00	---- --00	---- --00	---- --uu
PTM0RPL	●	●	0000 0000	0000 0000	0000 0000	uuuu uuuu
PTM0RPH	●	●	---- --00	---- --00	---- --00	---- --uu
TLVRC	●	●	---- --01	---- --01	---- --01	---- --uu
MDUWR0	●	●	xxxx xxxx	0000 0000	0000 0000	uuuu uuuu
MDUWR1	●	●	xxxx xxxx	0000 0000	0000 0000	uuuu uuuu
MDUWR2	●	●	xxxx xxxx	0000 0000	0000 0000	uuuu uuuu
MDUWR3	●	●	xxxx xxxx	0000 0000	0000 0000	uuuu uuuu
MDUWR4	●	●	xxxx xxxx	0000 0000	0000 0000	uuuu uuuu
MDUWR5	●	●	xxxx xxxx	0000 0000	0000 0000	uuuu uuuu
MDUWCTRL	●	●	00-- ----	00-- ----	00-- ----	uu-- ----
PWRC	●	●	00-- 0000	00-- 0000	00-- 0000	uu-- uuuu
PGAC0	●	●	0000 0000	0000 0000	0000 0000	uuuu uuuu
PGAC1	●	●	000- ----	000- ----	000- ----	uuu- ----
PGACS	●	●	0000 0000	0000 0000	0000 0000	uuuu uuuu
ADRL	●	●	xxxx xxxx	xxxx xxxx	xxxx xxxx	uuuu uuuu
ADRM	●	●	xxxx xxxx	xxxx xxxx	xxxx xxxx	uuuu uuuu
ADRH	●	●	xxxx xxxx	xxxx xxxx	xxxx xxxx	uuuu uuuu
ADCR0	●	●	0000 0000	0000 0000	0000 0000	uuuu uuuu
ADCR1	●	●	--00 00--	--00 00--	--00 00--	--uu uu--
ADCS	●	●	---0 0000	---0 0000	---0 0000	---u uuuu
VBOPC	●	●	0--- 1010	0--- 1010	0--- 1010	u--- uuuu
LNOPC	●	●	0--- -000	0--- -000	0--- -000	u--- -uuu
DSDACC	●	●	00-- ----	00-- ----	00-- ----	uu-- ----
DSDAH	●	●	0000 0000	0000 0000	0000 0000	uuuu uuuu
DSDAL	●	●	---- 0000	---- 0000	---- 0000	---- uuuu
PD	●	●	1111 1111	1111 1111	1111 1111	uuuu uuuu
PDC	●	●	1111 1111	1111 1111	1111 1111	uuuu uuuu
PDPU	●	●	0000 0000	0000 0000	0000 0000	uuuu uuuu
LCDC0	●	●	0000 -000	0000 -000	0000 -000	uuuu -uuu
LCDCP	●	●	---- 0-00	---- 0-00	---- 0-00	---- u-uu
LCDC2	●	●	000- -000	000- -000	000- -000	uuu- -uuu
PF	●		---- -111	---- -111	---- -111	---- -uuu
		●	1111 1111	1111 1111	1111 1111	uuuu uuuu

Register	BH67F5265	BH67F5275	Power On Reset	LVR Reset (Normal Operation)	WDT Time-out (Normal Operation)	WDT Time-out (IDLE/SLEEP)
PFC	●		---- -111	---- -111	---- -111	---- -uuu
		●	1111 1111	1111 1111	1111 1111	uuuu uuuu
PFPU	●		---- -000	---- -000	---- -000	---- -uuu
		●	0000 0000	0000 0000	0000 0000	uuuu uuuu
PMPS	●	●	--00 0000	--00 0000	--00 0000	--uu uuuu
STKPTR	●	●	0--- 0000	0--- 0000	0--- 0000	u--- 0000
PTM1C0	●	●	0000 0---	0000 0---	0000 0---	uuuu u---
PTM1C1	●	●	0000 0000	0000 0000	0000 0000	uuuu uuuu
PTM1DL	●	●	0000 0000	0000 0000	0000 0000	uuuu uuuu
PTM1DH	●	●	---- --00	---- --00	---- --00	---- --uu
PTM1AL	●	●	0000 0000	0000 0000	0000 0000	uuuu uuuu
PTM1AH	●	●	---- --00	---- --00	---- --00	---- --uu
PTM1RPL	●	●	0000 0000	0000 0000	0000 0000	uuuu uuuu
PTM1RPH	●	●	---- --00	---- --00	---- --00	---- --uu
PTM2C0	●	●	0000 0---	0000 0---	0000 0---	uuuu u---
PTM2C1	●	●	0000 0000	0000 0000	0000 0000	uuuu uuuu
PTM2DL	●	●	0000 0000	0000 0000	0000 0000	uuuu uuuu
PTM2DH	●	●	---- --00	---- --00	---- --00	---- --uu
PTM2AL	●	●	0000 0000	0000 0000	0000 0000	uuuu uuuu
PTM2AH	●	●	---- --00	---- --00	---- --00	---- --uu
PTM2RPL	●	●	0000 0000	0000 0000	0000 0000	uuuu uuuu
PTM2RPH	●	●	---- --00	---- --00	---- --00	---- --uu
ATMC0		●	0000 0--0	0000 0--0	0000 0--0	uuuu u--u
ATMC1		●	0000 0000	0000 0000	0000 0000	uuuu uuuu
ATMDL		●	0000 0000	0000 0000	0000 0000	uuuu uuuu
ATMDH		●	---- --00	---- --00	---- --00	---- --uu
ATMAL		●	0000 0000	0000 0000	0000 0000	uuuu uuuu
ATMAH		●	---- --00	---- --00	---- --00	---- --uu
ATMBL		●	0000 0000	0000 0000	0000 0000	uuuu uuuu
ATMBH		●	---- --00	---- --00	---- --00	---- --uu
ATMRP		●	0000 0000	0000 0000	0000 0000	uuuu uuuu
IECC	●	●	0000 0000	0000 0000	0000 0000	uuuu uuuu
EEC	●	●	0000 0000	0000 0000	0000 0000	uuuu uuuu
FC0	●	●	0000 0000	0000 0000	0000 0000	uuuu uuuu
FC1	●	●	0000 0000	0000 0000	0000 0000	uuuu uuuu
FC2	●	●	---- --00	---- --00	---- --00	---- --uu
FARL	●	●	0000 0000	0000 0000	0000 0000	uuuu uuuu
FARH	●		--00 0000	--00 0000	--00 0000	--uu uuuu
		●	-000 0000	-000 0000	-000 0000	-uuu uuuu
FD0L	●	●	0000 0000	0000 0000	0000 0000	uuuu uuuu
FD0H	●	●	0000 0000	0000 0000	0000 0000	uuuu uuuu
FD1L	●	●	0000 0000	0000 0000	0000 0000	uuuu uuuu
FD1H	●	●	0000 0000	0000 0000	0000 0000	uuuu uuuu
FD2L	●	●	0000 0000	0000 0000	0000 0000	uuuu uuuu
FD2H	●	●	0000 0000	0000 0000	0000 0000	uuuu uuuu

Register	BH67F5265	BH67F5275	Power On Reset	LVR Reset (Normal Operation)	WDT Time-out (Normal Operation)	WDT Time-out (IDLE/SLEEP)
FD3L	●	●	0000 0000	0000 0000	0000 0000	uuuu uuuu
FD3H	●	●	0000 0000	0000 0000	0000 0000	uuuu uuuu
IFS0	●	●	00-- 0--0	00-- 0--0	00-- 0--0	uu-- u--u
IFS1	●	●	-000 --00	-000 --00	-000 --00	-uuu --uu
PAS0	●	●	0000 0000	0000 0000	0000 0000	uuuu uuuu
PAS1	●	●	0000 0000	0000 0000	0000 0000	uuuu uuuu
PBS0	●	●	0000 00--	0000 00--	0000 00--	uuuu uu--
PBS1	●	●	0000 0000	0000 0000	0000 0000	uuuu uuuu
PCS0	●	●	0000 0000	0000 0000	0000 0000	uuuu uuuu
PCS1	●	●	0000 0000	0000 0000	0000 0000	uuuu uuuu
SLEDC0	●	●	0000 0000	0000 0000	0000 0000	uuuu uuuu
SLEDC1	●	●	0000 0000	0000 0000	0000 0000	uuuu uuuu
SLEDC2	●		--00 0000	--00 0000	--00 0000	--uu uuuu
		●	0000 0000	0000 0000	0000 0000	uuuu uuuu
PDS0	●	●	0000 0000	0000 0000	0000 0000	uuuu uuuu
PDS1	●	●	0000 0000	0000 0000	0000 0000	uuuu uuuu
PES0	●	●	0000 0000	0000 0000	0000 0000	uuuu uuuu
PES1	●	●	0000 0000	0000 0000	0000 0000	uuuu uuuu
PFS0	●		--00 0000	--00 0000	--00 0000	--uu uuuu
		●	0000 0000	0000 0000	0000 0000	uuuu uuuu
PFS1		●	0000 0000	0000 0000	0000 0000	uuuu uuuu
PGS0		●	0000 0000	0000 0000	0000 0000	uuuu uuuu
PGS1		●	0000 0000	0000 0000	0000 0000	uuuu uuuu
PHS0		●	---- --00	---- --00	---- --00	---- --uu
SLEDC3		●	--00 0000	--00 0000	--00 0000	--uu uuuu
PH		●	---- ---1	---- ---1	---- ---1	---- ---u
PHC		●	---- ---1	---- ---1	---- ---1	---- ---u
PHPU		●	---- ---0	---- ---0	---- ---0	---- ---u
PCRL	●	●	0000 0000	0000 0000	0000 0000	uuuu uuuu
PCRH	●		--00 0000	--00 0000	--00 0000	--uu uuuu
		●	-000 0000	-000 0000	-000 0000	-uuu uuuu
CRCCR	●	●	---- ---0	---- ---0	---- ---0	---- ---u
CRCIN	●	●	0000 0000	0000 0000	0000 0000	uuuu uuuu
CRCDL	●	●	0000 0000	0000 0000	0000 0000	uuuu uuuu
CRCDH	●	●	0000 0000	0000 0000	0000 0000	uuuu uuuu

Note: “u” stands for unchanged
“x” stands for unknown
“-” stands for unimplemented

Input/Output Ports

Holtek microcontrollers offer considerable flexibility on their I/O ports. With the input or output designation of every pin fully under user program control, pull-high selections for all ports and wake-up selections on certain pins, the user is provided with an I/O structure to meet the needs of a wide range of application possibilities.

The devices provide bidirectional input/output lines labeled with port names PA~PH. These I/O ports are mapped to the RAM Data Memory with specific addresses as shown in the Special Purpose Data Memory table. The I/O port can be used for input and output operations. For input operation, the port is non-latching, which means the inputs must be ready at the T2 rising edge of instruction "MOV A, [m]", where m denotes the port address. For output operation, all the data is latched and remains unchanged until the output latch is rewritten.

Register Name	Bit							
	7	6	5	4	3	2	1	0
PA	PA7	PA6	PA5	PA4	PA3	PA2	PA1	PA0
PAC	PAC7	PAC6	PAC5	PAC4	PAC3	PAC2	PAC1	PAC0
PAPU	PAPU7	PAPU6	PAPU5	PAPU4	PAPU3	PAPU2	PAPU1	PAPU0
PAWU	PAWU7	PAWU6	PAWU5	PAWU4	PAWU3	PAWU2	PAWU1	PAWU0
PB	PB7	PB6	PB5	PB4	PB3	PB2	PB1	PB0
PBC	PBC7	PBC6	PBC5	PBC4	PBC3	PBC2	PBC1	PBC0
PBPU	PBPU7	PBPU6	PBPU5	PBPU4	PBPU3	PBPU2	PBPU1	PBPU0
PC	PC7	PC6	PC5	PC4	PC3	PC2	PC1	PC0
PCC	PCC7	PCC6	PCC5	PCC4	PCC3	PCC2	PCC1	PCC0
PCPU	PCPU7	PCPU6	PCPU5	PCPU4	PCPU3	PCPU2	PCPU1	PCPU0
PD	PD7	PD6	PD5	PD4	PD3	PD2	PD1	PD0
PDC	PDC7	PDC6	PDC5	PDC4	PDC3	PDC2	PDC1	PDC0
PDPU	PDPU7	PDPU6	PDPU5	PDPU4	PDPU3	PDPU2	PDPU1	PDPU0
PE	PE7	PE6	PE5	PE4	PE3	PE2	PE1	PE0
PEC	PEC7	PEC6	PEC5	PEC4	PEC3	PEC2	PEC1	PEC0
PEPU	PEPU7	PEPU6	PEPU5	PEPU4	PEPU3	PEPU2	PEPU1	PEPU0
PF	—	—	—	—	—	PF2	PF1	PF0
PFC	—	—	—	—	—	PFC2	PFC1	PFC0
PFPU	—	—	—	—	—	PFPU2	PFPU1	PFPU0

"—": Unimplemented, read as "0"

I/O Logic Function Register List – BH67F5265

Register Name	Bit							
	7	6	5	4	3	2	1	0
PA	PA7	PA6	PA5	PA4	PA3	PA2	PA1	PA0
PAC	PAC7	PAC6	PAC5	PAC4	PAC3	PAC2	PAC1	PAC0
PAPU	PAPU7	PAPU6	PAPU5	PAPU4	PAPU3	PAPU2	PAPU1	PAPU0
PAWU	PAWU7	PAWU6	PAWU5	PAWU4	PAWU3	PAWU2	PAWU1	PAWU0
PB	PB7	PB6	PB5	PB4	PB3	PB2	PB1	PB0
PBC	PBC7	PBC6	PBC5	PBC4	PBC3	PBC2	PBC1	PBC0
PBPU	PBPU7	PBPU6	PBPU5	PBPU4	PBPU3	PBPU2	PBPU1	PBPU0
PC	PC7	PC6	PC5	PC4	PC3	PC2	PC1	PC0
PCC	PCC7	PCC6	PCC5	PCC4	PCC3	PCC2	PCC1	PCC0
PCPU	PCPU7	PCPU6	PCPU5	PCPU4	PCPU3	PCPU2	PCPU1	PCPU0
PD	PD7	PD6	PD5	PD4	PD3	PD2	PD1	PD0
PDC	PDC7	PDC6	PDC5	PDC4	PDC3	PDC2	PDC1	PDC0

Register Name	Bit							
	7	6	5	4	3	2	1	0
PDPU	PDPU7	PDPU6	PDPU5	PDPU4	PDPU3	PDPU2	PDPU1	PDPU0
PE	PE7	PE6	PE5	PE4	PE3	PE2	PE1	PE0
PEC	PEC7	PEC6	PEC5	PEC4	PEC3	PEC2	PEC1	PEC0
PEPU	PEPU7	PEPU6	PEPU5	PEPU4	PEPU3	PEPU2	PEPU1	PEPU0
PF	PF7	PF6	PF5	PF4	PF3	PF2	PF1	PF0
PFC	PFC7	PFC6	PFC5	PFC4	PFC3	PFC2	PFC1	PFC0
PFPU	PFPU7	PFPU6	PFPU5	PFPU4	PFPU3	PFPU2	PFPU1	PFPU0
PG	PG7	PG6	PG5	PG4	PG3	PG2	PG1	PG0
PGC	PGC7	PGC6	PGC5	PGC4	PGC3	PGC2	PGC1	PGC0
PGPU	PGPU7	PGPU6	PGPU5	PGPU4	PGPU3	PGPU2	PGPU1	PGPU0
PH	—	—	—	—	—	—	—	PH0
PHC	—	—	—	—	—	—	—	PHC0
PHPU	—	—	—	—	—	—	—	PHPU0

"—": Unimplemented, read as "0"

I/O Logic Function Register List – BH67F5275

Pull-high Resistors

Many product applications require pull-high resistors for their switch inputs usually requiring the use of an external resistor. To eliminate the need for these external resistors, all I/O pins, when configured as a digital input have the capability of being connected to an internal pull-high resistor. These pull-high resistors are selected using the PAPU~PHPU registers, and are implemented using weak PMOS transistors.

Note that the pull-high resistor can be controlled by the relevant pull-high control register only when the pin-shared functional pin is selected as a digital input or NMOS output. Otherwise, the pull-high resistors cannot be enabled.

- **PxPU Register**

Bit	7	6	5	4	3	2	1	0
Name	PxPU7	PxPU6	PxPU5	PxPU4	PxPU3	PxPU2	PxPU1	PxPU0
R/W	R/W	R/W	R/W	R/W	R/W	R/W	R/W	R/W
POR	0	0	0	0	0	0	0	0

PxPUn: I/O Port x Pin pull-high function control
0: Disable
1: Enable

The PxPUn bit is used to control the pin pull-high function. Here the "x" is the Port name which can be A, B, C, D, E or F for the BH67F5265 and A, B, C, D, E, F, G or H for the BH67F5275. However, the actual available bits for each I/O Port may be different.

Port A Wake-up

The HALT instruction forces the microcontroller into the SLEEP or IDLE Mode which preserves power, a feature that is important for battery and other low-power applications. Various methods exist to wake-up the microcontroller, one of which is to change the logic condition on one of the Port A pins from high to low. This function is especially suitable for applications that can be woken up via external switches. Each pin on Port A can be selected individually to have this wake-up feature using the PAWU register.

Note that the wake-up function can be controlled by the wake-up control registers only when the pin is selected as a general purpose input and the MCU enters the IDLE or SLEEP mode.

- **PAWU Register**

Bit	7	6	5	4	3	2	1	0
Name	PAWU7	PAWU6	PAWU5	PAWU4	PAWU3	PAWU2	PAWU1	PAWU0
R/W	R/W	R/W	R/W	R/W	R/W	R/W	R/W	R/W
POR	0	0	0	0	0	0	0	0

Bit 7~0 **PAWU7~PAWU0**: PA7~PA0 wake-up function control
0: Disable
1: Enable

I/O Port Control Register

Each I/O Port has its own control register known as PAC~PHC, to control the input/output configuration. With this control register, each CMOS output or input can be reconfigured dynamically under software control. Each pin of the I/O ports is directly mapped to a bit in its associated port control register. For the I/O pin to function as an input, the corresponding bit of the control register must be written as a “1”. This will then allow the logic state of the input pin to be directly read by instructions. When the corresponding bit of the control register is written as a “0”, the I/O pin will be setup as a CMOS output. If the pin is currently setup as an output, instructions can still be used to read the output register. However, it should be noted that the program will in fact only read the status of the output data latch and not the actual logic status of the output pin when the IECM is cleared to “0”.

- **PxC Register**

Bit	7	6	5	4	3	2	1	0
Name	PxC7	PxC6	PxC5	PxC4	PxC3	PxC2	PxC1	PxC0
R/W	R/W	R/W	R/W	R/W	R/W	R/W	R/W	R/W
POR	1	1	1	1	1	1	1	1

PxCn: I/O Port x Pin type selection
0: Output
1: Input

The PxCn bit is used to control the pin type selection. Here the “x” is the Port name which can be A, B, C, D, E or F for the BH67F5265 and A, B, C, D, E, F, G or H for the BH67F5275. However, the actual available bits for each I/O Port may be different.

I/O Port Source Current Control

The devices support different output source current driving capability for each I/O port. With the selection registers, SLEDC0~SLEDC3, specific I/O port can support four levels of the source current driving capability. These source current selection bits are available when the corresponding pin is configured as a CMOS output. Otherwise, these select bits have no effect. Users should refer to the Input/Output Characteristics section to select the desired output source current for different applications.

Register Name	Bit							
	7	6	5	4	3	2	1	0
SLEDC0	SLEDC07	SLEDC06	SLEDC05	SLEDC04	SLEDC03	SLEDC02	SLEDC01	SLEDC00
SLEDC1	SLEDC17	SLEDC16	SLEDC15	SLEDC14	SLEDC13	SLEDC12	SLEDC11	SLEDC10
SLEDC2	—	—	SLEDC25	SLEDC24	SLEDC23	SLEDC22	SLEDC21	SLEDC20

I/O Port Source Current Control Register List – BH67F5265

Register Name	Bit							
	7	6	5	4	3	2	1	0
SLEDC0	SLEDC07	SLEDC06	SLEDC05	SLEDC04	SLEDC03	SLEDC02	SLEDC01	SLEDC00
SLEDC1	SLEDC17	SLEDC16	SLEDC15	SLEDC14	SLEDC13	SLEDC12	SLEDC11	SLEDC10
SLEDC2	SLEDC27	SLEDC26	SLEDC25	SLEDC24	SLEDC23	SLEDC22	SLEDC21	SLEDC20
SLEDC3	—	—	SLEDC35	SLEDC34	SLEDC33	SLEDC32	SLEDC31	SLEDC30

I/O Port Source Current Control Register List – BH67F5275

• SLEDC0 Register

Bit	7	6	5	4	3	2	1	0
Name	SLEDC07	SLEDC06	SLEDC05	SLEDC04	SLEDC03	SLEDC02	SLEDC01	SLEDC00
R/W	R/W	R/W	R/W	R/W	R/W	R/W	R/W	R/W
POR	0	0	0	0	0	0	0	0

Bit 7~6 **SLEDC07~SLEDC06**: PB7~PB4 source current selection
00: Source current = Level 0 (min.)
01: Source current = Level 1
10: Source current = Level 2
11: Source current = Level 3 (max.)

Bit 5~4 **SLEDC05~SLEDC04**: PB3~PB0 source current selection
00: Source current = Level 0 (min.)
01: Source current = Level 1
10: Source current = Level 2
11: Source current = Level 3 (max.)

Note: For PB2~PB3, refer to the Input/Output (with Multi-power) D.C. Characteristics section to obtain the exact value. While for PB0~PB1, refer to the Input/Output (without Multi-power) D.C. Characteristics section to obtain the exact value.

Bit 3~2 **SLEDC03~SLEDC02**: PA7~PA4 source current selection
00: Source current = Level 0 (min.)
01: Source current = Level 1
10: Source current = Level 2
11: Source current = Level 3 (max.)

Note: For PA6~PA7, refer to the Input/Output (with Multi-power) D.C. Characteristics section to obtain the exact value. While for PA4~PA5, refer to the Input/Output (without Multi-power) D.C. Characteristics section to obtain the exact value.

Bit 1~0 **SLEDC01~SLEDC00**: PA3~PA0 source current selection
00: Source current = Level 0 (min.)
01: Source current = Level 1
10: Source current = Level 2
11: Source current = Level 3 (max.)

• **SLEDC1 Register**

Bit	7	6	5	4	3	2	1	0
Name	SLEDC17	SLEDC16	SLEDC15	SLEDC14	SLEDC13	SLEDC12	SLEDC11	SLEDC10
R/W	R/W	R/W	R/W	R/W	R/W	R/W	R/W	R/W
POR	0	0	0	0	0	0	0	0

Bit 7~6 **SLEDC17~SLEDC16**: PD7~PD4 source current selection
00: Source current = Level 0 (min.)
01: Source current = Level 1
10: Source current = Level 2
11: Source current = Level 3 (max.)

Bit 5~4 **SLEDC15~SLEDC14**: PD3~PD0 source current selection
00: Source current = Level 0 (min.)
01: Source current = Level 1
10: Source current = Level 2
11: Source current = Level 3 (max.)

Bit 3~2 **SLEDC13~SLEDC12**: PC7~PC4 source current selection
00: Source current = Level 0 (min.)
01: Source current = Level 1
10: Source current = Level 2
11: Source current = Level 3 (max.)

Note: For PC4~PC5, refer to the Input/Output (with Multi-power) D.C. Characteristics section to obtain the exact value. While for PC6~PC7, refer to the Input/Output (without Multi-power) D.C. Characteristics section to obtain the exact value.

Bit 1~0 **SLEDC11~SLEDC10**: PC3~PC0 source current selection
00: Source current = Level 0 (min.)
01: Source current = Level 1
10: Source current = Level 2
11: Source current = Level 3 (max.)

• **SLEDC2 Register – BH67F5265**

Bit	7	6	5	4	3	2	1	0
Name	—	—	SLEDC25	SLEDC24	SLEDC23	SLEDC22	SLEDC21	SLEDC20
R/W	—	—	R/W	R/W	R/W	R/W	R/W	R/W
POR	—	—	0	0	0	0	0	0

Bit 7~6 Unimplemented, read as “0”

Bit 5~4 **SLEDC25~SLEDC24**: PF2~PF0 source current selection
00: Source current = Level 0 (min.)
01: Source current = Level 1
10: Source current = Level 2
11: Source current = Level 3 (max.)

Bit 3~2 **SLEDC23~SLEDC22**: PE7~PE4 source current selection
00: Source current = Level 0 (min.)
01: Source current = Level 1
10: Source current = Level 2
11: Source current = Level 3 (max.)

Bit 1~0 **SLEDC21~SLEDC20**: PE3~PE0 source current selection
00: Source current = Level 0 (min.)
01: Source current = Level 1
10: Source current = Level 2
11: Source current = Level 3 (max.)

• **SLEDC2 Register – BH67F5275**

Bit	7	6	5	4	3	2	1	0
Name	SLEDC27	SLEDC26	SLEDC25	SLEDC24	SLEDC23	SLEDC22	SLEDC21	SLEDC20
R/W	R/W	R/W	R/W	R/W	R/W	R/W	R/W	R/W
POR	0	0	0	0	0	0	0	0

Bit 7~6 **SLEDC27~SLEDC26**: PF7~PF4 source current selection
00: Source current = Level 0 (min.)
01: Source current = Level 1
10: Source current = Level 2
11: Source current = Level 3 (max.)

Bit 5~4 **SLEDC25~SLEDC24**: PF3~PF0 source current selection
00: Source current = Level 0 (min.)
01: Source current = Level 1
10: Source current = Level 2
11: Source current = Level 3 (max.)

Bit 3~2 **SLEDC23~SLEDC22**: PE7~PE4 source current selection
00: Source current = Level 0 (min.)
01: Source current = Level 1
10: Source current = Level 2
11: Source current = Level 3 (max.)

Bit 1~0 **SLEDC21~SLEDC20**: PE3~PE0 source current selection
00: Source current = Level 0 (min.)
01: Source current = Level 1
10: Source current = Level 2
11: Source current = Level 3 (max.)

• **SLEDC3 Register – BH67F5275**

Bit	7	6	5	4	3	2	1	0
Name	—	—	SLEDC35	SLEDC34	SLEDC33	SLEDC32	SLEDC31	SLEDC30
R/W	—	—	R/W	R/W	R/W	R/W	R/W	R/W
POR	—	—	0	0	0	0	0	0

Bit 7~6 Unimplemented, read as “0”

Bit 5~4 **SLEDC35~SLEDC34**: PH0 source current selection
00: Source current = Level 0 (min.)
01: Source current = Level 1
10: Source current = Level 2
11: Source current = Level 3 (max.)

Bit 3~2 **SLEDC33~SLEDC32**: PG7~PG4 source current selection
00: Source current = Level 0 (min.)
01: Source current = Level 1
10: Source current = Level 2
11: Source current = Level 3 (max.)

Bit 1~0 **SLEDC31~SLEDC30**: PG3~PG0 source current selection
00: Source current = Level 0 (min.)
01: Source current = Level 1
10: Source current = Level 2
11: Source current = Level 3 (max.)

I/O Port Power Source Control

These devices support different I/O port power source selections for PA6~PA7, PB2~PB3 and PC4~PC5. With the exception of $\overline{\text{RES}}$/OCDS, the multi-power function is only effective when the pin is set to have a digital input or output function.

The port power can come from either the power pin VDD or VDDIO, which is determined using the PMPS5~PMPS0 bits in the PMPS register. The VDDIO power pin function should first be selected using the corresponding pin-shared function selection bits if the port power is supposed to come from the VDDIO pin.

An important point to know is that the input power voltage on the VDDIO pin should be equal to or less than the device supply power voltage V_{DD} when the VDDIO pin is selected as the port power supply pin.

- **PMPS Register**

Bit	7	6	5	4	3	2	1	0
Name	—	—	PMPS5	PMPS4	PMPS3	PMPS2	PMPS1	PMPS0
R/W	—	—	R/W	R/W	R/W	R/W	R/W	R/W
POR	—	—	0	0	0	0	0	0

Bit 7~6 Unimplemented, read as "0"

Bit 5~4 **PMPS5~PMPS4**: PC4~PC5 pin power supply selection
0x: V_{DD}
1x: V_{DDIO}
If the PF0 pin is switched to the VDDIO function, and the PMPS5~PMPS4 bits are set to "1x", the VDDIO pin input voltage can be used for PC4~PC5 pin power.

Bit 3~2 **PMPS3~PMPS2**: PB2~PB3 pin power supply selection
0x: V_{DD}
1x: V_{DDIO}
If the PF0 pin is switched to the VDDIO function, and the PMPS3~PMPS2 bits are set to "1x", the VDDIO pin input voltage can be used for PB2~PB3 pin power.

Bit 1~0 **PMPS1~PMPS0**: PA6~PA7 pin power supply selection
0x: V_{DD}
1x: V_{DDIO}
If the PF0 pin is switched to the VDDIO function, and the PMPS1~PMPS0 bits are set to "1x", the VDDIO pin input voltage can be used for PA6~PA7 pin power.

Pin-shared Functions

The flexibility of the microcontroller range is greatly enhanced by the use of pins that have more than one function. Limited numbers of pins can force serious design constraints on designers but by supplying pins with multi-functions, many of these difficulties can be overcome. For these pins, the desired function of the multi-function I/O pins is selected by a series of registers via the application program control.

Pin-shared Function Selection Registers

The limited number of supplied pins in a package can impose restrictions on the amount of functions a certain device can contain. However by allowing the same pins to share several different functions and providing a means of function selection, a wide range of different functions can be incorporated into even relatively small package sizes. The devices include Port "x" output function Selection register "n", labeled as PxSn, and Input Function Selection register, labeled as IFSi, which can select the desired functions of the multi-function pin-shared pins.

The most important point to note is to make sure that the desired pin-shared function is properly selected and also deselected. For most pin-shared functions, to select the desired pin-shared function, the pin-shared function should first be correctly selected using the corresponding pin-shared control

register. After that the corresponding peripheral functional setting should be configured and then the peripheral function can be enabled. However, a special point must be noted for some digital input pins, such as INTn, xTCKn, xTPnI, etc., which share the same pin-shared control configuration with their corresponding general purpose I/O functions when setting the relevant pin-shared control bit fields. To select these pin functions, in addition to the necessary pin-shared control and peripheral functional setup aforementioned, they must also be setup as input by setting the corresponding bit in the I/O port control register. To correctly deselect the pin-shared function, the peripheral function should first be disabled and then the corresponding pin-shared function control register can be modified to select other pin-shared functions.

Register Name	Bit							
	7	6	5	4	3	2	1	0
PAS0	PAS07	PAS06	PAS05	PAS04	PAS03	PAS02	PAS01	PAS00
PAS1	PAS17	PAS16	PAS15	PAS14	PAS13	PAS12	PAS11	PAS10
PBS0	PBS07	PBS06	PBS05	PBS04	PBS03	PBS02	—	—
PBS1	PBS17	PBS16	PBS15	PBS14	PBS13	PBS12	PBS11	PBS10
PCS0	PCS07	PCS06	PCS05	PCS04	PCS03	PCS02	PCS01	PCS00
PCS1	PCS17	PCS16	PCS15	PCS14	PCS13	PCS12	PCS11	PCS10
PDS0	PDS07	PDS06	PDS05	PDS04	PDS03	PDS02	PDS01	PDS00
PDS1	PDS17	PDS16	PDS15	PDS14	PDS13	PDS12	PDS11	PDS10
PES0	PES07	PES06	PES05	PES04	PES03	PES02	PES01	PES00
PES1	PES17	PES16	PES15	PES14	PES13	PES12	PES11	PES10
PFS0	—	—	PFS05	PFS04	PFS03	PFS02	PFS01	PFS00
IFS0	PTP2IPS	PTP1IPS	—	—	PTCK2PS	—	—	STCKPS
IFS1	—	SPISCSBPS	SPISDIPS	SPISCKPS	—	—	SDISDAPS	RXPS

Pin-shared Function Selection Register List – BH67F5265

Register Name	Bit							
	7	6	5	4	3	2	1	0
PAS0	PAS07	PAS06	PAS05	PAS04	PAS03	PAS02	PAS01	PAS00
PAS1	PAS17	PAS16	PAS15	PAS14	PAS13	PAS12	PAS11	PAS10
PBS0	PBS07	PBS06	PBS05	PBS04	PBS03	PBS02	—	—
PBS1	PBS17	PBS16	PBS15	PBS14	PBS13	PBS12	PBS11	PBS10
PCS0	PCS07	PCS06	PCS05	PCS04	PCS03	PCS02	PCS01	PCS00
PCS1	PCS17	PCS16	PCS15	PCS14	PCS13	PCS12	PCS11	PCS10
PDS0	PDS07	PDS06	PDS05	PDS04	PDS03	PDS02	PDS01	PDS00
PDS1	PDS17	PDS16	PDS15	PDS14	PDS13	PDS12	PDS11	PDS10
PES0	PES07	PES06	PES05	PES04	PES03	PES02	PES01	PES00
PES1	PES17	PES16	PES15	PES14	PES13	PES12	PES11	PES10
PFS0	PFS07	PFS06	PFS05	PFS04	PFS03	PFS02	PFS01	PFS00
PFS1	PFS17	PFS16	PFS15	PFS14	PFS13	PFS12	PFS11	PFS10
PGS0	PGS07	PGS06	PGS05	PGS04	PGS03	PGS02	PGS01	PGS00
PGS1	PGS17	PGS16	PGS15	PGS14	PGS13	PGS12	PGS11	PGS10
PHS0	—	—	—	—	—	—	PHS01	PHS00
IFS0	PTP2IPS	PTP1IPS	—	—	PTCK2PS	—	—	STCKPS
IFS1	—	SPISCSBPS	SPISDIPS	SPISCKPS	—	—	SDISDAPS	RXPS

Pin-shared Function Selection Register List – BH67F5275

• **PAS0 Register**

Bit	7	6	5	4	3	2	1	0
Name	PAS07	PAS06	PAS05	PAS04	PAS03	PAS02	PAS01	PAS00
R/W	R/W	R/W	R/W	R/W	R/W	R/W	R/W	R/W
POR	0	0	0	0	0	0	0	0

Bit 7~6 **PAS07~PAS06**: PA3 pin-shared function selection
00: PA3/PTP1I
01: PTP1
10: SPISDO
11: OSC2

Bit 5~4 **PAS05~PAS04**: PA2 pin-shared function selection
00: PA2/PTCK0
01: PA2/PTCK0
10: PA2/PTCK0
11: XT2

Bit 3~2 **PAS03~PAS02**: PA1 pin-shared function selection
00: PA1/INT0/STCK
01: OPIN
10: LVDIN
11: PTP0B

Bit 1~0 **PAS01~PAS00**: PA0 pin-shared function selection
00: PA0/PTP0I
01: PA0/PTP0I
10: PTP0
11: XT1

• **PAS1 Register**

Bit	7	6	5	4	3	2	1	0
Name	PAS17	PAS16	PAS15	PAS14	PAS13	PAS12	PAS11	PAS10
R/W	R/W	R/W	R/W	R/W	R/W	R/W	R/W	R/W
POR	0	0	0	0	0	0	0	0

Bit 7~6 **PAS17~PAS16**: PA7 pin-shared function selection
00: PA7/PTCK2
01: SDI/SDA
10: RX/TX
11: PA7/PTCK2

Bit 5~4 **PAS15~PAS14**: PA6 pin-shared function selection
00: PA6/STCK
01: SPISDI
10: SCK/SCL
11: PA6/STCK

Bit 3~2 **PAS13~PAS12**: PA5 pin-shared function selection
00: PA5/STPI
01: STP
10: SPISCK
11: OPIP

Bit 1~0 **PAS11~PAS10**: PA4 pin-shared function selection
00: PA4/PTP2I
01: PTP2
10: $\overline{\text{SPISCS}}$
11: OSC1

• **PBS0 Register**

Bit	7	6	5	4	3	2	1	0
Name	PBS07	PBS06	PBS05	PBS04	PBS03	PBS02	—	—
R/W	R/W	R/W	R/W	R/W	R/W	R/W	—	—
POR	0	0	0	0	0	0	—	—

Bit 7~6 **PBS07~PBS06**: PB3 pin-shared function selection
00: PB3
01: SDO
10: SPISDI
11: TX

Bit 5~4 **PBS05~PBS04**: PB2 pin-shared function selection
00: PB2
01: $\overline{\text{SCS}}$
10: SPISCK
11: SEG24

Bit 3~2 **PBS03~PBS02**: PB1 pin-shared function selection
00: PB1/INT1
01: PB1/INT1
10: STPB
11: SEG22

Bit 1~0 Unimplemented, read as “0”

• **PBS1 Register**

Bit	7	6	5	4	3	2	1	0
Name	PBS17	PBS16	PBS15	PBS14	PBS13	PBS12	PBS11	PBS10
R/W	R/W	R/W	R/W	R/W	R/W	R/W	R/W	R/W
POR	0	0	0	0	0	0	0	0

Bit 7~6 **PBS17~PBS16**: PB7 pin-shared function selection
00: PB7
01: SEG12
10: PB7
11: PB7

Bit 5~4 **PBS15~PBS14**: PB6 pin-shared function selection
00: PB6
01: SEG13
10: PB6
11: PB6

Bit 3~2 **PBS13~PBS12**: PB5 pin-shared function selection
00: PB5
01: SEG14
10: PB5
11: PB5

Bit 1~0 **PBS11~PBS10**: PB4 pin-shared function selection
00: PB4
01: SEG15
10: PB4
11: PB4

• **PCS0 Register**

Bit	7	6	5	4	3	2	1	0
Name	PCS07	PCS06	PCS05	PCS04	PCS03	PCS02	PCS01	PCS00
R/W	R/W	R/W	R/W	R/W	R/W	R/W	R/W	R/W
POR	0	0	0	0	0	0	0	0

Bit 7~6 **PCS07~PCS06**: PC3 pin-shared function selection
00: PC3/PTCK2
01: SEG18
10: PC3/PTCK2
11: PC3/PTCK2

Bit 5~4 **PCS05~PCS04**: PC2 pin-shared function selection
00: PC2/PTP2I
01: PTP2
10: SEG19
11: PC2/PTP2I

Bit 3~2 **PCS03~PCS02**: PC1 pin-shared function selection
00: PC1/PTCK1
01: SEG20
10: PC1/PTCK1
11: PC1/PTCK1

Bit 1~0 **PCS01~PCS00**: PC0 pin-shared function selection
00: PC0/PTP1I
01: PC0/PTP1I
10: PTP1
11: SEG21

• **PCS1 Register**

Bit	7	6	5	4	3	2	1	0
Name	PCS17	PCS16	PCS15	PCS14	PCS13	PCS12	PCS11	PCS10
R/W	R/W	R/W	R/W	R/W	R/W	R/W	R/W	R/W
POR	0	0	0	0	0	0	0	0

Bit 7~6 **PCS17~PCS16**: PC7 pin-shared function selection
00: PC7
01: SEG16
10: PC7
11: PC7

Bit 5~4 **PCS15~PCS14**: PC6 pin-shared function selection
00: PC6
01: SEG17
10: PC6
11: PC6

Bit 3~2 **PCS13~PCS12**: PC5 pin-shared function selection
00: PC5
01: RX/TX
10: SDI/SDA
11: SPISDO

Bit 1~0 **PCS11~PCS10**: PC4 pin-shared function selection
00: PC4
01: SDO
10: TX
11: $\overline{\text{SPISCS}}$

• **PDS0 Register**

Bit	7	6	5	4	3	2	1	0
Name	PDS07	PDS06	PDS05	PDS04	PDS03	PDS02	PDS01	PDS00
R/W	R/W	R/W	R/W	R/W	R/W	R/W	R/W	R/W
POR	0	0	0	0	0	0	0	0

Bit 7~6 **PDS07~PDS06**: PD3 pin-shared function selection
00: PD3
01: SEG3
10: COM7
11: PD3

Bit 5~4 **PDS05~PDS04**: PD2 pin-shared function selection
00: PD2
01: SEG2
10: COM6
11: PD2

Bit 3~2 **PDS03~PDS02**: PD1 pin-shared function selection
00: PD1
01: SEG1
10: COM5
11: PD1

Bit 1~0 **PDS01~PDS00**: PD0 pin-shared function selection
00: PD0
01: SEG0
10: COM4
11: PD0

• **PDS1 Register**

Bit	7	6	5	4	3	2	1	0
Name	PDS17	PDS16	PDS15	PDS14	PDS13	PDS12	PDS11	PDS10
R/W	R/W	R/W	R/W	R/W	R/W	R/W	R/W	R/W
POR	0	0	0	0	0	0	0	0

Bit 7~6 **PDS17~PDS16**: PD7 pin-shared function selection
00: PD7
01: SEG28
10: PD7
11: PD7

Bit 5~4 **PDS15~PDS14**: PD6 pin-shared function selection
00: PD6
01: SEG27
10: V2
11: PD6

When the RCT bit is set to 1, the V2 pin function will be enabled, regardless of the PDS1[5:4] bit value. Therefore special attention should be made when setting, to avoid the interference between the selected I/O or other pin-shared functions and V2 function.

Bit 3~2 **PDS13~PDS12**: PD5 pin-shared function selection
00: PD5
01: SEG26
10: C2
11: PD5

When the RCT bit is set to 1, the C2 pin function will be enabled, regardless of the PDS1[3:2] bit value. Therefore special attention should be made when setting, to avoid the interference between the selected I/O or other pin-shared functions and C2 function.

Bit 1~0 **PDS11~PDS10**: PD4 pin-shared function selection
00: PD4
01: SEG25
10: C1
11: PD4

When the RCT bit is set to 1, the C1 pin function will be enabled, regardless of the PDS1[1:0] bit value. Therefore special attention should be made when setting, to avoid the interference between the selected I/O or other pin-shared functions and C1 function.

• PES0 Register – BH67F5265

Bit	7	6	5	4	3	2	1	0
Name	PES07	PES06	PES05	PES04	PES03	PES02	PES01	PES00
R/W	R/W	R/W	R/W	R/W	R/W	R/W	R/W	R/W
POR	0	0	0	0	0	0	0	0

Bit 7~6 **PES07~PES06**: PE3 pin-shared function selection
00: PE3
01: SEG8
10: PE3
11: PE3

Bit 5~4 **PES05~PES04**: PE2 pin-shared function selection
00: PE2
01: SEG9
10: PE2
11: PE2

Bit 3~2 **PES03~PES02**: PE1 pin-shared function selection
00: PE1
01: SEG10
10: PE1
11: PE1

Bit 1~0 **PES01~PES00**: PE0 pin-shared function selection
00: PE0
01: SEG11
10: PE0
11: PE0

• PES0 Register – BH67F5275

Bit	7	6	5	4	3	2	1	0
Name	PES07	PES06	PES05	PES04	PES03	PES02	PES01	PES00
R/W	R/W	R/W	R/W	R/W	R/W	R/W	R/W	R/W
POR	0	0	0	0	0	0	0	0

Bit 7~6 **PES07~PES06**: PE3 pin-shared function selection
00: PE3
01: SEG8
10: PE3
11: ATP/ATP_PWM1

Bit 5~4 **PES05~PES04**: PE2 pin-shared function selection
00: PE2
01: SEG9
10: PE2
11: ATPB/ATP_PWM2

Bit 3~2 **PES03~PES02**: PE1 pin-shared function selection
00: PE1
01: SEG10
10: PE1
11: ATP/ATP_PWM1

Bit 1~0 **PES01~PES00**: PE0 pin-shared function selection
00: PE0/ATCK
01: SEG11
10: PE0/ATCK
11: PE0/ATCK

• **PES1 Register**

Bit	7	6	5	4	3	2	1	0
Name	PES17	PES16	PES15	PES14	PES13	PES12	PES11	PES10
R/W	R/W	R/W	R/W	R/W	R/W	R/W	R/W	R/W
POR	0	0	0	0	0	0	0	0

Bit 7~6 **PES17~PES16**: PE7 pin-shared function selection
00: PE7
01: SEG4
10: PE7
11: PE7

Bit 5~4 **PES15~PES14**: PE6 pin-shared function selection
00: PE6
01: SEG5
10: PE6
11: PE6

Bit 3~2 **PES13~PES12**: PE5 pin-shared function selection
00: PE5
01: SEG6
10: PE5
11: PE5

Bit 1~0 **PES11~PES10**: PE4 pin-shared function selection
00: PE4
01: SEG7
10: PE4
11: PE4 (BH67F5265); ATPB/ATP_PWM2 (BH67F5275)

• **PFS0 Register – BH67F5265**

Bit	7	6	5	4	3	2	1	0
Name	—	—	PFS05	PFS04	PFS03	PFS02	PFS01	PFS00
R/W	—	—	R/W	R/W	R/W	R/W	R/W	R/W
POR	—	—	0	0	0	0	0	0

Bit 7~6 Unimplemented, read as “0”

Bit 5~4 **PFS05~PFS04**: PF2 pin-shared function selection
00: PF2
01: SEG29
10: PF2
11: PF2

Bit 3~2 **PFS03~PFS02**: PF1 pin-shared function selection
00: PF1
01: SEG23
10: PF1
11: PF1

Bit 1~0 **PFS01~PFS00**: PF0 pin-shared function selection
00: PF0
01: VDDIO
10: PF0
11: PF0

• **PFS0 Register – BH67F5275**

Bit	7	6	5	4	3	2	1	0
Name	PFS07	PFS06	PFS05	PFS04	PFS03	PFS02	PFS01	PFS00
R/W	R/W	R/W	R/W	R/W	R/W	R/W	R/W	R/W
POR	0	0	0	0	0	0	0	0

Bit 7~6 **PFS07~PFS06**: PF3 pin-shared function selection
00: PF3
01: SEG30
10: PF3
11: PF3

Bit 5~4 **PFS05~PFS04**: PF2 pin-shared function selection
00: PF2
01: SEG29
10: PF2
11: PF2

Bit 3~2 **PFS03~PFS02**: PF1 pin-shared function selection
00: PF1
01: SEG23
10: PF1
11: PF1

Bit 1~0 **PFS01~PFS00**: PF0 pin-shared function selection
00: PF0
01: VDDIO
10: PF0
11: PF0

• **PFS1 Register – BH67F5275**

Bit	7	6	5	4	3	2	1	0
Name	PFS17	PFS16	PFS15	PFS14	PFS13	PFS12	PFS11	PFS10
R/W	R/W	R/W	R/W	R/W	R/W	R/W	R/W	R/W
POR	0	0	0	0	0	0	0	0

Bit 7~6 **PFS17~PFS16**: PF7 pin-shared function selection
00: PF7
01: SEG34
10: PF7
11: PF7

Bit 5~4 **PFS15~PFS14**: PF6 pin-shared function selection
00: PF6
01: SEG33
10: PF6
11: PF6

Bit 3~2 **PFS13~PFS12**: PF5 pin-shared function selection
00: PF5
01: SEG32
10: PF5
11: PF5

Bit 1~0 **PFS11~PFS10**: PF4 pin-shared function selection
00: PF4
01: SEG31
10: PF4
11: PF4

• **PGS0 Register – BH67F5275**

Bit	7	6	5	4	3	2	1	0
Name	PGS07	PGS06	PGS05	PGS04	PGS03	PGS02	PGS01	PGS00
R/W	R/W	R/W	R/W	R/W	R/W	R/W	R/W	R/W
POR	0	0	0	0	0	0	0	0

Bit 7~6 **PGS07~PGS06**: PG3 pin-shared function selection
00: PG3
01: SEG38
10: PG3
11: PG3

Bit 5~4 **PGS05~PGS04**: PG2 pin-shared function selection
00: PG2
01: SEG37
10: PG2
11: PG2

Bit 3~2 **PGS03~PGS02**: PG1 pin-shared function selection
00: PG1
01: SEG36
10: PG1
11: PG1

Bit 1~0 **PGS01~PGS00**: PG0 pin-shared function selection
00: PG0
01: SEG35
10: PG0
11: PG0

• **PGS1 Register – BH67F5275**

Bit	7	6	5	4	3	2	1	0
Name	PGS17	PGS16	PGS15	PGS14	PGS13	PGS12	PGS11	PGS10
R/W	R/W	R/W	R/W	R/W	R/W	R/W	R/W	R/W
POR	0	0	0	0	0	0	0	0

Bit 7~6 **PGS17~PGS16**: PG7 pin-shared function selection
00: PG7
01: SEG42
10: PG7
11: PG7

Bit 5~4 **PGS15~PGS14**: PG6 pin-shared function selection
00: PG6
01: SEG41
10: PG6
11: PG6

Bit 3~2 **PGS13~PGS12**: PG5 pin-shared function selection
00: PG5
01: SEG40
10: PG5
11: PG5

Bit 1~0 **PGS11~PGS10**: PG4 pin-shared function selection
00: PG4
01: SEG39
10: PG4
11: PG4

• **PHS0 Register – BH67F5275**

Bit	7	6	5	4	3	2	1	0
Name	—	—	—	—	—	—	PHS01	PHS00
R/W	—	—	—	—	—	—	R/W	R/W
POR	—	—	—	—	—	—	0	0

Bit 7~2 Unimplemented, read as "0"

Bit 1~0 **PHS01~PHS00**: PH0 pin-shared function selection
00: PH0
01: SEG43
10: PH0
11: PH0

• **IFS0 Register**

Bit	7	6	5	4	3	2	1	0
Name	PTP2IPS	PTP1IPS	—	—	PTCK2PS	—	—	STCKPS
R/W	R/W	R/W	—	—	R/W	—	—	R/W
POR	0	0	—	—	0	—	—	0

Bit 7 **PTP2IPS**: PTP2I input source pin selection
0: PA4
1: PC2

Bit 6 **PTP1IPS**: PTP1I input source pin selection
0: PA3
1: PC0

Bit 5~4 Unimplemented, read as "0"

Bit 3 **PTCK2PS**: PTCK2 input source pin selection
0: PC3
1: PA7

Bit 2~1 Unimplemented, read as "0"

Bit 0 **STCKPS**: STCK input source pin selection
0: PA1
1: PA6

• **IFS1 Register**

Bit	7	6	5	4	3	2	1	0
Name	—	SPISCSBPS	SPISDIPS	SPISCKPS	—	—	SDISDAPS	RXPS
R/W	—	R/W	R/W	R/W	—	—	R/W	R/W
POR	—	0	0	0	—	—	0	0

Bit 7 Unimplemented, read as "0"

Bit 6 **SPISCSBPS**: $\overline{\text{SPISCS}}$ input source pin selection
0: PA4
1: PC4

Bit 5 **SPISDIPS**: SPISDI input source pin selection
0: PA6
1: PB3

Bit 4 **SPISCKPS**: SPISCK input source pin selection
0: PA5
1: PB2

Bit 3~2 Unimplemented, read as "0"

Bit 1 **SDISDAPS**: SDI/SDA input source pin selection
0: PA7
1: PC5

Bit 0 **RXPS**: RX/TX input source pin selection
0: PA7
1: PC5

I/O Pin Structures

The accompanying diagram illustrates the internal structure of the I/O logic function. As the exact logical construction of the I/O pin will differ from this drawing, it is supplied as a guide only to assist with the functional understanding of the I/O logic function. The wide range of pin-shared structures does not permit all types to be shown.

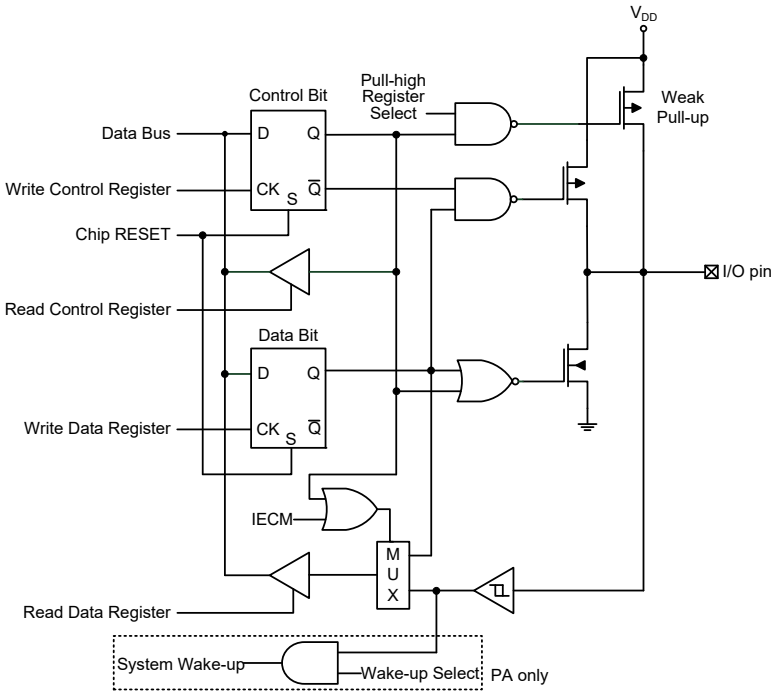

Logic Function Input/Output Structure

READ PORT Function

The READ PORT function is used to read data from I/O pins, which is specially designed for the IEC 60730 self-diagnostic test on the I/O function and A/D paths. After the self-diagnostic test on the I/O function and A/D paths are completed, users must disable the READ PORT function immediately. In cases other than the I/O function and A/D path self-diagnostic test, it is strongly recommended to disable the READ PORT function to avoid affecting other peripheral functions and causing unexpected consequences.

There is a register, IECC, which is used to control the READ PORT function. When a specific data pattern, “11001010”, is written into the IECC register, the internal signal named IECM will be set high to enable the READ PORT function. If the READ PORT function is enabled, the reading path is from the I/O pins. The value on the corresponding pins will be passed to the accumulator ACC when the read port instruction “mov a, Px” is executed, where the “x” stands for the corresponding I/O port name. However, when the IECC register content is set to any other values rather than “11001010”, the IECM internal signal will be cleared to 0 to disable the READ PORT function, and the reading path will be from the data latch or I/O pins. If the READ PORT function is disabled, the pin function will operate as the selected pin-shared function.

- **IECC Register**

Bit	7	6	5	4	3	2	1	0
Name	IECS7	IECS6	IECS5	IECS4	IECS3	IECS2	IECS1	IECS0
R/W	R/W	R/W	R/W	R/W	R/W	R/W	R/W	R/W
POR	0	0	0	0	0	0	0	0

Bit 7~0 **IECS7~IECS0**: READ PORT function enable control bit 7~ bit 0
11001010: IECM=1 – READ PORT function is enabled
Others: IECM=0 – READ PORT function is disabled

READ PORT Function	Disabled		Enabled	
Port Control Register Bit – PxC.n	1	0	1	0
I/O Function	Pin value	Data latch value	Pin value	
A/D Function	0			

Note: The value on the above table is the content of the ACC register after “mov a, Px” instruction is executed where “x” means the relevant port name.

The additional function of the READ PORT mode is to check the A/D path. When the READ PORT function is disabled, the A/D path from the external pin to the internal analog input will be switched off if the A/D input pin function is not selected by the corresponding selection bits. For the MCU with A/D converter channels, the desired A/D channel can be switched on by properly configuring the external analog input channel selection bits in the A/D Control Register together with the corresponding analog input pin function is selected. However, the additional function of the READ PORT mode is to force the A/D path to be switched on. As shown in the following example, when the AN0 is selected as the analog input channel as the READ PORT function is enabled, the AN0 analog input path will be switched on even if the AN0 analog input pin function is not selected. In this way, the AN0 analog input path can be examined by internally connecting the digital output on this shared pin with the AN0 analog input pin switch and then converting the corresponding digital data without any external analog input voltage connected.

Note that the A/D converter reference voltage should be equal to the I/O power supply voltage when examining the A/D path using the READ PORT function.

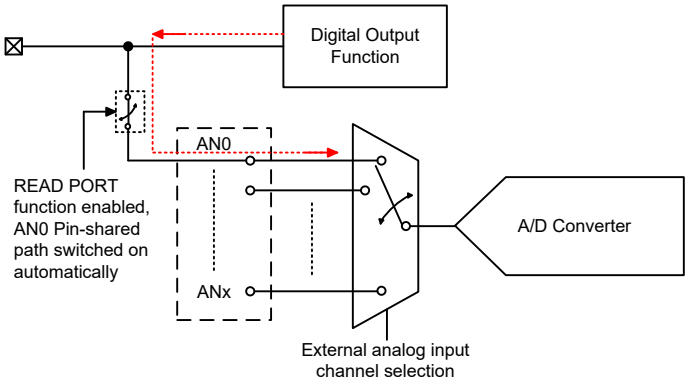

A/D Channel Input Path Internal Connection

Programming Considerations

Within the user program, one of the first things to consider is port initialisation. After a reset, all of the I/O data and port control registers will be set high. This means that all I/O pins will default to an input state, the level of which depends on the other connected circuitry and whether pull-high selections have been chosen. If the port control registers are then programmed to setup some pins as outputs, these output pins will have an initial high output value unless the associated port data registers are first programmed. Selecting which pins are inputs and which are outputs can be achieved byte-wide by loading the correct values into the appropriate port control register or by programming individual bits in the port control register using the "SET [m].i" and "CLR [m].i" instructions. Note that when using these bit control instructions, a read-modify-write operation takes place. The microcontroller must first read in the data on the entire port, modify it to the required new bit values and then rewrite this data back to the output ports.

Port A has the additional capability of providing wake-up function. When the devices are in the SLEEP or IDLE Mode, various methods are available to wake the devices up. One of these is a high to low transition of any of the Port A pins. Single or multiple pins on Port A can be setup to have this function.

Timer Modules – TM

One of the most fundamental functions in any microcontroller device is the ability to control and measure time. To implement time related functions the devices include several Timer Modules, generally abbreviated to the name TM. The TMs are multi-purpose timing units and serve to provide operations such as Timer/Counter, Input Capture, Compare Match Output and Single Pulse Output as well as being the functional unit for the generation of PWM signals. Each of the TMs has either two or three interrupts. The addition of input and output pins for each TM ensures that users are provided with timing units with a wide and flexible range of features.

The common features of the different TM types are described here with more detailed information provided in the individual Standard, Periodic and Audio Type TM sections.

Introduction

The devices contain several TMs and each individual TM can be categorised as a certain type, namely Standard Type TM, Periodic Type TM or Audio Type TM. The number of the Audio type and Standard type TM is one, having a reference name of STM and ATM respectively. The remaining three TMs are Periodic type with a reference name of PTM0~PTM2. Although similar in nature,

the different TM types vary in their feature complexity. The common features to all of the Standard, Periodic and Audio Type TMs will be described in this section and the detailed operation regarding each of the TM types will be described in separate sections. The main features and differences between the three types of TMs are summarised in the accompanying table.

TM Function	STM	PTM	ATM
Timer/Counter	√	√	√
Input Capture	√	√	—
Compare Match Output	√	√	√
PWM Output	√	√	√
Single Pulse Output	√	√	—
PWM Alignment	Edge	Edge	Edge
PWM Adjustment Period & Duty	Duty or Period	Duty or Period	Duty or Period

TM Function Summary

Device	STM	PTM	ATM
BH67F5265	16-bit STM	10-bit PTM0 10-bit PTM1 10-bit PTM2	—
BH67F5275	16-bit STM	10-bit PTM0 10-bit PTM1 10-bit PTM2	10-bit ATM

TM Name/Type Summary

TM Operation

The different types of TM offer a diverse range of functions, from simple timing operations to PWM signal generation. The key to understanding how the TM operates is to see it in terms of a free running count-up counter whose value is then compared with the value of pre-programmed internal comparators. When the free running count-up counter has the same value as the pre-programmed comparator, known as a compare match situation, a TM interrupt signal will be generated which can clear the counter and perhaps also change the condition of the TM output pin. The internal TM counter is driven by a user selectable clock source, which can be an internal clock or an external pin.

TM Clock Source

The clock source which drives the main counter in each TM can originate from various sources. The selection of the required clock source is implemented using the xTnCK2~xTnCK0 bits in the xTMn control registers, where “x” stands for S or P or A type TM and “n” stands for the specific TM serial number. For STM and ATM there is no serial number “n” in the relevant pin, register and control bit names since there are only an STM and an ATM in the devices. The clock source can be a ratio of the system clock, f_{SYS}, or the internal high clock, f_H, the f_{SUB} clock source or the external xTCKn pin. The xTCKn pin clock source is used to allow an external signal to drive the TM as an external clock source for event counting.

TM Interrupts

The Standard and Periodic Type TMs each have two internal interrupts, one for each of the internal comparator A or comparator P, which generate a TM interrupt when a compare match condition occurs. As the Audio Type TM has three internal comparators and comparator A or comparator B or comparator P compare match functions, it consequently has three internal interrupts. When a TM interrupt is generated, it can be used to clear the counter and also to change the state of the TM output pins.

TM External Pins

Each of the TMs, irrespective of what type, has one TM input pin, with the label xTCKn. The xTMn input pin, xTCKn, is essentially a clock source for the xTMn and is selected using the xTnCK2~xTnCK0 bits in the xTMnC0 register. This external TM input pin allows an external clock source to drive the internal TM. The xTCKn input pin can be chosen to have either a rising or falling active edge. The xTCKn pins are also used as the external trigger input pin in single pulse output mode for the STM and PTMn.

For STM and PTMn, another input pin, xTPnI, is the capture input whose active edge can be a rising edge, a falling edge or both rising and falling edges and the active edge transition type is selected using the xTnIO1~xTnIO0 bits in the xTMnC1 register. There is another capture input, PTCKn, for PTMn capture input mode, which can be used as the external trigger input source except the PTPnI pin.

The TMs each have one or two output pins, with the label xTPn and xTPnB. The xTPnB pin outputs the inverted signal of the xTPn. When the TM is in the Compare Match Output Mode, these pins can be controlled by the TM to switch to a high or low level or to toggle when a compare match situation occurs. The external xTPn and xTPnB output pins are also the pins where the TM generates the PWM output waveform.

As the TM input and output pins are pin-shared with other functions, the TM input and output functions must first be setup using relevant pin-shared function selection register. The details of the pin-shared function selection are described in the pin-shared function section.

Device	STM		PTMn		ATM	
	Input	Output	Input	Output	Input	Output
BH67F5265	STCK, STPI	STP, STPB	PTCK0, PTP0I PTCK1, PTP1I PTCK2, PTP2I	PTP0, PTP0B PTP1 PTP2	—	—
BH67F5275	STCK, STPI	STP, STPB	PTCK0, PTP0I PTCK1, PTP1I PTCK2, PTP2I	PTP0, PTP0B PTP1 PTP2	ATCK	ATP/ATP_PWM1, ATPB/ATP_PWM2

TM External Pins

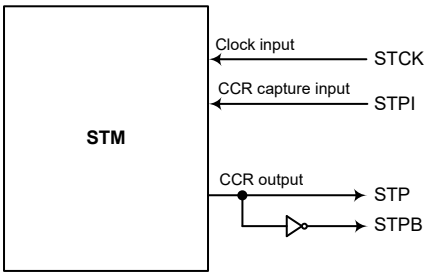

STM Function Pin Block Diagram

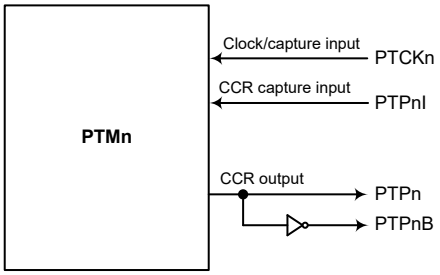

PTMn Function Pin Block Diagram (n=0~2)

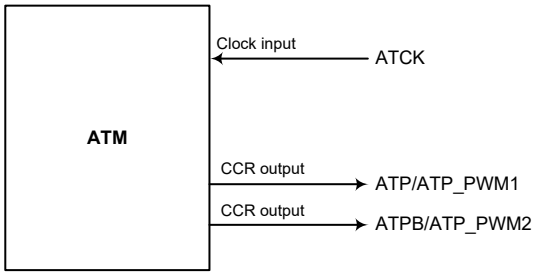

ATM Function Pin Block Diagram – BH67F5275

Programming Considerations

The TM Counter Registers and the Capture/Compare CCRA, CCRB and CCRP registers all have a low and high byte structure. The high bytes can be directly accessed, but as the low bytes can only be accessed via an internal 8-bit buffer, reading or writing to these register pairs must be carried out in a specific way. The important point to note is that data transfer to and from the 8-bit buffer and its related low byte only takes place when a write or read operation to its corresponding high byte is executed.

As the CCRA, CCRB and CCRP registers are implemented in the way shown in the following diagram and accessing these register pairs is carried out in a specific way as described above, it is recommended to use the "MOV" instruction to access the CCRA, CCRB and CCRP low byte registers, named xTMnAL, ATMBL and PTMnRPL, using the following access procedures. Accessing the CCRA, CCRB or CCRP low byte registers without following these access procedures will result in unpredictable values.

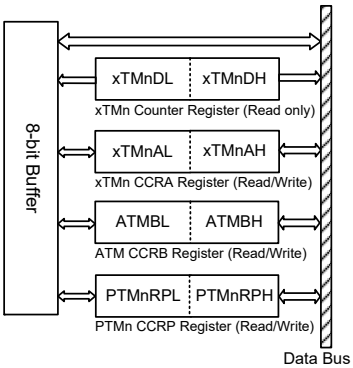

The following steps show the read and write procedures:

- Writing Data to CCRA or CCRB or CCRP
  - Step 1. Write data to Low Byte xTMnAL, ATMBL or PTMnRPL
    - Note that here data is only written to the 8-bit buffer.
  - Step 2. Write data to High Byte xTMnAH, ATMBH or PTMnRPH
    - Here data is written directly to the high byte registers and simultaneously data is latched from the 8-bit buffer to the Low Byte registers.
- Reading Data from the Counter Registers and CCRA, CCRB or CCRP
  - Step 1. Read data from the High Byte xTMnDH, xTMnAH, ATMBH or PTMnRPH
    - Here data is read directly from the High Byte registers and simultaneously data is latched from the Low Byte register into the 8-bit buffer.
  - Step 2. Read data from the Low Byte xTMnDL, xTMnAL, ATMBL or PTMnRPL
    - This step reads data from the 8-bit buffer.

Standard Type TM – STM

The Standard Type TM contains five operating modes, which are Compare Match Output, Timer/Event Counter, Capture Input, Single Pulse Output and PWM Output modes. The Standard TM can be controlled with two external input pins and can drive two external output pins.

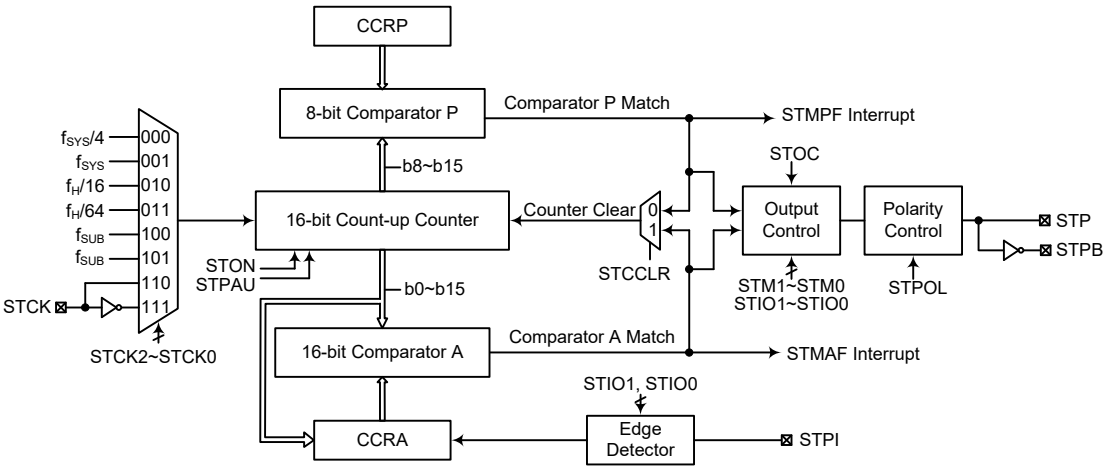

Note: The STM external pins are pin-shared with other functions, therefore before using the STM function, the pin-shared function registers must be set properly to enable the STM pin function. The STCK and STPI pins, if used, must also be set as an input by setting the corresponding bits in the port control register.

16-bit Standard Type TM Block Diagram

Standard Type TM Operation

The Standard Type TM core is a 16-bit count-up counter which is driven by a user selectable internal or external clock source. There are also two internal comparators with the names, Comparator A and Comparator P. These comparators will compare the value in the counter with CCRP and CCRA registers. The CCRP comparator is 8-bit wide whose value is compared with the highest 8 bits in the counter while the CCRA is 16 bits and therefore compares all counter bits.

The only way of changing the value of the 16-bit counter using the application program, is to clear the counter by changing the STON bit from low to high. The counter will also be cleared automatically by a counter overflow or a compare match with one of its associated comparators. When these conditions occur, an STM interrupt signal will also usually be generated. The Standard Type TM can operate in a number of different operational modes, can be driven by different clock sources including an input pin and can also control two output pins. All operating setup conditions are selected using relevant internal registers.

Standard Type TM Register Description

Overall operation of the Standard TM is controlled using a series of registers. A read only register pair exists to store the internal counter 16-bit value, while a read/write register pair exists to store the internal 16-bit CCRA value. The STMRP register is used to store the 8-bit CCRP bits. The remaining two registers are control registers which setup the different operating and control modes.

Register Name	Bit							
	7	6	5	4	3	2	1	0
STMC0	STPAU	STCK2	STCK1	STCK0	STON	—	—	—
STMC1	STM1	STM0	STIO1	STIO0	STOC	STPOL	STDPX	STCCLR
STMDL	D7	D6	D5	D4	D3	D2	D1	D0
STMDH	D15	D14	D13	D12	D11	D10	D9	D8
STMAL	D7	D6	D5	D4	D3	D2	D1	D0
STMAH	D15	D14	D13	D12	D11	D10	D9	D8
STMRP	D7	D6	D5	D4	D3	D2	D1	D0

16-bit Standard TM Register List

- **STMC0 Register**

Bit	7	6	5	4	3	2	1	0
Name	STPAU	STCK2	STCK1	STCK0	STON	—	—	—
R/W	R/W	R/W	R/W	R/W	R/W	—	—	—
POR	0	0	0	0	0	—	—	—

Bit 7 **STPAU**: STM counter pause control
0: Run
1: Pause

The counter can be paused by setting this bit high. Clearing the bit to zero restores normal counter operation. When in a Pause condition the STM will remain powered up and continue to consume power. The counter will retain its residual value when this bit changes from low to high and resume counting from this value when the bit changes to a low value again.

Bit 6~4 **STCK2~STCK0**: STM counter clock selection
000: $f_{SYS}/4$
001: f_{SYS}
010: $f_H/16$
011: $f_H/64$
100: f_{SUB}
101: f_{SUB}
110: STCK rising edge clock
111: STCK falling edge clock

These three bits are used to select the clock source for the STM. The external pin clock source can be chosen to be active on the rising or falling edge. The clock source f_{SYS} is the system clock, while f_H and f_{SUB} are other internal clocks, the details of which can be found in the “Operating Modes and System Clocks” section.

Bit 3 **STON**: STM counter on/off control
0: Off
1: On

This bit controls the overall on/off function of the STM. Setting the bit high enables the counter to run while clearing the bit disables the STM. Clearing this bit to zero will stop the counter from counting and turn off the STM which will reduce its power consumption. When the bit changes state from low to high the internal counter value will be reset to zero, however when the bit changes from high to low, the internal counter will retain its residual value until the bit returns high again. If the STM is in the Compare Match Output Mode, PWM Output Mode or Single Pulse Output Mode then the STM output pin will be reset to its initial condition, as specified by the STOC bit, when the STON bit changes from low to high.

Bit 2~0 Unimplemented, read as “0”

• **STMC1 Register**

Bit	7	6	5	4	3	2	1	0
Name	STM1	STM0	STIO1	STIO0	STOC	STPOL	STDPX	STCCLR
R/W	R/W	R/W	R/W	R/W	R/W	R/W	R/W	R/W
POR	0	0	0	0	0	0	0	0

Bit 7~6 **STM1~STM0**: STM operating mode selection
00: Compare Match Output Mode
01: Capture Input Mode
10: PWM Output Mode or Single Pulse Output Mode
11: Timer/Counter Mode

These bits setup the required operating mode for the STM. To ensure reliable operation the STM should be switched off before any changes are made to the STM1 and STM0 bits. In the Timer/Counter Mode, the STM output pin state is undefined.

Bit 5~4 **STIO1~STIO0**: STM external pin function selection

Compare Match Output Mode
00: No change
01: Output low
10: Output high
11: Toggle output

PWM Output Mode/Single Pulse Output Mode
00: PWM output inactive state
01: PWM output active state
10: PWM output
11: Single Pulse Output

Capture Input Mode
00: Input capture at rising edge of STPI
01: Input capture at falling edge of STPI
10: Input capture at rising/falling edge of STPI
11: Input capture disabled

Timer/Counter Mode
Unused

These two bits are used to determine how the STM external pin changes state when a certain condition is reached. The function that these bits select depends upon in which mode the STM is running.

In the Compare Match Output Mode, the STIO1 and STIO0 bits determine how the STM output pin changes state when a compare match occurs from the Comparator A. The STM output pin can be setup to switch high, switch low or to toggle its present state when a compare match occurs from the Comparator A. When the bits are both zero, then no change will take place on the output. The initial value of the STM output pin should be setup using the STOC bit in the STMC1 register. Note that the output level requested by the STIO1 and STIO0 bits must be different from the initial value setup using the STOC bit otherwise no change will occur on the STM output pin when a compare match occurs. After the STM output pin changes state, it can be reset to its initial level by changing the level of the STON bit from low to high.

In the PWM Output Mode, the STIO1 and STIO0 bits determine how the STM output pin changes state when a certain compare match condition occurs. The PWM output function is modified by changing these two bits. It is necessary to only change the values of the STIO1 and STIO0 bits only after the STM has been switched off. Unpredictable PWM outputs will occur if the STIO1 and STIO0 bits are changed when the STM is running.

Bit 3 **STOC**: STM STP output control

Compare Match Output Mode
0: Initial low
1: Initial high

PWM Output Mode/Single Pulse Output Mode
0: Active low
1: Active high

This is the output control bit for the STM output pin. Its operation depends upon whether STM is being used in the Compare Match Output Mode or in the PWM Output Mode / Single Pulse Output Mode. It has no effect if the STM is in the Timer/Counter Mode. In the Compare Match Output Mode it determines the logic level of the STM output pin before a compare match occurs. In the PWM Output Mode it determines if the PWM signal is active high or active low. In the Single Pulse Output Mode it determines the logic level of the STM output pin when the STON bit changes from low to high.

Bit 2 **STPOL**: STM STP output polarity control
0: Non-inverted
1: Inverted

This bit controls the polarity of the STP output pin. When the bit is set high the STM output pin will be inverted and not inverted when the bit is zero. It has no effect if the STM is in the Timer/Counter Mode.

Bit 1 **STDPX**: STM PWM duty/period control
0: CCRP – period; CCRA – duty
1: CCRP – duty; CCRA – period

This bit determines which of the CCRA and CCRP registers are used for period and duty control of the PWM waveform.

Bit 0 **STCCLR**: STM counter clear condition selection
0: Comparator P match
1: Comparator A match

This bit is used to select the method which clears the counter. Remember that the Standard TM contains two comparators, Comparator A and Comparator P, either of which can be selected to clear the internal counter. With the STCCLR bit set high, the counter will be cleared when a compare match occurs from the Comparator A. When the bit is low, the counter will be cleared when a compare match occurs from the Comparator P or with a counter overflow. A counter overflow clearing method can only be implemented if the CCRP bits are all cleared to zero. The STCCLR bit is not used in the PWM Output, Single Pulse Output or Capture Input Mode.

- **STMDL Register**

Bit	7	6	5	4	3	2	1	0
Name	D7	D6	D5	D4	D3	D2	D1	D0
R/W	R	R	R	R	R	R	R	R
POR	0	0	0	0	0	0	0	0

Bit 7~0 **D7~D0**: STM Counter Low Byte Register bit 7 ~ bit 0
STM 16-bit Counter bit 7 ~ bit 0

• **STMDH Register**

Bit	7	6	5	4	3	2	1	0
Name	D15	D14	D13	D12	D11	D10	D9	D8
R/W	R	R	R	R	R	R	R	R
POR	0	0	0	0	0	0	0	0

Bit 7~0 **D15~D8**: STM Counter High Byte Register bit 7 ~ bit 0
STM 16-bit Counter bit 15 ~ bit 8

• **STMAL Register**

Bit	7	6	5	4	3	2	1	0
Name	D7	D6	D5	D4	D3	D2	D1	D0
R/W	R/W	R/W	R/W	R/W	R/W	R/W	R/W	R/W
POR	0	0	0	0	0	0	0	0

Bit 7~0 **D7~D0**: STM CCRA Low Byte Register bit 7 ~ bit 0
STM 16-bit CCRA bit 7 ~ bit 0

• **STMAH Register**

Bit	7	6	5	4	3	2	1	0
Name	D15	D14	D13	D12	D11	D10	D9	D8
R/W	R/W	R/W	R/W	R/W	R/W	R/W	R/W	R/W
POR	0	0	0	0	0	0	0	0

Bit 7~0 **D15~D8**: STM CCRA High Byte Register bit 7 ~ bit 0
STM 16-bit CCRA bit 15 ~ bit 8

• **STMRP Register**

Bit	7	6	5	4	3	2	1	0
Name	D7	D6	D5	D4	D3	D2	D1	D0
R/W	R/W	R/W	R/W	R/W	R/W	R/W	R/W	R/W
POR	0	0	0	0	0	0	0	0

Bit 7~0 **D7~D0**: STM CCRP 8-bit Register, Compared with the STM Counter bit 15 ~ bit 8
Comparator P Match period =
0: 65536 STM clocks
1~255: (1~255)×256 STM clocks

These eight bits are used to setup the value on the internal CCRP 8-bit register, which are then compared with the internal counter's highest eight bits. The result of this comparison can be selected to clear the internal counter if the STCCLR bit is cleared to zero. Setting the STCCLR bit to zero ensures that a compare match with the CCRP values will reset the internal counter. As the CCRP bits are only compared with the highest eight counter bits, the compare values exist in 256 clock cycle multiples. Clearing all eight bits to zero is in effect allowing the counter to overflow at its maximum value.

Standard Type TM Operation Modes

The Standard Type TM can operate in one of five operating modes, Compare Match Output Mode, PWM Output Mode, Single Pulse Output Mode, Capture Input Mode or Timer/Counter Mode. The operating mode is selected using the STM1 and STM0 bits in the STMC1 register.

Compare Match Output Mode

To select this mode, bits STM1 and STM0 in the STMC1 register, should be set to 00 respectively. In this mode once the counter is enabled and running it can be cleared by three methods. These are a counter overflow, a compare match from Comparator A and a compare match from Comparator P. When the STCCLR bit is low, there are two ways in which the counter can be cleared. One is when a compare match from Comparator P, the other is when the CCRP bits are all zero which allows the counter to overflow. Here both STMAF and STMPF interrupt request flags for Comparator A and Comparator P respectively, will both be generated.

If the STCCLR bit in the STMC1 register is high then the counter will be cleared when a compare match occurs from Comparator A. However, here only the STMAF interrupt request flag will be generated even if the value of the CCRP bits is less than that of the CCRA registers. Therefore when STCCLR is high no STMPF interrupt request flag will be generated. In the Compare Match Output Mode, the CCRA cannot be cleared to “0”.

If the CCRA bits are all zero, the counter will overflow when it reaches its maximum 16-bit, FFFF Hex, value, however here the STMAF interrupt request flag will not be generated.

As the name of the mode suggests, after a comparison is made, the STM output pin, will change state. The STM output pin condition however only changes state when an STMAF interrupt request flag is generated after a compare match occurs from Comparator A. The STMPF interrupt request flag, generated from a compare match occurs from Comparator P, will have no effect on the STM output pin. The way in which the STM output pin changes state are determined by the condition of the STIO1 and STIO0 bits in the STMC1 register. The STM output pin can be selected using the STIO1 and STIO0 bits to go high, to go low or to toggle from its present condition when a compare match occurs from Comparator A. The initial condition of the STM output pin, which is setup after the STON bit changes from low to high, is setup using the STOC bit. Note that if the STIO1 and STIO0 bits are zero then no pin change will take place.

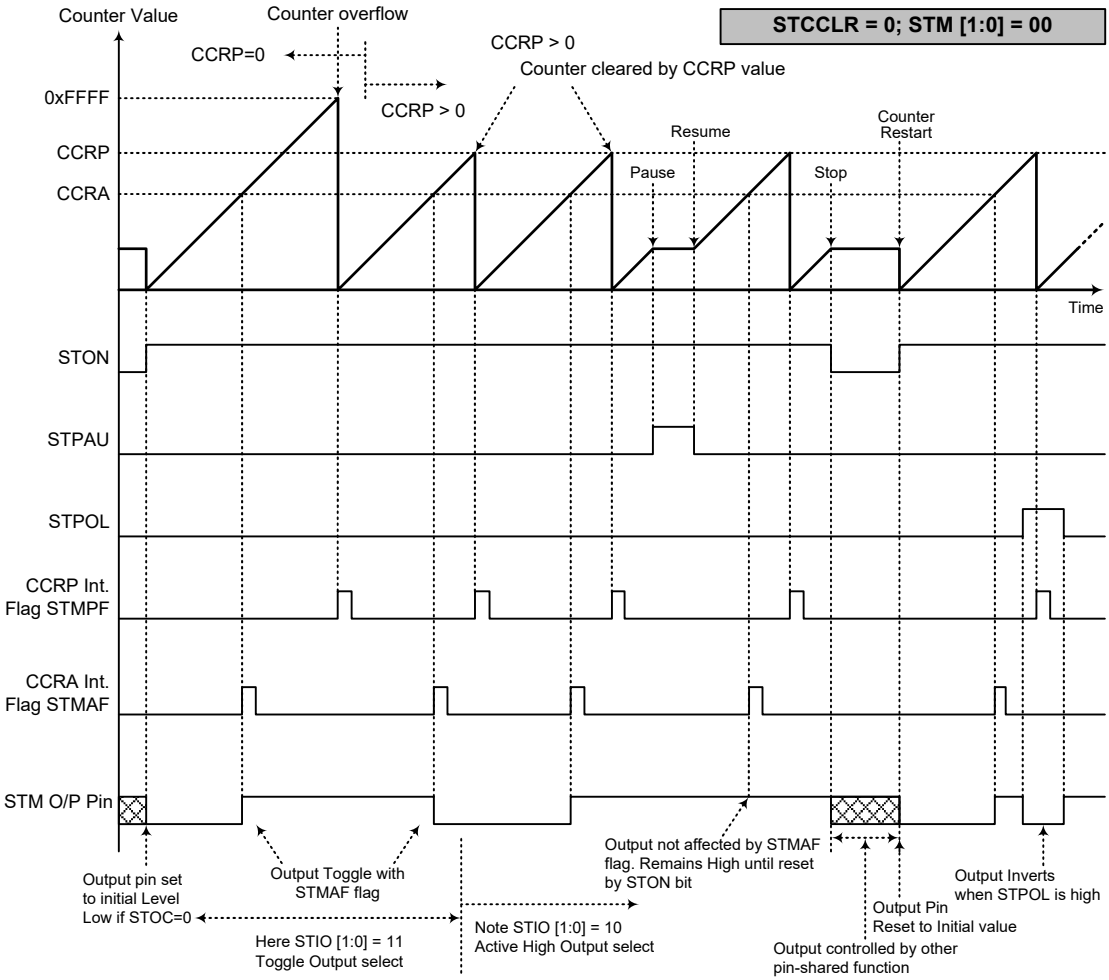

Compare Match Output Mode – STCCLR=0

Note: 1. With STCCLR=0 a Comparator P match will clear the counter
2. The STM output pin is controlled only by the STMAF flag
3. The output pin is reset to initial state by an STON bit rising edge

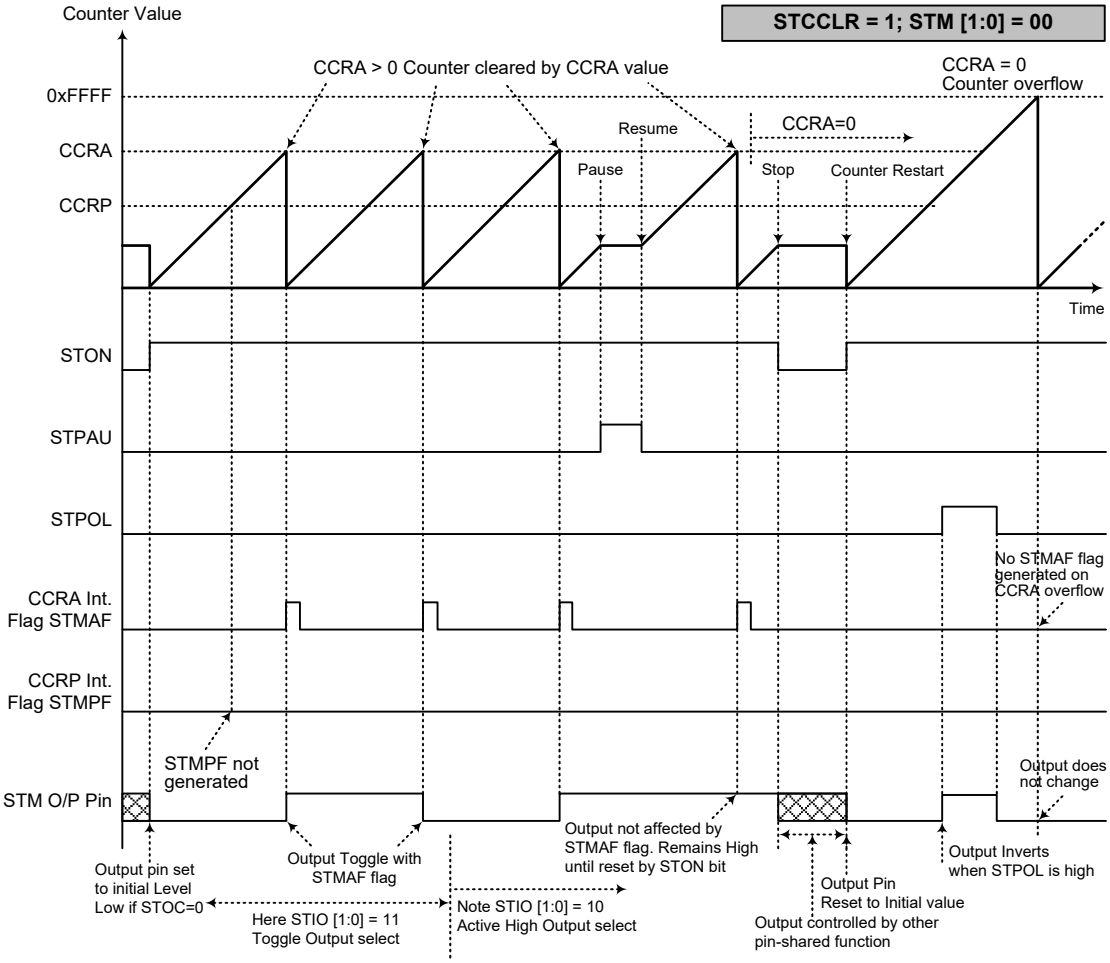

Compare Match Output Mode – STCCLR=1

Note: 1. With STCCLR=1 a Comparator A match will clear the counter
2. The STM output pin is controlled only by the STMAF flag
3. The output pin is reset to its initial state by an STON bit rising edge
4. A STMPF flag is not generated when STCCLR=1

Timer/Counter Mode

To select this mode, bits STM1 and STM0 in the STMC1 register should be set to 11 respectively. The Timer/Counter Mode operates in an identical way to the Compare Match Output Mode generating the same interrupt flags. The exception is that in the Timer/Counter Mode the STM output pin is not used. Therefore the above description and Timing Diagrams for the Compare Match Output Mode can be used to understand its function. As the STM output pin is not used in this mode, the pin can be used as a normal I/O pin or other pin-shared function.

PWM Output Mode

To select this mode, bits STM1 and STM0 in the STMC1 register should be set to 10 respectively. The PWM function within the STM is useful for applications which require functions such as motor control, heating control, illumination control etc. By providing a signal of fixed frequency but of varying duty cycle on the STM output pin, a square waveform AC waveform can be generated with varying equivalent DC RMS values.

As both the period and duty cycle of the PWM waveform can be controlled, the choice of generated waveform is extremely flexible. In the PWM Output mode, the STCCLR bit has no effect as the PWM period. Both of the CCRP and CCRA registers are used to generate the PWM waveform, one register is used to clear the internal counter and thus control the PWM waveform frequency, while the other one register is used to control the duty cycle. Which register is used to control either frequency or duty cycle is determined using the STDPX bit in the STMC1 register. The PWM waveform frequency and duty cycle can therefore be controlled by the values in the CCRA and CCRP registers.

An interrupt flag, one for each of the CCRA and CCRP, will be generated when a compare match occurs from either Comparator A or Comparator P. The STOC bit in the STMC1 register is used to select the required polarity of the PWM waveform while the two STIO1 and STIO0 bits are used to enable the PWM output or to force the STM output pin to a fixed high or low level. The STPOL bit is used to reverse the polarity of the PWM output waveform.

- **16-bit STM, PWM Output Mode, Edge-aligned Mode, STDPX=0**

CCRP	1~255	0
Period	CCRP×256	65536
Duty	CCRA	

If f_{SYS}=16MHz, STM clock source is $f_{SYS}/4$, CCRP=2 and CCRA=128,

The STM PWM output frequency=$(f_{SYS}/4)/(2\times256)=f_{SYS}/2048$=8kHz, duty=128/(2×256)=25%.

If the Duty value defined by the CCRA register is equal to or greater than the Period value, then the PWM output duty is 100%.

- **16-bit STM, PWM Output Mode, Edge-aligned Mode, STDPX=1**

CCRP	1~255	0
Period	CCRA	
Duty	CCRP×256	65536

The PWM output period is determined by the CCRA register value together with the STM clock while the PWM duty cycle is defined by the CCRP register value.

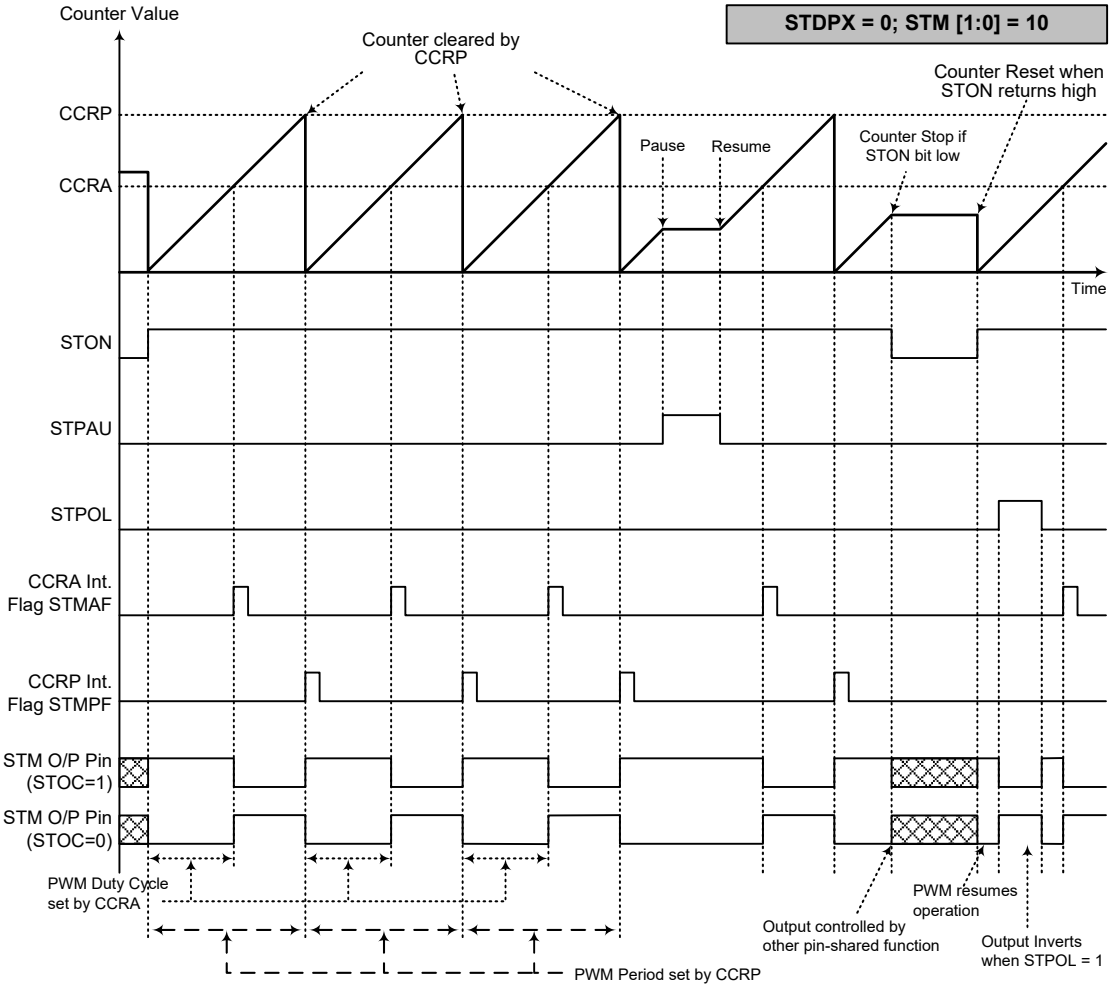

PWM Output Mode – STDPX=0

Note: 1. Here STDPX=0 – Counter cleared by CCRP
2. A counter clear sets the PWM Period
3. The internal PWM function continues running even when STIO[1:0]=00 or 01
4. The STCCLR bit has no influence on PWM operation

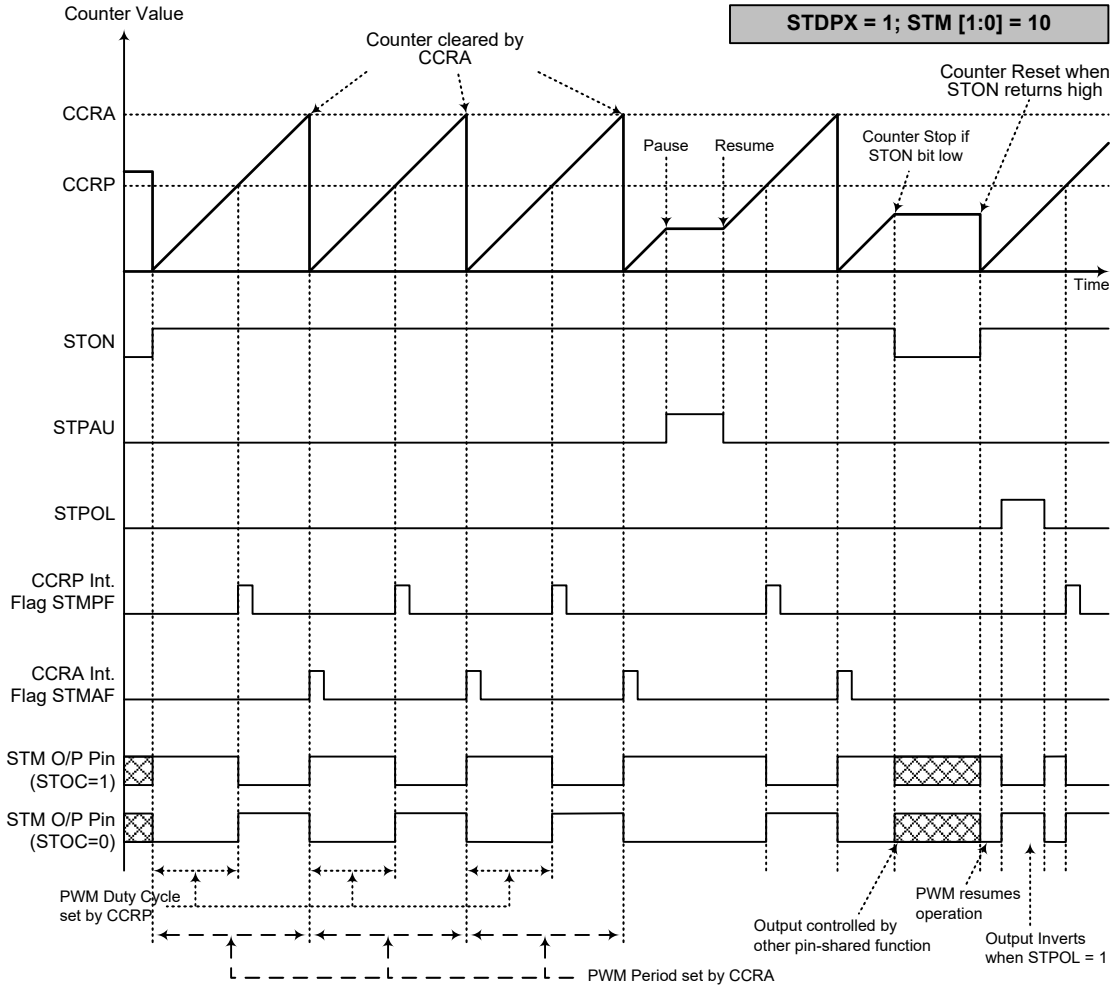

PWM Output Mode – STDPX=1

Note: 1. Here STDPX=1 – Counter cleared by CCRA
2. A counter clear sets the PWM Period
3. The internal PWM function continues even when STIO[1:0]=00 or 01
4. The STCCLR bit has no influence on PWM operation

Single Pulse Output Mode

To select this mode, bits STM1 and STM0 in the STMC1 register should be set to 10 respectively and also the STIO1 and STIO0 bits should be set to 11 respectively. The Single Pulse Output Mode, as the name suggests, will generate a single shot pulse on the STM output pin.

The trigger for the pulse output leading edge is a low to high transition of the STON bit, which can be implemented using the application program. However in the Single Pulse Output Mode, the STON bit can also be made to automatically change from low to high using the external STCK pin, which will in turn initiate the Single Pulse output. When the STON bit transitions to a high level, the counter will start running and the pulse leading edge will be generated. The STON bit should remain high when the pulse is in its active state. The generated pulse trailing edge will be generated when the STON bit is cleared to zero, which can be implemented using the application program or when a compare match occurs from Comparator A.

However a compare match from Comparator A will also automatically clear the STON bit and thus generate the Single Pulse output trailing edge. In this way the CCRA value can be used to control the pulse width. A compare match from Comparator A will also generate an STM interrupt. The counter can only be reset back to zero when the STON bit changes from low to high when the counter restarts. In the Single Pulse Output Mode CCRP is not used. The STCCLR and STDPX bits are not used in this Mode.

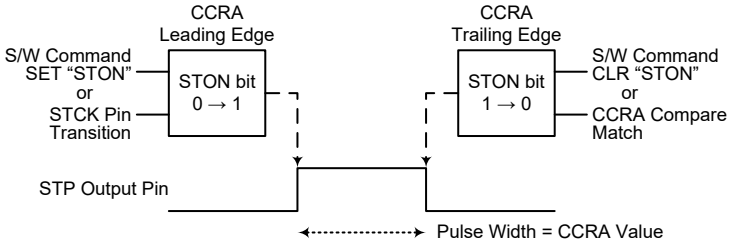

Single Pulse Generation

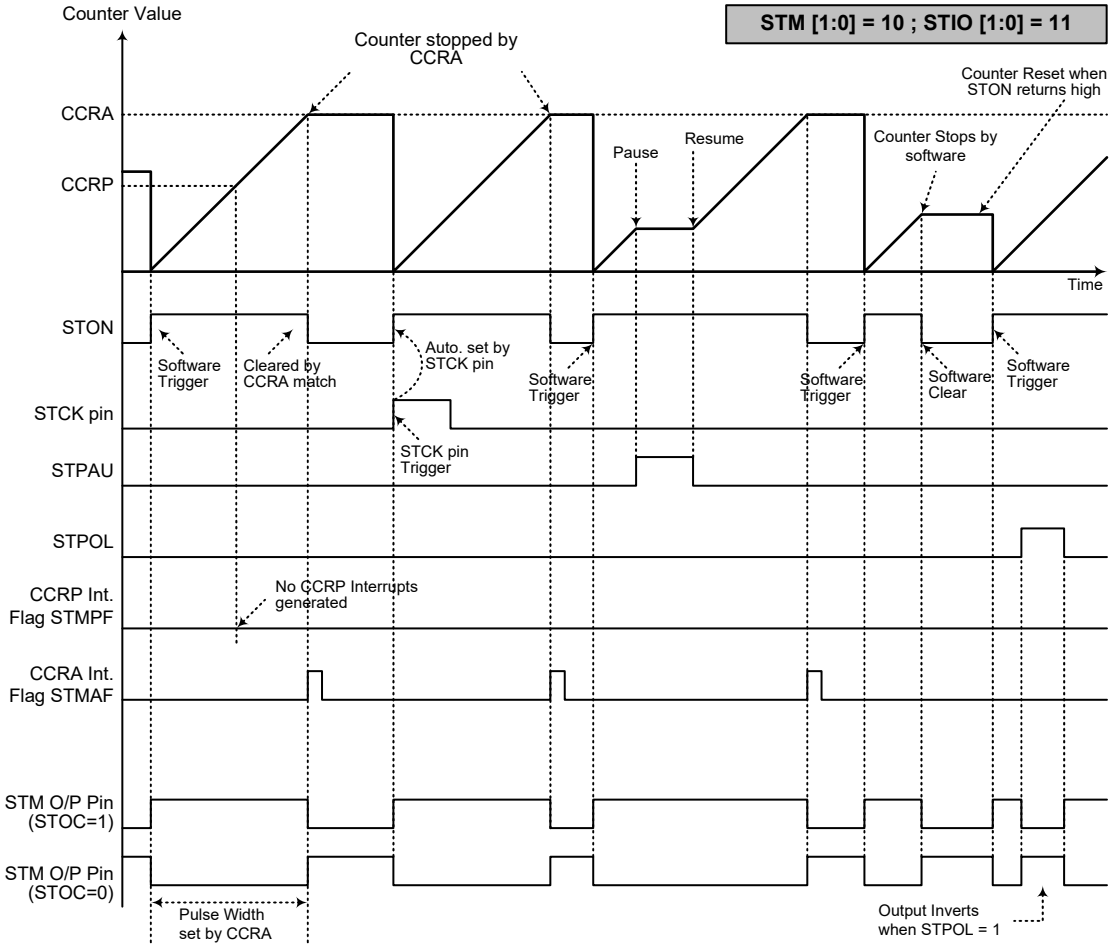

Single Pulse Output Mode

Note: 1. Counter stopped by CCRA
2. CCRP is not used
3. The pulse triggered by the STCK pin or by setting the STON bit high
4. A STCK pin active edge will automatically set the STON bit high
5. In the Single Pulse Output Mode, STIO[1:0] must be set to “11” and cannot be changed

Capture Input Mode

To select this mode bits STM1 and STM0 in the STMC1 register should be set to 01 respectively. This mode enables external signals to capture and store the present value of the internal counter and can therefore be used for applications such as pulse width measurements. The external signal is supplied on the STPI pin, whose active edge can be a rising edge, a falling edge or both rising and falling edges; the active edge transition type is selected using the STIO1 and STIO0 bits in the STMC1 register. The counter is started when the STON bit changes from low to high which is initiated using the application program.

When the required edge transition appears on the STPI pin the present value in the counter will be latched into the CCRA registers and an STM interrupt generated. Irrespective of what events occur on the STPI pin the counter will continue to free run until the STON bit changes from high to low. When a CCRP compare match occurs the counter will reset back to zero; in this way the CCRP value can be used to control the maximum counter value. When a CCRP compare match occurs from Comparator P, an STM interrupt will also be generated. Counting the number of overflow interrupt signals from the CCRP can be a useful method in measuring long pulse widths. The STIO1 and STIO0 bits can select the active trigger edge on the STPI pin to be a rising edge, falling edge or both edge types. If the STIO1 and STIO0 bits are both set high, then no capture operation will take place irrespective of what happens on the STPI pin, however it must be noted that the counter will continue to run.

There are some considerations that should be noted. If the captured pulse width is less than 2 timer clock periods, it may be ignored by hardware. After the counter value is latched to the CCRA registers by an active capture edge, the STMAF flag will be set high after 0.5 timer clock periods. The delay time from the active capture edge received to the action of latching counter value to CCRA registers is less than 1.5 timer clock periods.

The STCCLR and STDPX bits are not used in this Mode.

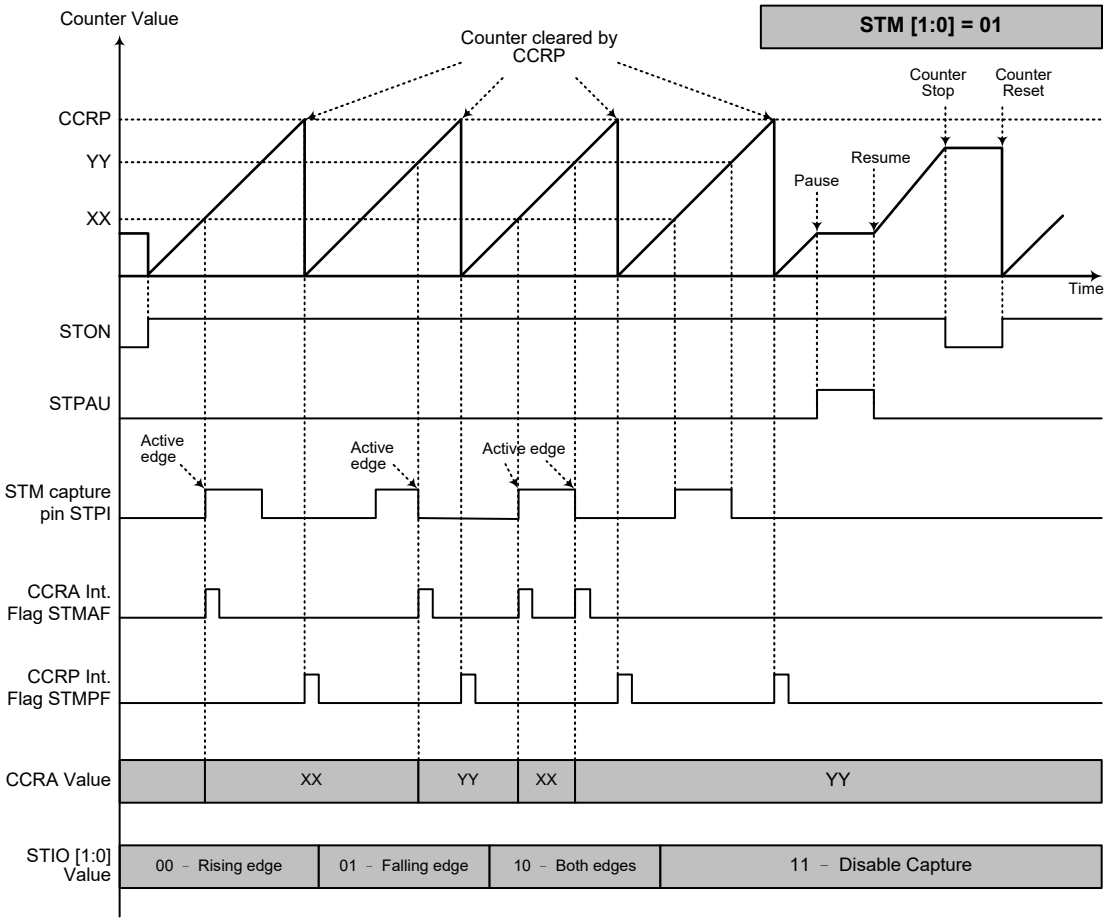

Capture Input Mode

Note: 1. STM[1:0]=01 and active edge set by the STIO[1:0] bits
2. A STM Capture input pin active edge transfers the counter value to CCRA
3. STCCLR bit not used
4. No output function – STOC and STPOL bits are not used
5. CCRP determines the counter value and the counter has a maximum count value when CCRP is equal to zero
6. The capture input mode cannot be used if the selected STM counter clock is not available

Periodic Type TM – PTM

The Periodic Type TM contains five operating modes, which are Compare Match Output, Timer/Event Counter, Capture Input, Single Pulse Output and PWM Output modes. The Periodic TM can also be controlled with two external input pins and can drive one or two external output pins.

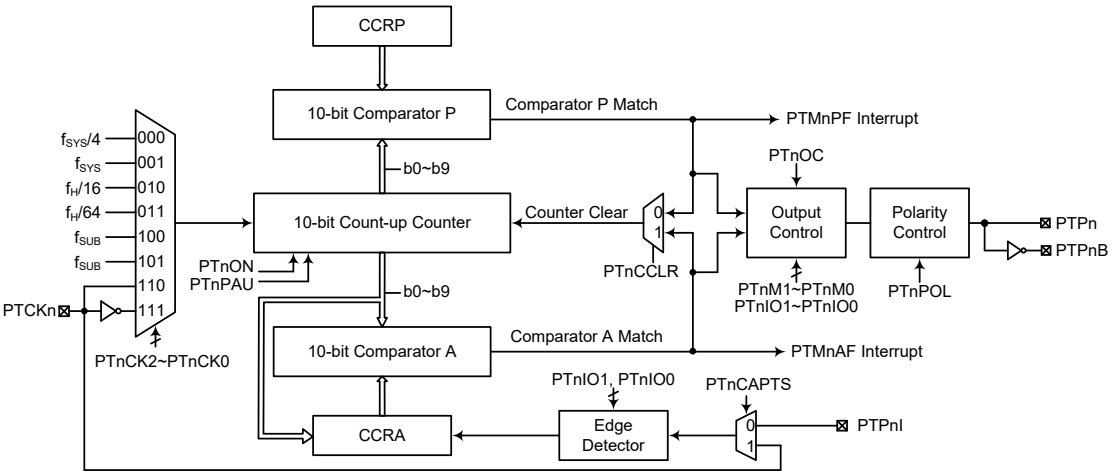

Note: 1. The PTMn external pins are pin-shared with other functions, therefore before using the PTMn function the pin-shared function registers must be set properly to enable the PTMn pin function. The PTCKn and PTPnI pins, if used, must also be set as an input by setting the corresponding bits in the port control register.

2. The PTM1~PTM2 each have only one output pin, PTPn.

10-bit Periodic Type TM Block Diagram (n=0~2)

Periodic Type TM Operation

The size of Periodic Type TM is 10-bit wide and its core is a 10-bit count-up counter which is driven by a user selectable internal or external clock source. There are also two internal comparators with the names, Comparator A and Comparator P. These comparators will compare the value in the counter with CCRP and CCRA registers. The CCRP and CCRA comparators are 10-bit wide whose value is respectively compared with all counter bits.

The only way of changing the value of the 10-bit counter using the application program is to clear the counter by changing the PTnON bit from low to high. The counter will also be cleared automatically by a counter overflow or a compare match with one of its associated comparators. When these conditions occur, a PTMn interrupt signal will also usually be generated. The Periodic Type TM can operate in a number of different operational modes, can be driven by different clock sources including an input pin and can also control one or two output pins. All operating setup conditions are selected using relevant internal registers.

Periodic Type TM Register Description

Overall operation of the Periodic TM is controlled using a series of registers. A read only register pair exists to store the internal counter 10-bit value, while two read/write register pairs exist to store the internal 10-bit CCRA and CCRP value. The remaining two registers are control registers which setup the different operating and control modes.

Register Name	Bit							
	7	6	5	4	3	2	1	0
PTMnC0	PTnPAU	PTnCK2	PTnCK1	PTnCK0	PTnON	—	—	—
PTMnC1	PTnM1	PTnM0	PTnIO1	PTnIO0	PTnOC	PTnPOL	PTnCAPTS	PTnCCLR
PTMnDL	D7	D6	D5	D4	D3	D2	D1	D0
PTMnDH	—	—	—	—	—	—	D9	D8
PTMnAL	D7	D6	D5	D4	D3	D2	D1	D0
PTMnAH	—	—	—	—	—	—	D9	D8
PTMnRPL	D7	D6	D5	D4	D3	D2	D1	D0
PTMnRPH	—	—	—	—	—	—	D9	D8

10-bit Periodic TM Register List (n=0~2)

- **PTMnC0 Register (n=0~2)**

Bit	7	6	5	4	3	2	1	0
Name	PTnPAU	PTnCK2	PTnCK1	PTnCK0	PTnON	—	—	—
R/W	R/W	R/W	R/W	R/W	R/W	—	—	—
POR	0	0	0	0	0	—	—	—

Bit 7 **PTnPAU**: PTMn counter pause control
0: Run
1: Pause

The counter can be paused by setting this bit high. Clearing the bit to zero restores normal counter operation. When in a Pause condition the PTMn will remain powered up and continue to consume power. The counter will retain its residual value when this bit changes from low to high and resume counting from this value when the bit changes to a low value again.

Bit 6~4 **PTnCK2~PTnCK0**: PTMn counter clock selection
000: $f_{SYS}/4$
001: f_{SYS}
010: $f_H/16$
011: $f_H/64$
100: f_{SUB}
101: f_{SUB}
110: PTCKn rising edge clock
111: PTCKn falling edge clock

These three bits are used to select the clock source for the PTMn. The external pin clock source can be chosen to be active on the rising or falling edge. The clock source f_{SYS} is the system clock, while f_H and f_{SUB} are other internal clocks, the details of which can be found in the “Operating Modes and System Clocks” section.

Bit 3 **PTnON**: PTMn counter on/off control
0: Off
1: On

This bit controls the overall on/off function of the PTMn. Setting the bit high enables the counter to run while clearing the bit disables the PTMn. Clearing this bit to zero will stop the counter from counting and turn off the PTMn which will reduce its power consumption. When the bit changes state from low to high the internal counter value will be reset to zero, however when the bit changes from high to low, the internal counter will retain its residual value until the bit returns high again.

If the PTMn is in the Compare Match Output Mode, PWM Output Mode or Single Pulse Output Mode then the PTMn output pin will be reset to its initial condition, as specified by the PTnOC bit, when the PTnON bit changes from low to high.

Bit 2~0 Unimplemented, read as “0”

• **PTMnC1 Register (n=0~2)**

Bit	7	6	5	4	3	2	1	0
Name	PTnM1	PTnM0	PTnIO1	PTnIO0	PTnOC	PTnPOL	PTnCAPTS	PTnCCLR
R/W	R/W	R/W	R/W	R/W	R/W	R/W	R/W	R/W
POR	0	0	0	0	0	0	0	0

Bit 7~6 **PTnM1~PTnM0**: PTMn operating mode selection
00: Compare Match Output Mode
01: Capture Input Mode
10: PWM Output Mode or Single Pulse Output Mode
11: Timer/Counter Mode

These bits setup the required operating mode for the PTMn. To ensure reliable operation the PTMn should be switched off before any changes are made to the PTnM1 and PTnM0 bits. In the Timer/Counter Mode, the PTMn output pin state is undefined.

Bit 5~4 **PTnIO1~PTnIO0**: PTMn external pin function selection

Compare Match Output Mode
00: No change
01: Output low
10: Output high
11: Toggle output

PWM Output Mode/Single Pulse Output Mode
00: PWM output inactive state
01: PWM output active state
10: PWM output
11: Single Pulse Output

Capture Input Mode
00: Input capture at rising edge of PTPnI or PTCKn
01: Input capture at falling edge of PTPnI or PTCKn
10: Input capture at rising/falling edge of PTPnI or PTCKn
11: Input capture disabled

Timer/Counter Mode
Unused

These two bits are used to determine how the PTMn external pin changes state when a certain condition is reached. The function that these bits select depends upon in which mode the PTMn is running.

In the Compare Match Output Mode, the PTnIO1 and PTnIO0 bits determine how the PTMn output pin changes state when a compare match occurs from the Comparator A. The PTMn output pin can be setup to switch high, switch low or to toggle its present state when a compare match occurs from the Comparator A. When the bits are both zero, then no change will take place on the output. The initial value of the PTMn output pin should be setup using the PTnOC bit in the PTMnC1 register. Note that the output level requested by the PTnIO1 and PTnIO0 bits must be different from the initial value setup using the PTnOC bit otherwise no change will occur on the PTMn output pin when a compare match occurs. After the PTMn output pin changes state, it can be reset to its initial level by changing the level of the PTnON bit from low to high.

In the PWM Output Mode, the PTnIO1 and PTnIO0 bits determine how the TM output pin changes state when a certain compare match condition occurs. The PTMn output function is modified by changing these two bits. It is necessary to only change the values of the PTnIO1 and PTnIO0 bits only after the PTMn has been switched off. Unpredictable PWM outputs will occur if the PTnIO1 and PTnIO0 bits are changed when the PTMn is running.

Bit 3 **PTnOC**: PTMn PTPn output control

Compare Match Output Mode
0: Initial low
1: Initial high

PWM Output Mode/Single Pulse Output Mode
0: Active low
1: Active high

This is the output control bit for the PTMn output pin. Its operation depends upon whether PTMn is being used in the Compare Match Output Mode or in the PWM Output Mode/Single Pulse Output Mode. It has no effect if the PTMn is in the Timer/Counter Mode. In the Compare Match Output Mode it determines the logic level of the PTMn output pin before a compare match occurs. In the PWM Output Mode it determines if the PWM signal is active high or active low. In the Single Pulse Output Mode it determines the logic level of the PTMn output pin when the PTnON bit changes from low to high.

Bit 2 **PTnPOL**: PTMn PTPn output polarity control
0: Non-inverted
1: Inverted

This bit controls the polarity of the PTPn output pin. When the bit is set high the PTMn output pin will be inverted and not inverted when the bit is zero. It has no effect if the PTMn is in the Timer/Counter Mode.

Bit 1 **PTnCAPTS**: PTMn capture trigger source selection
0: From PTPnI pin
1: From PTCKn pin

Bit 0 **PTnCCLR**: PTMn counter clear condition selection
0: Comparator P match
1: Comparator A match

This bit is used to select the method which clears the counter. Remember that the Periodic TM contains two comparators, Comparator A and Comparator P, either of which can be selected to clear the internal counter. With the PTnCCLR bit set high, the counter will be cleared when a compare match occurs from the Comparator A. When the bit is low, the counter will be cleared when a compare match occurs from the Comparator P or with a counter overflow. A counter overflow clearing method can only be implemented if the CCRP bits are all cleared to zero. The PTnCCLR bit is not used in the PWM Output, Single Pulse Output or Capture Input Mode.

- **PTMnDL Register (n=0~2)**

Bit	7	6	5	4	3	2	1	0
Name	D7	D6	D5	D4	D3	D2	D1	D0
R/W	R	R	R	R	R	R	R	R
POR	0	0	0	0	0	0	0	0

Bit 7~0 **D7~D0**: PTMn Counter Low Byte Register bit 7 ~ bit 0
PTMn 10-bit Counter bit 7 ~ bit 0

- **PTMnDH Register (n=0~2)**

Bit	7	6	5	4	3	2	1	0
Name	—	—	—	—	—	—	D9	D8
R/W	—	—	—	—	—	—	R	R
POR	—	—	—	—	—	—	0	0

Bit 7~2 Unimplemented, read as “0”

Bit 1~0 **D9~D8**: PTMn Counter High Byte Register bit 1 ~ bit 0
PTMn 10-bit Counter bit 9 ~ bit 8

• **PTMnAL Register (n=0~2)**

Bit	7	6	5	4	3	2	1	0
Name	D7	D6	D5	D4	D3	D2	D1	D0
R/W	R/W	R/W	R/W	R/W	R/W	R/W	R/W	R/W
POR	0	0	0	0	0	0	0	0

Bit 7~0 **D7~D0**: PTMn CCRA Low Byte Register bit 7 ~ bit 0
PTMn 10-bit CCRA bit 7 ~ bit 0

• **PTMnAH Register (n=0~2)**

Bit	7	6	5	4	3	2	1	0
Name	—	—	—	—	—	—	D9	D8
R/W	—	—	—	—	—	—	R/W	R/W
POR	—	—	—	—	—	—	0	0

Bit 7~2 Unimplemented, read as “0”

Bit 1~0 **D9~D8**: PTMn CCRA High Byte Register bit 1 ~ bit 0
PTMn 10-bit CCRA bit 9 ~ bit 8

• **PTMnRPL Register (n=0~2)**

Bit	7	6	5	4	3	2	1	0
Name	D7	D6	D5	D4	D3	D2	D1	D0
R/W	R/W	R/W	R/W	R/W	R/W	R/W	R/W	R/W
POR	0	0	0	0	0	0	0	0

Bit 7~0 **D7~D0**: PTMn CCRP Low Byte Register bit 7 ~ bit 0
PTMn 10-bit CCRP bit 7 ~ bit 0

PTMnRPH Register (n=0~2)

Bit	7	6	5	4	3	2	1	0
Name	—	—	—	—	—	—	D9	D8
R/W	—	—	—	—	—	—	R/W	R/W
POR	—	—	—	—	—	—	0	0

Bit 7~2 Unimplemented, read as “0”

Bit 1~0 **D9~D8**: PTMn CCRP High Byte Register bit 1 ~ bit 0
PTMn 10-bit CCRP bit 9 ~ bit 8

Periodic Type TM Operation Modes

The Periodic Type TM can operate in one of five operating modes, Compare Match Output Mode, PWM Output Mode, Single Pulse Output Mode, Capture Input Mode or Timer/Counter Mode. The operating mode is selected using the PTnM1 and PTnM0 bits in the PTMnC1 register.

Compare Match Output Mode

To select this mode, bits PTnM1 and PTnM0 in the PTMnC1 register, should be set to 00 respectively. In this mode once the counter is enabled and running it can be cleared by three methods. These are a counter overflow, a compare match from Comparator A and a compare match from Comparator P. When the PTnCCLR bit is low, there are two ways in which the counter can be cleared. One is when a compare match from Comparator P, the other is when the CCRP bits are all zero which allows the counter to overflow. Here both PTMnAF and PTMnPF interrupt request flags for Comparator A and Comparator P respectively, will both be generated.

If the PTnCCLR bit in the PTMnC1 register is high then the counter will be cleared when a compare match occurs from Comparator A. However, here only the PTMnAF interrupt request flag will be generated even if the value of the CCRP bits is less than that of the CCRA registers. Therefore when PTnCCLR is high no PTMnPF interrupt request flag will be generated. In the Compare Match Output Mode, the CCRA cannot be cleared to “0”.

If the CCRA bits are all zero, the counter will overflow when it reaches its maximum 10-bit, 3FF Hex, value, however here the PTMnAF interrupt request flag will not be generated.

As the name of the mode suggests, after a comparison is made, the PTMn output pin will change state. The PTMn output pin condition however only changes state when a PTMnAF interrupt request flag is generated after a compare match occurs from Comparator A. The PTMnPF interrupt request flag, generated from a compare match occurs from Comparator P, will have no effect on the PTMn output pin. The way in which the PTMn output pin changes state are determined by the condition of the PTnIO1 and PTnIO0 bits in the PTMnC1 register. The PTMn output pin can be selected using the PTnIO1 and PTnIO0 bits to go high, to go low or to toggle from its present condition when a compare match occurs from Comparator A. The initial condition of the PTMn output pin, which is setup after the PTnON bit changes from low to high, is setup using the PTnOC bit. Note that if the PTnIO1 and PTnIO0 bits are zero then no pin change will take place.

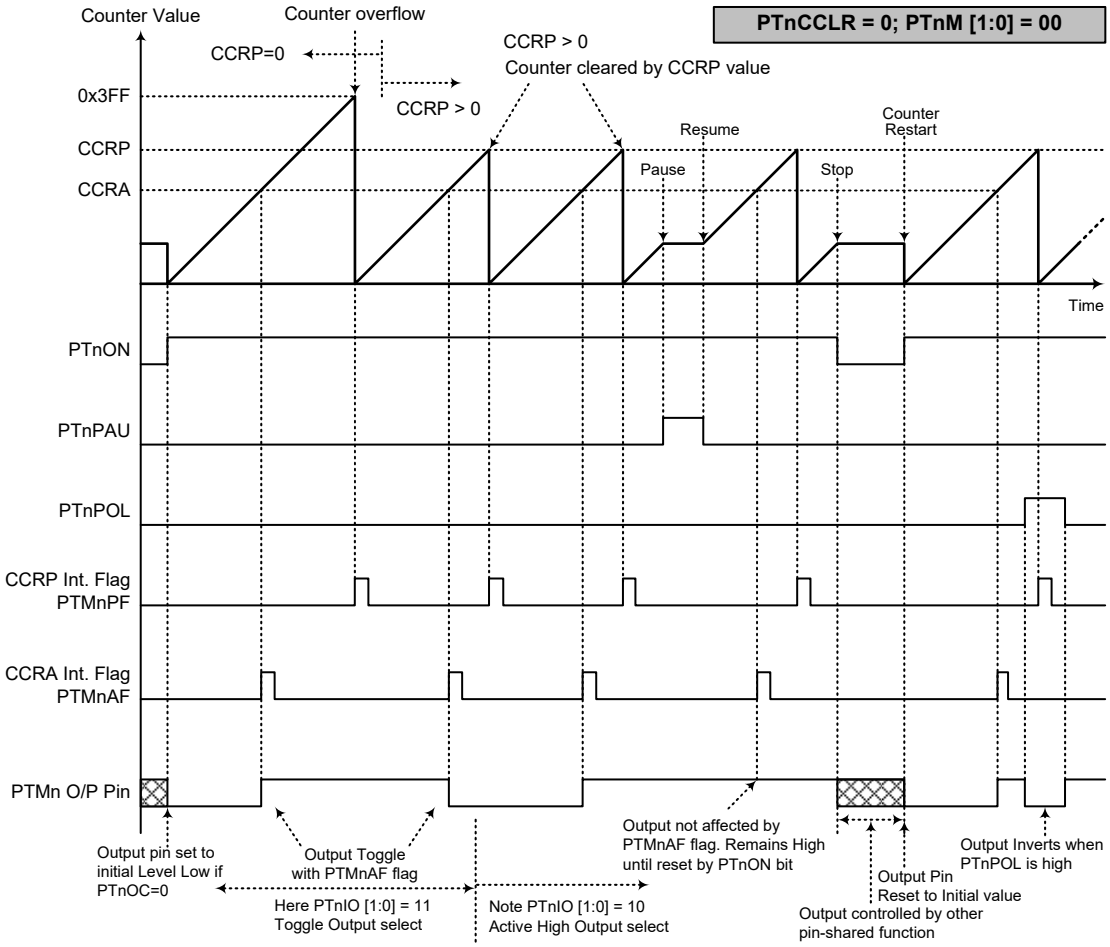

Compare Match Output Mode – PTnCCLR=0 (n=0~2)

Note: 1. With PTnCCLR=0, a Comparator P match will clear the counter
2. The PTMn output pin is controlled only by the PTMnAF flag
3. The output pin is reset to its initial state by a PTnON bit rising edge

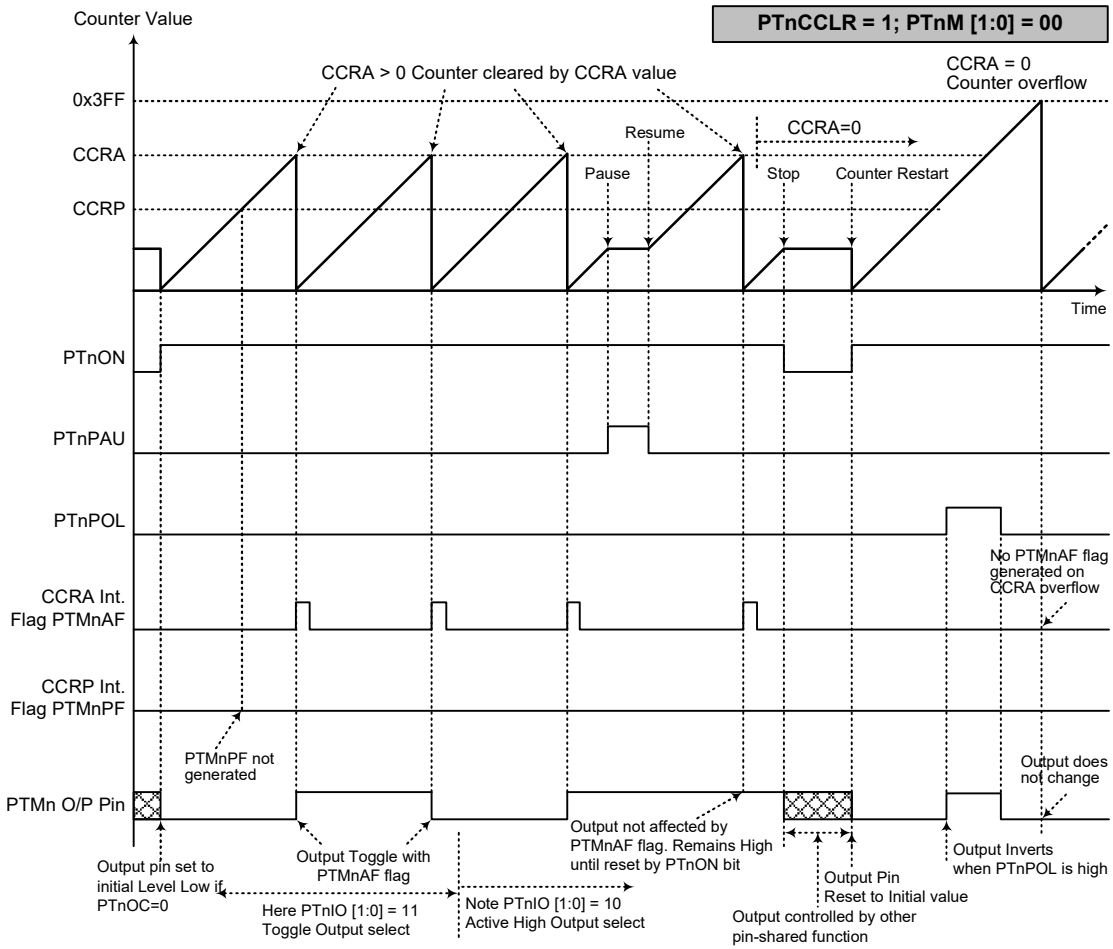

Compare Match Output Mode – PTnCCLR=1 (n=0~2)

Note: 1. With PTnCCLR=1, a Comparator A match will clear the counter
2. The PTMn output pin is controlled only by the PTMnAF flag
3. The output pin is reset to its initial state by a PTnON bit rising edge
4. A PTMnPF flag is not generated when PTnCCLR=1

Timer/Counter Mode

To select this mode, bits PTnM1 and PTnM0 in the PTMnC1 register should be set to 11 respectively. The Timer/Counter Mode operates in an identical way to the Compare Match Output Mode generating the same interrupt flags. The exception is that in the Timer/Counter Mode the PTMn output pin is not used. Therefore the above description and Timing Diagrams for the Compare Match Output Mode can be used to understand its function. As the PTMn output pin is not used in this mode, the pin can be used as a normal I/O pin or other pin-shared function.

PWM Output Mode

To select this mode, bits PTnM1 and PTnM0 in the PTMnC1 register should be set to 10 respectively. The PWM function within the PTMn is useful for applications which require functions such as motor control, heating control, illumination control, etc. By providing a signal of fixed frequency but of varying duty cycle on the PTMn output pin, a square wave AC waveform can be generated with varying equivalent DC RMS values.

As both the period and duty cycle of the PWM waveform can be controlled, the choice of generated waveform is extremely flexible. In the PWM Output Mode, the PTnCCLR bit has no effect as the PWM period. Both of the CCRP and CCRA registers are used to generate the PWM waveform, the CCRP register is used to clear the internal counter and thus control the PWM waveform frequency, while the CCRA register is used to control the duty cycle. The PWM waveform frequency and duty cycle can therefore be controlled by the values in the CCRA and CCRP registers.

An interrupt flag, one for each of the CCRA and CCRP, will be generated when a compare match occurs from either Comparator A or Comparator P. The PTnOC bit in the PTMnC1 register is used to select the required polarity of the PWM waveform while the two PTnIO1 and PTnIO0 bits are used to enable the PWM output or to force the PTMn output pin to a fixed high or low level. The PTnPOL bit is used to reverse the polarity of the PWM output waveform.

- **10-bit PTMn, PWM Output Mode, Edge-aligned Mode**

CCRP	1~1023	0
Period	1~1023	1024
Duty	CCRA	

If f_{SYS}=16MHz, PTMn clock source select $f_{SYS}/4$, CCRP=512 and CCRA=128,

The PTMn PWM output frequency=($f_{SYS}/4$)/512=$f_{SYS}/2048$=8kHz, duty=128/512=25%,

If the Duty value defined by the CCRA register is equal to or greater than the Period value, then the PWM output duty is 100%.

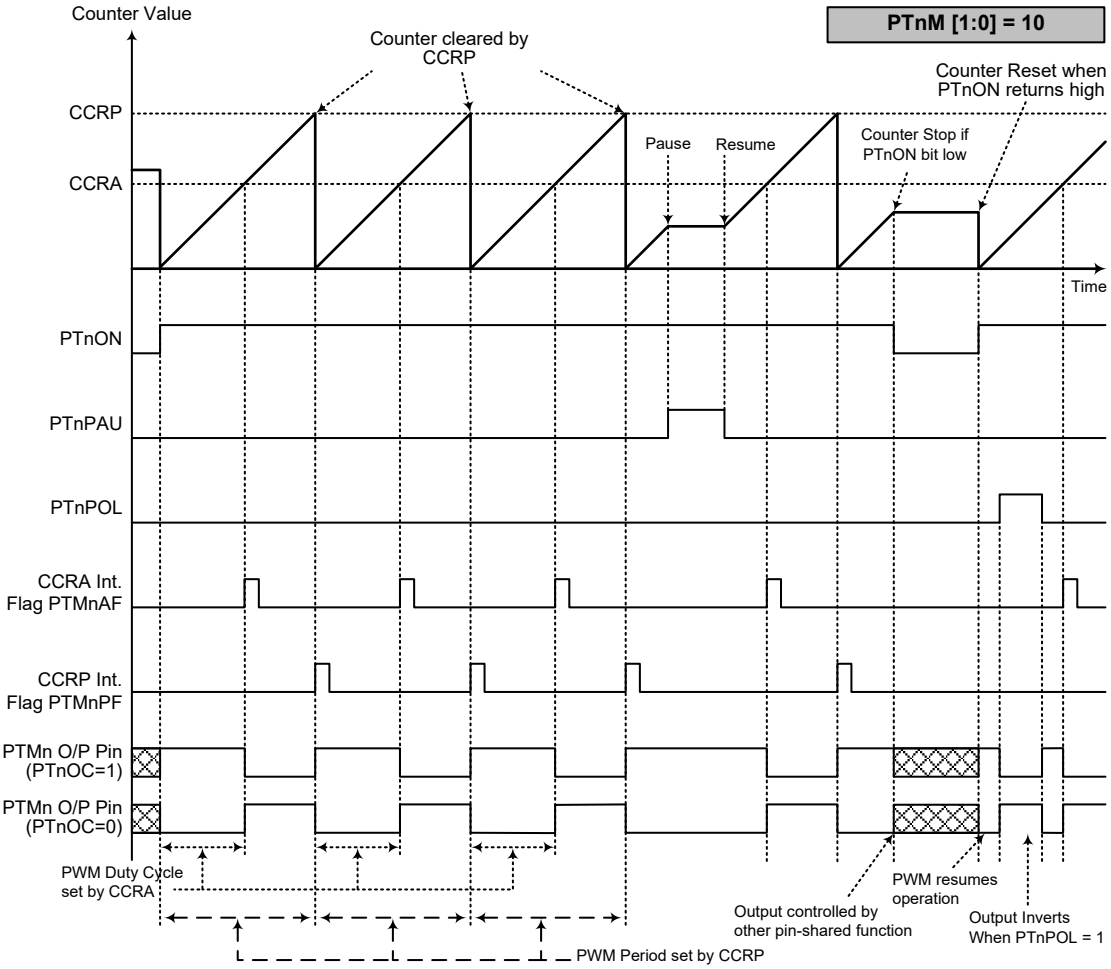

PWM Output Mode (n=0~2)

Note: 1. The counter is cleared by CCRP
2. A counter clear sets the PWM Period
3. The internal PWM function continues running even when PTnIO[1:0]=00 or 01
4. The PTnCCLR bit has no influence on PWM operation

Single Pulse Output Mode

To select this mode, bits PTnM1 and PTnM0 in the PTMnC1 register should be set to 10 respectively and also the PTnIO1 and PTnIO0 bits should be set to 11 respectively. The Single Pulse Output Mode, as the name suggests, will generate a single shot pulse on the PTMn output pin.

The trigger for the pulse output leading edge is a low to high transition of the PTnON bit, which can be implemented using the application program. However in the Single Pulse Output Mode, the PTnON bit can also be made to automatically change from low to high using the external PTCKn pin, which will in turn initiate the Single Pulse output. When the PTnON bit transitions to a high level, the counter will start running and the pulse leading edge will be generated. The PTnON bit should remain high when the pulse is in its active state. The generated pulse trailing edge will be generated when the PTnON bit is cleared to zero, which can be implemented using the application program or when a compare match occurs from Comparator A.

However a compare match from Comparator A will also automatically clear the PTnON bit and thus generate the Single Pulse output trailing edge. In this way the CCRA value can be used to control the pulse width. A compare match from Comparator A will also generate a PTMn interrupt. The counter can only be reset back to zero when the PTnON bit changes from low to high when the counter restarts. In the Single Pulse Output Mode CCRP is not used. The PTnCCLR is not used in this Mode.

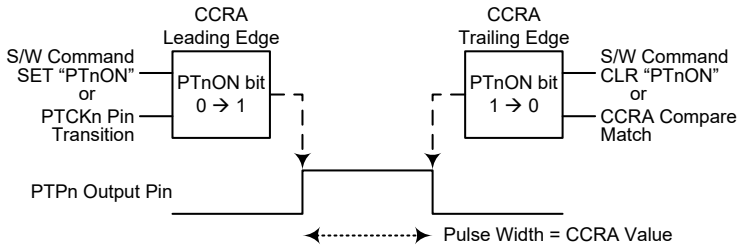

Single Pulse Generation (n=0~2)

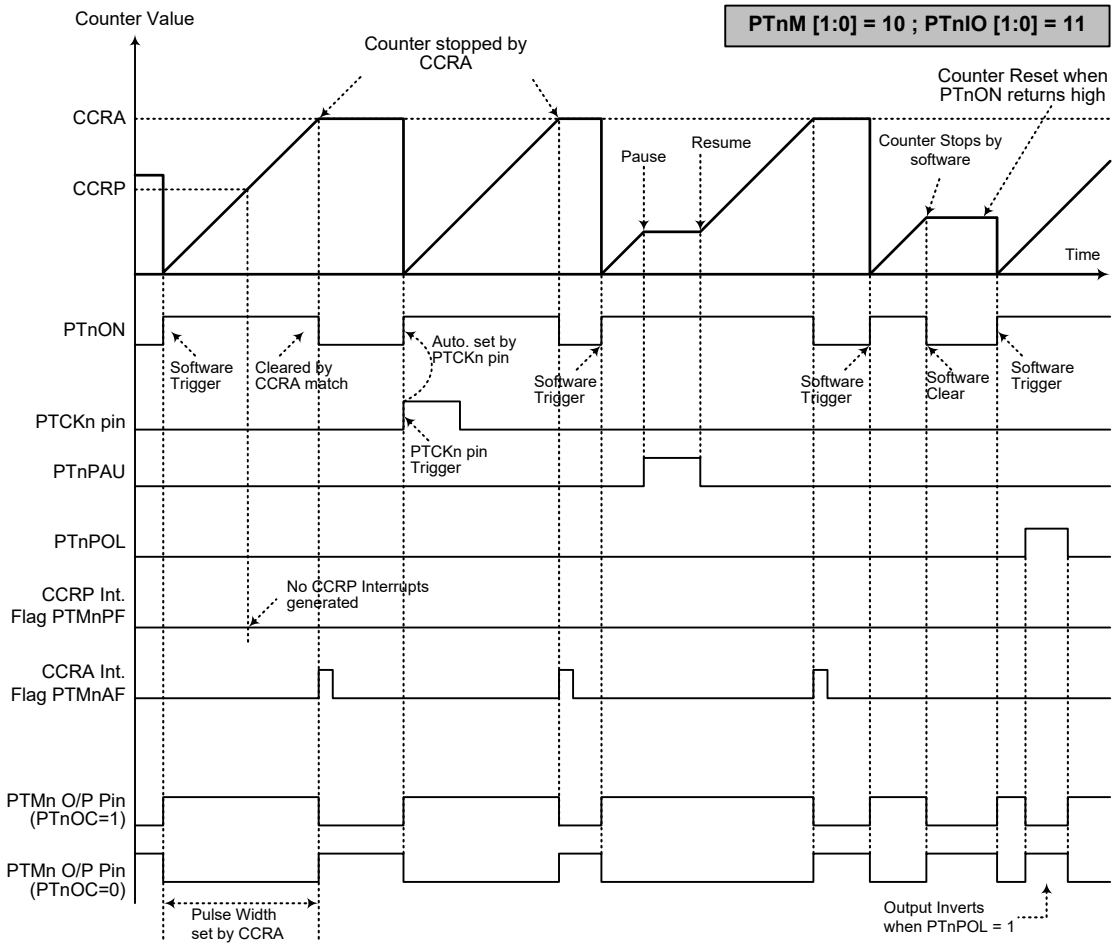

Single Pulse Output Mode (n=0~2)

Note: 1. Counter stopped by CCRA
2. CCRP is not used
3. The pulse triggered by the PTCKn pin or by setting the PTnON bit high
4. A PTCKn pin active edge will automatically set the PTnON bit high
5. In the Single Pulse Output Mode, PTnIO[1:0] must be set to “11” and cannot be changed

Capture Input Mode

To select this mode bits PTnM1 and PTnM0 in the PTMnC1 register should be set to 01 respectively. This mode enables external signals to capture and store the present value of the internal counter and can therefore be used for applications such as pulse width measurements. The external signal is supplied on the PTPnI or PTCKn pin, selected by the PTnCAPTS bit in the PTMnC1 register. The input pin active edge can be either a rising edge, a falling edge or both rising and falling edges; the active edge transition type is selected using the PTnIO1 and PTnIO0 bits in the PTMnC1 register. The counter is started when the PTnON bit changes from low to high which is initiated using the application program.

When the required edge transition appears on the PTPnI or PTCKn pin the present value in the counter will be latched into the CCRA registers and a PTMn interrupt generated. Irrespective of what events occur on the PTPnI or PTCKn pin the counter will continue to free run until the PTnON bit changes from high to low. When a CCRP compare match occurs the counter will reset back to zero; in this way the CCRP value can be used to control the maximum counter value. When a CCRP compare match occurs from Comparator P, a PTMn interrupt will also be generated. Counting the number of overflow interrupt signals from the CCRP can be a useful method in measuring long pulse widths. The PTnIO1 and PTnIO0 bits can select the active trigger edge on the PTPnI or PTCKn pin to be a rising edge, falling edge or both edge types. If the PTnIO1 and PTnIO0 bits are both set high, then no capture operation will take place irrespective of what happens on the PTPnI or PTCKn pin, however it must be noted that the counter will continue to run.

There are some considerations that should be noted. If PTCKn is used as the capture input source, then it cannot be selected as the PTMn clock source. If the captured pulse width is less than 2 timer clock periods, it may be ignored by hardware. After the counter value is latched to the CCRA registers by an active capture edge, the PTMnAF flag will be set high after 0.5 timer clock periods. The delay time from the active capture edge received to the action of latching counter value to CCRA registers is less than 1.5 timer clock periods.

The PTnCCLR, PTnOC and PTnPOL bits are not used in this Mode.

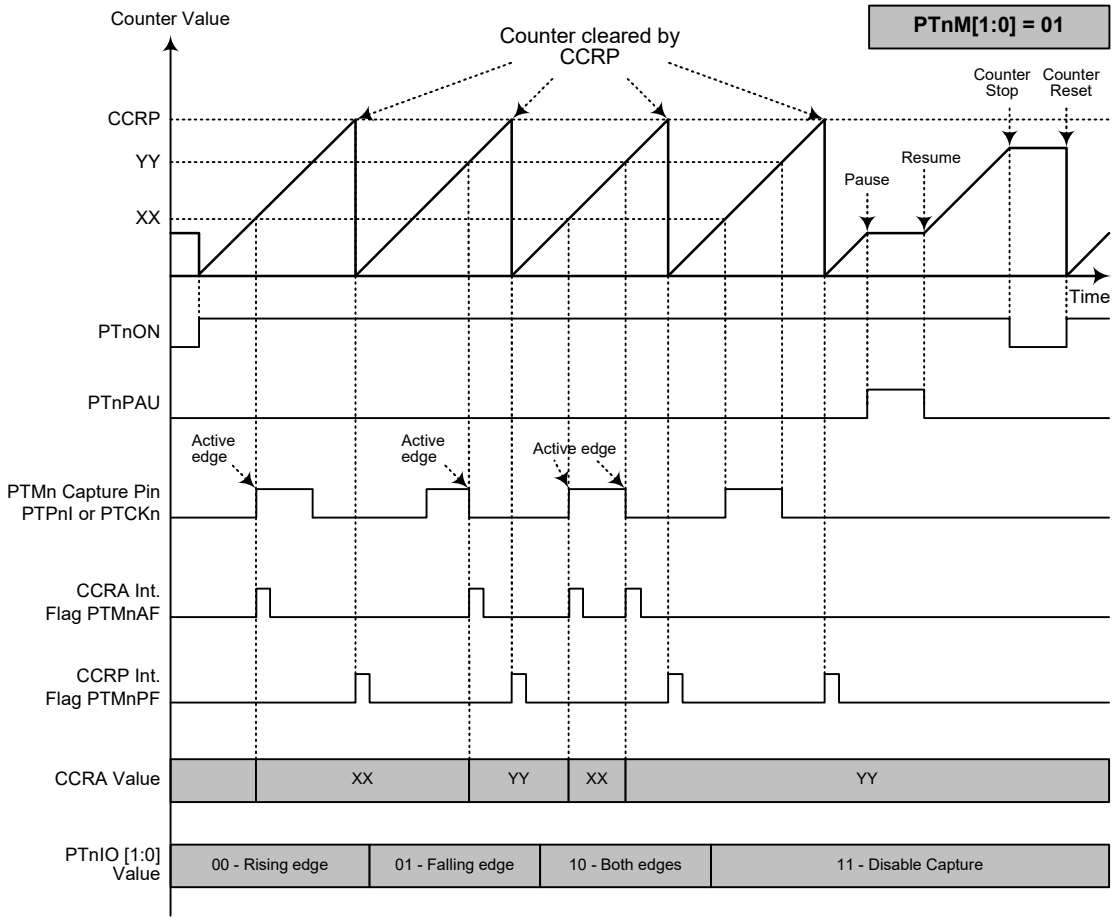

Capture Input Mode (n=0~2)

Note: 1. PTnM[1:0]=01 and active edge set by the PTnIO[1:0] bits
2. A PTMn Capture input pin active edge transfers the counter value to CCRA
3. PTnCCLR bit not used
4. No output function – PTnOC and PTnPOL bits are not used
5. CCRP determines the counter value and the counter has a maximum count value when CCRP is equal to zero
6. The capture input mode cannot be used if the selected PTMn counter clock is not available

Audio Type TM – ATM (BH67F5275)

The Audio Type TM contains three operating modes which are Compare Match Output, Timer/Event Counter and PWM Output modes. Here the PWM Output mode contains two sub-modes, namely Normal PWM Output mode and Audio PWM Output mode. The Audio type TM can also be controlled with an external input pin and can drive one or more external output pins. These output signals can be the same signal or the inverse signals. When the Audio PWM Output mode is enabled, the Audio PWM outputs will be generated on the ATP_PWM1 and ATP_PWM2 pins and can be used to drive speakers directly.

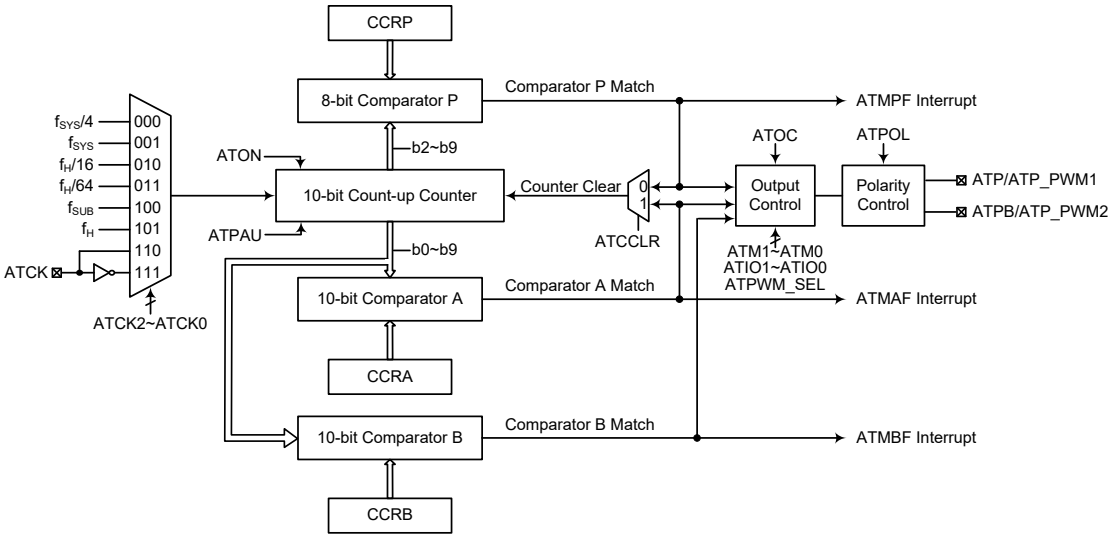

Note: 1. The ATM external pins are pin-shared with other functions, therefore before using the ATM function, the pin-shared function registers must be set properly to enable the ATM pin function. The ATCK pin, if used, must also be set as an input by setting the corresponding bits in the port control register.

2. Only in the Audio PWM Output mode, the ATP_PWM1 and ATP_PWM2 pin functions are used. In other ATM modes including Compare match output mode and Normal PWM Output mode, the pins are used as ATP and ATPB functions. The ATPB is inverted signal of the ATP output.

10-bit Audio Type TM Block Diagram

Audio Type TM Operation

The size of Audio Type TM is 10-bit wide and its core is a 10-bit count-up counter which is driven by a user selectable internal or external clock source. There are also three internal comparators with the names, Comparator A, Comparator B and Comparator P. These comparators will compare the value in the counter with the CCRA, CCRB and CCRP registers. The CCRP comparator is 8-bit wide whose value is compared with the highest 8 bits in the counter while the CCRA and CCRB comparators are 10-bit wide and therefore compared with all counter bits.

The only way of changing the value of the 10-bit counter using the application program, is to clear the counter by changing the ATON bit from low to high. The counter will also be cleared automatically by a counter overflow or a compare match with one of its associated comparators. When these conditions occur, an ATM interrupt signal will also usually be generated. The Audio Type TM can operate in a number of different operational modes, can be driven by different clock sources including an input pin and can also control one or more output pins. All operating setup conditions are selected using relevant internal registers.

Audio Type TM Register Description

Overall operation of the Audio Type TM is controlled using a series of registers. A read only register pair exists to store the internal counter 10-bit value, while two read/write register pairs exist to store the internal 10-bit CCRA and CCRB values. The ATMRP register is used to store the 8-bit CCRP value. The remaining two registers are control registers which setup the different operating and control modes.

Register Name	Bit							
	7	6	5	4	3	2	1	0
ATMC0	ATPAU	ATCK2	ATCK1	ATCK0	ATON	—	—	ATPWM_SEL
ATMC1	ATM1	ATM0	ATIO1	ATIO0	ATOC	ATPOL	ATDPX	ATCCLR
ATMDL	D7	D6	D5	D4	D3	D2	D1	D0
ATMDH	—	—	—	—	—	—	D9	D8
ATMAL	D7	D6	D5	D4	D3	D2	D1	D0
ATMAH	—	—	—	—	—	—	D9	D8
ATMBL	D7	D6	D5	D4	D3	D2	D1	D0
ATMBH	—	—	—	—	—	—	D9	D8
ATMRP	ATRP7	ATRP6	ATRP5	ATRP4	ATRP3	ATRP2	ATRP1	ATRP0

10-bit Audio Type TM Register List

• ATMC0 Register

Bit	7	6	5	4	3	2	1	0
Name	ATPAU	ATCK2	ATCK1	ATCK0	ATON	—	—	ATPWM_SEL
R/W	R/W	R/W	R/W	R/W	R/W	—	—	R/W
POR	0	0	0	0	0	—	—	0

Bit 7 **ATPAU**: ATM counter pause control
0: Run
1: Pause

The counter can be paused by setting this bit high. Clearing the bit to zero restores normal counter operation. When in a Pause condition the ATM will remain powered up and continue to consume power. The counter will retain its residual value when this bit changes from low to high and resume counting from this value when the bit changes to a low value again.

Bit 6~4 **ATCK2~ATCK0**: ATM counter clock selection
000: $f_{SYS}/4$
001: f_{SYS}
010: $f_H/16$
011: $f_H/64$
100: f_{SUB}
101: f_H
110: ATCK rising edge clock
111: ATCK falling edge clock

These three bits are used to select the clock source for the ATM. The external pin clock source can be chosen to be active on the rising or falling edge. The clock source f_{SYS} is the system clock, while f_H and f_{SUB} are other internal clocks, the details of which can be found in the “Operating Modes and System Clocks” section.

Bit 3 **ATON**: ATM counter on/off control
0: Off
1: On

This bit controls the overall on/off function of the ATM. Setting the bit high enables the counter to run while clearing the bit disables the ATM. Clearing this bit to zero will stop the counter from counting and turn off the ATM which will reduce its power

consumption. When the bit changes state from low to high the internal counter value will be reset to zero, however when the bit changes from high to low, the internal counter will retain its residual value. If the ATM is in the Compare Match Output Mode or the PWM Output Mode then the ATM output pin will be reset to its initial condition as specified by the ATOC bit, when the ATON bit changes from low to high.

Bit 2~1 Unimplemented, read as "0"

Bit 0 **ATPWM_SEL**: ATM PWM output mode selection
0: Normal PWM Output Mode
1: Audio PWM Output Mode

This bit controls the PWM Output Mode selection. When the PWM output mode has been selected using the relevant bits in the ATMC1 register, then setting this bit high will switch the ATM operation from Normal PWM Output mode to the Audio PWM Output mode.

• ATMC1 Register

Bit	7	6	5	4	3	2	1	0
Name	ATM1	ATM0	ATIO1	ATIO0	ATOC	ATPOL	ATDPX	ATCCLR
R/W	R/W	R/W	R/W	R/W	R/W	R/W	R/W	R/W
POR	0	0	0	0	0	0	0	0

Bit 7~6 **ATM1~ATM0**: ATM operating mode selection
00: Compare Match Output Mode
01: Undefined
10: PWM Output Mode
11: Timer/Counter Mode

These bits setup the required operating mode for the ATM. To ensure reliable operation the ATM should be switched off before any changes are made to the ATM1 and ATM0 bits. In the Timer/Counter Mode, the ATM output pin state is undefined.

Bit 5~4 **ATIO1~ATIO0**: ATM external pin function selection
Compare Match Output Mode
00: No change
01: Output low
10: Output high
11: Toggle output
PWM Output Mode
00: PWM output inactive state
01: PWM output active state
10: PWM output
11: Undefined
Timer/Counter Mode
Unused

These two bits are used to determine how the ATM external pin changes state when a certain condition is reached. The function that these bits select depends upon the mode in which the ATM is running.

In the Compare Match Output Mode, the ATIO1 and ATIO0 bits determine how the ATM output pin changes state when a compare match occurs from Comparator A. The ATM output pin can be setup to switch high, switch low or to toggle its present state when a compare match occurs from Comparator A. When the bits are both zero, then no change will take place on the output. The initial value of the ATM output pin should be setup using the ATOC bit in the ATMC1 register. Note that the output level requested by the ATIO1 and ATIO0 bits must be different from the initial value setup using the ATOC bit otherwise no change will occur on the ATM output pin when a compare match occurs. After the ATM output pin changes state, it can be reset to its initial level by changing the level of the ATON bit from low to high.

In the PWM Output Mode, the ATIO1 and ATIO0 bits determine how the ATM output pin changes state when a certain compare match condition occurs. The PWM output function is modified by changing these two bits. It is necessary to only change the values of the ATIO1 and ATIO0 bits only after the ATM has been switched off. Unpredictable PWM outputs will occur if the ATIO1 and ATIO0 bits are changed when the ATM is running.

Bit 3 **ATOC**: ATM output pin control

Compare Match Output Mode
0: Initial low
1: Initial high

PWM Output Mode
0: Active low
1: Active high

This is the output control bit for the ATM output pins. Its operation depends upon whether the ATM is being used in the Compare Match Output Mode or in the PWM Output Mode. It has no effect if the ATM is in the Timer/Counter Mode. In the Compare Match Output Mode it determines the logic level of the ATP output pin before a compare match occurs. In the PWM Output Mode it determines if the PWM signal is active high or active low.

Bit 2 **ATPOL**: ATM output polarity control
0: Non-invert
1: Invert

This bit controls the polarity of the ATM output. When the bit is set high the ATM output pin will be inverted and not inverted when the bit is zero. It has no effect if the ATM is in the Timer/Counter Mode.

Bit 1 **ATDPX**: ATM PWM period/duty control
0: CCRP – period; CCRA – duty
1: CCRP – duty; CCRA – period

This bit determines which register of the CCRA and CCRP is used to control either frequency or duty cycle of the PWM waveform in the Normal PWM Output Mode. However if the Audio PWM Output Mode is selected by setting the ATPWM_SEL bit high, the ATDPX bit will be cleared to zero by hardware which means that the period values of output waveforms on the ATP_PWM1 and ATP_PWM2 will be controlled by the CCRP while their duty cycle values are controlled by the CCRA and CCRB.

Bit 0 **ATCCLR**: ATM counter clear condition selection
0: Comparator P match
1: Comparator A match

This bit is used to select the method which clears the counter. Remember that the Audio TM contains two comparators, Comparator A and Comparator P, either of which can be selected to clear the internal counter. With the ATCCLR bit set high, the counter will be cleared when a compare match occurs from the Comparator A. When the bit is low, the counter will be cleared when a compare match occurs from the Comparator P or with a counter overflow. A counter overflow clearing method can only be implemented if the CCRP bits are all cleared to zero. The ATCCLR bit is not used in the PWM Output Mode.

• ATMDL Register

Bit	7	6	5	4	3	2	1	0
Name	D7	D6	D5	D4	D3	D2	D1	D0
R/W	R	R	R	R	R	R	R	R
POR	0	0	0	0	0	0	0	0

Bit 7~0 **D7~D0**: ATM Counter Low Byte Register bit 7 ~ bit 0
ATM 10-bit Counter bit 7 ~ bit 0

• **ATMDH Register**

Bit	7	6	5	4	3	2	1	0
Name	—	—	—	—	—	—	D9	D8
R/W	—	—	—	—	—	—	R	R
POR	—	—	—	—	—	—	0	0

Bit 7~2 Unimplemented, read as "0"

Bit 1~0 **D9~D8**: ATM Counter High Byte Register bit 1 ~ bit 0
ATM 10-bit Counter bit 9 ~ bit 8

• **ATMAL Register**

Bit	7	6	5	4	3	2	1	0
Name	D7	D6	D5	D4	D3	D2	D1	D0
R/W	R/W	R/W	R/W	R/W	R/W	R/W	R/W	R/W
POR	0	0	0	0	0	0	0	0

Bit 7~0 **D7~D0**: ATM CCRA Low Byte Register bit 7 ~ bit 0
ATM 10-bit CCRA bit 7 ~ bit 0

• **ATMAH Register**

Bit	7	6	5	4	3	2	1	0
Name	—	—	—	—	—	—	D9	D8
R/W	—	—	—	—	—	—	R/W	R/W
POR	—	—	—	—	—	—	0	0

Bit 7~2 Unimplemented, read as "0"

Bit 1~0 **D9~D8**: ATM CCRA High Byte Register bit 1 ~ bit 0
ATM 10-bit CCRA bit 9 ~ bit 8

• **ATMBL Register**

Bit	7	6	5	4	3	2	1	0
Name	D7	D6	D5	D4	D3	D2	D1	D0
R/W	R/W	R/W	R/W	R/W	R/W	R/W	R/W	R/W
POR	0	0	0	0	0	0	0	0

Bit 7~0 **D7~D0**: ATM CCRB Low Byte Register bit 7 ~ bit 0
ATM 10-bit CCRB bit 7 ~ bit 0

• **ATMBH Register**

Bit	7	6	5	4	3	2	1	0
Name	—	—	—	—	—	—	D9	D8
R/W	—	—	—	—	—	—	R/W	R/W
POR	—	—	—	—	—	—	0	0

Bit 7~2 Unimplemented, read as "0"

Bit 1~0 **D9~D8**: ATM CCRB High Byte Register bit 1 ~ bit 0
ATM 10-bit CCRB bit 9 ~ bit 8

• **ATMRP Register**

Bit	7	6	5	4	3	2	1	0
Name	ATRP7	ATRP6	ATRP5	ATRP4	ATRP3	ATRP2	ATRP1	ATRP0
R/W	R/W	R/W	R/W	R/W	R/W	R/W	R/W	R/W
POR	0	0	0	0	0	0	0	0

Bit 7~0 **ATRP7~ATRP0**: ATM CCRP 8-bit register, compared with the ATM Counter bit 9 ~ bit 2

Comparator P Match Period
0: 1024 ATM clocks
1~255: (1~255)×4 ATM clocks

These eight bits are used to setup the value on the internal CCRP 8-bit register, which are then compared with the internal counter's highest eight bits. The result of this comparison can be selected to clear the internal counter if the ATCCLR bit is cleared to zero. Setting the ATCCLR bit to zero ensures that a compare match with the CCRP values will reset the internal counter. As the CCRP bits are only compared with the highest eight counter bits, the compare values exist in 4 clock cycle multiples. Clearing all eight bits to zero is in effect allowing the counter to overflow at its maximum value.

Audio Type TM Operation Modes

The Audio Type TM can operate in one of three operating modes, Compare Match Output Mode, Timer/Counter Mode and PWM Output Mode. The operating mode is selected using the ATM1 and ATM0 bits in the ATMC1 register.

Compare Match Output Mode

To select this mode, bits ATM1 and ATM0 in the ATMC1 register, should be set to 00. In this mode once the counter is enabled and running it can be cleared by three methods. These are a counter overflow, a compare match from Comparator A and a compare match from Comparator P. When the ATCCLR bit is low, there are two ways in which the counter can be cleared. One is when a compare match from Comparator P, the other is when the CCRP bits are all zero which allows the counter to overflow. Here both ATMAF and ATMPF interrupt request flags for Comparator A and Comparator P respectively, will both be generated.

If the ATCCLR bit in the ATMC1 register is high then the counter will be cleared when a compare match occurs from Comparator A. However, here only the ATMAF interrupt request flag will be generated even if the value of the CCRP bits is less than that of the CCRA registers. Therefore when ATCCLR is high no ATMPF interrupt request flag will be generated. If the CCRA bits are all zero, the counter will overflow when it reaches its maximum 10-bit, 3FF Hex, value, however here the ATMAF interrupt request flag will not be generated.

As the name of the mode suggests, after a comparison is made, the ATM output pin will change state. The ATM output pin condition however only changes state when an ATMAF interrupt request flag is generated after a compare match occurs from Comparator A. The ATMPF interrupt request flag, generated from a compare match with Comparator P, will have no effect on the ATM output pin. The way in which the ATM output pin changes state are determined by the condition of the ATIO1 and ATIO0 bits in the ATMC1 register. The ATM output pin can be selected using the ATIO1 and ATIO0 bits to go high, to go low or to toggle from its present condition when a compare match occurs from Comparator A. The initial condition of the ATM output pin, which is setup after the ATON bit changes from low to high, is setup using the ATOC bit. Note that if the ATIO1 and ATIO0 bits are zero then no pin change will take place.

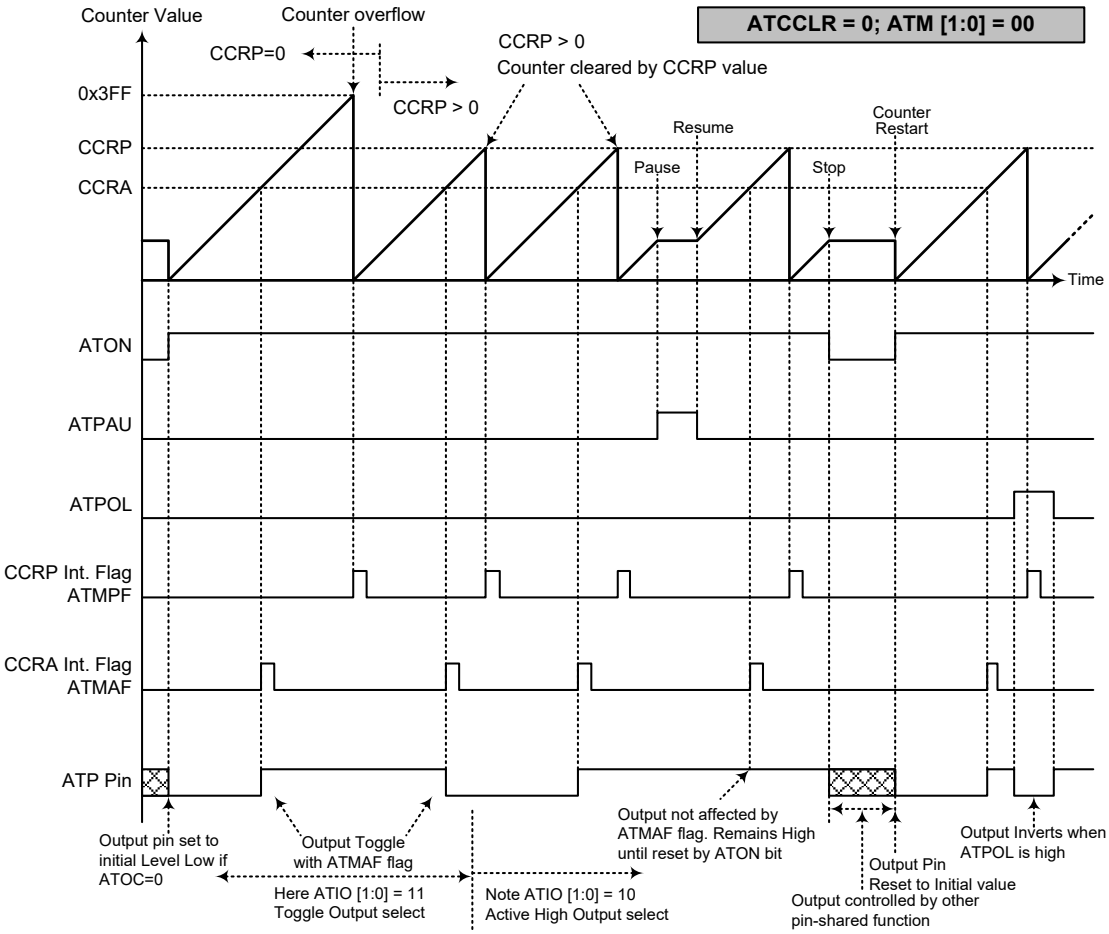

Compare Match Output Mode – ATCCLR=0

Note: 1. With ATCCLR=0, a Comparator P match will clear the counter
2. The ATM output pin is controlled only by the ATMAF flag
3. The output pin is reset to its initial state by an ATON bit rising edge

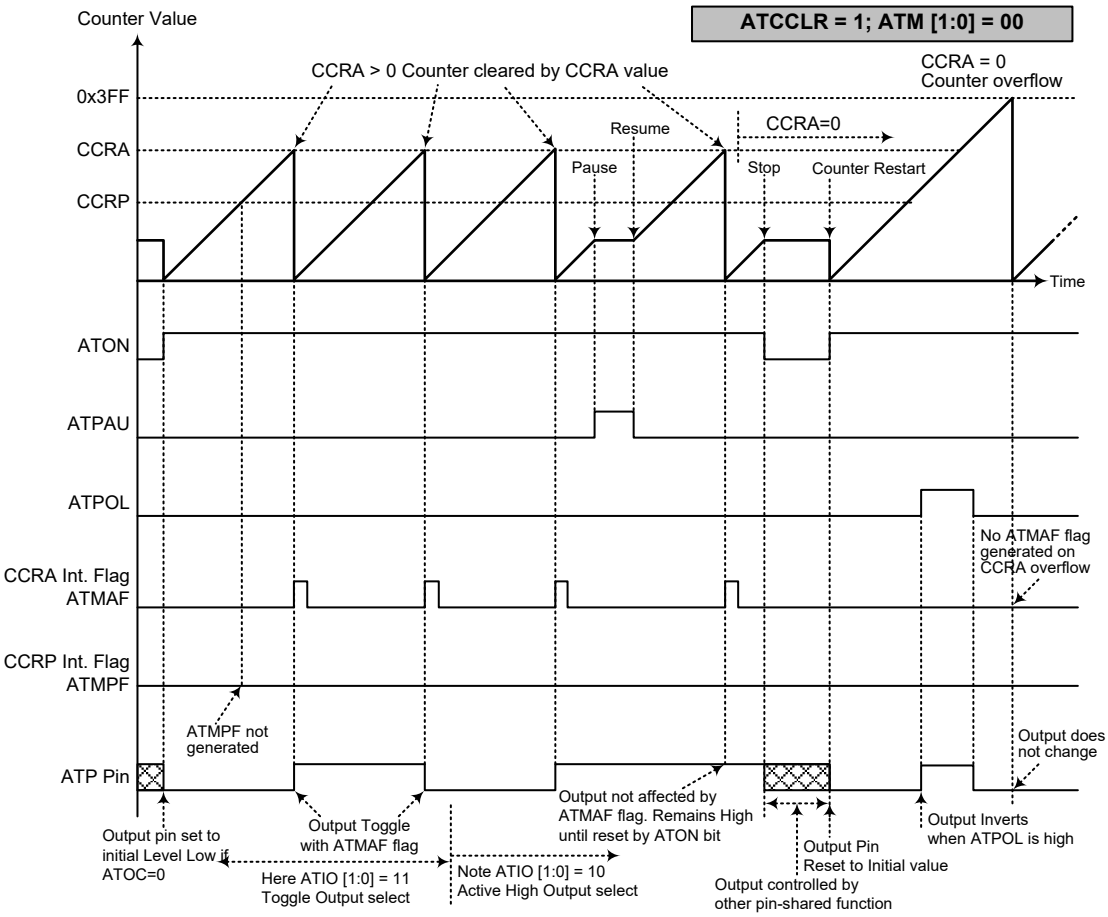

Compare Match Output Mode – ATCCLR=1

Note: 1. With ATCCLR=1, a Comparator A match will clear the counter
2. The ATM output pin is controlled only by the ATMAF flag
3. The output pin is reset to its initial state by an ATON bit rising edge
4. The ATMPF flag is not generated when ATCCLR=1

Timer/Counter Mode

To select this mode, bits ATM1 and ATM0 in the ATMC1 register should be set to 11. The Timer/Counter Mode operates in an identical way to the Compare Match Output Mode generating the same interrupt flags. The exception is that in the Timer/Counter Mode the ATM output pin is not used. Therefore, the above description and Timing Diagrams for the Compare Match Output Mode can be used to understand its function. As the ATM output pin is not used in this mode, the pin can be used as a normal I/O pin or other pin-shared function.

PWM Output Mode

To select this mode, bits ATM1 and ATM0 in the ATMC1 register should first be set to 10. The PWM function within the ATM is useful for applications which require functions such as a speaker driver, motor control, heating control, illumination control, etc. By providing a signal of fixed frequency but of varying duty cycle on the ATM output pin, a square wave AC waveform can be generated with varying equivalent DC RMS values. As both the period and duty cycle of the PWM waveform can be controlled, the choice of generated waveform is extremely flexible. In the PWM output mode, the ATCCLR bit has no effect on the PWM operation.

For this device, the PWM output can operate in two modes which are Normal PWM Output Mode and Audio PWM Output Mode and are selected using the ATPWM_SEL bit in the ATMC0 register. The control bits and differences between the Normal PWM Output Mode and Audio PWM Output Mode are summarised in the accompanying table.

Item	Normal PWM Output Mode	Audio PWM Output Mode
ATPWM_SEL Bit	0	1
ATM CCRB Interrupt	×	√
Output Pins	ATP, ATPB	ATP_PWM1, ATP_PWM2
PWM Output Control	ATIO1~ATIO0 bits	
Output Active Level	ATOC bit	
Output Polarity Control	ATPOL bit	
Period/Duty Control	ATDPX bit	ATDPX bit is always 0. The Audio PWM period is controlled by CCRP.

Normal/Audio PWM Output Mode Comparison Table

Normal PWM Output Mode

In the Normal PWM Output Mode, both of the CCRP and CCRA registers are used to generate the PWM waveform, one register is used to clear the internal counter and thus control the PWM waveform frequency, while the other one is used to control the duty cycle. Which register is used to control either frequency or duty cycle is determined using the ATDPX bit in the ATMC1 register. The PWM waveform frequency and duty cycle can therefore be controlled by the values in the CCRA and CCRP registers.

If the defined Duty value is equal to or greater than the Period value, then the PWM output duty is undefined.

An interrupt flag, one for each of the CCRA and CCRP, will be generated when a compare match occurs from either Comparator A or Comparator P. The ATOC bit in the ATMC1 register is used to select the required polarity of the PWM waveform while the two ATIO1 and ATIO0 bits are used to enable the PWM output or to force the ATM output pin to a fixed high or low level. The ATPOL bit is used to reverse the polarity of the PWM output waveform.

• **10-bit ATM, Normal PWM Output Mode, Edge-aligned Mode, ATDPX=0**

CCRP	1~255	0
Period	CCRP×4	1024
Duty	CCRA	

If f_{SYS}=8MHz, ATM clock source is $f_{SYS}/4$, CCRP=64 and CCRA=64,

The ATM PWM output frequency=$(f_{SYS}/4)/(64\times4)=f_{SYS}/1024$=7.8125kHz, duty=64/(64×4)=25%

• **10-bit ATM, Normal PWM Output Mode, Edge-aligned Mode, ATDPX=1**

CCRP	1~255	0
Period	CCRA	
Duty	CCRP×4	1024

The PWM output period is determined by the CCRA register value together with the ATM clock while the PWM duty cycle is defined by the CCRP register value.

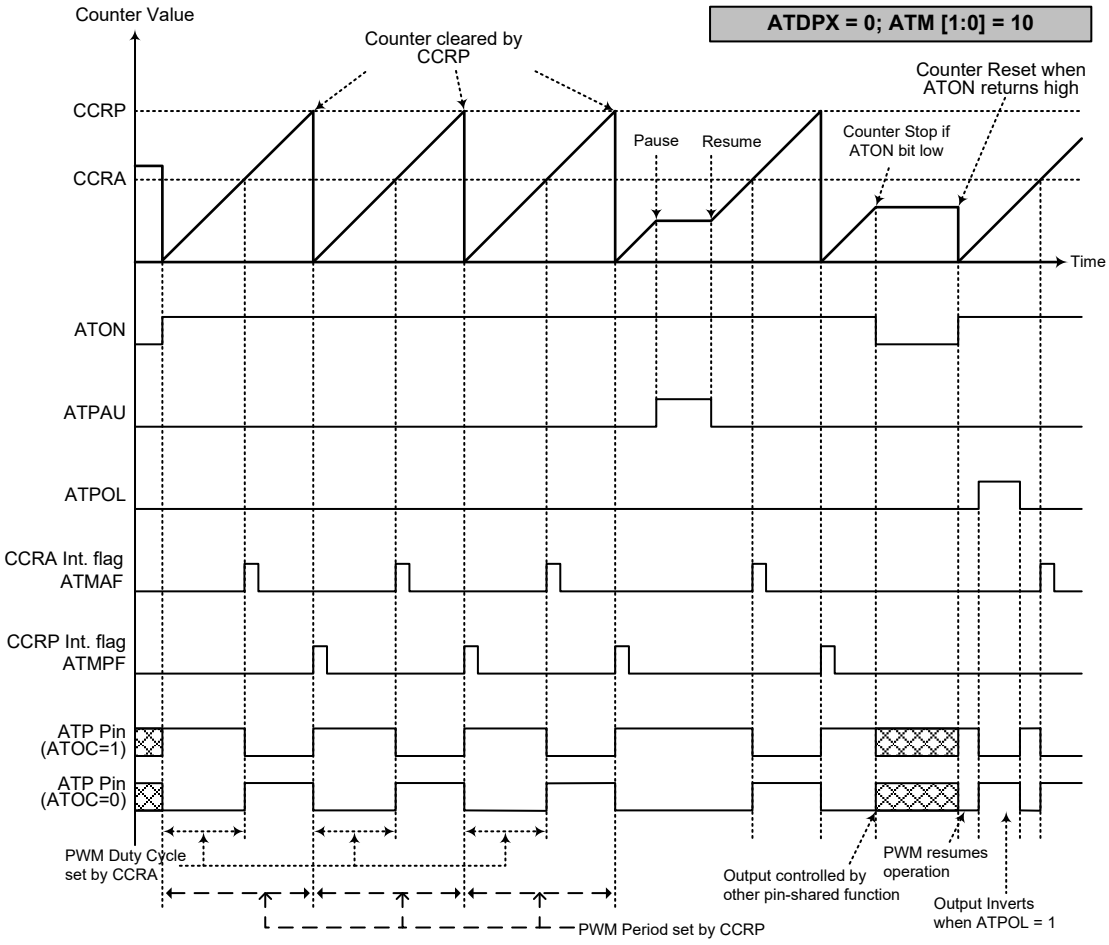

ATM Normal PWM Output Mode – ATDPX=0

Note: 1. Here ATM[1:0]=10, ATPWM_SEL=0 and ATDPX=0
2. The counter is cleared by CCRP
3. A counter clear sets the PWM Period
4. The internal PWM function continues running even when ATIO[1:0]=00 or 01
5. The ATCCLR bit has no influence on PWM operation

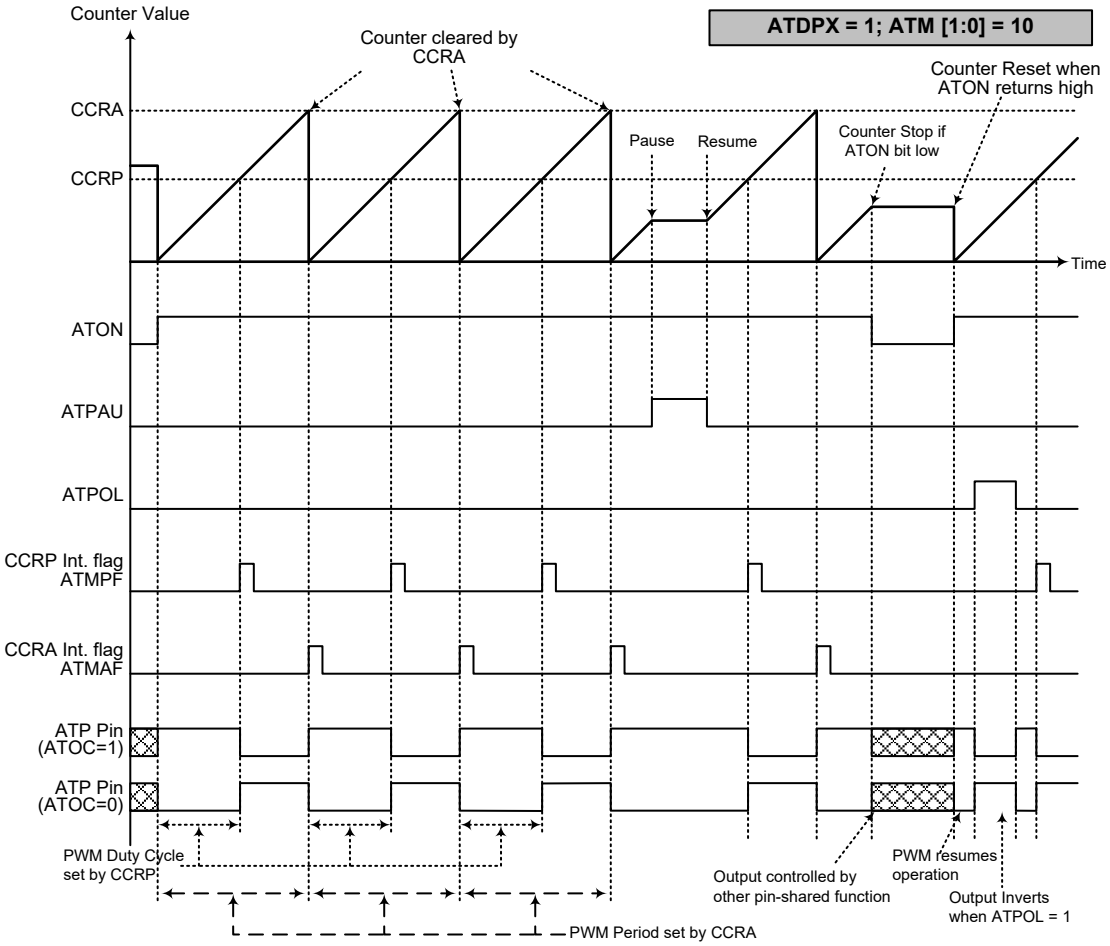

ATM Normal PWM Output Mode – ATDPX=1

Note: 1.Here ATM[1:0]=10, ATPWM_SEL=0 and ATDPX=1
2. The counter is cleared by CCRA
3. A counter clear sets the PWM Period
4. The internal PWM function continues running even when ATIO[1:0]=00 or 01
5. The ATCCLR bit has no influence on PWM operation

Audio PWM Output Mode

In the Audio PWM Output Mode, the CCRA, CCRB and CCRP registers are all used to generate the PWM waveforms on ATP_PWM1 and ATP_PWM2. The CCRP register is used to clear the internal counter and thus control the frequency of the two PWM outputs on the ATP_PWM1 and ATP_PWM2 pins, while the CCRA and CCRB registers are used to control the duty cycles of these two signals respectively.

An interrupt can be generated when a compare match occurs from either Comparator A, Comparator B or Comparator P. Except that the ATDPX bit is maintained at a zero value by hardware in the Audio PWM Output Mode, other control bits that control the ATP_PWM1 and ATP_PWM2 are the same as the Normal PWM Output mode.

Note that as in the Audio PWM Output Mode, the CCRP, CCRA and CCRB all have a shadow function, when writting a new data into the CCRA, CCRB or CCRP registers, the CCRA, CCRB or CCRP will not be updated immediately by hardware until the current CCRP counter overflows and an ATMPF interrupt flag is set.

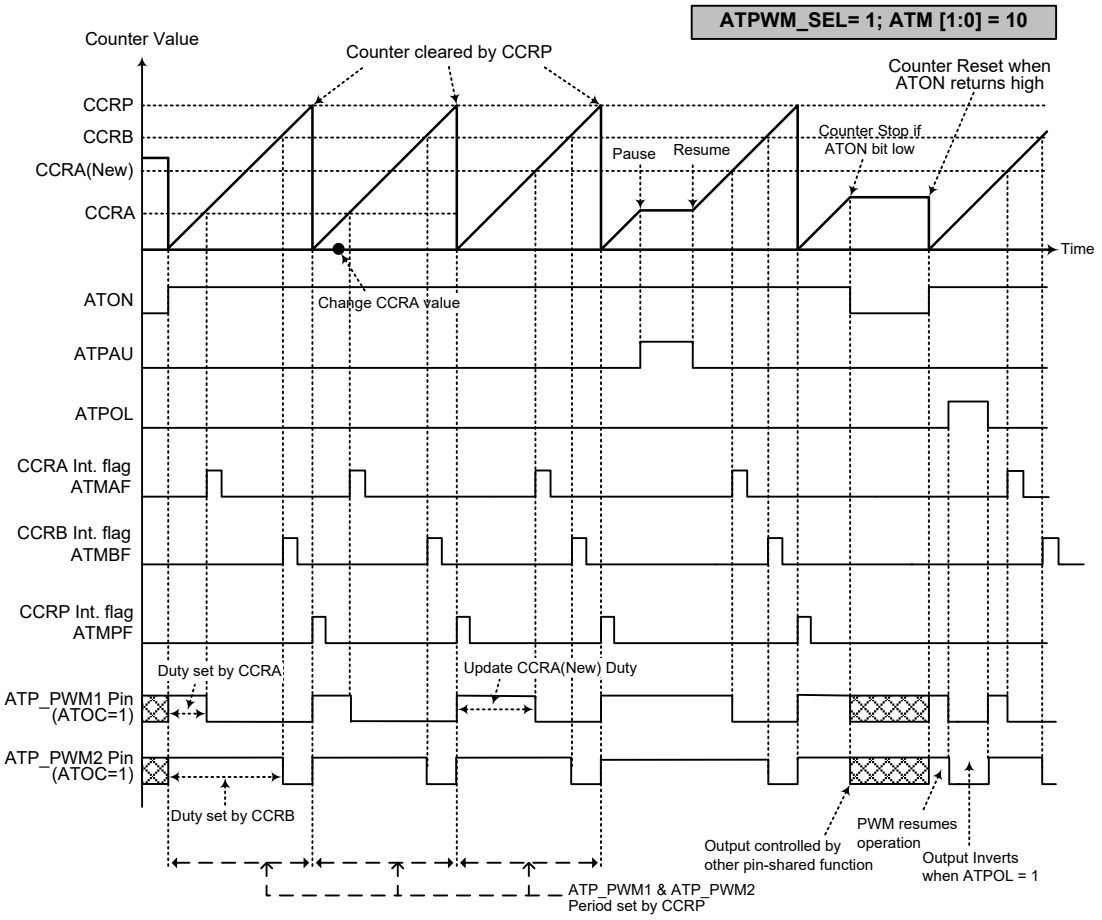

ATM Audio PWM Output Mode – Change CCRA Value

Note: 1. ATM[1:0]=10, ATPWM_SEL=1
2. The counter is cleared by CCRP
3. A counter clear sets the PWM Period
4. CCRA defines ATP_PWM1 duty while CCRB defines ATP_PWM2 duty
5. The internal PWM function continues running even when ATIO[1:0]=00 or 01
6. The ATCCLR bit has no influence on PWM operation, the ATDPX bit is kept at 0 by hardware

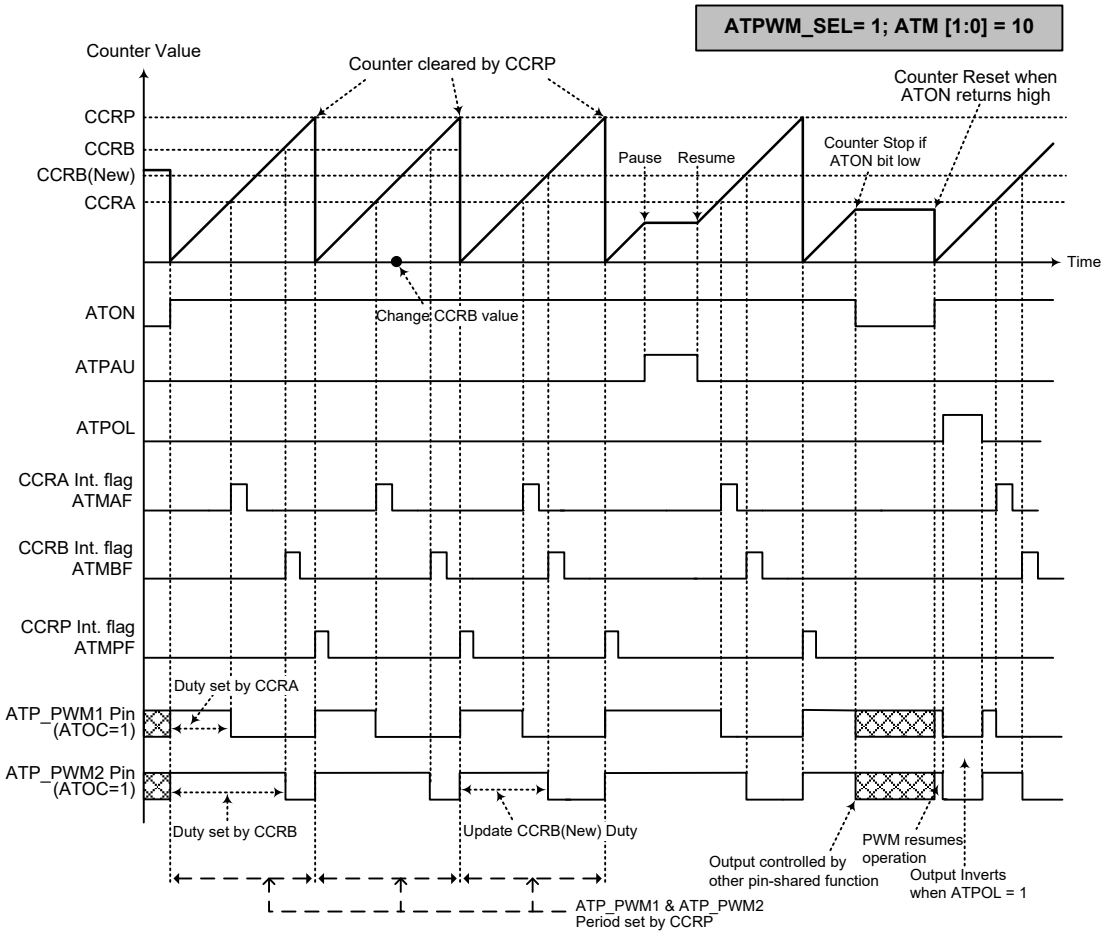

ATM Audio PWM Output Mode – Change CCRB Value

Note: 1. ATM[1:0]=10, ATPWM_SEL=1
2. The counter is cleared by CCRP
3. A counter clear sets the PWM Period
4. CCRA defines ATP_PWM1 duty while CCRB defines ATP_PWM2 duty
5. The internal PWM function continues running even when ATIO[1:0]=00 or 01
6. The ATCCLR bit has no influence on PWM operation, the ATDPX bit is kept at 0 by hardware

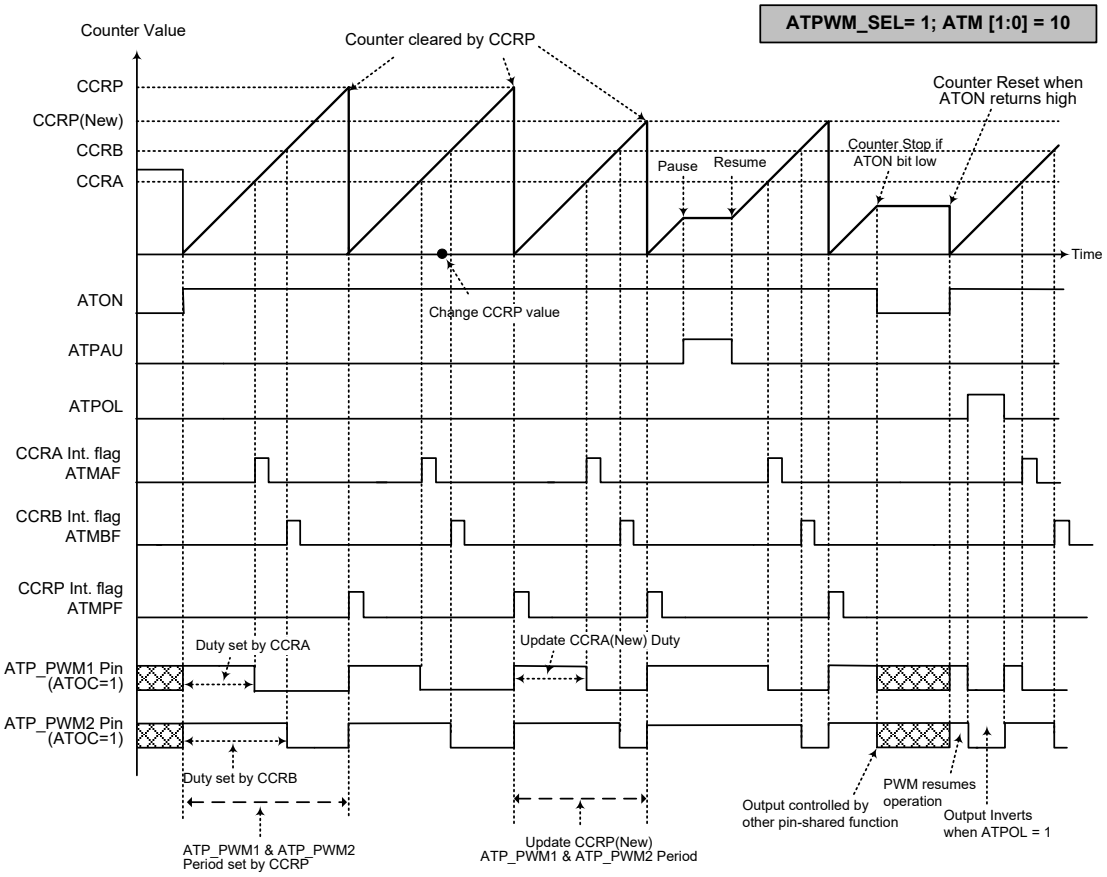

ATM Audio PWM Output Mode – Change CCRP Value

Note: 1. ATM[1:0]=10, ATPWM_SEL=1
2. The counter is cleared by CCRP
3. A counter clear sets the PWM Period
4. CCRA defines ATP_PWM1 duty while CCRB defines ATP_PWM2 duty
5. The internal PWM function continues running even when ATIO[1:0]=00 or 01
6. The ATCCLR bit has no influence on PWM operation, the ATDPX bit is kept at 0 by hardware

Audio PWM Output Usage Description

When operating in the Audio PWM Output Mode, the ATM is used to generate audio PWM waveforms according to decompressed PCM voice data that can then directly drive speakers. The following example introduces how to process 16-bit unsigned PCM voice data and write correct data into the CCRP, CCRA and CCRB registers to generate the corresponding audio PWM outputs.

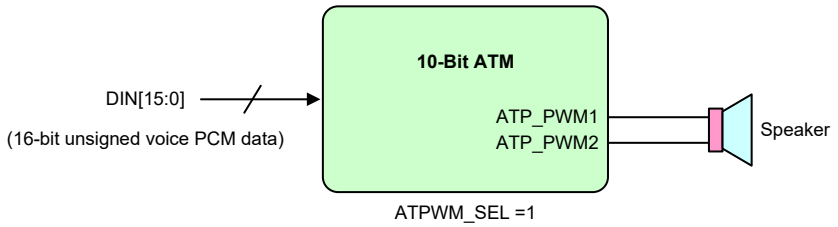

Audio PWM Output Application Schematic Diagram

The Audio PWM has two output modes, one is called the Differential Mode and the other is the Single Mode. Their output waveforms are illustrated in the following diagrams.

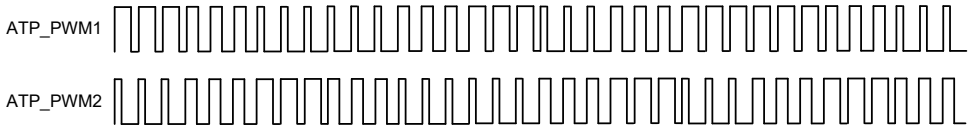

Differential PWM Mode

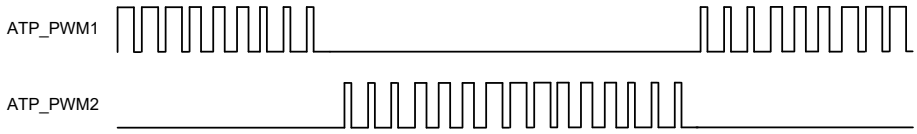

Single PWM Mode

The following provides a description of how to use the ATM function in this device to generate the Differential and Single Audio PWM outputs. In this example, the PWM resolution is 8-bit and the system clock is derived from f_H which is 8MHz. To generated the following Audio PWM output signals, the CCRA, CCRB and CCRP register together with the relevant ATM control registers should be setup according to the steps below.

- Step 1 – Configure the ATMC0 Regsiter
  Select the ATM counter clock to be from either f_{SYS} or f_H by setting the ATCK2~ATCK0 bits in the ATMC0 register to “001” or “101”. Set the ATPWM_SEL bit in the ATMC0 register to “1” to select the Audio PWM Output Mode. The ATMC0 register value will now be “00010--1b”.
- Step 2 – Configure the ATMC1 Register
  Set the ATM1~ATM0 bits in the ATMC1 register to “10” and ATIO1~ATIO0 bits to “10” to ensure that the ATM is used with the PWM output. Then set the ATOC bit to “1” and ATPOL bit to “0” to select the PWM ouput to be active high and non-inverted. The ATMC1 register value will now be “10101000b”.
- Step 3 – Configure the ATMRP Register
  Set the ATMRP register to “01000000b” to select the Comparator P match period as 256 ATM clocks. Therefore, the Audio PWM frequency=(f_{SYS})/256=31.25kHz. Of course, if the ATCK2~ATCK0 bits value is “000”, the corresponding Audio PWM frequency is (f_{SYS}/4)/256=7.8125kHz.

- Step 4 – Pin-shared function selection
  Correctly set the PES07~PES04 bits in the PES0 register or set the PES03~PES02 bits in the PES0 register and the PES11~PES10 bits in the PES1 register to select the pin as corresponding ATP_PWM1 and ATP_PWM2 function.
- Step 5 – Enable the ATM function
  After setting up the other ATM related functions, such as interrupts, etc., then set the ATON bit in the ATMC0 register to "1" to enable the ATM counter to run.
- Step 6 – Update CCRA and CCRB Values
  According to the input data, the CCRA and CCRB values should be updated. Refer to the following section for the calculation of the CCRA and CCRB values.

As there are two types of Audio PWM output waveforms, Differential mode and Single mode, the calculation methods are different for these two types.

Example 1 – Audio PWM Output Differential Mode, DIN[15:0]=4000H

For example, DIN[15:0]=4000H (unsigned voice data), to generae the differential PWM outputs on ATP_PWM1 and ATP_PWM2 as shown in the timing diagram below.

DIN[15:0]=4000H, DINB[15:0]=~DIN[15:0]=BFFFH

The higher 8-bit of DIN: DIN[15:8]=40H=64, DINB[15:8]=BFH=191

For ATP_PWM1: 8-bit DIN[15:8]=40H=64=CCRA, Duty=64/256≈25%

For ATP_PWM2: 8-bit DINB[15:8]=BFH=191=CCRB, Duty=191/256≈75%

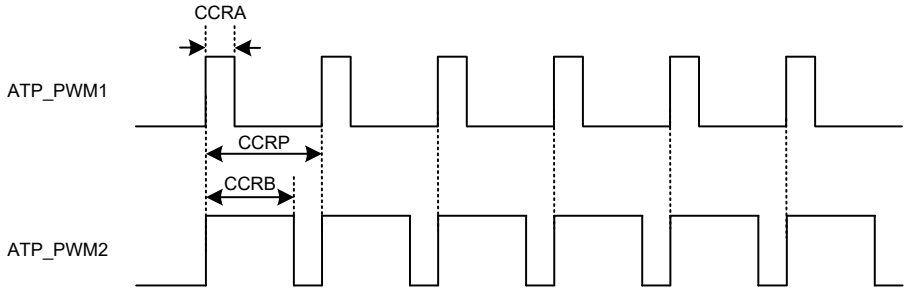

Example 2 – Audio PWM Output Differential Mode, DIN[15:0]=C000H

For example, DIN[15:0]=C000H (unsigned voice data), to generae the differential PWM outputs on ATP_PWM1 and ATP_PWM2 as shown in the timing diagram below.

DIN[15:0]=C000H, DINB[15:0]=~DIN[15:0]=3FFFH

The higher 8-bit of DIN: DIN[15:8]=C0H=192, DINB[15:8]=3FH=63

For ATP_PWM1: 8-bit DIN[15:8]=C0H=192=CCRA, Duty=192/256≈75%

For ATP_PWM2: 8-bit DINB[15:8]=3FH=63=CCRB, Duty=63/256≈25%

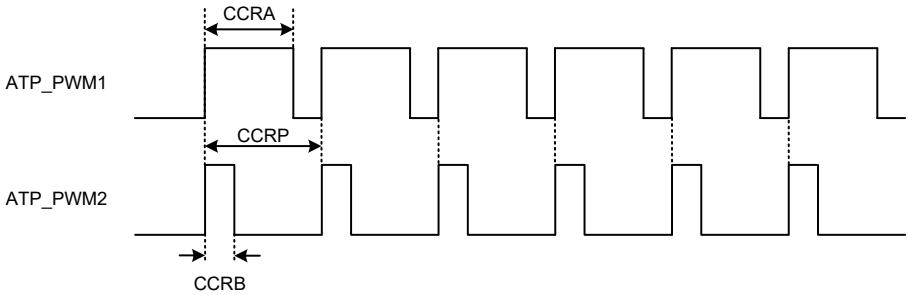

From the Example 1 ~ Example 2 above, the calculation method for the CCRA/CCRB values converted from the DIN[15:0] unsigned voice data for Audio PWM Differential mode can be obtained.

CCRA = DIN[15:8]

CCRB = DINB[15:8] = ~DIN[15:8]

The ATP_PWM1 and ATP_PWM2 output signal duty and the corresponding CCRA and CCRB values in the PWM output differential mode are shown in the following table.

DIN[15:0] (Unsigned Voice Data)	ATP_PWM1 Output	ATP_PWM2 Output	CCRA/CCRB Settings
(00H, 00H)	Pulse Duty≈0%	Pulse Duty≈100%	CCRA=DIN[15:8]=00H CCRB=~DIN[15:8]=FFH
(20H, 00H)	Pulse Duty≈12.5%	Pulse Duty≈87.5%	CCRA=DIN[15:8]=20H CCRB=~DIN[15:8]=DFH
(40H, 00H)	Pulse Duty≈25%	Pulse Duty≈75%	CCRA=DIN[15:8]=40H CCRB=~DIN[15:8]=BFH
(60H, 00H)	Pulse Duty≈37.5%	Pulse Duty≈62.5%	CCRA=DIN[15:8]=60H CCRB=~DIN[15:8]=9FH
(80H, 00H)	Pulse Duty≈50%	Pulse Duty≈50%	CCRA=DIN[15:8]=80H CCRB=~DIN[15:8]=7FH
(A0H, 00H)	Pulse Duty≈62.5%	Pulse Duty≈37.5%	CCRA=DIN[15:8]=A0H CCRB=~DIN[15:8]=5FH
(C0H, 00H)	Pulse Duty≈75%	Pulse Duty≈25%	CCRA=DIN[15:8]=C0H CCRB=~DIN[15:8]=3FH
(E0H, 00H)	Pulse Duty≈87.5%	Pulse Duty≈12.5%	CCRA=DIN[15:8]=E0H CCRB=~DIN[15:8]=1FH
(FFH, FFH)	Pulse Duty≈100%	Pulse Duty≈0%	CCRA=DIN[15:8]=FFH CCRB=~DIN[15:8]=00H

CCRA/CCRB Values – Audio PWM Output Differential Mode

Example 3 – Audio PWM Output Single Mode, DIN[15:0]=4000H

For example, DIN[15:0]=4000H (unsigned voice data), to generae the single PWM output on ATP_PWM1 or ATP_PWM2 as shown in the timing diagram below.

DIN[15:0]=4000H, DINB[15:0]=~DIN[15:0]=BFFFH

The Bit 14~Bit 7 of DINB: DINB[14:7]=7FH=127

For ATP_PWM1: As DIN[15]=0, CCRA=0, Duty=0/256≈0%

For ATP_PWM2: DINB[14:7]=7FH=127=CCRB, Duty=127/256≈50%

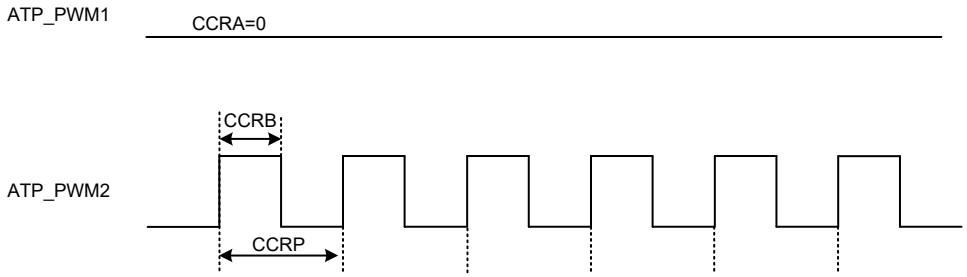

Example 4 – Audio PWM Output Single Mode, DIN[15:0]=C000H

For example, DIN[15:0]=C000H (unsigned voice data), to generae the single PWM output on ATP_PWM1 or ATP_PWM2 as shown in the timing diagram below.

DIN[15:0]=C000H, DINB[15:0]=~DIN[15:0]=3FFFH

The Bit 14~Bit 7 of DIN: DIN[14:7]=80H=128

For the ATP_PWM1: DIN[14:7]=80H=128=CCRA, Duty=128/256≈50%

For the ATP_PWM2: As DIN[15]=1, CCRB=0, Duty=0/256≈0%

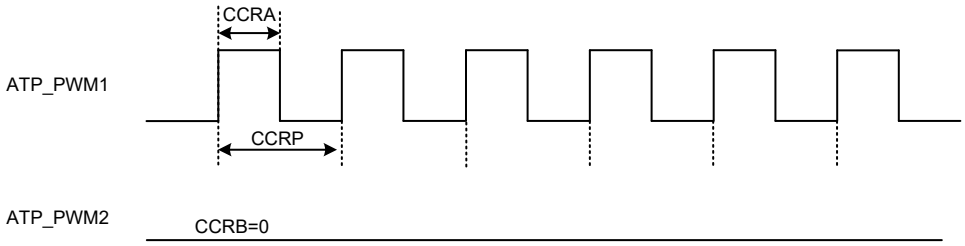

From the Example 3 ~ Example 4 above, the calculation method for the CCRA/CCRB values converted from the DIN[15:0] unsigned voice data for the Audio PWM single mode can be obtained.

- If DIN[15]=0, CCRA=0 (ATP_PWM1 outputs 0), CCRB=~DIN[14:7]
- If DIN[15]=1, CCRA=DIN[14:7], CCRB=0 (ATP_PWM2 outputs 0)

The ATP_PWM1 and ATP_PWM2 output signal duty and the corresponding CCRA and CCRB values in the PWM output single mode are shown in the following table.

DIN[15:0] (Unsigned Voice Data)	ATP_PWM1 Output	ATP_PWM2 Output	CCRA/CCRB Settings
(00H, 00H)	0	Pulse Duty≈100%	CCRA=00H CCRB=~DIN[14:7]=FFH
(20H, 00H)	0	Pulse Duty≈75%	CCRA=00H CCRB=~DIN[14:7]=BFH
(40H, 00H)	0	Pulse Duty≈50%	CCRA=00H CCRB=~DIN[14:7]=7FH
(60H, 00H)	0	Pulse Duty≈25%	CCRA=00H CCRB=~DIN[14:7]=3FH
(80H, 00H)	0	0	CCRA=DIN[14:7]=00H CCRB=00H
(A0H, 00H)	Pulse Duty≈25%	0	CCRA=DIN[14:7]=40H CCRB=00H
(C0H, 00H)	Pulse Duty≈50%	0	CCRA=DIN[14:7]=80H CCRB=00H
(E0H, 00H)	Pulse Duty≈75%	0	CCRA=DIN[14:7]=C0H CCRB=00H
(FFH, FFH)	Pulse Duty≈100%	0	CCRA=DIN[14:7]=FFH CCRB=00H

CCRA/CCRB Values – Audio PWM Output Single Mode

Analog to Digital Converter

The need to interface to real world analog signals is a common requirement for many electronic systems. However, to properly process these signals by a microcontroller, they must first be converted into digital signals by A/D converters. By integrating the A/D conversion electronic circuitry into the microcontroller, the need for external components is reduced significantly with the corresponding follow-on benefits of lower costs and reduced component space requirements.

A/D Converter Overview

The devices contain a high accuracy multi-channel 24-bit Delta Sigma analog-to-digital converter which can directly interface to external analog signals, such as that from sensors or other control signals and convert these signals directly into a 24-bit digital value.

In addition, PGA gain control and A/D converter gain control determine the amplification gain for A/D converter input signal. The designer can select the best gain combination for the desired amplification applied to the input signal. The following block diagram illustrates the A/D converter basic operational function. The A/D converter input channel can be arranged as 6 single-ended A/D converter external input channels or 3 differential external input channels. The input signal can be amplified by PGA before entering the 24-bit Delta Sigma A/D converter. The A/D converter module will output one bit converted data to SINC filter which can transform the converted one-bit data to 24 bits and store them into the specific data registers. Additionally, the devices also provide a temperature sensor to compensate the A/D converter deviation caused by the temperature. With high accuracy and performance, the devices are very suitable for differential output sensor applications such as weight measurement scales and other related products.

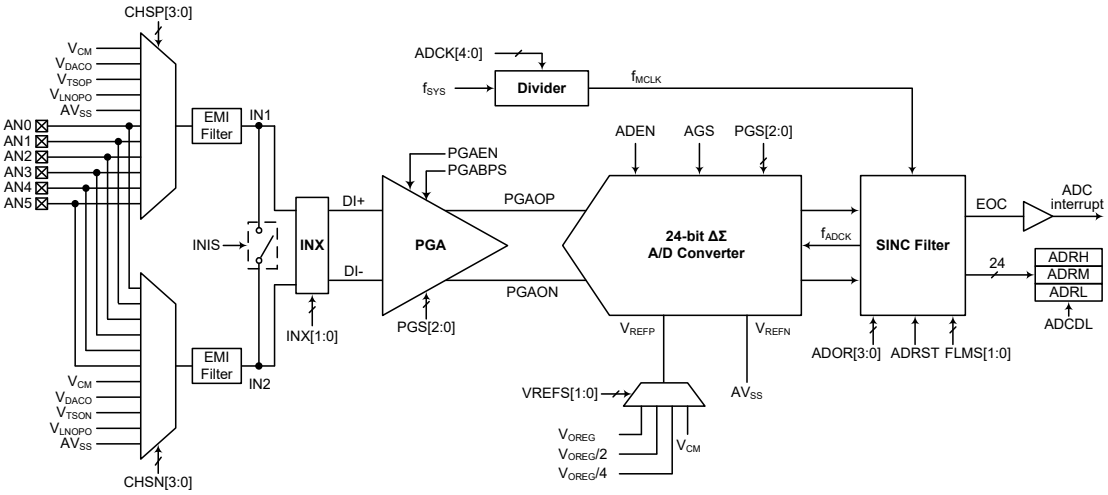

A/D Converter Structure

Internal Power Supply

The devices contain an LDO for the regulated power supply. The accompanying block diagram illustrates the basic functional operation. The internal LDO can provide the fixed voltage for the PGA, A/D converter or the external components. There are four LDO voltage levels, 2.4V, 2.6V, 2.9V or 3.3V, determined by the LDOVS1~LDOVS0 bits in the PWRC register. The LDO function can be controlled by the LDOEN bit and can be powered off to reduce overall power consumption.

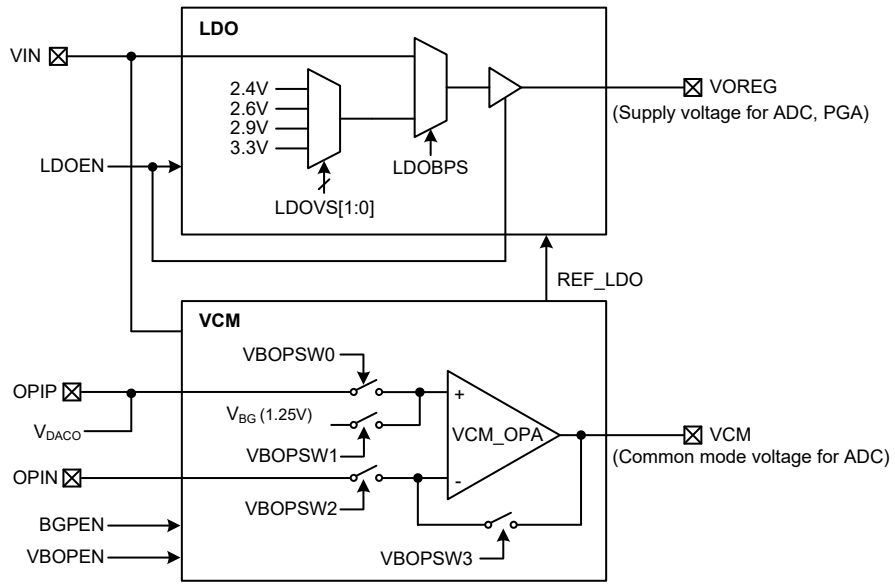

Internal Power Supply Block Diagram

- **PWRC Register**

Bit	7	6	5	4	3	2	1	0
Name	LDOEN	BGPEN	—	—	TSEN	LDOBPS	LDOVS1	LDOVS0
R/W	R/W	R/W	—	—	R/W	R/W	R/W	R/W
POR	0	0	—	—	0	0	0	0

Bit 7 **LDOEN**: LDO function enable control
0: Disable
1: Enable
If the LDO is disabled, there will be no power consumption and the LDO output will be in a low level using a weak internal pull-low resistor.

Bit 6 **BGPEN**: Bandgap enable control
0: Disable
1: Enable
The BGPEN bit is the overall on/off control for the A/D Converter block bandgap, and all A/D Converter related functions need to be set under BGPEN=1.

Bit 5~4 Unimplemented, read as “0”

Bit 3 **TSEN**: Internal temperature sensor enable control
0: Disable
1: Enable

Bit 2 **LDOBPS**: LDO bypass enable control
0: Disable
1: Enable

Bit 1~0 **LDOVS1~LDOVS0**: LDO output voltage selection
00: 2.4V
01: 2.6V
10: 2.9V
11: 3.3V

• **VBOPC Register**

Bit	7	6	5	4	3	2	1	0
Name	VBOPEN	—	—	—	VBOPSW3	VBOPSW2	VBOPSW1	VBOPSW0
R/W	R/W	—	—	—	R/W	R/W	R/W	R/W
POR	0	—	—	—	1	0	1	0

Bit 7 **VBOPEN**: VCM enable control
0: Disable
1: Enable

Bit 6~4 Unimplemented, read as "0"

Bit 3 **VBOPSW3**: Switch control bit for VCM_OPA configuration
0: Off
1: On

Bit 2 **VBOPSW2**: Switch control bit for VCM_OPA configuration
0: Off
1: On

Bit 1 **VBOPSW1**: Switch control bit for VCM_OPA configuration
0: Off
1: On

Bit0 **VBOPSW0**: Switch control bit for VCM_OPA configuration
0: Off
1: On
When this bit is set high, the D/A converter output can be used as the positive input of the OPA in the VCM if the D/A converter is enabled. Care should be taken that in such case, the original external input on the OPIP pin, if exists, must be removed, otherwise this will result in unpredictable situations.

Note: This OPA can be used for signal amplification according to specific user requirements. With specific control registers, some OPA related applications can be more flexible and easier to be implemented. The initial state of OPA is a voltage follower for V_{BG} (1.25V).

A/D Converter Data Rate Definition

The Delta Sigma A/D converter data rate can be calculated using the following equation:

Data Rate for SINC2

$= f_{ADCK}/(2\times OSR)$

$= (f_{MCLK}/N)/(2\times OSR)$

$= f_{MCLK}/(N\times 2\times OSR)$

Data Rate for SINC3

$= f_{ADCK}/OSR$

$= (f_{MCLK}/N)/OSR$

$= f_{MCLK}/(N\times OSR)$

f_{ADCK}: A/D converter clock frequency, derived from f_{MCLK}/N.

f_{MCLK}: A/D converter clock source, derived from f_{SYS} or $f_{SYS}/2/(ADCK+1)$ using the ADCK bit field.

N: A constant divide factor equal to 12 or 30 determined by the FLMS bit field.

OSR: Oversampling rate determined by the ADOR bit field.

For example, if a data rate of 8Hz is desired, an f_{MCLK} clock source with a frequency of 4MHz A/D converter can be selected. Then set the FLMS field to "00" to obtain an "N" equal to 30.

For the SINC2 filter, set the ADOR field to "0010" to select an oversampling rate equal to 8192. Therefore, the Data Rate = 4MHz/(30×2×8192) = 8Hz.

For the SINC3 filter, set the ADOR field to "0001" to select an oversampling rate equal to 16384. Therefore, the Data Rate = 4MHz/(30×16384) = 8Hz.

A/D Converter Register Description

Overall operation of the A/D converter is controlled by using a series of registers. A control register named as PWRC is used to control the power supply related settings for the PGA and A/D converter, another control register VBOPC is used to control the switches for OPA configuration in the VCM, these registers are described in the "Internal Power Supply" section. A control register named LNOPC is used to control the low noise operational amplifier. Three registers are used to control the D/A converter operation. Three read only registers exist to store the A/D converter data 24-bit value. The remaining registers are control registers which setup the gain selections and control functions of the PGA and A/D converter.

Register Name	Bit							
	7	6	5	4	3	2	1	0
PWRC	LDOEN	BGPEN	—	—	TSEN	LDOBPS	LDOVS1	LDOVS0
PGAC0	VREFS1	VREFS0	AGS	PGAEN	PGABPS	PGAS2	PGAS1	PGAS0
PGAC1	INIS	INX1	INX0	—	—	—	—	—
PGACS	CHSN3	CHSN2	CHSN1	CHSN0	CHSP3	CHSP2	CHSP1	CHSP0
ADRL	D7	D6	D5	D4	D3	D2	D1	D0
ADRM	D15	D14	D13	D12	D11	D10	D9	D8
ADRH	D23	D22	D21	D20	D19	D18	D17	D16
ADCR0	SINCS	D6	FLMS1	FLMS0	ADOR3	ADOR2	ADOR1	ADOR0
ADCR1	—	—	ADCDL	EOC	ADRST	ADEN	—	—
ADCS	—	—	—	ADCK4	ADCK3	ADCK2	ADCK1	ADCK0
VBOPC	VBOPEN	—	—	—	VBOPSW3	VBOPSW2	VBOPSW1	VBOPSW0
LNOPC	LNOPEN	—	—	—	—	LNOPP	LNOPSW1	LNOPSW0
DSDACC	DSDACEN	DSDACVRS	—	—	—	—	—	—
DSDAH	D11	D10	D9	D8	D7	D6	D5	D4
DSDAL	—	—	—	—	D3	D2	D1	D0

A/D Converter Register List

Programmable Gain Amplifier Registers – PGAC0, PGAC1, PGACS

There are three registers related to the programmable gain control, PGAC0, PGAC1 and PGACS. The PGAC0 register is used to select the PGA gain, the A/D Converter gain and the A/D converter reference voltage pair as well as control the PGA enable/disable and PGA bypass function. The PGAC1 register is used to define the input connection. In addition, the PGACS register is used to select the PGA inputs. Therefore, the input channels have to be determined by the CHSP3~CHSP0 and CHSN3~CHSN0 bits to determine which analog channel input pins, temperature sensor inputs or internal power supply are actually connected to the internal differential A/D converter.

- **PGAC0 Register**

Bit	7	6	5	4	3	2	1	0
Name	VREFS1	VREFS0	AGS	PGAEN	PGABPS	PGAS2	PGAS1	PGAS0
R/W	R/W	R/W	R/W	R/W	R/W	R/W	R/W	R/W
POR	0	0	0	0	0	0	0	0

Bit 7~6 **VREFS1~VREFS0**: A/D converter reference voltage pair selection
00: Internal reference voltage pair – V_{CM} & AV_{SS}
01: Internal reference voltage pair – V_{OREG} & AV_{SS}
10: Internal reference voltage pair – $V_{OREG}/2$ & AV_{SS}
11: Internal reference voltage pair – $V_{OREG}/4$ & AV_{SS}

Bit 5 **AGS**: A/D converter PGAOP/PGAON differential input signal gain selection
0: ADGN=1
1: ADGN=2

Bit 4 **PGAEN**: PGA enable control
0: Disable
1: Enable

This bit controls the overall enable/disable function of the PGA circuits. The related functions will only be availabile when the PGAEN is set high.

Bit 3 **PGABPS**: PGA bypass control
0: Normal mode
1: Bypass PGA mode

Bit 2~0 **PGAS2~PGAS0**: PGA DI+/DI- differential channel input gain selection
000: PGAGN=1
001: PGAGN=2
010: PGAGN=4
011: PGAGN=8
100: PGAGN=16
101: PGAGN=32
110: PGAGN=64
111: PGAGN=128

• **PGAC1 Register**

Bit	7	6	5	4	3	2	1	0
Name	INIS	INX1	INX0	—	—	—	—	—
R/W	R/W	R/W	R/W	—	—	—	—	—
POR	0	0	0	—	—	—	—	—

Bit 7 **INIS**: The selected input ends, IN1/IN2, internal connection control
0: Not connected
1: Connected

Bit 6~5 **INX1~INX0**: The selected input ends, IN1/IN2, and the PGA differential input ends, DI+/DI-, connection control

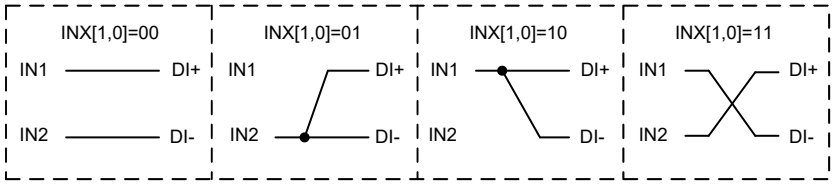

Bit 4~0 Unimplemented, read as “0”

• **PGACS Register**

Bit	7	6	5	4	3	2	1	0
Name	CHSN3	CHSN2	CHSN1	CHSN0	CHSP3	CHSP2	CHSP1	CHSP0
R/W	R/W	R/W	R/W	R/W	R/W	R/W	R/W	R/W
POR	0	0	0	0	0	0	0	0

Bit 7~4 **CHSN3~CHSN0**: Negative input end IN2 selection
0000: AN0
0001: AN1
0010: AN2
0011: AN3
0100: AN4
0101: AN5
0110~0111: Reserved
1000: V_{CM}

1001: V_{DACO}
1010: Temperature sensor output – V_{TSON}
1011: V_{LNOPO}
1100~1110: Reserved
1111: AV_{SS}

These bits are used to select the negative input, IN2. If the IN2 input is selected as a single end input, the V_{CM} voltage must be selected as the positive input on IN1 for single end input applications. It is recommended that when the V_{TSON} signal is selected as the negative input, the V_{TSOP} signal should be selected as the positive input for proper operations.

Bit 3~0 **CHSP3~CHSP0**: Positive input end IN1 selection
0000: AN0
0001: AN1
0010: AN2
0011: AN3
0100: AN4
0101: AN5
0110~0111: Reserved
1000: V_{CM}
1001: V_{DACO}
1010: Temperature sensor output – V_{TSOP}
1011: V_{LNOPO}
1100~1110: Reserved
1111: AV_{SS}

These bits are used to select the positive input, IN1. If the IN1 input is selected as a single end input, the V_{CM} voltage must be selected as the negative input on IN2 for single end input applications. It is recommended that when the V_{TSOP} signal is selected as the positive input, the V_{TSON} signal should be selected as the negative input for proper operations.

Low Noise Operational Amplifier Control Register – LNOPC

There is a fully integrated low noise operational amplifier in the devices. This OPA can be used for signal amplification according to specific user requirements. The OPA can be disabled or enabled entirely under software control using internal register. With specific control register, some OPA related applications can be more flexible and easier to be implemented, such as Unit Gain Buffer, Non-Inverting Amplifier, Inverting Amplifier and various kinds of filters, etc.

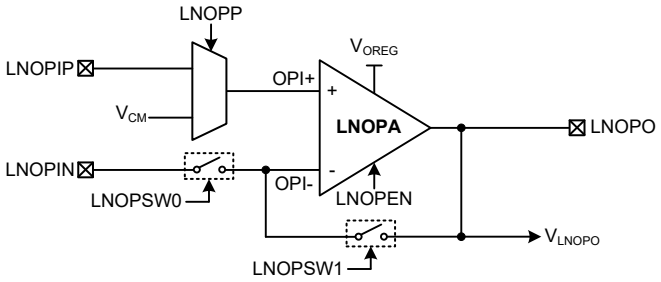

• **LNOPC Register**

Bit	7	6	5	4	3	2	1	0
Name	LNOPEN	—	—	—	—	LNOPP	LNOPSW1	LNOPSW0
R/W	R/W	—	—	—	—	R/W	R/W	R/W
POR	0	—	—	—	—	0	0	0

Bit 7 **LNOPEN**: LNOPA enable control
0: Disable
1: Enable

Bit 6~3 Unimplemented, read as "0"

Bit 2 **LNOPP**: LNOPA positive input end OPI+ selection
0: LNOPIP pin
1: V_{CM}

Bit 1 **LNOPSW1**: Switch control bit for LNOPA configuration
0: Off
1: On

Bit 0 **LNOPSW0**: Switch control bit for LNOPA configuration
0: Off
1: On

D/A Converter Registers – DSDAH, DSDAL, DSDACC

The devices have integrated a 12-bit D/A converter, whose output can be used as the A/D converter input signal. By configuring the specific control register, the D/A converter output can be used as the positive input signal of the OPA in the VCM if the D/A converter is enabled. There are three registers related to the D/A converter operation. Two data registers are used for D/A converter output control, one control register is used for D/A converter enable control and reference voltage selection.

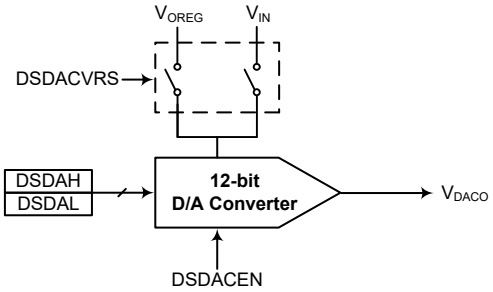

• DSDAL Register

Bit	7	6	5	4	3	2	1	0
Name	—	—	—	—	D3	D2	D3	D0
R/W	—	—	—	—	R/W	R/W	R/W	R/W
POR	—	—	—	—	0	0	0	0

Bit 7~4 Unimplemented, read as "0"

Bit 3~0 **D3~D0**: 12-bit D/A converter output control code bit 3 ~ bit 0

Note: Each time when the DSDAH register is written, the whole 12-bit data will be loaded into the D/A converter and a conversion cycle will be initiated.

• DSDAH Register

Bit	7	6	5	4	3	2	1	0
Name	D11	D10	D9	D8	D7	D6	D5	D4
R/W	R/W	R/W	R/W	R/W	R/W	R/W	R/W	R/W
POR	0	0	0	0	0	0	0	0

Bit 7~0 **D11~D4**: 12-bit D/A converter output control code bit 11 ~ bit 4

• **DSDACC Register**

Bit	7	6	5	4	3	2	1	0
Name	DSDACEN	DSDACVRS	—	—	—	—	—	—
R/W	R/W	R/W	—	—	—	—	—	—
POR	0	0	—	—	—	—	—	—

Bit 7 **DSDACEN**: D/A converter enable control
0: Disable
1: Enable

Bit 6 **DSDACVRS**: D/A converter reference voltage selection
0: D/A converter reference voltage comes from V_{OREG}
1: D/A converter reference voltage comes from V_{IN}

Bit 5~0 Unimplemented, read as "0"

A/D Converter Data Registers – ADRL, ADRM, ADRH

The 24-bit Delta Sigma A/D converter requires three data registers to store the converted value. These are a high byte register, known as ADRH, a middle byte register, known as ADRM, and a low byte register, known as ADRL. After the conversion process takes place, these registers can be directly read by the microcontroller to obtain the digitised conversion value. D0~D23 are the A/D conversion result data bits.

• **ADRL Register**

Bit	7	6	5	4	3	2	1	0
Name	D7	D6	D5	D4	D3	D2	D1	D0
R/W	R	R	R	R	R	R	R	R
POR	x	x	x	x	x	x	x	x

"x": unknown

Bit 7~0 **D7~D0**: A/D conversion data register bit 7 ~ bit 0

• **ADRM Register**

Bit	7	6	5	4	3	2	1	0
Name	D15	D14	D13	D12	D11	D10	D9	D8
R/W	R	R	R	R	R	R	R	R
POR	x	x	x	x	x	x	x	x

"x": unknown

Bit 7~0 **D15~D8**: A/D conversion data register bit 15 ~ bit 8

• **ADRH Register**

Bit	7	6	5	4	3	2	1	0
Name	D23	D22	D21	D20	D19	D18	D17	D16
R/W	R	R	R	R	R	R	R	R
POR	x	x	x	x	x	x	x	x

"x": unknown

Bit 7~0 **D23~D16**: A/D conversion data register bit 23 ~ bit 16

A/D Converter Control Registers – ADCR0, ADCR1, ADCS

To control the function and operation of the A/D converter, three control registers known as ADCR0, ADCR1 and ADCS are provided. These 8-bit registers define functions such as the A/D converter clock source, the A/D converter output data rate as well as controlling the power-up function and monitoring the A/D converter end of conversion status.

• ADCR0 Register

Bit	7	6	5	4	3	2	1	0
Name	SINCS	D6	FLMS1	FLMS0	ADOR3	ADOR2	ADOR1	ADOR0
R/W	R/W	R/W	R/W	R/W	R/W	R/W	R/W	R/W
POR	0	0	0	0	0	0	0	0

Bit 7 **SINCS**: SINC selection
0: SINC3 filter
1: SINC2 filter

Bit 6 **D6**: Reserved

Bit 5~4 **FLMS1~FLMS0**: A/D converter clock f_{ADCK} selection
00: $f_{ADCK}=f_{MCLK}/30$, N=30
10: $f_{ADCK}=f_{MCLK}/12$, N=12
Others: Reserved

Bit 3~0 **ADOR3~ADOR0**: A/D conversion oversampling rate selection
0000: Oversampling rate OSR = 32768
0001: Oversampling rate OSR = 16384
0010: Oversampling rate OSR = 8192
0011: Oversampling rate OSR = 4096
0100: Oversampling rate OSR = 2048
0101: Oversampling rate OSR = 1024
0110: Oversampling rate OSR = 512
0111: Oversampling rate OSR = 256
1000: Oversampling rate OSR = 128
Others: Reserved

• ADCR1 Register

Bit	7	6	5	4	3	2	1	0
Name	—	—	ADCDL	EOC	ADRST	ADEN	—	—
R/W	—	—	R/W	R/W	R/W	R/W	—	—
POR	—	—	0	0	0	0	—	—

Bit 7~6 Unimplemented, read as “0”

Bit 5 **ADCDL**: A/D converted data latch function enable control
0: Disable
1: Enable

If the A/D converted data latch function is enabled, the latest converted data value will be latched and will not be updated by any subsequent converted results until this function is disabled. Although the converted data is latched into the data registers, the A/D converter circuits remain operational, but will not generate an interrupt and the EOC will not change. It is recommended that this bit should be set high before reading the converted data from the ADRL, ADRM and ADRH registers. After the converted data has been read out, the bit can then be cleared to zero to disable the A/D converter data latch function and allow further conversion values to be stored. In this way, the possibility of obtaining undesired data during A/D converter conversions can be prevented.

Bit 4 **EOC**: End of A/D conversion flag
0: A/D conversion in progress
1: A/D conversion ended

This bit must be cleared by software.

Bit 3 **ADRST**: A/D converter software reset enable control
0: Disable
1: Enable
This bit is used to reset the A/D converter internal digital SINC filter. This bit is cleared to zero for A/D normal operations. However, if set high, the internal digital SINC filter will be reset and the current A/D converted data will be aborted. A new A/D data conversion process will not be initiated until this bit is cleared to zero again.

Bit 2 **ADEN**: A/D converter function enable control
0: Disable
1: Enable
This bit controls the A/D converter function enable/disable. This bit should be set high to enable the A/D converter. If the bit is cleared to zero then the A/D converter will be switched off reducing the device power consumption. As the A/D converter will consume a limited amount of power, even when not executing a conversion, this may be an important consideration in power sensitive battery powered applications.

Bit 1~0 Unimplemented, read as "0"

- **ADCS Register**

Bit	7	6	5	4	3	2	1	0
Name	—	—	—	ADCK4	ADCK3	ADCK2	ADCK1	ADCK0
R/W	—	—	—	R/W	R/W	R/W	R/W	R/W
POR	—	—	—	0	0	0	0	0

Bit 7~5 Unimplemented, read as "0"

Bit 4~0 **ADCK4~ADCK0**: A/D converter clock source f_{MCLK} setup
00000~11110: $f_{MCLK}=f_{SYS}/2/(ADCK[4:0]+1)$
11111: $f_{MCLK}=f_{SYS}$

A/D Converter Operation

The ADRST bit in the ADCR1 register is used to start and reset the A/D converter after power on. When the microcontroller changes this bit from low to high and then low again, an analog to digital conversion in the SINC filter will be initiated. After this setup is completed, the A/D Converter is ready for operation. This bit is used to control the overall start operation of the internal analog to digital converter.

The EOC bit in the ADCR1 register is used to indicate when the analog to digital conversion process is complete. This bit will be automatically set high by the microcontroller after a conversion cycle has ended. In addition, the corresponding A/D converter interrupt request flag will be set in the interrupt control register, and if the interrupts are enabled, an appropriate internal interrupt signal will be generated. This A/D converter internal interrupt signal will direct the program flow to the associated A/D converter internal interrupt address for processing. If the A/D converter internal interrupt is disabled, the microcontroller can poll the EOC bit in the ADCR1 register to check whether it has been set to "1" as an alternative method of detecting the end of an A/D conversion cycle. The A/D converted data will be updated continuously by the new converted data. If the A/D converted data latch function is enabled, the latest converted data will be latched and the following new converted data will be discarded until this data latch function is disabled.

The clock source for the A/D converter should be typically fixed at a value of 4MHz, which originates from the system clock f_{SYS}, and can be chosen to be either f_{SYS} or a subdivided version of f_{SYS}. The division ratio value is determined by the ADCK4~ADCK0 bits in the ADCS register to obtain a 4MHz clock source for the A/D Converter.

The differential reference voltage supply to the A/D Converter can be supplied from either the internal reference sources, V_{CM} and AV_{SS}, or from V_{OREG} and AV_{SS}, or from a subdivided version of V_{OREG} and AV_{SS}. The desired selection is made using the VREFS1~VREFS0 bits in the PGAC0 register.

Summary of A/D Conversion Steps

The following summarises the individual steps that should be executed in order to implement an A/D conversion process.

- Step 1
  Enable the power LDO for PGA and A/D converter.
- Step 2
  Select the PGA gain and the A/D converter gain as well as the A/D converter reference voltage pair by the PGAC0 register.
- Step 3
  Select the PGA input connection by the PGAC1 register.
- Step 4
  Select the required A/D conversion clock source by correctly programming the ADCK4~ADCK0 bits in the ADCS register.
- Step 5
  Select output data rate by configuring the ADOR2~ADOR0 and FLMS1~FLMS0 bits in the ADCR0 register.
- Step 6
  Select which channel is to be connected to the internal PGA by correctly programming the CHSP3~CHSP0 and CHSN3~CHSN0 bits which are also contained in the PGACS register.
- Step 7
  Enable the A/D converter by setting the ADEN bit in the ADCR1 register high.
- Step 8
  Reset the A/D converter by setting the ADRST bit in the ADCR1 register high and then clearing this bit to zero to release the reset status.
- Step 9
  If the A/D converter interrupt is to be used, the related interrupt control registers must be correctly configured to ensure the A/D converter interrupt function is active. The master interrupt control bit, EMI, and the A/D converter interrupt bit, ADE, must both be set high to do this.
- Step 10
  To check when the analog to digital conversion process is complete, the EOC bit in the ADCR1 register can be polled. The conversion process is complete when this bit goes high. When this occurs the A/D converter data registers ADRL, ADRM and ADRH can be read to obtain the conversion value. As an alternative method, if the interrupts are enabled and the stack is not full, the program can wait for an A/D converter interrupt to occur.

Note: When checking for the end of the conversion process, if the method of polling the EOC bit in the ADCR1 register is used, the interrupt enable step above can be omitted.

Programming Considerations

During microcontroller operations where the A/D converter is not being used, the A/D converter internal circuitry can be switched off to reduce power consumption, by clearing the ADEN bit in the ADCR1 register to zero. When this happens, the internal A/D converter circuits will not consume power irrespective of what analog voltage is applied to their input lines.

A/D Converter Transfer Function

The devices contain a 24-bit Delta Sigma A/D converter and its full-scale converted digitized value is from 8388607 to -8388608 in decimal value. The converted data format is formed using a two's complement binary value. The MSB of the converted data is the signed bit. Since the full-scale analog input value is equal to the differential reference input voltage, ΔVR±, selected by the VREFS1~VREFS0 bits in the PGAC0 register, this gives a single bit analog input value of ΔVR± divided by 8388608.

$$1\ LSB = \Delta VR\pm/8388608$$

The A/D Converter input voltage value can be calculated using the following equation:

$$\Delta SI_I = PGAGN \times ADGN \times \Delta DI\pm$$

$$ADC_Conversion_Data = (\Delta SI_I/\Delta VR\pm) \times K$$

Where K is equal to 2^{23}

Note: 1. The PGAGN and ADGN values are decided by the PGS[2:0] and AGS control bits
2. ΔSI_I: Differential Input Signal after amplification
3. PGAGN: Programmable Gain Amplifier gain
4. ADGN: A/D Converter gain
5. ΔDI±: Differential input signal derived from external channels or internal signals
6. ΔVR±: Differential Reference voltage

Due to the digital system design of the Delta Sigma A/D Converter, the maximum A/D converted value is 8388607 and the minimum value is -8388608. Therefore, there is a middle value of 0. The ADC_Conversion_Data equation illustrates this range of converted data variation.

A/D Conversion Data (2's complement, Hexadecimal)	Decimal Value
0x7FFFFF	8388607
0x800000	-8388608

A/D Conversion Data Range

The above A/D conversion data table illustrates the range of A/D conversion data.

The following diagram shows the relationship between the DC input value and the A/D converted data which is presented using Two's Complement.

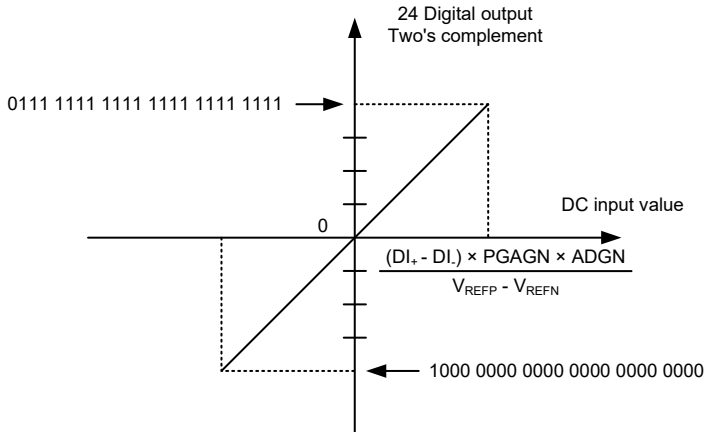

A/D Converted Data

The A/D converted data is related to the input voltage and the PGA selections. The format of the A/D Converter output is a two's complement binary code. The length of this output code is 24 bits and the MSB is a signed bit. When the MSB is "0", this represents a "positive" input. If the MSB is "1", this represents a "negative" input. The maximum value is 8388607 and the minimum value is -8388608. If the input signal is greater than the maximum value, the converted data is limited to 8388607, and if the input signal is less than the minimum value, the converted data is limited to -8388608.

A/D Converted Data to Voltage

The converted data can be recovered using the following equations:

If MSB = 0 – Positive Converted data

$$\text{Input Voltage} = \frac{(\text{Converted_data})\times\text{LSB}}{\text{PGAGN}\times\text{ADGN}}$$

If the MSB = 1 – Negative Converted data

$$\text{Input voltage} = \frac{(\text{Two's_complement_of_Converted_data})\times\text{LSB}}{\text{PGAGN}\times\text{ADGN}}$$

Note: Two's complement = One's complement + 1

Temperature Sensor

An internal temperature sensor is integrated within the devices to allow compensation for temperature effects. By selecting the PGA input channels to the V_{TSOP} and V_{TSON} signals, the A/D Converter can obtain temperature information and allow compensation to be carried out on the A/D converted data. The following block diagram illustrates the functional operation for the temperature sensor.

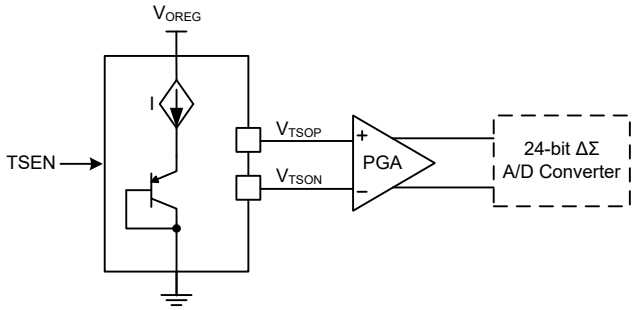

Temperature Sensor Structure

Serial Interface Module – SIM

The devices contain a Serial Interface Module, which includes both the four-line SPI interface or two-line I^2C interface types, to allow an easy method of communication with external peripheral hardware. Having relatively simple communication protocols, these serial interface types allow the microcontroller to interface to external SPI or I^2C based hardware such as sensors, Flash or EEPROM memory, etc. The SIM interface pins are pin-shared with other I/O pins and therefore the SIM interface functional pins must first be selected using the corresponding pin-shared function selection bits. As both interface types share the same pins and registers, the choice of whether the SPI or I^2C type is used is made using the SIM operating mode control bits, named SIM2~SIM0, in the SIMC0 register. These pull-high resistors of the SIM pin-shared I/O pins are selected using pull-high control registers when the SIM function is enabled and the corresponding pins are used as SIM input pins.

SPI Interface

This SPI interface function, which is part of the Serial Interface Module, should not be confused with the other independent SPI function, which is described in another section of this datasheet.

The SPI interface is often used to communicate with external peripheral devices such as sensors, Flash or EEPROM memory devices, etc. Originally developed by Motorola, the four line SPI interface is a synchronous serial data interface that has a relatively simple communication protocol simplifying the programming requirements when communicating with external hardware devices.

The communication is full duplex and operates as a slave/master type, where the device can be either master or slave. Although the SPI interface specification can control multiple slave devices from a single master, the device provided only one $\overline{SCS}$ pin. If the master needs to control multiple slave devices from a single master, the master can use I/O pin to select the slave devices.

SPI Interface Operation

The SPI interface is a full duplex synchronous serial data link. It is a four line interface with pin names SDI, SDO, SCK and $\overline{SCS}$. Pins SDI and SDO are the Serial Data Input and Serial Data Output lines, SCK is the Serial Clock line and $\overline{SCS}$ is the Slave Select line. As the SPI interface pins are pin-shared with normal I/O pins and with the I^2C function pins, the SPI interface pins must first be selected by configuring the pin-shared function selection bits and setting the correct bits in the SIMC0 and SIMC2 registers. After the desired SPI configuration has been set it can be disabled or enabled using the SIMEN bit in the SIMC0 register. Communication between devices connected to the SPI interface is carried out in a slave/master mode with all data transfer initiations being implemented by the master. The Master also controls the clock signal. As the device only contains a single $\overline{SCS}$ pin only one slave device can be utilized. The $\overline{SCS}$ pin is controlled by software, set CSEN bit to 1 to enable $\overline{SCS}$ pin function, set CSEN bit to 0 the $\overline{SCS}$ pin will be floating state.

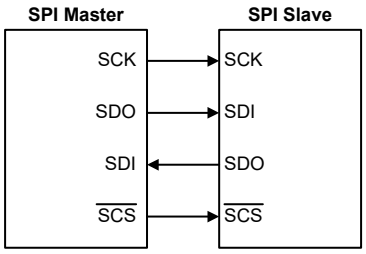

SPI Master/Slave Connection

The SPI function in these devices offers the following features:

- Full duplex synchronous data transfer
- Both Master and Slave modes

- LSB first or MSB first data transmission modes
- Transmission complete flag
- Rising or falling active clock edge

The status of the SPI interface pins is determined by a number of factors such as whether the device is in the master or slave mode and upon the condition of certain control bits such as CSEN and SIMEN.

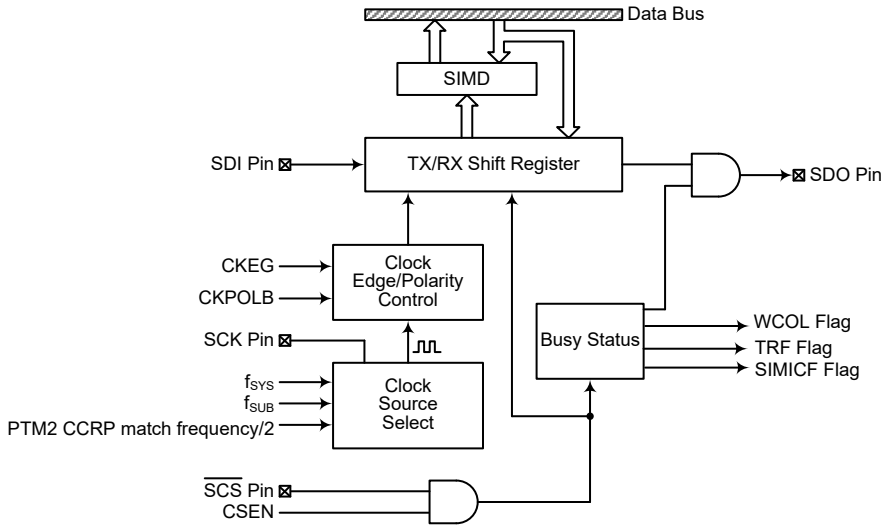

SPI Block Diagram

SPI Registers

There are three internal registers which control the overall operation of the SPI interface. These are the SIMD data register and two registers SIMC0 and SIMC2.

Register Name	Bit							
	7	6	5	4	3	2	1	0
SIMC0	SIM2	SIM1	SIM0	—	SIMDEB1	SIMDEB0	SIMEN	SIMICF
SIMC2	D7	D6	CKPOLB	CKEG	MLS	CSEN	WCOL	TRF
SIMD	D7	D6	D5	D4	D3	D2	D1	D0

SPI Register List

SPI Data Register

The SIMD register is used to store the data being transmitted and received. The same register is used by both the SPI and I²C functions. Before the device writes data to the SPI bus, the actual data to be transmitted must be placed in the SIMD register. After the data is received from the SPI bus, the device can read it from the SIMD register. Any transmission or reception of data from the SPI bus must be made via the SIMD register.

- **SIMD Register**

Bit	7	6	5	4	3	2	1	0
Name	D7	D6	D5	D4	D3	D2	D1	D0
R/W	R/W	R/W	R/W	R/W	R/W	R/W	R/W	R/W
POR	x	x	x	x	x	x	x	x

"x": unknown

Bit 7~0 **D7~D0**: SIM data register bit 7 ~ bit 0

SPI Control Registers

There are also two control registers for the SPI interface, SIMC0 and SIMC2. Note that the SIMC2 register also has the name SIMA which is used by the I²C function. The SIMC1 register is not used by the SPI function, only by the I²C function. Register SIMC0 is used to control the enable/disable function and to set the data transmission clock frequency. Register SIMC2 is used for other control functions such as LSB/MSB selection, write collision flag, etc.

- **SIMC0 Register**

Bit	7	6	5	4	3	2	1	0
Name	SIM2	SIM1	SIM0	—	SIMDEB1	SIMDEB0	SIMEN	SIMICF
R/W	R/W	R/W	R/W	—	R/W	R/W	R/W	R/W
POR	1	1	1	—	0	0	0	0

Bit 7~5 **SIM2~SIM0**: SIM Operating Mode Control
000: SPI master mode; SPI clock is $f_{SYS}/4$
001: SPI master mode; SPI clock is $f_{SYS}/16$
010: SPI master mode; SPI clock is $f_{SYS}/64$
011: SPI master mode; SPI clock is f_{SUB}
100: SPI master mode; SPI clock is PTM2 CCRP match frequency/2
101: SPI slave mode
110: I²C slave mode
111: Non SIM function

These bits setup the overall operating mode of the SIM function. As well as selecting if the I²C or SPI function, they are used to control the SPI Master/Slave selection and the SPI Master clock frequency. The SPI clock is a function of the system clock but can also be chosen to be sourced from PTM2 and f_{SUB}. If the SPI Slave Mode is selected then the clock will be supplied by an external Master device.

Bit 4 Unimplemented, read as "0"

Bit 3~2 **SIMDEB1~SIMDEB0**: I²C Debounce Time Selection

The SIMDEB1~SIMDEB0 bits are only used in the I²C mode and the detailed definition is described in the I²C section.

Bit 1 **SIMEN**: SIM Enable Control
0: Disable
1: Enable

The bit is the overall on/off control for the SIM interface. When the SIMEN bit is cleared to zero to disable the SIM interface, the SDI, SDO, SCK and $\overline{SCS}$, or SDA and SCL lines will lose their SPI or I²C function and the SIM operating current will be reduced to a minimum value. When the bit is high the SIM interface is enabled. If the SIM is configured to operate as an SPI interface via the SIM2~SIM0 bits, the contents of the SPI control registers will remain at the previous settings when the SIMEN bit changes from low to high and should therefore be first initialised by the application program. If the SIM is configured to operate as an I²C interface via the SIM2~SIM0 bits and the SIMEN bit changes from low to high, the contents of the I²C control bits such as HTX and TXAK will remain at the previous settings and should therefore be first initialised by the application program while the relevant I²C flags such as HCF, HAAS, HBB, SRW and RXAK will be set to their default states.

Bit 0 **SIMICF**: SIM SPI slave mode Incomplete Transfer Flag
0: SIM SPI slave mode incomplete condition not occurred
1: SIM SPI slave mode incomplete condition occurred

This bit is only available when the SIM is configured to operate in an SPI slave mode. If the SPI operates in the slave mode with the SIMEN and CSEN bits both being set to 1 but the $\overline{SCS}$ line is pulled high by the external master device before the SPI data transfer is completely finished, the SIMICF bit will be set to 1 together with the TRF bit. When this condition occurs, the corresponding interrupt will occur if the interrupt function is enabled. However, the TRF bit will not be set to 1 if the SIMICF bit is set to 1 by software application program.

• **SIMC2 Register**

Bit	7	6	5	4	3	2	1	0
Name	D7	D6	CKPOLB	CKEG	MLS	CSEN	WCOL	TRF
R/W	R/W	R/W	R/W	R/W	R/W	R/W	R/W	R/W
POR	0	0	0	0	0	0	0	0

Bit 7~6 Undefined bits

These bits can be read or written by the application program.

Bit 5 **CKPOLB**: SPI clock line base condition selection

0: The SCK line will be high when the clock is inactive.
1: The SCK line will be low when the clock is inactive.

The CKPOLB bit determines the base condition of the clock line, if the bit is high, then the SCK line will be low when the clock is inactive. When the CKPOLB bit is low, then the SCK line will be high when the clock is inactive.

Bit 4 **CKEG**: SPI SCK clock active edge type selection

CKPOLB=0
0: SCK is high base level and data capture at SCK rising edge
1: SCK is high base level and data capture at SCK falling edge

CKPOLB=1
0: SCK is low base level and data capture at SCK falling edge
1: SCK is low base level and data capture at SCK rising edge

The CKEG and CKPOLB bits are used to setup the way that the clock signal outputs and inputs data on the SPI bus. These two bits must be configured before data transfer is executed otherwise an erroneous clock edge may be generated. The CKPOLB bit determines the base condition of the clock line, if the bit is high, then the SCK line will be low when the clock is inactive. When the CKPOLB bit is low, then the SCK line will be high when the clock is inactive. The CKEG bit determines active clock edge type which depends upon the condition of CKPOLB bit.

Bit 3 **MLS**: SPI data shift order

0: LSB first
1: MSB first

This is the data shift select bit and is used to select how the data is transferred, either MSB or LSB first. Setting the bit high will select MSB first and low for LSB first.

Bit 2 **CSEN**: SPI $\overline{\text{SCS}}$ pin control

0: Disable
1: Enable

The CSEN bit is used as an enable/disable for the $\overline{\text{SCS}}$ pin. If this bit is low, then the $\overline{\text{SCS}}$ pin will be disabled and placed into a floating condition. If the bit is high, the $\overline{\text{SCS}}$ pin will be enabled and used as a select pin.

Bit 1 **WCOL**: SPI write collision flag

0: No collision
1: Collision

The WCOL flag is used to detect whether a data collision has occurred or not. If this bit is high, it means that data has been attempted to be written to the SIMD register during a data transfer operation. This writing operation will be ignored if data is being transferred. This bit can be cleared by the application program.

Bit 0 **TRF**: SPI Transmit/Receive complete flag

0: SPI data is being transferred
1: SPI data transfer is completed

The TRF bit is the Transmit/Receive Complete flag and is set to 1 automatically when an SPI data transfer is completed, but must cleared to 0 by the application program. It can be used to generate an interrupt.

SPI Communication

After the SPI interface is enabled by setting the SIMEN bit high, then in the Master Mode, when data is written to the SIMD register, transmission/reception will begin simultaneously. When the data transfer is complete, the TRF flag will be set automatically, but must be cleared using the application program. In the Slave Mode, when the clock signal from the master has been received, any data in the SIMD register will be transmitted and any data on the SDI pin will be shifted into the SIMD register. The master should output a $\overline{SCS}$ signal to enable the slave devices before a clock signal is provided. The slave data to be transferred should be well prepared at the appropriate moment relative to the SCK signal depending upon the configurations of the CKPOLB bit and CKEG bit. The accompanying timing diagram shows the relationship between the slave data and SCK signal for various configurations of the CKPOLB and CKEG bits.

The SPI Master mode will continue to function if the SPI clock is running.

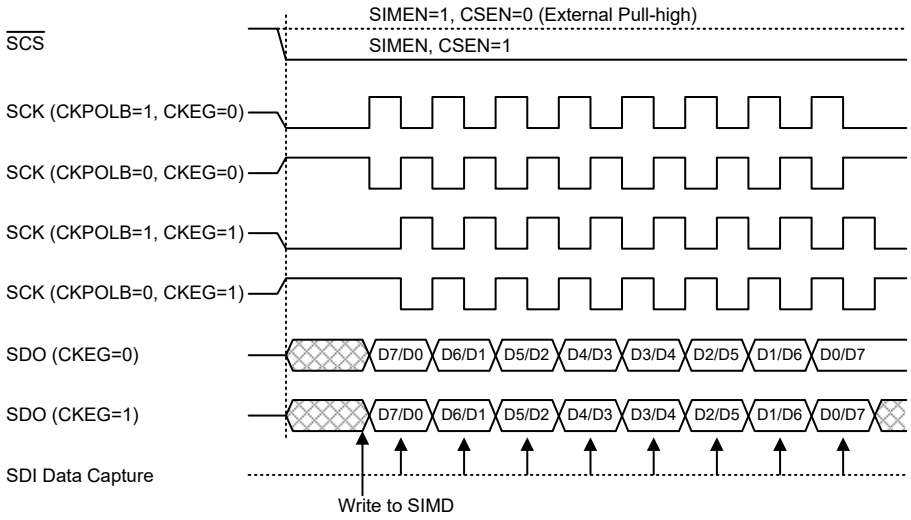

SPI Master Mode Timing

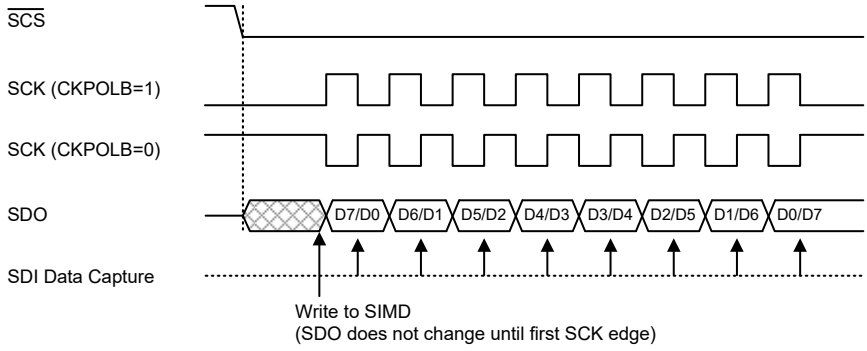

SPI Slave Mode Timing – CKEG=0

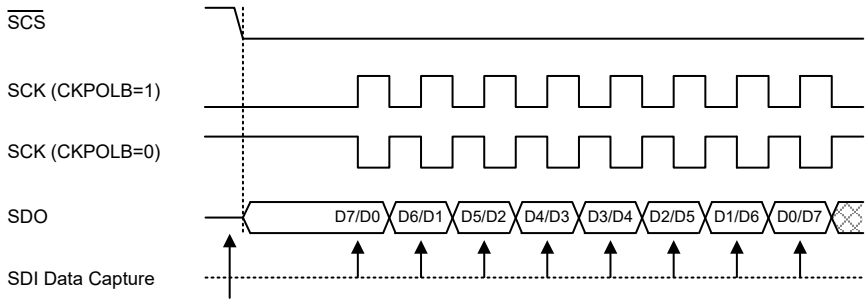

Write to SIMD
(SDO changes as soon as writing occurs; SDO is floating if $\overline{SCS}$=1)

Note: For SPI slave mode, if SIMEN=1 and CSEN=0, SPI is always enabled and ignores the $\overline{SCS}$ level.

SPI Slave Mode Timing – CKEG=1

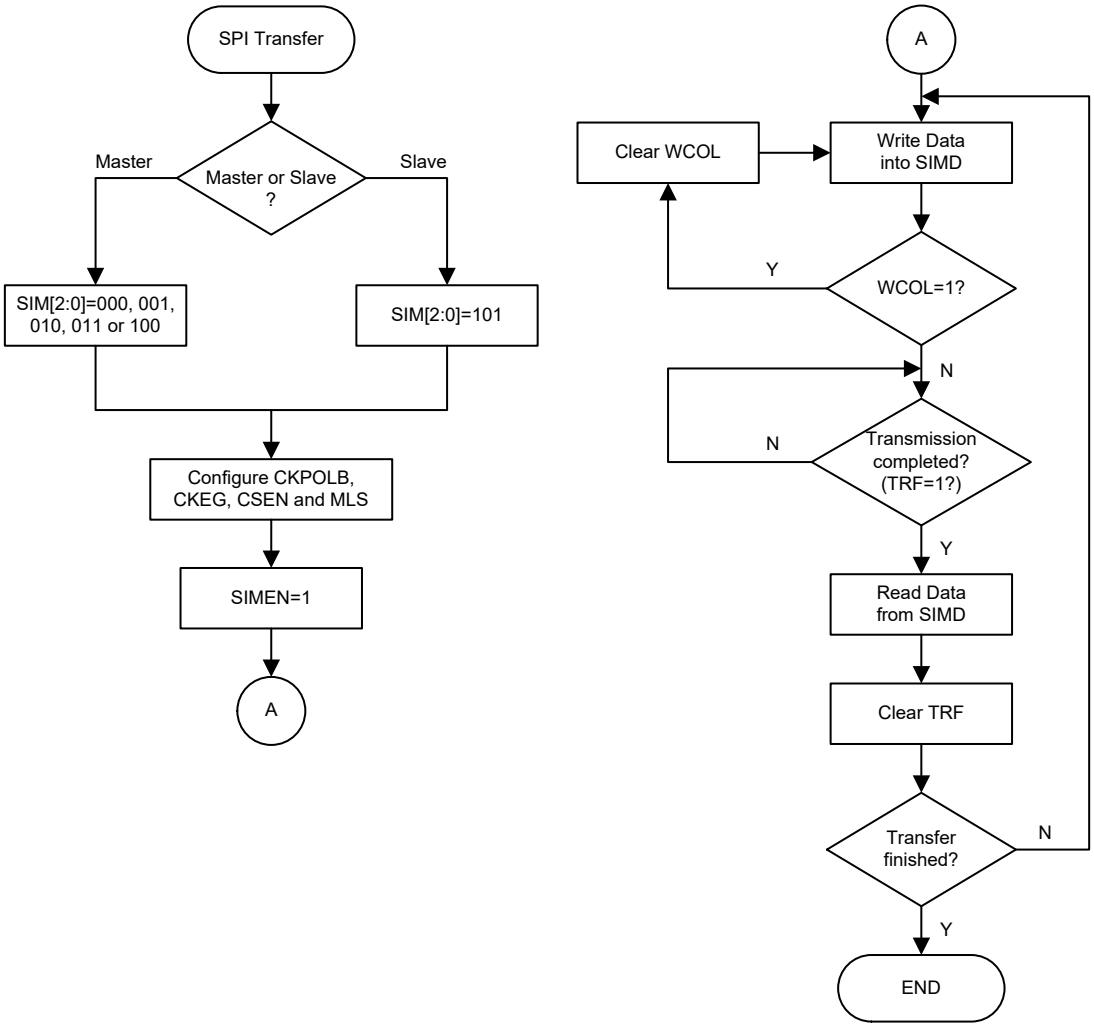

SPI Transfer Control Flow Chart

SPI Bus Enable/Disable

To enable the SPI bus, set CSEN=1 and $\overline{SCS}$=0, then wait for data to be written into the SIMD (TXRX buffer) register. For the Master Mode, after data has been written to the SIMD (TXRX buffer) register, then transmission or reception will start automatically. When all the data has been transferred, the TRF bit should be set. For the Slave Mode, when clock pulses are received on SCK, data in the TXRX buffer will be shifted out or data on SDI will be shifted in.

When the SPI bus is disabled, the SCK, SDI, SDO and $\overline{SCS}$ can become I/O pins or other pin-shared functions using the corresponding pin-shared control bits.

SPI Operation Steps

All communication is carried out using the 4-line interface for either Master or Slave Mode.

The CSEN bit in the SIMC2 register controls the overall function of the SPI interface. Setting this bit high will enable the SPI interface by allowing the $\overline{SCS}$ line to be active, which can then be used to control the SPI interface. If the CSEN bit is low, the SPI interface will be disabled and the $\overline{SCS}$ line will be in a floating condition and can therefore not be used for control of the SPI interface. If the CSEN bit and the SIMEN bit in the SIMC0 are set high, this will place the SDI line in a floating condition and the SDO line high. If in Master Mode the SCK line will be either high or low depending upon the clock polarity selection bit CKPOLB in the SIMC2 register. If in Slave Mode the SCK line will be in a floating condition. If the SIMEN bit is low, then the bus will be disabled and the $\overline{SCS}$, SDI, SDO and SCK will all become I/O pins or the other functions using the corresponding pin-shared control bits. In the Master Mode the Master will always generate the clock signal. The clock and data transmission will be initiated after data has been written into the SIMD register. In the Slave Mode, the clock signal will be received from an external master device for both data transmission and reception. The following sequences show the order to be followed for data transfer in both Master and Slave Mode.

Master Mode

- Step 1
  Select the SPI Master mode and clock source using the SIM2~SIM0 bits in the SIMC0 control register.
- Step 2
  Setup the CSEN bit and setup the MLS bit to choose if the data is MSB or LSB first, this setting must be the same with the Slave devices.
- Step 3
  Setup the SIMEN bit in the SIMC0 control register to enable the SPI interface.
- Step 4
  For write operations: write the data to the SIMD register, which will actually place the data into the TXRX buffer. Then use the SCK and SDO lines to output the data. After this, go to step 5.
  For read operations: the data transferred in on the SDI line will be stored in the TXRX buffer until all the data has been received at which point it will be latched into the SIMD register.
- Step 5
  Check the WCOL bit if set high then a collision error has occurred so return to step 4. If equal to zero then go to the following step.
- Step 6
  Check the TRF bit or wait for an SIM SPI serial bus interrupt.
- Step 7
  Read data from the SIMD register.
- Step 8
  Clear TRF.
- Step 9
  Go to step 4.

Slave Mode

- Step 1
  Select the SPI Slave mode using the SIM2~SIM0 bits in the SIMC0 control register
- Step 2
  Setup the CSEN bit and setup the MLS bit to choose if the data is MSB or LSB first, this setting must be the same with the Master devices.
- Step 3
  Setup the SIMEN bit in the SIMC0 control register to enable the SPI interface.
- Step 4
  For write operations: write the data to the SIMD register, which will actually place the data into the TXRX buffer. Then wait for the master clock SCK and $\overline{SCS}$ signal. After this, go to step 5.
  For read operations: the data transferred in on the SDI line will be stored in the TXRX buffer until all the data has been received at which point it will be latched into the SIMD register.
- Step 5
  Check the WCOL bit if set high then a collision error has occurred so return to step 4. If equal to zero then go to the following step.
- Step 6
  Check the TRF bit or wait for an SIM SPI serial bus interrupt.
- Step 7
  Read data from the SIMD register.
- Step 8
  Clear TRF.
- Step 9
  Go to step 4.

Error Detection

The WCOL bit in the SIMC2 register is provided to indicate errors during data transfer. The bit is set by the SPI serial Interface but must be cleared by the application program. This bit indicates that a data collision has occurred which happens if a write to the SIMD register takes place during a data transfer operation and will prevent the write operation from continuing.

I²C Interface

The I²C interface is used to communicate with external peripheral devices such as sensors, EEPROM memory etc. Originally developed by Philips, it is a two line low speed serial interface for synchronous serial data transfer. The advantage of only two lines for communication, relatively simple communication protocol and the ability to accommodate multiple devices on the same bus has made it an extremely popular interface type for many applications.

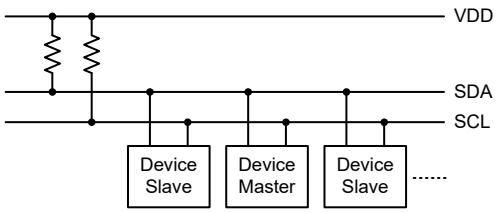

I²C Master/Slave Bus Connection

I²C Interface Operation

The I²C serial interface is a two line interface, a serial data line, SDA, and serial clock line, SCL. As many devices may be connected together on the same bus, their outputs are both open drain types. For this reason it is necessary that external pull-high resistors are connected to these outputs. Note that no chip select line exists, as each device on the I²C bus is identified by a unique address which will be transmitted and received on the I²C bus.

When two devices communicate with each other on the bidirectional I²C bus, one is known as the master device and one as the slave device. Both master and slave can transmit and receive data; however, it is the master device that has overall control of the bus. For the device, which only operates in slave mode, there are two methods of transferring data on the I²C bus, the slave transmit mode and the slave receive mode. The pull-high control function pin-shared with SCL/SDA pin is still applicable even if I²C device is activated and the related internal pull-high function could be controlled by its corresponding pull-high control register.

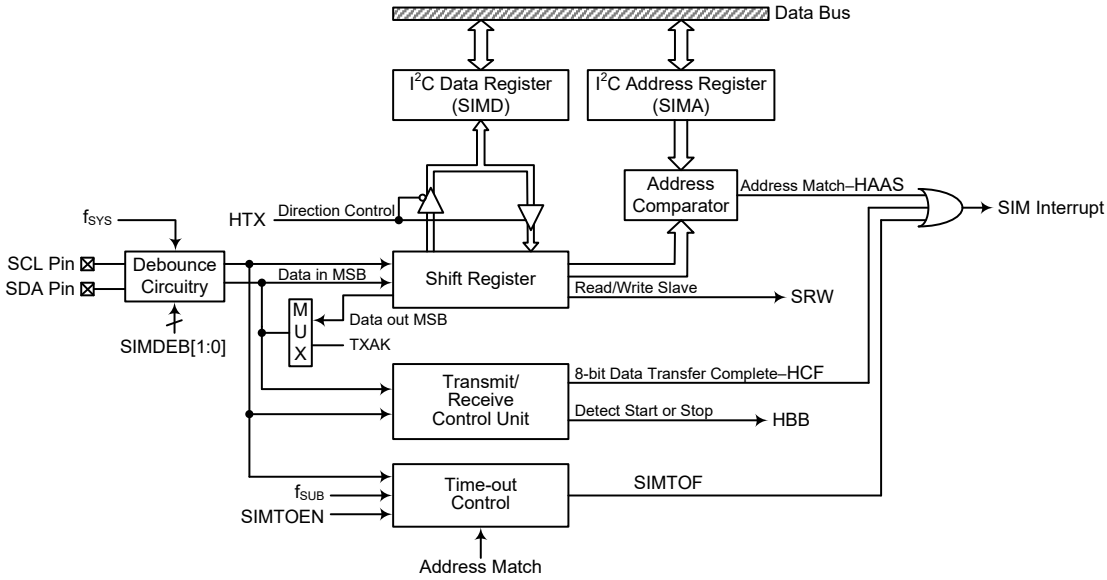

I²C Interface Block Diagram

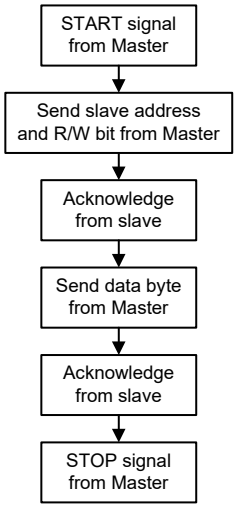

I²C Interface Operation

The SIMDEB1 and SIMDEB0 bits determine the debounce time of the I²C interface. This uses the system clock to in effect add a debounce time to the external clock to reduce the possibility of glitches on the clock line causing erroneous operation. The debounce time, if selected, can be chosen to be either 2 or 4 system clocks. To achieve the required I²C data transfer speed, there exists a relationship between the system clock, f_{SYS}, and the I²C debounce time. For either the I²C Standard or Fast mode operation, users must take care of the selected system clock frequency and the configured debounce time to match the criterion shown in the following table.

I²C Debounce Time Selection	I²C Standard Mode (100kHz)	I²C Fast Mode (400kHz)
No Debounce	f_{SYS}>2MHz	f_{SYS}>4MHz
2 system clock debounce	f_{SYS}>4MHz	f_{SYS}>8MHz
4 system clock debounce	f_{SYS}>4MHz	f_{SYS}>8MHz

I²C Minimum f_{SYS} Frequency RequirementI²C Registers

There are three control registers associated with the I²C bus, SIMC0, SIMC1 and SIMTOC, one address register SIMA and one data register, SIMD.

Register Name	Bit							
	7	6	5	4	3	2	1	0
SIMC0	SIM2	SIM1	SIM0	—	SIMDEB1	SIMDEB0	SIMEN	SIMICF
SIMC1	HCF	HAAS	HBB	HTX	TXAK	SRW	IAMWU	RXAK
SIMA	SIMA6	SIMA5	SIMA4	SIMA3	SIMA2	SIMA1	SIMA0	D0
SIMD	D7	D6	D5	D4	D3	D2	D1	D0
SIMTOC	SIMTOEN	SIMTOF	SIMTOS5	SIMTOS4	SIMTOS3	SIMTOS2	SIMTOS1	SIMTOS0

I²C Register List

I²C Data Register

The SIMD register is used to store the data being transmitted and received. The same register is used by both the SPI and I²C functions. Before the device writes data to the I²C bus, the actual data to be transmitted must be placed in the SIMD register. After the data is received from the I²C bus, the device can read it from the SIMD register. Any transmission or reception of data from the I²C bus must be made via the SIMD register.

- **SIMD Register**

Bit	7	6	5	4	3	2	1	0
Name	D7	D6	D5	D4	D3	D2	D1	D0
R/W	R/W	R/W	R/W	R/W	R/W	R/W	R/W	R/W
POR	x	x	x	x	x	x	x	x

"x": unknown

Bit 7~0 **D7~D0**: SIM data register bit 7 ~ bit 0

I²C Address Register

The SIMA register is also used by the SPI interface but has the name SIMC2. The SIMA register is the location where the 7-bit slave address of the slave device is stored. Bits 7~1 of the SIMA register define the device slave address. Bit 0 is not implemented.

When a master device, which is connected to the I²C bus, sends out an address, which matches the slave address in the SIMA register, the slave device will be selected. Note that the SIMA register is the same register address as SIMC2 which is used by the SPI interface.

• **SIMA Register**

Bit	7	6	5	4	3	2	1	0
Name	SIMA6	SIMA5	SIMA4	SIMA3	SIMA2	SIMA1	SIMA0	D0
R/W	R/W	R/W	R/W	R/W	R/W	R/W	R/W	R/W
POR	0	0	0	0	0	0	0	0

Bit 7~1 **SIMA6~SIMA0**: I²C slave address
SIMA6~SIMA0 is the I²C slave address bit 6 ~ bit 0.

Bit 0 **D0**: Reserved bit, can be read or written

I²C Control Registers

There are three control registers for the I²C interface, SIMC0, SIMC1 and SIMTOC. The register SIMC0 is used to control the enable/disable function and to select the I²C slave mode and debounce time. The SIMC1 register contains the relevant flags which are used to indicate the I²C communication status. Another register, SIMTOC, is used to control the I²C time-out function and is described in the corresponding section.

• **SIMC0 Register**

Bit	7	6	5	4	3	2	1	0
Name	SIM2	SIM1	SIM0	—	SIMDEB1	SIMDEB0	SIMEN	SIMICF
R/W	R/W	R/W	R/W	—	R/W	R/W	R/W	R/W
POR	1	1	1	—	0	0	0	0

Bit 7~5 **SIM2~SIM0**: SIM Operating Mode Control
000: SPI master mode; SPI clock is $f_{SYS}/4$
001: SPI master mode; SPI clock is $f_{SYS}/16$
010: SPI master mode; SPI clock is $f_{SYS}/64$
011: SPI master mode; SPI clock is f_{SUB}
100: SPI master mode; SPI clock is PTM2 CCRP match frequency/2
101: SPI slave mode
110: I²C slave mode
111: Non SIM function

These bits setup the overall operating mode of the SIM function. As well as selecting if the I²C or SPI function, they are used to control the SPI Master/Slave selection and the SPI Master clock frequency. The SPI clock is a function of the system clock but can also be chosen to be sourced from PTM2 and f_{SUB}. If the SPI Slave Mode is selected then the clock will be supplied by an external Master device.

Bit 4 Unimplemented, read as "0"

Bit 3~2 **SIMDEB1~SIMDEB0**: I²C Debounce Time Selection
00: No debounce
01: 2 system clock debounce
1x: 4 system clock debounce

These bits are used to select the I²C debounce time when the SIM is configured as the I²C interface function by setting the SIM2~SIM0 bits to "110".

Bit 1 **SIMEN**: SIM Enable Control
0: Disable
1: Enable

The bit is the overall on/off control for the SIM interface. When the SIMEN bit is cleared to zero to disable the SIM interface, the SDI, SDO, SCK and $\overline{SCS}$, or SDA and SCL lines will lose their SPI or I²C function and the SIM operating current will be reduced to a minimum value. When the bit is high the SIM interface is enabled. The SIM configuration option must have first enabled the SIM interface for this bit to be effective. If the SIM is configured to operate as an SPI interface via the SIM2~SIM0 bits, the contents of the SPI control registers will remain at the previous settings when

the SIMEN bit changes from low to high and should therefore be first initialised by the application program. If the SIM is configured to operate as an I²C interface via the SIM2~SIM0 bits and the SIMEN bit changes from low to high, the contents of the I²C control bits such as HTX and TXAK will remain at the previous settings and should therefore be first initialised by the application program while the relevant I²C flags such as HCF, HAAS, HBB, SRW and RXAK will be set to their default states.

Bit 0 **SIMICF**: SIM SPI Incomplete Flag

The SIMICF bit is only used in the SPI mode and the detailed definition is described in the SPI section.

• SIMC1 Register

Bit	7	6	5	4	3	2	1	0
Name	HCF	HAAS	HBB	HTX	TXAK	SRW	IAMWU	RXAK
R/W	R	R	R	R/W	R/W	R	R/W	R
POR	1	0	0	0	0	0	0	1

Bit 7 **HCF**: I²C Bus data transfer completion flag
0: Data is being transferred
1: Completion of an 8-bit data transfer

The HCF flag is the data transfer completion flag. This flag will be zero when data is being transferred. Upon completion of an 8-bit data transfer the flag will go high and an interrupt will be generated.

Bit 6 **HAAS**: I²C Bus data transfer completion flag
0: Not address match
1: Address match

The HAAS flag is the address match flag. This flag is used to determine if the slave device address is the same as the master transmit address. If the addresses match then this bit will be high, if there is no match then the flag will be low.

Bit 5 **HBB**: I²C Bus busy flag
0: I²C Bus is not busy
1: I²C Bus is busy

The HBB flag is the I²C busy flag. This flag will be “1” when the I²C bus is busy which will occur when a START signal is detected. The flag will be cleared to “0” when the bus is free which will occur when a STOP signal is detected.

Bit 4 **HTX**: I²C slave device transmitter/receiver selection
0: Slave device is the receiver
1: Slave device is the transmitter

Bit 3 **TXAK**: I²C bus transmit acknowledge flag
0: Slave sends acknowledge flag
1: Slave does not send acknowledge flag

The TXAK flag is the transmit acknowledge flag. After the slave device has received 8 bits of data, this flag will be transmitted to the bus on the 9th clock from the slave device. The slave device must always set the TXAK bit to “0” before further data is received.

Bit 2 **SRW**: I²C slave read/write flag
0: Slave device should be in receive mode
1: Slave device should be in transmit mode

The SRW flag is the I²C Slave Read/Write flag. This flag determines whether the master device wishes to transmit or receive data from the I²C bus. When the transmitted address and slave address is match, that is when the HAAS flag is set high, the slave device will check the SRW flag to determine whether it should be in transmit mode or receive mode. If the SRW flag is high, the master is requesting to read data from the bus, so the slave device should be in transmit mode. When the SRW flag is zero, the master will write data to the bus, therefore the slave device should be in receive mode to read this data.

Bit 1 **IAMWU**: I²C Address Match Wake-Up control
0: Disable
1: Enable – must be cleared by the application program after wake-up
This bit should be set to 1 to enable the I²C address match wake-up from the SLEEP or IDLE Mode. If the IAMWU bit has been set before entering either the SLEEP or IDLE mode to enable the I²C address match wake-up, then this bit must be cleared by the application program after wake-up to ensure correction device operation.

Bit 0 **RXAK**: I²C bus receive acknowledge flag
0: Slave receives acknowledge flag
1: Slave does not receive acknowledge flag
The RXAK flag is the receiver acknowledge flag. When the RXAK flag is "0", it means that a acknowledge signal has been received at the 9th clock, after 8 bits of data have been transmitted. When the slave device is in the transmit mode, the slave device checks the RXAK flag to determine if the master receiver wishes to receive the next byte. The slave transmitter will therefore continue sending out data until the RXAK flag is "1". When this occurs, the slave transmitter will release the SDA line to allow the master to send a STOP signal to release the I²C Bus.

I²C Bus Communication

Communication on the I²C bus requires four separate steps, a START signal, a slave device address transmission, a data transmission and finally a STOP signal. When a START signal is placed on the I²C bus, all devices on the bus will receive this signal and be notified of the imminent arrival of data on the bus. The first seven bits of the data will be the slave address with the first bit being the MSB. If the address of the slave device matches that of the transmitted address, the HAAS bit in the SIMC1 register will be set and an SIM interrupt will be generated. After entering the interrupt service routine, the slave device must first check the condition of the HAAS and SIMTOF bits to determine whether the interrupt source originates from either an address match or the completion of an 8-bit data transfer or the I²C bus time-out occurrence. During a data transfer, note that after the 7-bit slave address has been transmitted, the following bit, which is the 8th bit, is the read/write bit whose value will be placed in the SRW bit. This bit will be checked by the slave device to determine whether to go into transmit or receive mode. Before any transfer of data to or from the I²C bus, the microcontroller must initialise the bus; the following are steps to achieve this:

- Step 1
  Set the SIM2~SIM0 bits to "110" and SIMEN bit to "1" in the SIMC0 register to enable the I²C bus.
- Step 2
  Write the slave address of the device to the I²C bus address register SIMA.
- Step 3
  Set the SIME interrupt enable bit of the interrupt control register to enable the SIM interrupt.

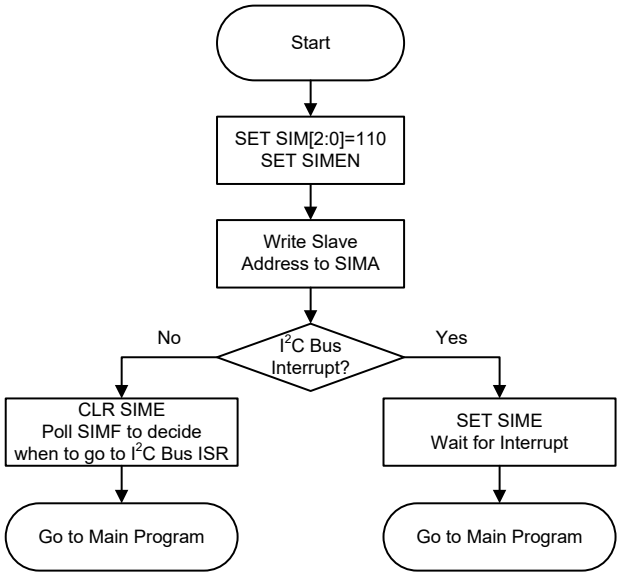

I²C Bus Initialisation Flow Chart

I²C Bus Start Signal

The START signal can only be generated by the master device connected to the I²C bus and not by the slave device. This START signal will be detected by all devices connected to the I²C bus. When detected, this indicates that the I²C bus is busy and therefore the HBB bit will be set. A START condition occurs when a high to low transition on the SDA line takes place when the SCL line remains high.

I²C Slave Address

The transmission of a START signal by the master will be detected by all devices on the I²C bus. To determine which slave device the master wishes to communicate with, the address of the slave device will be sent out immediately following the START signal. All slave devices, after receiving this 7-bit address data, will compare it with their own 7-bit slave address. If the address sent out by the master matches the internal address of the microcontroller slave device, then an internal SIM I²C bus interrupt signal will be generated. The next bit following the address, which is the 8th bit, defines the read/write status and will be saved to the SRW bit of the SIMC1 register. The slave device will then transmit an acknowledge bit, which is a low level, as the 9th bit. The slave device will also set the status flag HAAS when the addresses match.

As an SIM I²C bus interrupt can come from three sources, when the program enters the interrupt subroutine, the HAAS and SIMTOF bits should be examined to see whether the interrupt source has come from either a matching slave address, the completion of a data byte transfer or the I²C bus time-out occurrence. When a slave address is matched, the device must be placed in either the transmit mode and then write data to the SIMD register, or in the receive mode where it must implement a dummy read from the SIMD register to release the SCL line.

I²C Bus Read/Write Signal

The SRW bit in the SIMC1 register defines whether the master device wishes to read data from the I²C bus or write data to the I²C bus. The slave device should examine this bit to determine if it is to be a transmitter or a receiver. If the SRW flag is “1” then this indicates that the master device wishes to read data from the I²C bus, therefore the slave device must be setup to send data to the I²C bus as a transmitter. If the SRW flag is “0” then this indicates that the master wishes to send data to the I²C bus, therefore the slave device must be setup to read data from the I²C bus as a receiver.

I²C Bus Slave Address Acknowledge Signal

After the master has transmitted a calling address, any slave device on the I²C bus, whose own internal address matches the calling address, must generate an acknowledge signal. The acknowledge signal will inform the master that a slave device has accepted its calling address. If no acknowledge signal is received by the master then a STOP signal must be transmitted by the master to end the communication. When the HAAS flag is high, the addresses have matched and the slave device must check the SRW flag to determine if it is to be a transmitter or a receiver. If the SRW flag is high, the slave device should be setup to be a transmitter so the HTX bit in the SIMC1 register should be set to "1". If the SRW flag is low, then the microcontroller slave device should be setup as a receiver and the HTX bit in the SIMC1 register should be cleared to "0".

I²C Bus Data and Acknowledge Signal

The transmitted data is 8-bit wide and is transmitted after the slave device has acknowledged receipt of its slave address. The order of serial bit transmission is the MSB first and the LSB last. After receipt of 8 bits of data, the receiver must transmit an acknowledge signal, level "0", before it can receive the next data byte. If the slave transmitter does not receive an acknowledge bit signal from the master receiver, then the slave transmitter will release the SDA line to allow the master to send a STOP signal to release the I²C Bus. The corresponding data will be stored in the SIMD register. If setup as a transmitter, the slave device must first write the data to be transmitted into the SIMD register. If setup as a receiver, the slave device must read the transmitted data from the SIMD register.

When the slave receiver receives the data byte, it must generate an acknowledge bit, known as TXAK, on the 9th clock. The slave device, which is setup as a transmitter will check the RXAK bit in the SIMC1 register to determine if it is to send another data byte, if not then it will release the SDA line and await the receipt of a STOP signal from the master.

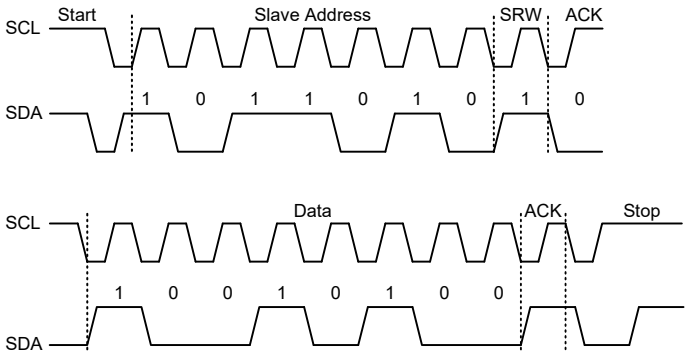

S=Start (1 bit)
SA=Slave Address (7 bits)
SR=SRW bit (1 bit)
M=Slave device send acknowledge bit (1 bit)
D=Data (8 bits)
A=ACK (RXAK bit for transmitter, TXAK bit for receiver, 1 bit)
P=Stop (1 bit)

S	SA	SR	M	D	A	D	A	……	S	SA	SR	M	D	A	D	A	……	P

Note: When a slave address is matched, the device must be placed in either the transmit mode and then write data to the SIMD register, or in the receive mode where it must implement a dummy read from the SIMD register to release the SCL line.

I²C Communication Timing Diagram

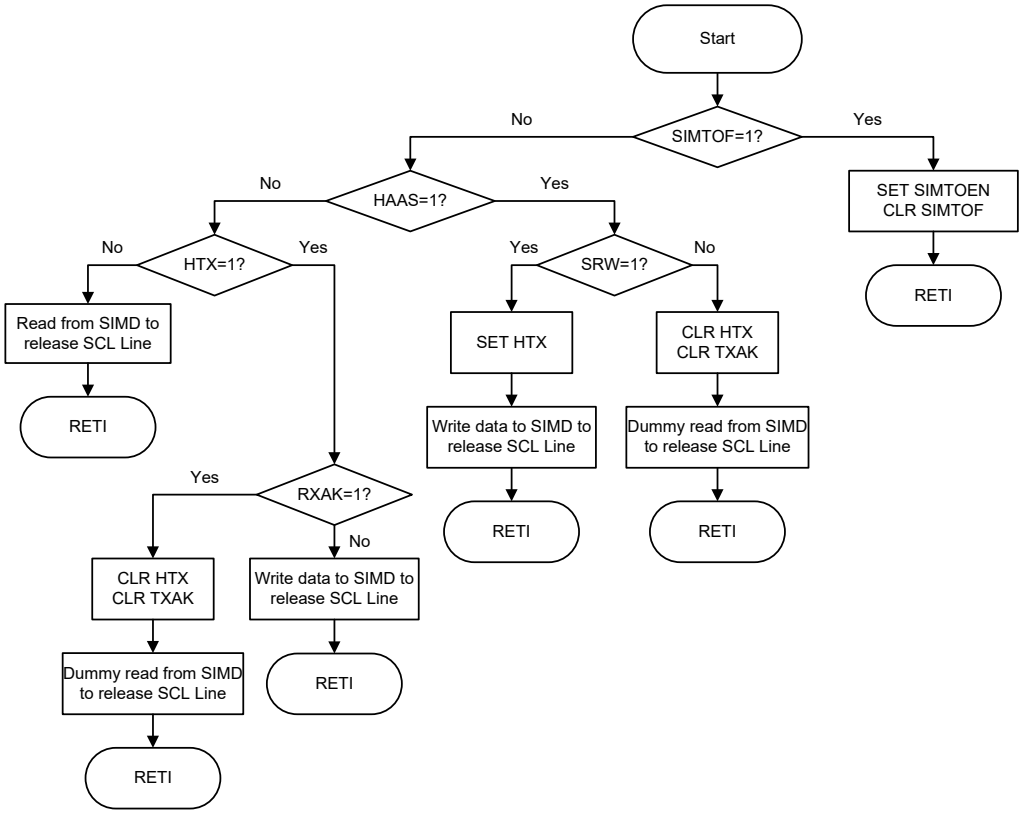

I²C Bus ISR Flow Chart

I²C Time-out Control

In order to reduce the I²C lockup problem due to reception of erroneous clock sources, a time-out function is provided. If the clock source connected to the I²C bus is not received for a while, then the I²C circuitry and registers will be reset after a certain time-out period. The time-out counter starts to count on an I²C bus "START" & "address match" condition, and is cleared by an SCL falling edge. Before the next SCL falling edge arrives, if the time elapsed is greater than the time-out period specified by the SIMTOC register, then a time-out condition will occur. The time-out function will stop when an I²C "STOP" condition occurs.

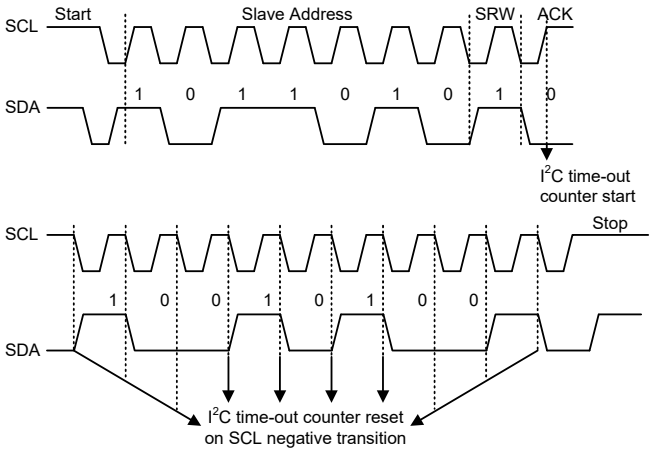

I²C Time-out

When an I²C time-out counter overflow occurs, the counter will stop and the SIMTOEN bit will be cleared to zero and the SIMTOF bit will be set high to indicate that a time-out condition has occurred. The time-out condition will also generate an interrupt which uses the SIM interrupt vector. When an I²C time-out occurs, the I²C internal circuitry will be reset and the registers will be reset into the following condition:

Registers	After I²C Time-out
SIMD, SIMA, SIMC0	No change
SIMC1	Reset to POR condition

I²C Registers after Time-out

The SIMTOF flag can be cleared by the application program. There are 64 time-out period selections which can be selected using the SIMTOS5~SIMTOS0 bits in the SIMTOC register. The time-out duration is calculated by the formula: $((1\sim64)\times(32/f_{SUB}))$. This gives a time-out period which ranges from about 1ms to 64ms.

SIMTOC Register

Bit	7	6	5	4	3	2	1	0
Name	SIMTOEN	SIMTOF	SIMTOS5	SIMTOS4	SIMTOS3	SIMTOS2	SIMTOS1	SIMTOS0
R/W	R/W	R/W	R/W	R/W	R/W	R/W	R/W	R/W
POR	0	0	0	0	0	0	0	0

Bit 7 **SIMTOEN**: SIM I²C Time-out control
0: Disable
1: Enable

Bit 6 **SIMTOF**: SIM I²C Time-out flag
0: No time-out occurred
1: Time-out occurred

Bit 5~0 **SIMTOS5~SIMTOS0**: SIM I²C Time-out period selection
I²C Time-out clock source is $f_{SUB}/32$.
I²C Time-out period is equal to $(SIMTOS[5:0]+1)\times(32/f_{SUB})$.

UART Interface

The devices contain an integrated full-duplex or half-duplex asynchronous serial communications UART interface that enables communication with external devices that contain a serial interface. The UART function has many features and can transmit and receive data serially by transferring a frame of data with eight or nine data bits per transmission as well as being able to detect errors when the data is overwritten or incorrectly framed. The UART function possesses its own internal interrupt which can be used to indicate when a reception occurs or when a transmission terminates.

The integrated UART function contains the following features:

- Full-duplex or half-duplex (single wire mode), asynchronous communication
- 8 or 9 bits character length
- Even, odd, mark, space or no parity options
- One or two stop bits configurable for receiver
- Two stop bits for transmitter
- Baud rate generator with 16-bit prescaler
- Parity, framing, noise and overrun error detection
- Support for interrupt on address detect (last character bit=1)

- Separately enabled transmitter and receiver
- 4-byte Deep FIFO Receive Data Buffer
- 1-byte Deep FIFO Transmit Data Buffer
- RX/TX pin wake-up function
- Transmit and receive interrupts
- Interrupts can be triggered by the following conditions:
  - Transmitter Empty
  - Transmitter Idle
  - Receiver reaching FIFO trigger level
  - Receiver Overrun
  - Address Mode Detect

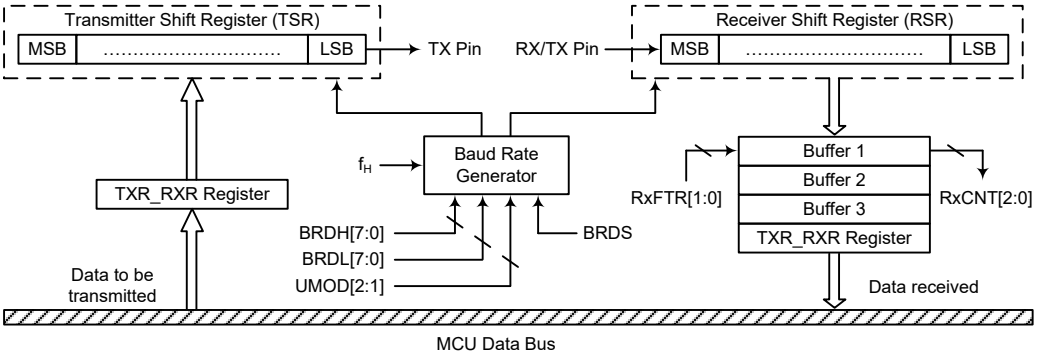

UART Data Transfer Block Diagram – SWM=0

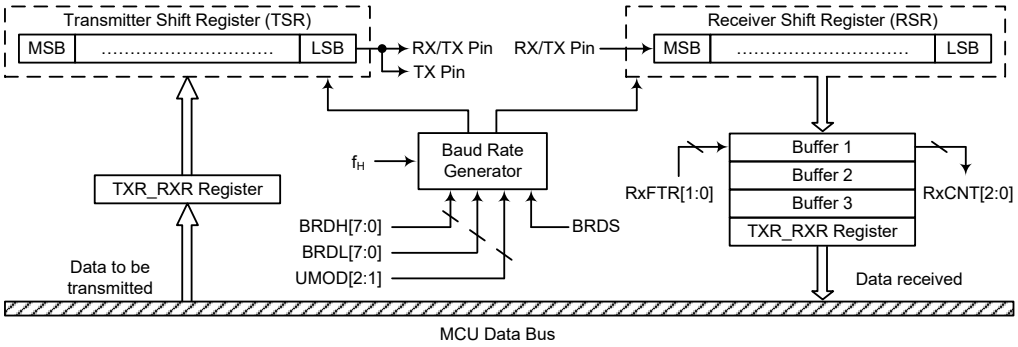

UART Data Transfer Block Diagram – SWM=1

UART External Pins

To communicate with an external serial interface, the internal UART has two external pins known as TX and RX/TX, which are pin-shared with I/O or other pin functions. The TX and RX/TX pin function should first be selected by the corresponding pin-shared function selection register before the UART function is used. Along with the UARTEN bit, the TXEN and RXEN bits, if set, will configure these pins to transmitter output and receiver input conditions. At this time the internal pull-high resistor related to the transmitter output pin will be disabled, while the internal pull-high resistor related to the receiver input pin is controlled by the corresponding I/O pull-high function control bit. When the TX or RX/TX pin function is disabled by clearing the UARTEN, TXEN or

RXEN bit, the TX or RX/TX pin will be set to a floating state. At this time whether the internal pull-high resistor is connected to the TX or RX/TX pin or not is determined by the corresponding I/O pull-high function control bit.

UART Single Wire Mode

The UART function also supports a Single Wire Mode communication which is selected using the SWM bit in the UCR3 register. When the SWM bit is set high, the UART function will be in the single wire mode. In the single wire mode, a single RX/TX pin can be used to transmit and receive data depending upon the corresponding control bits. When the RXEN bit is set high, the RX/TX pin is used as a receiver pin. When the RXEN bit is cleared to zero and the TXEN bit is set high, the RX/TX pin will act as a transmitter pin.

It is recommended not to set both the RXEN and TXEN bits high in the single wire mode. If both the RXEN and TXEN bits are set high, the RXEN bit will have the priority and the UART will act as a receiver.

It is important to note that the functional description in this UART chapter, which is described from the full-duplex communication standpoint, also applies to the half-duplex (single wire mode) communication except the pin usage. In the single wire mode, the TX pin mentioned in this chapter should be replaced by the RX/TX pin to understand the whole UART single wire mode function.

In the single wire mode, the data can also be transmitted on the TX pin in a transmission operation with proper software configurations. Therefore, the data will be output on the RX/TX and TX pins.

UART Data Transfer Scheme

The UART Data Transfer Block Diagram shows the overall data transfer structure arrangement for the UART. The actual data to be transmitted from the MCU is first transferred to the TXR_RXR register by the application program. The data will then be transferred to the Transmit Shift Register from where it will be shifted out, LSB first, onto the TX pin at a rate controlled by the Baud Rate Generator. Only the TXR_RXR register is mapped onto the MCU Data Memory, the Transmit Shift Register is not mapped and is therefore inaccessible to the application program.

Data to be received by the UART is accepted on the external RX/TX pin, from where it is shifted in, LSB first, to the Receiver Shift Register at a rate controlled by the Baud Rate Generator. When the shift register is full, the data will then be transferred from the shift register to the internal TXR_RXR register, where it is buffered and can be manipulated by the application program. Only the TXR_RXR register is mapped onto the MCU Data Memory, the Receiver Shift Register is not mapped and is therefore inaccessible to the application program.

It should be noted that the actual register for data transmission and reception only exists as a single shared register, TXR_RXR, in the Data Memory.

UART Status and Control Registers

There are nine control registers associated with the UART function. The SWM bit in the UCR3 register is used to enable/disable the UART Single Wire Mode. The USR, UCR1, UCR2, UFCR and RxCNT registers control the overall function of the UART, while the BRDH and BRDL registers control the Baud rate. The actual data to be transmitted and received on the serial interface is managed through the TXR_RXR data register.

Register Name	Bit							
	7	6	5	4	3	2	1	0
USR	PERR	NF	FERR	OERR	RIDLE	RXIF	TIDLE	TXIF
UCR1	UARTEN	BNO	PREN	PRT1	PRT0	TXBRK	RX8	TX8
UCR2	TXEN	RXEN	STOPS	ADDEN	WAKE	RIE	TIIE	TEIE
UCR3	—	—	—	—	—	—	—	SWM
TXR_RXR	TXRX7	TXRX6	TXRX5	TXRX4	TXRX3	TXRX2	TXRX1	TXRX0
BRDH	D7	D6	D5	D4	D3	D2	D1	D0
BRDL	D7	D6	D5	D4	D3	D2	D1	D0
UFCR	—	—	UMOD2	UMOD1	UMOD0	BRDS	RxFTR1	RxFTR0
RxCNT	—	—	—	—	—	D2	D1	D0

UART Register List

USR Register

The USR register is the status register for the UART, which can be read by the program to determine the present status of the UART. All flags within the USR register are read only. Further explanation on each of the flags is given below:

Bit	7	6	5	4	3	2	1	0
Name	PERR	NF	FERR	OERR	RIDLE	RXIF	TIDLE	TXIF
R/W	R	R	R	R	R	R	R	R
POR	0	0	0	0	1	0	1	1

Bit 7 **PERR**: Parity error flag
0: No parity error is detected
1: Parity error is detected

The PERR flag is the parity error flag. When this read only flag is “0”, it indicates a parity error has not been detected. When the flag is “1”, it indicates that the parity of the received word is incorrect. This error flag is applicable only if the parity is enabled and the parity type (odd, even, mark or space) is selected. The flag can also be cleared by a software sequence which involves a read to the status register USR followed by an access to the TXR_RXR data register.

Bit 6 **NF**: Noise flag
0: No noise is detected
1: Noise is detected

The NF flag is the noise flag. When this read only flag is “0”, it indicates no noise condition. When the flag is “1”, it indicates that the UART has detected noise on the receiver input. The NF flag is set during the same cycle as the RXIF flag but will not be set in the case of as overrun. The NF flag can be cleared by a software sequence which will involve a read to the status register USR followed by an access to the TXR_RXR data register.

Bit 5 **FERR**: Framing error flag
0: No framing error is detected
1: Framing error is detected

The FERR flag is the framing error flag. When this read only flag is “0”, it indicates that there is no framing error. When the flag is “1”, it indicates that a framing error has been detected for the current character. The flag can also be cleared by a software sequence which will involve a read to the status register USR followed by an access to the TXR_RXR data register.

Bit 4 **OERR**: Overrun error flag
0: No overrun error is detected
1: Overrun error is detected

The OERR flag is the overrun error flag which indicates when the receiver buffer has overflowed. When this read only flag is “0”, it indicates that there is no overrun error. When the flag is “1”, it indicates that an overrun error occurs which will inhibit further transfers to the TXR_RXR receive data register. The flag is cleared by a software sequence, which is a read to the status register USR followed by an access to the TXR_RXR data register.

Bit 3 **RIDLE**: Receiver status
0: Data reception is in progress (Data being received)
1: No data reception is in progress (Receiver is idle)

The RIDLE flag is the receiver status flag. When this read only flag is “0”, it indicates that the receiver is between the initial detection of the start bit and the completion of the stop bit. When the flag is “1”, it indicates that the receiver is idle. Between the completion of the stop bit and the detection of the next start bit, the RIDLE bit is “1” indicating that the UART receiver is idle and the RX/TX pin stays in logic high condition.

Bit 2 **RXIF**: Receive TXR_RXR data register status
0: TXR_RXR data register is empty
1: TXR_RXR data register has available data and Receiver FIFO trigger level is reached

The RXIF flag is the receive data register status flag. When this read only flag is “0”, it indicates that the TXR_RXR read data register is empty. When the flag is “1”, it indicates that the TXR_RXR read data register contains new data and Receiver FIFO trigger level is reached. When the contents of the shift register are transferred to the TXR_RXR register and Receiver FIFO trigger level is reached, an interrupt is generated if RIE=1 in the UCR2 register. If one or more errors are detected in the received word, the appropriate receive-related flags NF, FERR, and/or PERR are set within the same clock cycle. The RXIF flag is cleared when the USR register is read with RXIF set, followed by a read from the TXR_RXR register, and if the TXR_RXR register has no data available.

Bit 1 **TIDLE**: Transmission idle
0: Data transmission is in progress (Data being transmitted)
1: No data transmission is in progress (Transmitter is idle)

The TIDLE flag is known as the transmission complete flag. When this read only flag is “0”, it indicates that a transmission is in progress. This flag will be set high when the TXIF flag is “1” and when there is no transmit data or break character being transmitted. When TIDLE is equal to “1”, the TX pin becomes idle with the pin state in logic high condition. The TIDLE flag is cleared by reading the USR register with TIDLE set and then writing to the TXR_RXR register. The flag is not generated when a data character or a break is queued and ready to be sent.

Bit 0 **TXIF**: Transmit TXR_RXR data register status
0: Character is not transferred to the transmit shift register
1: Character has transferred to the transmit shift register (TXR_RXR data register is empty)

The TXIF flag is the transmit data register empty flag. When this read only flag is “0”, it indicates that the character is not transferred to the transmitter shift register. When the flag is “1”, it indicates that the transmitter shift register has received a character from the TXR_RXR data register. The TXIF flag is cleared by reading the UART status register (USR) with TXIF set and then writing to the TXR_RXR data register. Note that when the TXEN bit is set, the TXIF flag will also be set since the transmit data register is not yet full.

UCR1 Register

The UCR1 register together with the UCR2 and UCR3 register are the three UART control registers that are used to set the various options for the UART function, such as overall on/off control, parity control, data transfer bit length, single wire mode communication etc. Further explanation on each of the bits is given below:

Bit	7	6	5	4	3	2	1	0
Name	UARTEN	BNO	PREN	PRT1	PRT0	TXBRK	RX8	TX8
R/W	R/W	R/W	R/W	R/W	R/W	R/W	R	W
POR	0	0	0	0	0	0	x	0

"x": unknown

Bit 7 **UARTEN**: UART function enable control
0: Disable UART. TX and RX/TX pins are in a floating state
1: Enable UART. TX and RX/TX pins function as UART pins

The UARTEN bit is the UART enable bit. When this bit is equal to "0", the UART will be disabled and the RX/TX pin as well as the TX pin will be set in a floating state. When the bit is equal to "1", the UART will be enabled and the TX and RX/TX pins will function as defined by the SWM mode selection bit together with the TXEN and RXEN enable control bits.

When the UART is disabled, it will empty the buffer so any character remaining in the buffer will be discarded. In addition, the value of the baud rate counter will be reset. If the UART is disabled, all error and status flags will be reset. Also the TXEN, RXEN, TXBRK, RXIF, OERR, FERR, PERR and NF bits as well as the RxCNT register will be cleared, while the TIDLE, TXIF and RIDLE bits will be set. Other control bits in UCR1, UCR2, UCR3, UFCR, BRDH and BRDL registers will remain unaffected. If the UART is active and the UARTEN bit is cleared, all pending transmissions and receptions will be terminated and the module will be reset as defined above. When the UART is re-enabled, it will restart in the same configuration.

Bit 6 **BNO**: Number of data transfer bits selection
0: 8-bit data transfer
1: 9-bit data transfer

This bit is used to select the data length format, which can have a choice of either 8-bit or 9-bit format. When this bit is equal to "1", a 9-bit data length format will be selected. If the bit is equal to "0", then an 8-bit data length format will be selected. If 9-bit data length format is selected, then bits RX8 and TX8 will be used to store the 9th bit of the received and transmitted data respectively.

Note that the 9th bit of data if BNO=1, or the 8th bit of data if BNO=0, which is used as the parity bit, does not transfer to RX8 or TXRX7 respectively when the parity function is enabled.

Bit 5 **PREN**: Parity function enable control
0: Parity function is disabled
1: Parity function is enabled

This is the parity enable bit. When this bit is equal to "1", the parity function will be enabled. If the bit is equal to "0", then the parity function will be disabled. Replace the most significant bit position with a parity bit.

Bit 4~3 **PRT1~PRT0**: Parity type selection bits
00: Even parity for parity generator
01: Odd parity for parity generator
10: Mark parity for parity generator
11: Space parity for parity generator

These bits are the parity type selection bits. When these bits are equal to 00b, even parity type will be selected. If these bits are equal to 01b, then odd parity type will be selected. If these bits are equal to 10b, then a 1 (Mark) in the parity bit location will be selected. If these bits are equal to 11b, then a 0 (Space) in the parity bit location will be selected.

Bit 2 **TXBRK**: Transmit break character
0: No break character is transmitted
1: Break characters transmit
The TXBRK bit is the Transmit Break Character bit. When this bit is "0", there are no break characters and the TX pin operates normally. When the bit is "1", there are transmit break characters and the transmitter will send logic zeros. When this bit is equal to "1", after the buffered data has been transmitted, the transmitter output is held low for a minimum of a 13-bit length and until the TXBRK bit is reset.

Bit 1 **RX8**: Receive data bit 8 for 9-bit data transfer format (read only)
This bit is only used if 9-bit data transfers are used, in which case this bit location will store the 9th bit of the received data known as RX8. The BNO bit is used to determine whether data transfers are in 8-bit or 9-bit format.

Bit 0 **TX8**: Transmit data bit 8 for 9-bit data transfer format (write only)
This bit is only used if 9-bit data transfers are used, in which case this bit location will store the 9th bit of the transmitted data known as TX8. The BNO bit is used to determine whether data transfers are in 8-bit or 9-bit format.

UCR2 Register

The UCR2 register is the second of the two UART control registers and serves several purposes. One of its main functions is to control the basic enable/disable operation of the UART Transmitter and Receiver as well as enabling the various UART interrupt sources. The register also serves to control the receiver STOP bit number selection, receiver wake-up enable and the address detect enable. Further explanation on each of the bits is given below:

Bit	7	6	5	4	3	2	1	0
Name	TXEN	RXEN	STOPS	ADDEN	WAKE	RIE	TIIE	TEIE
R/W	R/W	R/W	R/W	R/W	R/W	R/W	R/W	R/W
POR	0	0	0	0	0	0	0	0

Bit 7 **TXEN**: UART Transmitter enabled control
0: UART transmitter is disabled
1: UART transmitter is enabled
The bit named TXEN is the Transmitter Enable Bit. When this bit is equal to "0", the transmitter will be disabled with any pending data transmissions being aborted. In addition the buffers will be reset. In this situation the TX pin will be set in a floating state.
If the TXEN bit is equal to "1" and the UARTEN bit is also equal to "1", the transmitter will be enabled and the TX pin will be controlled by the UART. Clearing the TXEN bit during a transmission will cause the data transmission to be aborted and will reset the transmitter. If this situation occurs, the TX pin will be set in a floating state.

Bit 6 **RXEN**: UART Receiver enabled control
0: UART receiver is disabled
1: UART receiver is enabled
The bit named RXEN is the Receiver Enable Bit. When this bit is equal to "0", the receiver will be disabled with any pending data receptions being aborted. In addition the receive buffers will be reset. In this situation the RX/TX pin will be set in a floating state. If the RXEN bit is equal to "1" and the UARTEN bit is also equal to "1", the receiver will be enabled and the RX/TX pin will be controlled by the UART. Clearing the RXEN bit during a reception will cause the data reception to be aborted and will reset the receiver. If this situation occurs, the RX/TX pin will be set in a floating state.

Bit 5 **STOPS**: Number of Stop bits selection for receiver
0: One stop bit format is used
1: Two stop bits format is used
This bit determines if one or two stop bits are to be used for receiver. When this bit is equal to "1", two stop bits are used. If this bit is equal to "0", then only one stop bit is used. Two stop bits are used for transmitter.

Bit 4 **ADDEN**: Address detect function enable control
0: Address detect function is disabled
1: Address detect function is enabled

The bit named ADDEN is the address detect function enable control bit. When this bit is equal to "1", the address detect function is enabled. When it occurs, if the 8th bit, which corresponds to TXRX7 if BNO=0 or the 9th bit, which corresponds to RX8 if BNO=1, has a value of "1", then the received word will be identified as an address, rather than data. If the corresponding interrupt is enabled, an interrupt request will be generated each time the received word has the address bit set, which is the 8th or 9th bit depending on the value of BNO. If the address bit known as the 8th or 9th bit of the received word is "0" with the address detect function being enabled, an interrupt will not be generated and the received data will be discarded.

Bit 3 **WAKE**: RX/TX pin wake-up UART function enable control
0: RX/TX pin wake-up UART function is disabled
1: RX/TX pin wake-up UART function is enabled

This bit is used to control the wake-up UART function when a falling edge on the RX/TX pin occurs. Note that this bit is only available when the UART clock (f_H) is switched off. There will be no RX/TX pin wake-up UART function if the UART clock (f_H) exists. If the WAKE bit is set to 1 as the UART clock (f_H) is switched off, a UART wake-up request will be initiated when a falling edge on the RX/TX pin occurs. When this request happens and the corresponding interrupt is enabled, an RX/TX pin wake-up UART interrupt will be generated to inform the MCU to wake up the UART function by switching on the UART clock (f_H) via the application program. Otherwise, the UART function cannot resume even if there is a falling edge on the RX/TX pin when the WAKE bit is cleared to 0.

Bit 2 **RIE**: Receiver interrupt enable control
0: Receiver related interrupt is disabled
1: Receiver related interrupt is enabled

This bit enables or disables the receiver interrupt. If this bit is equal to "1" and when the receiver overrun flag OERR or receive data available flag RXIF is set, the UART interrupt request flag will be set. If this bit is equal to "0", the UART interrupt request flag will not be influenced by the condition of the OERR or RXIF flags.

Bit 1 **TIIE**: Transmitter Idle interrupt enable control
0: Transmitter idle interrupt is disabled
1: Transmitter idle interrupt is enabled

This bit enables or disables the transmitter idle interrupt. If this bit is equal to "1" and when the transmitter idle flag TIDLE is set, due to a transmitter idle condition, the UART interrupt request flag will be set. If this bit is equal to "0", the UART interrupt request flag will not be influenced by the condition of the TIDLE flag.

Bit 0 **TEIE**: Transmitter Empty interrupt enable control
0: Transmitter empty interrupt is disabled
1: Transmitter empty interrupt is enabled

This bit enables or disables the transmitter empty interrupt. If this bit is equal to "1" and when the transmitter empty flag TXIF is set, due to a transmitter empty condition, the UART interrupt request flag will be set. If this bit is equal to "0", the UART interrupt request flag will not be influenced by the condition of the TXIF flag.

• UCR3 Register

The UCR3 register is used to enable the UART Single Wire Mode communication. As the name suggests in the single wire mode the UART communication can be implemented in one single line, RX/TX, together with the control of the RXEN and TXEN bits in the UCR2 register.

Bit	7	6	5	4	3	2	1	0
Name	—	—	—	—	—	—	—	SWM
R/W	—	—	—	—	—	—	—	R/W
POR	—	—	—	—	—	—	—	0

Bit 7~1 Unimplemented, read as "0"

Bit 0 **SWM**: Single Wire Mode enable control
0: Disable, the RX/TX pin is used as UART receiver function only
1: Enable, the RX/TX pin can be used as UART receiver or transmitter function controlled by the RXEN and TXEN bits
Note that when the Single Wire Mode is enabled, if both the RXEN and TXEN bits are high, the RX/TX pin will just be used as UART receiver input.

• TXR_RXR Register

The TXR_RXR register is the data register which is used to store the data to be transmitted on the TX pin or being received from the RX/TX pin.

Bit	7	6	5	4	3	2	1	0
Name	TXRX7	TXRX6	TXRX5	TXRX4	TXRX3	TXRX2	TXRX1	TXRX0
R/W	R/W	R/W	R/W	R/W	R/W	R/W	R/W	R/W
POR	x	x	x	x	x	x	x	x

"x": unknown

Bit 7~0 **TXRX7~TXRX0**: UART Transmit/Receive Data bit 7 ~ bit 0

• BRDH Register

Bit	7	6	5	4	3	2	1	0
Name	D7	D6	D5	D4	D3	D2	D1	D0
R/W	R/W	R/W	R/W	R/W	R/W	R/W	R/W	R/W
POR	0	0	0	0	0	0	0	0

Bit 7~0 **D7~D0**: Baud rate divider high byte
The baud rate divider BRD (BRDH/BRDL) defines the UART clock divider ratio.
Baud Rate = f_H/(BRD+UMOD/8)
BRD = 16~65535 or 8~65535 depending on BRDS
Note: 1. The BRD value should not be set to less than 16 when BRDS=0 or less than 8 when BRDS=1, otherwise errors may occur.
2. The BRDL must be written first and then BRDH, otherwise errors may occur.
3. The BRDH register should not be modified during data transmission process.

• BRDL Register

Bit	7	6	5	4	3	2	1	0
Name	D7	D6	D5	D4	D3	D2	D1	D0
R/W	R/W	R/W	R/W	R/W	R/W	R/W	R/W	R/W
POR	0	0	0	0	0	0	0	0

Bit 7~0 **D7~D0**: Baud rate divider low byte
The baud rate divider BRD (BRDH/BRDL) defines the UART clock divider ratio.
Baud Rate = f_H/(BRD+UMOD/8)
BRD = 16~65535 or 8~65535 depending on BRDS
Note: 1. The BRD value should not be set to less than 16 when BRDS=0 or less than 8 when BRDS=1, otherwise errors may occur.
2. The BRDL must be written first and then BRDH, otherwise errors may occur.
3. The BRDL register should not be modified during data transmission process.

• **UFCR Register**

The UFCR register is the FIFO control register which is used for UART modulation control, BRD range selection and trigger level selection for RXIF and interrupt.

Bit	7	6	5	4	3	2	1	0
Name	—	—	UMOD2	UMOD1	UMOD0	BRDS	RxFTR1	RxFTR0
R/W	—	—	R/W	R/W	R/W	R/W	R/W	R/W
POR	—	—	0	0	0	0	0	0

Bit 7~6 Unimplemented, read as "0"

Bit 5~3 **UMOD2~UMOD0**: UART Modulation Control bits

The modulation control bits are used to correct the baud rate of the received or transmitted UART signal. These bits determine if the extra UART clock cycle should be added in a UART bit time. The UMOD2~UMOD0 will be added to internal accumulator for every UART bit time. Until a carry to bit 3, the corresponding UART bit time increases a UART clock cycle.

Bit 2 **BRDS**: BRD range selection

0: BRD range is from 16 to 65535
1: BRD range is from 8 to 65535

The BRDS is used to control the sampling point in a UART bit time. If the BRDS bit is cleared to zero, the sampling point will be BRD/2, BRD/2+1×f_H, and BRD/2+2×f_H in a UART bit time. If the BRDS bit is set high, the sampling point will be BRD/2-1×f_H, BRD/2, and BRD/2+2×f_H in a UART bit time.

Note that the BRDS bit should not be modified during data transmission process.

Bit 1~0 **RxFTR1~RxFTR0**: Receiver FIFO trigger level (bytes)

00: 4 bytes in Receiver FIFO
01: 1 or more bytes in Receiver FIFO
10: 2 or more bytes in Receiver FIFO
11: 3 or more bytes in Receiver FIFO

For the receiver these bits define the number of received data bytes in the Receiver FIFO that will trigger the RXIF bit being set high, an interrupt will also be generated if the RIE bit is enabled. To prevent OERR from being set high, the receiver FIFO trigger level can be set to 2 bytes, avoiding an overrun state that cannot be processed by the program in time when more than 4 data bytes are received. After the reset the Receiver FIFO is empty.

• **RxCNT Register**

The RxCNT register is the counter used to indicate the number of received data bytes in the Receiver FIFO which have not been read by the MCU. This register is read only.

Bit	7	6	5	4	3	2	1	0
Name	—	—	—	—	—	D2	D1	D0
R/W	—	—	—	—	—	R	R	R
POR	—	—	—	—	—	0	0	0

Bit 7~3 Unimplemented, read as "0"

Bit 2~0 **D2~D0**: Receiver FIFO counter

The RxCNT register is the counter used to indicate the number of received data bytes in the Receiver FIFO which is not read by the MCU. When Receiver FIFO receives one byte data, the RxCNT will increase by one; when the MCU reads one byte data from the Receiver FIFO, the RxCNT will decrease by one. If there are 4 bytes of data in the Receiver FIFO, the 5th data will be saved in the shift register. If there is 6th data, the 6th data will be saved in the shift register. But the RxCNT remains the value of 4. The RxCNT will be cleared when reset occurs or UARTEN=1. This register is read only.

Baud Rate Generator

To setup the speed of the serial data communication, the UART function contains its own dedicated baud rate generator. The baud rate is controlled by its own internal free running 16-bit timer, the period of which is determined by two factors. The first of these is the value placed in the BRDH/BRDL register and the second is the UART modulation control bits UMOD2~UMOD0. To prevent accumulated error of the receiver baud rate frequency, it is recommended to use two stop bits for resynchronization after each byte is received. If a baud rate BR is required with UART clock f_H.

f_H/BR = Integer Part + Fractional Part

The integer part is loaded into BRD (BRDH/BRDL). The fractional part is multiplied by 8 and rounded, then loaded into the UMOD bit field below:

BRD = TRUNC(f_H/BR)

UMOD = ROUND[MOD(f_H/BR)×8]

Therefore, the actual baud rate is calculated as follows:

Baud rate = f_H/[BRD+(UMOD/8)]

Calculating the Baud Rate and Error Values

For a clock frequency of 4MHz, determine the BRDH/BRDL register value, the actual baud rate and the error value for a desired baud rate of 230400.

From the above formula, the BRD = TRUNC(f_H/BR) = TRUNC(17.36111) = 17

The UMOD = ROUND[MOD(f_H/BR)×8] = ROUND(0.36111×8) = ROUND(2.88888) = 3

The actual Baud Rate = f_H/[BRD+(UMOD/8)] = 230215.83

Therefore the error is equal to (230215.83-230400)/230400 = -0.08%

Modulation Control Example

To get the best-fitting bit sequence for UART modulation control bits UMOD2~UMOD0, the following algorithm can be used: Firstly, the fractional part of the theoretical division factor is multiplied by 8. Then the product will be rounded and UMOD2~UMOD0 bits will be filled with the rounded value. The UMOD2~UMOD0 will be added to internal accumulator for every UART bit time. Until a carry to bit 3, the corresponding UART bit time increases a UART clock cycle. The following is an example using the fraction 0.36111 previously calculated: UMOD[2:0]=ROUND(0.36111×8)=011b.

Fraction Addition	Carry to Bit 3	UART Bit Time Sequence	Extra UART Clock Cycle
0000b+0011b=0011b	No	Start bit	No
0011b+0011b=0110b	No	D0	No
0110b+0011b=1001b	Yes	D1	Yes
1001b+0011b=1100b	No	D2	No
1100b+0011b=1111b	No	D3	No
1111b+0011b=0010b	Yes	D4	Yes
0010b+0011b=0101b	No	D5	No
0101b+0011b=1000b	Yes	D6	Yes
1000b+0011b=1011b	No	D7	No
1011b+0011b=1110b	No	Parity bit	No
1110b+0011b=0001b	Yes	Stop bit	Yes

Baud Rate Correction Example

The following figure presents an example using a baud rate of 230400 generated with UART clock f_H. The data format for the following figure is: eight data bits, parity enabled, no address bit, two stop bits.

The following figure shows three different frames:

- The upper frame is the correct one, with a bit-length of 17.36 f_H cycles (4000000/230400=17.36).
- The middle frame uses a rough estimate, with 17 f_H cycles for the bit length.
- The lower frame shows a corrected frame using the best fit for the UART modulation control bits UMOD2~UMOD0.

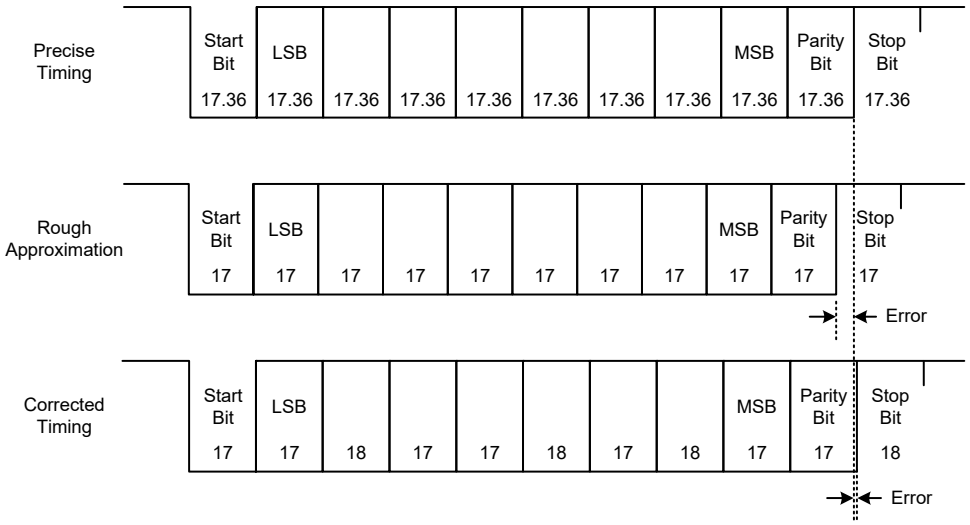

UART Setup and Control

For data transfer, the UART function utilizes a non-return-to-zero, more commonly known as NRZ, format. This is composed of one start bit, eight or nine data bits, and one or two stop bits. Parity is supported by the UART hardware, and can be setup to be even, odd, mark, space or no parity. For the most common data format, 8 data bits along with no parity and one stop bit, denoted as 8, N, 1, is used as the default setting, which is the setting at power-on. The number of data bits along with the parity are setup by programming the BNO, PRT1~PRT0 and PREN bits. The transmitter always uses two stop bits while the receiver uses one or two stop bits which is determined by the STOPS bit. The baud rate used to transmit and receive data is setup using the internal 16-bit baud rate generator, while the data is transmitted and received LSB first. Although the UART transmitter and receiver are functionally independent, they both use the same data format and baud rate. In all cases stop bits will be used for data transmission.

Enabling/Disabling the UART Interface

The basic on/off function of the internal UART function is controlled using the UARTEN bit in the UCR1 register. If the UARTEN, TXEN and RXEN bits are set, then these two UART pins will act as normal TX output pin and RX/TX input pin respectively. If no data is being transmitted on the TX pin, then it will default to a logic high value.

Clearing the UARTEN bit will disable the TX and RX/TX pins and allow these two pins to be used as normal I/O or other pin-shared functional pins by configuring the corresponding pin-shared control bits. When the UART function is disabled the buffer will be reset to an empty condition, at the same time discarding any remaining residual data. Disabling the UART will also reset the error and status flags with bits TXEN, RXEN, TXBRK, RXIF, OERR, FERR, PERR and NF as well as register RxCNT being cleared while bits TIDLE, TXIF and RIDLE will be set. The remaining control bits in

the UCR1, UCR2, UCR3, UFCR, BRDH and BRDL registers will remain unaffected. If the UARTEN bit in the UCR1 register is cleared while the UART is active, then all pending transmissions and receptions will be immediately suspended and the UART will be reset to a condition as defined above. If the UART is then subsequently re-enabled, it will restart again in the same configuration.

Data, Parity and Stop Bit Selection

The format of the data to be transferred is composed of various factors such as data bit length, parity on/off, parity type, address bits and the number of stop bits. These factors are determined by the setup of various bits within the UCR1 and UCR2 registers. The BNO bit controls the number of data bits which can be set to either 8 or 9, the PRT1~PRT0 bits control the choice of odd, even, mark or space parity, the PREN bit controls the parity on/off function and the STOPS bit decides whether one or two stop bits are to be used for the receiver, while the transmitter always uses two stop bits. The following table shows various formats for data transmission. The address bit, which is the MSB of the data byte, identifies the frame as an address character or data if the address detect function is enabled. The number of stop bits, which can be either one or two, is independent of the data length and is only configurable for the receiver. The transmitter uses two stop bits.

Start Bit	Data Bits	Address Bit	Parity Bit	Stop Bit
Example of 8-bit Data Formats				
1	8	0	0	1 or 2
1	7	0	1	1 or 2
1	7	1	0	1 or 2
Example of 9-bit Data Formats				
1	9	0	0	1 or 2
1	8	0	1	1 or 2
1	8	1	0	1 or 2

Transmitter Receiver Data Format

The following diagram shows the transmit and receive waveforms for both 8-bit and 9-bit data formats.

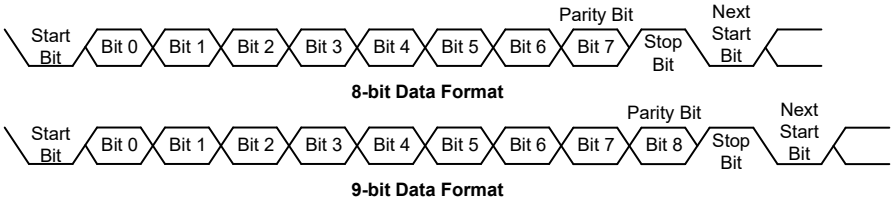

UART Transmitter

Data word lengths of either 8 or 9 bits can be selected by programming the BNO bit in the UCR1 register. When BNO bit is set, the word length will be set to 9 bits. In this case the 9th bit, which is the MSB, needs to be stored in the TX8 bit in the UCR1 register. At the transmitter core lies the Transmitter Shift Register, more commonly known as the TSR, whose data is obtained from the transmit data register, which is known as the TXR_RXR register. The data to be transmitted is loaded into this TXR_RXR register by the application program. The TSR register is not written to with new data until the stop bit from the previous transmission has been sent out. As soon as this stop bit has been transmitted, the TSR can then be loaded with new data from the TXR_RXR register, if it is available. It should be noted that the TSR register, unlike many other registers, is not directly mapped into the Data Memory area and as such is not available to the application program for direct read/write operations. An actual transmission of data will normally be enabled when the TXEN bit is set, but the data will not be transmitted until the TXR_RXR register has been loaded with data and the baud rate generator has defined a shift clock source. However, the transmission

can also be initiated by first loading data into the TXR_RXR register, after which the TXEN bit can be set. When a transmission of data begins, the TSR is normally empty, in which case a transfer to the TXR_RXR register will result in an immediate transfer to the TSR. If during a transmission the TXEN bit is cleared, the transmission will immediately cease and the transmitter will be reset. The TX output pin can then be configured as the I/O or other pin-shared functions by configuring the corresponding pin-shared control bits.

Transmitting Data

When the UART is transmitting data, the data is shifted on the TX pin from the shift register, with the least significant bit first. In the transmit mode, the TXR_RXR register forms a buffer between the internal bus and the transmitter shift register. It should be noted that if 9-bit data format has been selected, then the MSB will be taken from the TX8 bit in the UCR1 register. The steps to initiate a data transfer can be summarized as follows:

- Make the correct selection of the BNO, PRT1~PRT0 and PREN bits to define the required word length and parity type. Two stop bits are used for the transmitter.
- Setup the BRDH and BRDL registers and the UMOD2~UMOD0 bits to select the desired baud rate.
- Set the TXEN bit to ensure that the TX pin is used as a UART transmitter pin.
- Access the USR register and write the data that is to be transmitted into the TXR_RXR register. Note that this step will clear the TXIF bit.

This sequence of events can now be repeated to send additional data.

It should be noted that when TXIF=0, data will be inhibited from being written to the TXR_RXR register. Clearing the TXIF flag is always achieved using the following software sequence:

1. A USR register access
2. A TXR_RXR register write execution

The read-only TXIF flag is set by the UART hardware and if set indicates that the TXR_RXR register is empty and that other data can now be written into the TXR_RXR register without overwriting the previous data. If the TEIE bit is set then the TXIF flag will generate an interrupt.

During a data transmission, a write instruction to the TXR_RXR register will place the data into the TXR_RXR register, which will be copied to the shift register at the end of the present transmission. When there is no data transmission in progress, a write instruction to the TXR_RXR register will place the data directly into the shift register, resulting in the commencement of data transmission, and the TXIF bit being immediately set. When a frame transmission is complete, which happens after stop bits are sent or after the break frame, the TIDLE bit will be set. To clear the TIDLE bit the following software sequence is used:

1. A USR register access
2. A TXR_RXR register write execution

Note that both the TXIF and TIDLE bits are cleared by the same software sequence.

Transmitting Break

If the TXBRK bit is set and the state keeps for a time greater than $(BRD+1)\times t_H$ while TIDLE=1, then break characters will be sent on the next transmission. Break character transmission consists of a start bit, followed by 13×N ‘0’ bits and stop bits, where N=1, 2, etc. If a break character is to be transmitted then the TXBRK bit must be first set by the application program, and then cleared to generate the stop bits. Transmitting a break character will not generate a transmit interrupt. Note that a break condition length is at least 13 bits long. If the TXBRK bit is continually kept at a logic high level then the transmitter circuitry will transmit continuous break characters. After the application

program has cleared the TXBRK bit, the transmitter will finish transmitting the last break character and subsequently send out two stop bits. The automatic logic highs at the end of the last break character will ensure that the start bit of the next frame is recognized.

UART Receiver

The UART is capable of receiving word lengths of either 8 or 9 bits. If the BNO bit is set, the word length will be set to 9 bits with the MSB being stored in the RX8 bit of the UCR1 register. At the receiver core lies the Receive Serial Shift Register, commonly known as the RSR. The data which is received on the RX/TX external input pin is sent to the data recovery block. The data recovery block operating speed is 16 times that of the baud rate, while the main receive serial shifter operates at the baud rate. After the RX/TX pin is sampled for the stop bit, the received data in RSR is transferred to the receive data register, if the register is empty. The data which is received on the external RX/TX input pin is sampled three times by a majority detect circuit to determine the logic level that has been placed onto the RX/TX pin. It should be noted that the RSR register, unlike many other registers, is not directly mapped into the Data Memory area and as such is not available to the application program for direct read/write operations.

Receiving Data

When the UART receiver is receiving data, the data is serially shifted in on the external RX/TX input pin, LSB first. In the read mode, the TXR_RXR register forms a buffer between the internal bus and the receiver shift register. The TXR_RXR register is a four byte deep FIFO data buffer, where four bytes can be held in the FIFO while a fifth byte can continue to be received. Note that the application program must ensure that the data is read from TXR_RXR before the fifth byte has been completely shifted in, otherwise this fifth byte will be discarded and an overrun error OERR will be subsequently indicated. For continuous multi-byte data transmission, it is strongly recommended that the receiver uses two stop bits to avoid a receiving error caused by the accumulated error of the receiver baud rate frequency.

The steps to initiate a data transfer can be summarized as follows:

- Make the correct selection of BNO, PRT1~PRT0, PREN and STOPS bits to define the word length and parity type and number of stop bits.
- Setup the BRDH and BRDL registers and the UMOD2~UMOD0 bits to select the desired baud rate.
- Set the RXEN bit to ensure that the RX/TX pin is used as a UART receiver pin.

At this point the receiver will be enabled which will begin to look for a start bit.

When a character is received the following sequence of events will occur:

- The RXIF bit in the USR register will be set when the TXR_RXR register has data available, the number of the available data bytes can be checked by polling the RxCNT register content.
- When the contents of the shift register have been transferred to the TXR_RXR register and Receiver FIFO trigger level is reached if the RIE bit is set, then an interrupt will be generated.
- If during reception, a frame error, noise error, parity error, or an overrun error has been detected, then the error flags can be set.

The RXIF bit can be cleared using the following software sequence:

1. A USR register access
2. A TXR_RXR register read execution

Receiving Break

Any break character received by the UART will be managed as a framing error. The receiver will count and expect a certain number of bit times as specified by the values programmed into the BNO plus one or two stop bits. If the break is much longer than 13 bit times, the reception will

be considered as complete after the number of bit times specified by BNO plus one or two stop bits. The RXIF bit is set, FERR is set, zeros are loaded into the receive data register, interrupts are generated if appropriate and the RIDLE bit is set. A break is regarded as a character that contains only zeros with the FERR flag set. If a long break signal has been detected, the receiver will regard it as a data frame including a start bit, data bits and the invalid stop bit and the FERR flag will be set. The receiver must wait for a valid stop bit before looking for the next start bit. The receiver will not make the assumption that the break condition on the line is the next start bit. The break character will be loaded into the buffer and no further data will be received until one or two stop bits are received. It should be noted that the RIDLE read only flag will go high when the stop bits have not yet been received. The reception of a break character on the UART registers will result in the following:

- The framing error flag, FERR, will be set.
- The receive data register, TXR_RXR, will be cleared.
- The OERR, NF, PERR, RIDLE or RXIF flags will possibly be set.

Idle Status

When the receiver is reading data, which means it will be in between the detection of a start bit and the reading of a stop bit, the receiver status flag in the USR register, otherwise known as the RIDLE flag, will have a zero value. In between the reception of a stop bit and the detection of the next start bit, the RIDLE flag will have a high value, which indicates the receiver is in an idle condition.

Receiver Interrupt

The read only receive interrupt flag RXIF in the USR register is set by an edge generated by the receiver. An interrupt is generated if RIE=1, when a word is transferred from the Receive Shift Register, RSR, to the Receive Data Register, TXR_RXR. An overrun error can also generate an interrupt if RIE=1.

When a subroutine will be called with an execution time longer than the time for UART to receive five data bytes, if the UART received data could not be read in time during the subroutine execution, clear the RXEN bit to zero in advance to suspend data reception. If the UART interrupt could not be served in time to process the overrun error during the subroutine execution, ensure that both EMI and RXEN bits are disabled during this period, and then enable EMI and RXEN again after the subroutine execution has been completed to continue the UART data reception.

Managing Receiver Errors

Several types of reception errors can occur within the UART module, the following section describes the various types and how they are managed by the UART.

Overrun Error – OERR

The TXR_RXR register is composed of a four byte deep FIFO data buffer, where four bytes can be held in the FIFO register, while a fifth byte can continue to be received. Before this fifth byte has been entirely shifted in, the data should be read from the TXR_RXR register. If this is not done, the overrun error flag OERR will be consequently indicated.

In the event of an overrun error occurring, the following will happen:

- The OERR flag in the USR register will be set.
- The TXR_RXR contents will not be lost.
- The shift register will be overwritten.
- An interrupt will be generated if the RIE bit is set.

When the OERR flag is set to “1”, it is necessary to read five data bytes from the four-byte deep receiver FIFO and the shift register immediately to avoid unexpected errors, such as the UART is unable to receive data. If such an error occurs, clear the RXEN bit to “0” then set it to “1” again to continue data reception.

The OERR flag can be cleared by an access to the USR register followed by a read to the TXR_RXR register.

Noise Error – NF

Over-sampling is used for data recovery to identify valid incoming data and noise. If noise is detected within a frame the following will occur:

- The read only noise flag, NF, in the USR register will be set on the rising edge of the RXIF bit.
- Data will be transferred from the Shift register to the TXR_RXR register.
- No interrupt will be generated. However this bit rises at the same time as the RXIF bit which itself generates an interrupt.

Note that the NF flag is reset by a USR register read operation followed by a TXR_RXR register read operation.

Framing Error – FERR

The read only framing error flag, FERR, in the USR register, is set if a zero is detected instead of stop bits. If two stop bits are selected, both stop bits must be high; otherwise the FERR flag will be set. The FERR flag and the received data will be recorded in the USR and TXR_RXR registers respectively, and the flag is cleared in any reset.

Parity Error – PERR

The read only parity error flag, PERR, in the USR register, is set if the parity of the received word is incorrect. This error flag is only applicable if the parity is enabled, PREN=1, and if the parity type, odd, even, mark or space, is selected. The read only PERR flag and the received data will be recorded in the USR and TXR_RXR registers respectively. It is cleared on any reset, it should be noted that the flags, FERR and PERR, in the USR register should first be read by the application program before reading the data word.

UART Interrupt Structure

Several individual UART conditions can generate a UART interrupt. When these conditions exist, a low pulse will be generated to get the attention of the microcontroller. These conditions are a transmitter data register empty, transmitter idle, receiver reaching FIFO trigger level, receiver overrun, address detect and an RX/TX pin wake-up. When any of these conditions are created, if the global interrupt enable bit and its corresponding interrupt control bit are enabled and the stack is not full, the program will jump to its corresponding interrupt vector where it can be serviced before returning to the main program. Four of these conditions have the corresponding USR register flags which will generate a UART interrupt if its associated interrupt enable control bit in the UCR2 register is set. The two transmitter interrupt conditions have their own corresponding enable control bits, while the two receiver interrupt conditions have a shared enable control bit. These enable bits can be used to mask out individual UART interrupt sources.

The address detect condition, which is also a UART interrupt source, does not have an associated flag, but will generate a UART interrupt when an address detect condition occurs if its function is enabled by setting the ADDEN bit in the UCR2 register. An RX/TX pin wake-up, which is also a UART interrupt source, does not have an associated flag, but will generate a UART interrupt if the UART clock (f_H) source is switched off and the WAKE and RIE bits in the UCR2 register are set when a falling edge on the RX/TX pin occurs.

Note that the USR register flags are read only and cannot be cleared or set by the application program, neither will they be cleared when the program jumps to the corresponding interrupt servicing routine, as is the case for some of the other interrupts. The flags will be cleared automatically when certain actions are taken by the UART, the details of which are given in the UART register section. The overall UART interrupt can be disabled or enabled by the related interrupt enable control bits in the interrupt control registers of the microcontroller to decide whether the interrupt requested by the UART module is masked out or allowed.

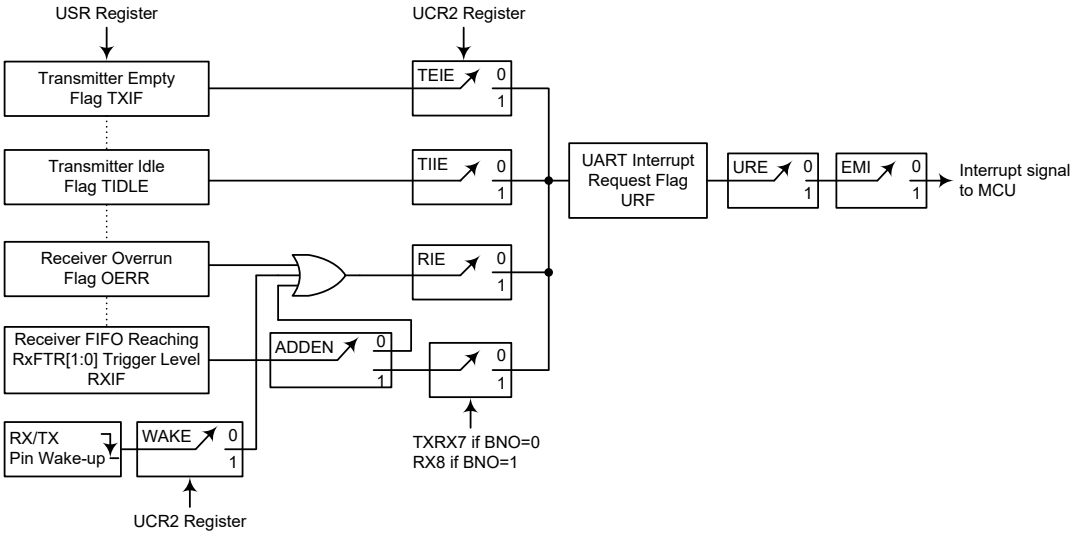

UART Interrupt Structure

Address Detect Mode

Setting the Address Detect Mode bit, ADDEN, in the UCR2 register, enables this special mode. If this bit is enabled then an additional qualifier will be placed on the generation of a Receiver Data Available interrupt, which is requested by the RXIF flag. If the ADDEN bit is enabled, then when data is available, an interrupt will only be generated, if the highest received bit has a high value. Note that the URE and EMI interrupt enable bits must also be enabled for correct interrupt generation. This highest address bit is the 9th bit if BNO=1 or the 8th bit if BNO=0. If this bit is high, then the received word will be defined as an address rather than data. A Data Available interrupt will be generated every time the last bit of the received word is set. If the ADDEN bit is not enabled, then a Receiver Data Available interrupt will be generated each time the RXIF flag is set, irrespective of the data last bit status. The address detect mode and parity enable are mutually exclusive functions. Therefore if the address detect mode is enabled, then to ensure correct operation, the parity function should be disabled by resetting the parity enable bit PREN to zero.

ADDEN	9th Bit if BNO=1 8th Bit if BNO=0	UART Interrupt Generated
0	0	√
	1	√
1	0	×
	1	√

ADDEN Bit Function

UART Power Down and Wake-up

When the UART clock (f_H) is off, the UART will cease to function, all clock sources to the module are shutdown. If the UART clock (f_H) is off while a transmission is still in progress, then the transmission will be paused until the UART clock source derived from the microcontroller is activated. In a similar way, if the MCU enters the IDLE or SLEEP mode while receiving data, then the reception of data will likewise be paused. When the MCU enters the IDLE or SLEEP mode, note that the USR, UCR1, UCR2, UCR3, UFCR, RxCNT, TXR_RXR as well as the BRDH and BRDL registers will not be affected. It is recommended to make sure first that the UART data transmission or reception has been finished before the microcontroller enters the IDLE or SLEEP mode.

The UART function contains a receiver RX/TX pin wake-up function, which is enabled or disabled by the WAKE bit in the UCR2 register. If this bit, along with the UART enable bit, UARTEN, the receiver enable bit, RXEN and the receiver interrupt bit, RIE, are all set when the UART clock (f_H) is off, then a falling edge on the RX/TX pin will trigger an RX/TX pin wake-up UART interrupt. Note that as it takes certain system clock cycles after a wake-up, before normal microcontroller operation resumes, any data received during this time on the RX/TX pin will be ignored.

For a UART wake-up interrupt to occur, in addition to the bits for the wake-up being set, the global interrupt enable bit, EMI, and the UART interrupt enable bit, URE, must be set. If the EMI and URE bits are not set then only a wake up event will occur and no interrupt will be generated. Note also that as it takes certain system clock cycles after a wake-up before normal microcontroller resumes, the UART interrupt will not be generated until after this time has elapsed.

Serial Peripheral Interface – SPI

The devices contain an independent SPI function. It is important not to confuse this independent SPI function with the additional one contained within the combined SIM function, which is described in another section of this datasheet.

The SPI interface is often used to communicate with external peripheral devices such as sensors, Flash or EEPROM memory devices etc. Originally developed by Motorola, the four line SPI interface is a synchronous serial data interface that has a relatively simple communication protocol simplifying the programming requirements when communicating with external hardware devices.

The communication is full duplex and operates as a slave/master type, where the device can be either master or slave. Although the SPI interface specification can control multiple slave devices from a single master, however the device provides only one $\overline{\text{SPISCS}}$ pin. If the master needs to control multiple slave devices from a single master, the master can use I/O pins to select the slave devices.

SPI Interface Operation

The SPI interface is a full duplex synchronous serial data link. It is a four line interface with pin names SPISDI, SPISDO, SPISCK and $\overline{\text{SPISCS}}$. Pins SPISDI and SPISDO are the Serial Data Input and Serial Data Output lines, the SPISCK pin is the Serial Clock line and $\overline{\text{SPISCS}}$ is the Slave Select line. As the SPI interface pins are pin-shared with normal I/O pins, the SPI interface must first be enabled by configuring the corresponding selection bits in the pin-shared function selection registers. The SPI can be disabled or enabled using the SPIEN bit in the SPIC0 register. Communication between devices connected to the SPI interface is carried out in a slave/master mode with all data transfer initiations being implemented by the master. The Master also controls the clock signal. As the device only contains a single $\overline{\text{SPISCS}}$ pin only one slave device can be utilized. The pull-high resistors of the SPI pin-shared I/O are selected using pull-high control registers when the SPI function is enabled and the corresponding pins are used as SPI input pins.

The $\overline{\text{SPISCS}}$ pin is controlled by software, set SPICSEN bit to 1 to enable the $\overline{\text{SPISCS}}$ pin function, and clear SPICSEN bit to 0, the $\overline{\text{SPISCS}}$ pin will be floating state.

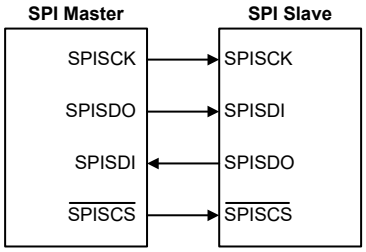

SPI Master/Slave Connection

The SPI function in the device offers the following features:

- Full duplex synchronous data transfer
- Both Master and Slave modes
- LSB first or MSB first data transmission modes
- Transmission complete flag
- Rising or falling active clock edge

The status of the SPI interface pins is determined by a number of factors such as whether the device is in the master or slave mode and upon the condition of certain control bits such as SPICSEN and SPIEN.

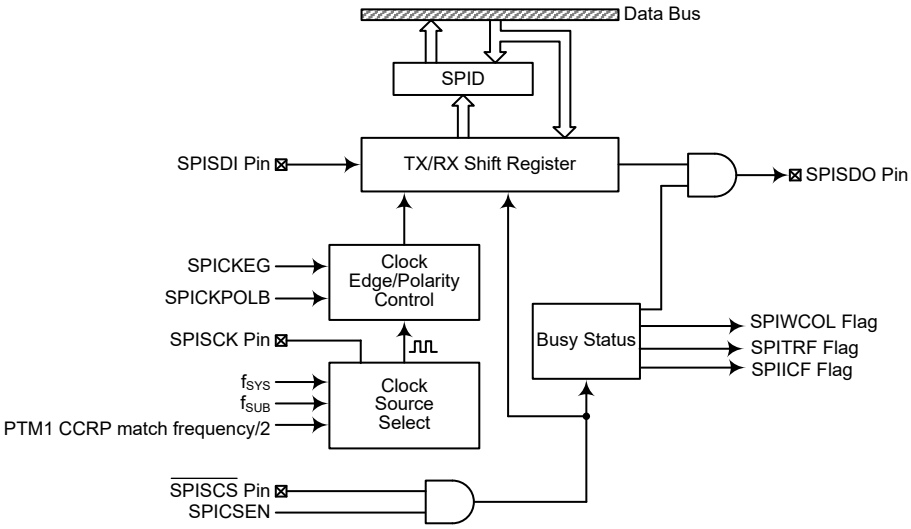

SPI Block Diagram

SPI Registers

There are three internal registers which control the overall operation of the SPI interface. These are the SPID data register and two registers, SPIC0 and SPIC1.

Register Name	Bit							
	7	6	5	4	3	2	1	0
SPIC0	SPIM2	SPIM1	SPIM0	—	—	—	SPIEN	SPIICF
SPIC1	—	—	SPICKPOLB	SPICKEG	SPIMLS	SPICSEN	SPIWCOL	SPITRF
SPID	D7	D6	D5	D4	D3	D2	D1	D0

SPI Register List

SPI Data Register

The SPID register is used to store the data being transmitted and received. Before the device writes data to the SPI bus, the actual data to be transmitted must be placed in the SPID register. After the data is received from the SPI bus, the device can read it from the SPID register. Any transmission or reception of data from the SPI bus must be made via the SPID register.

- **SPID Register**

Bit	7	6	5	4	3	2	1	0
Name	D7	D6	D5	D4	D3	D2	D1	D0
R/W	R/W	R/W	R/W	R/W	R/W	R/W	R/W	R/W
POR	x	x	x	x	x	x	x	x

"x": unknown

Bit 7~0 **D7~D0**: SPI data register bit 7 ~ bit 0

SPI Control Registers

There are also two control registers for the SPI interface, SPIC0 and SPIC1. The SPIC0 register is used to control the enable/disable function and to set the data transmission clock frequency. The SPIC1 register is used for other control functions such as LSB/MSB selection, write collision flag etc.

- **SPIC0 Register**

Bit	7	6	5	4	3	2	1	0
Name	SPIM2	SPIM1	SPIM0	—	—	—	SPIEN	SPIICF
R/W	R/W	R/W	R/W	—	—	—	R/W	R/W
POR	1	1	1	—	—	—	0	0

Bit 7~5 **SPIM2~SPIM0:** SPI operating mode control
000: SPI master mode; SPI clock is $f_{SYS}/4$
001: SPI master mode; SPI clock is $f_{SYS}/16$
010: SPI master mode; SPI clock is $f_n/64$
011: SPI master mode; SPI clock is f_{SUB}
100: SPI master mode; SPI clock is PTM1 CCRP match frequency/2
101: SPI slave mode
110: SPI disable
111: SPI disable

These bits are used to control the SPI Master/Slave selection and the SPI Master clock frequency. The SPI clock is a function of the system clock but can also be chosen to be sourced from PTM1 and f_{SUB}. If the SPI Slave Mode is selected then the clock will be supplied by an external Master device.

Bit 4~2 Unimplemented, read as "0"

Bit 1 **SPIEN**: SPI enable control
0: Disable
1: Enable

The bit is the overall on/off control for the SPI interface. When the SPIEN bit is cleared to zero to disable the SPI interface, the SPISDI, SPISDO, SPISCK and $\overline{\text{SPISCS}}$ lines will lose their SPI function and the SPI operating current will be reduced to a minimum value. When the bit is high the SPI interface is enabled.

Bit 0 **SPIICF**: SPI incomplete flag
0: SPI incomplete condition is not occurred
1: SPI incomplete condition is occurred

This bit is only available when the SPI is configured to operate in an SPI slave mode. If the SPI operates in the slave mode with the SPIEN and SPICSEN bits both being set high but the $\overline{\text{SPISCS}}$ line is pulled high by the external master device before the SPI data transfer is completely finished, the SPIICF bit will be set high together with

the SPITRF bit. When this condition occurs, the corresponding interrupt will occur if the interrupt function is enabled. However, the SPITRF bit will not be set high if the SPIICF bit is set high by software application program.

- **SPIC1 Register**

Bit	7	6	5	4	3	2	1	0
Name	—	—	SPICKPOLB	SPICKEG	SPIMLS	SPICSEN	SPIWCOL	SPITRF
R/W	—	—	R/W	R/W	R/W	R/W	R/W	R/W
POR	—	—	0	0	0	0	0	0

Bit 7~6 Unimplemented, read as "0"

Bit 5 **SPICKPOLB**: SPI clock line base condition selection
0: The SPISCK line will be high when the clock is inactive
1: The SPISCK line will be low when the clock is inactive
The SPICKPOLB bit determines the base condition of the clock line, if the bit is high, then the SPISCK line will be low when the clock is inactive. When the SPICKPOLB bit is low, then the SPISCK line will be high when the clock is inactive.

Bit 4 **SPICKEG**: SPI SPISCK clock active edge type selection
SPICKPOLB=0
0: SPISCK has high base level with data capture on SPISCK rising edge
1: SPISCK has high base level with data capture on SPISCK falling edge
SPICKPOLB=1
0: SPISCK has low base level with data capture on SPISCK falling edge
1: SPISCK has low base level with data capture on SPISCK rising edge
The SPICKEG and SPICKPOLB bits are used to setup the way that the clock signal outputs and inputs data on the SPI bus. These two bits must be configured before a data transfer is executed otherwise an erroneous clock edge may be generated. The SPICKPOLB bit determines the base condition of the clock line, if the bit is high, then the SPISCK line will be low when the clock is inactive. When the SPICKPOLB bit is low, then the SPISCK line will be high when the clock is inactive. The SPICKEG bit determines active clock edge type which depends upon the condition of the SPICKPOLB bit.

Bit 3 **SPIMLS**: SPI data shift order
0: LSB first
1: MSB first
This is the data shift select bit and is used to select how the data is transferred, either MSB or LSB first. Setting the bit high will select MSB first and low for LSB first.

Bit 2 **SPICSEN**: SPI $\overline{\text{SPISCS}}$ pin control
0: Disable
1: Enable
The SPICSEN bit is used as an enable/disable for the $\overline{\text{SPISCS}}$ pin. If this bit is low, then the $\overline{\text{SPISCS}}$ pin will be disabled and placed into a floating condition. If the bit is high the $\overline{\text{SPISCS}}$ pin will be enabled and used as a select pin.

Bit 1 **SPIWCOL**: SPI write collision flag
0: No collision
1: Collision
The SPIWCOL flag is used to detect if a data collision has occurred. If this bit is high it means that data has been attempted to be written to the SPID register during a data transfer operation. This writing operation will be ignored if data is being transferred. The bit can be cleared to zero by the application program.

Bit 0 **SPITRF**: SPI Transmit/Receive complete flag
0: SPI data is being transferred
1: SPI data transmission is completed
The SPITRF bit is the Transmit/Receive Complete flag and is set "1" automatically when an SPI data transmission is completed, but must cleared to zero by the application program. It can be used to generate an interrupt.

SPI Communication

After the SPI interface is enabled by setting the SPIEN bit high, then in the Master Mode, when data is written to the SPID register, transmission/reception will begin simultaneously. When the data transfer is complete, the SPITRF flag will be set automatically, but must be cleared using the application program. In the Slave Mode, when the clock signal from the master has been received, any data in the SPID register will be transmitted and any data on the SPISDI pin will be shifted into the SPID register.

The master should output a $\overline{\text{SPISCS}}$ signal to enable the slave device before a clock signal is provided. The slave data to be transferred should be well prepared at the appropriate moment relative to the SPISCK signal depending upon the configurations of the SPICKPOLB bit and SPICKEG bit. The accompanying timing diagram shows the relationship between the slave data and SPISCK signal for various configurations of the SPICKPOLB and SPICKEG bits.

The SPI Master mode will continue to function if the SPI clock is running.

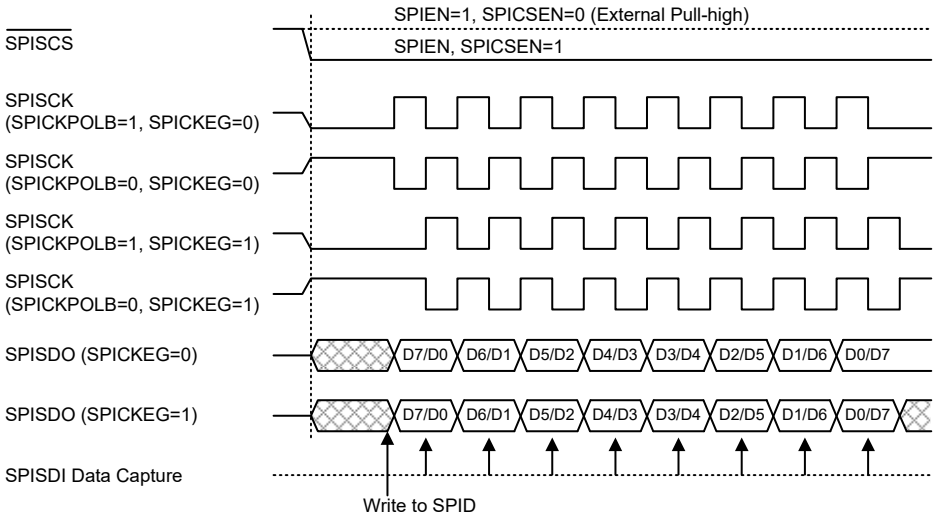

SPI Master Mode Timing

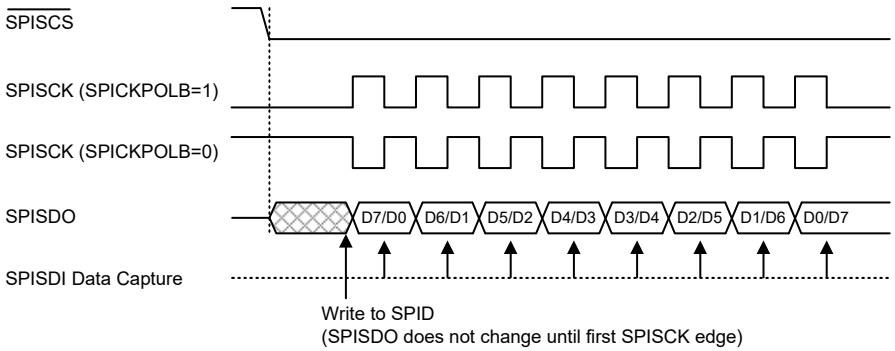

SPI Slave Mode Timing – SPICKEG=0

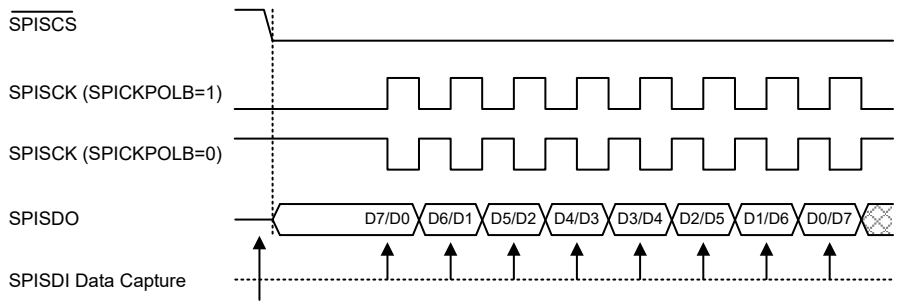

Write to SPID
(SPISDO changes as soon as writing occurs; SPISDO is floating if $\overline{\text{SPISCS}}$=1)

Note: For SPI slave mode, if SPIEN=1 and SPICSEN=0, SPI is always enabled and ignores the $\overline{\text{SPISCS}}$ level.

SPI Slave Mode Timing – SPICKEG=1

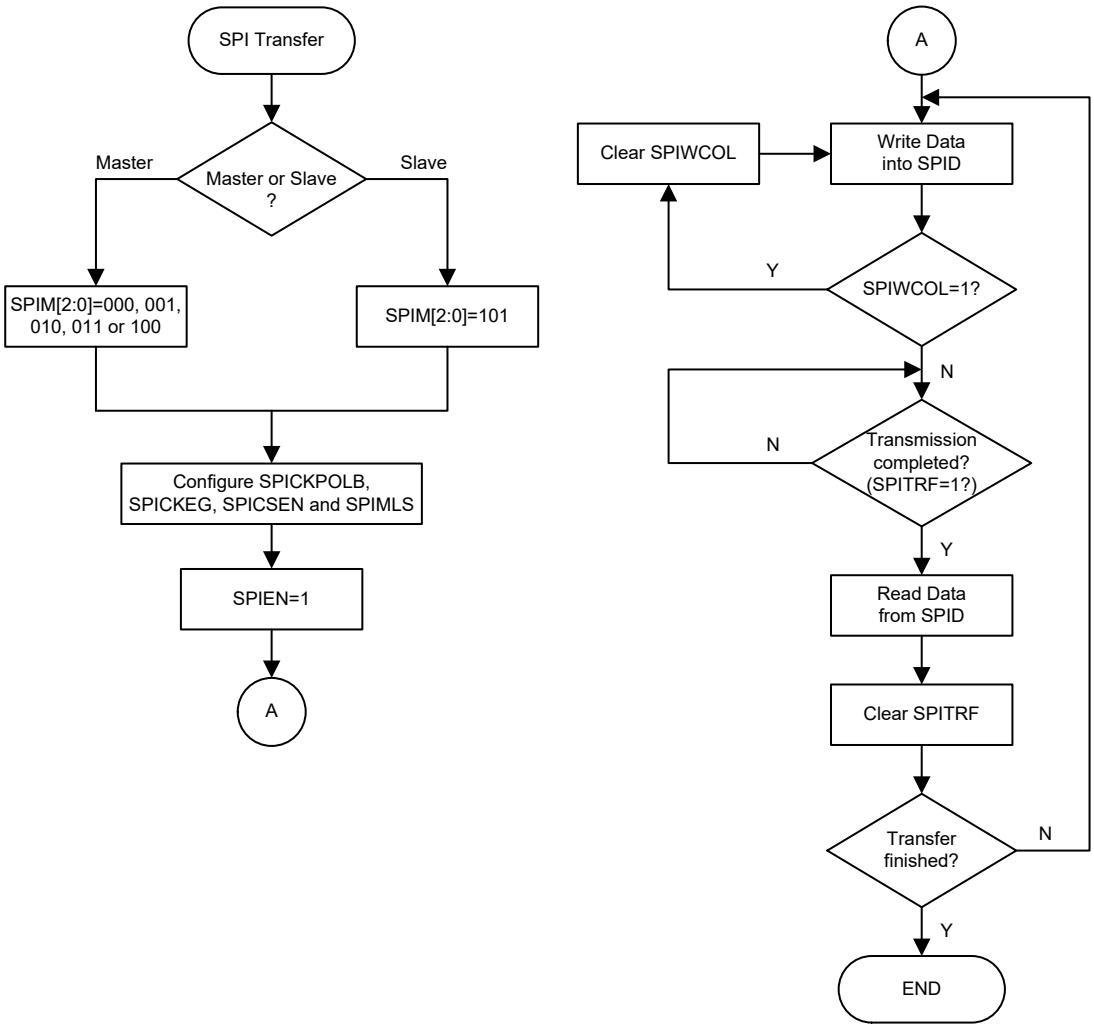

SPI Transfer Control Flowchart

SPI Bus Enable/Disable

To enable the SPI bus, set SPICSEN=1 and $\overline{\text{SPISCS}}$=0, then wait for data to be written into the SPID (TXRX buffer) register. For the Master Mode, after data has been written to the SPID (TXRX buffer) register, then transmission or reception will start automatically. When all the data has been transferred the SPITRF bit should be set. For the Slave Mode, when clock pulses are received on SPISCK, data in the TXRX buffer will be shifted out or data on SPISDI will be shifted in.

When the SPI bus is disabled, SPISCK, SPISDI, SPISDO, $\overline{\text{SPISCS}}$ will become I/O pins or the other pin-shared functions by configuring the corresponding pin-shared selection bits.

SPI Operation Steps

All communication is carried out using the 4-line interface for either Master or Slave Mode.

The SPICSEN bit in the SPIC1 register controls the overall function of the SPI interface. Setting this bit high will enable the SPI interface by allowing the $\overline{\text{SPISCS}}$ line to be active, which can then be used to control the SPI interface. If the SPICSEN bit is low, the SPI interface will be disabled and the $\overline{\text{SPISCS}}$ line will be in a floating condition and can therefore not be used for control of the SPI interface. If the SPICSEN bit and the SPIEN bit in the SPIC0 register are set high, this will place the SPISDI line in a floating condition and the SPISDO line high. If in Master Mode the SPISCK line will be either high or low depending upon the clock polarity selection bit SPICKPOLB in the SPIC1 register. If in Slave Mode the SPISCK line will be in a floating condition. If SPIEN is low then the bus will be disabled and $\overline{\text{SPISCS}}$, SPISDI, SPISDO and SPISCK will all become I/O pins or the other functions using the corresponding pin-shared function selection bits. In the Master Mode the Master will always generate the clock signal. The clock and data transmission will be initiated after data has been written into the SPID register. In the Slave Mode, the clock signal will be received from an external master device for both data transmission and reception. The following sequences show the order to be followed for data transfer in both Master and Slave Mode.

Master Mode

- Step 1
  Select the SPI Master mode and clock source using the SPIM2~SPIM0 bits in the SPIC0 control register.
- Step 2
  Setup the SPICSEN bit and setup the SPIMLS bit to choose if the data is MSB or LSB first, this must be same as the Slave device.
- Step 3
  Setup the SPIEN bit in the SPIC0 control register to enable the SPI interface.
- Step 4
  For write operations: write the data to the SPID register, which will actually place the data into the TXRX buffer. Then use the SPISCK and SPISDO lines to output the data. After this go to step 5.
  For read operations: the data transferred in on the SPISDI line will be stored in the TXRX buffer until all the data has been received at which point it will be latched into the SPID register.
- Step 5
  Check the SPIWCOL bit if set high then a collision error has occurred so return to step 4. If equal to zero then go to the following step.
- Step 6
  Check the SPITRF bit or wait for an SPI serial bus interrupt.

- Step 7
  Read data from the SPID register.
- Step 8
  Clear SPITRF.
- Step 9
  Go to step 4.

Slave Mode

- Step 1
  Select the SPI Slave mode using the SPIM2~SPIM0 bits in the SPIC0 control register.
- Step 2
  Setup the SPICSEN bit and setup the SPIMLS bit to choose if the data is MSB or LSB first, this setting must be the same with the Master device.
- Step 3
  Setup the SPIEN bit in the SPIC0 control register to enable the SPI interface.
- Step 4
  For write operations: write the data to the SPID register, which will actually place the data into the TXRX buffer. Then wait for the master clock SPISCK and $\overline{\text{SPISCS}}$ signal. After this, go to step 5.
  For read operations: the data transferred in on the SPISDI line will be stored in the TXRX buffer until all the data has been received at which point it will be latched into the SPID register.
- Step 5
  Check the SPIWCOL bit if set high then a collision error has occurred so return to step 4. If equal to zero then go to the following step.
- Step 6
  Check the SPITRF bit or wait for an SPI serial bus interrupt.
- Step 7
  Read data from the SPID register.

Step 8
Clear SPITRF.

Step 9
Go to step 4.

Error Detection

The SPIWCOL bit in the SPIC1 register is provided to indicate errors during data transfer. The bit is set by the SPI serial Interface but must be cleared by the application program. This bit indicates a data collision has occurred which happens if a write to the SPID register takes place during a data transfer operation and will prevent the write operation from continuing.

LCD Driver

For large volume applications, which incorporate an LCD in their design, the use of a custom display rather than a more expensive character based display reduces costs significantly. However, the corresponding COM and SEG signals required, which vary in both amplitude and time, to drive such a custom display require many special considerations for proper LCD operation to occur. These devices contain an LCD Driver function, which with their internal LCD signal generating circuitry and various options will automatically generate these time and amplitude varying signals to provide a means of direct driving and easy interfacing to a range of custom LCDs.

These devices include a wide range of options to enable LCD displays of various types to be driven. The table shows the range of options available across the device range.

Driver No.	Duty	Bias Level	Bias Type	Waveform Type
30×4	1/4	1/3	R or C	A or B
28×6	1/6	1/3	R or C	A or B
26×8	1/8	1/3	R	A or B
26×8	1/8	1/4	R	A or B

LCD Driver Output Selection – BH67F5265

Driver No.	Duty	Bias Level	Bias Type	Waveform Type
44×4	1/4	1/3	R or C	A or B
42×6	1/6	1/3	R or C	A or B
40×8	1/8	1/3	R	A or B
40×8	1/8	1/4	R	A or B

LCD Driver Output Selection – BH67F5275

LCD Display Memory

An area of Data Memory is especially reserved for use for the LCD display data. This data area is known as the LCD Memory. Any data written here will be automatically read by the internal display driver circuits, which will in turn automatically generate the necessary LCD driving signals. Therefore any data written into this Memory will be immediately reflected into the actual display connected to the microcontroller.

These devices provide an area of embedded data memory for the LCD display. This area is located at 00H to 1DH or 00H to 2BH in Sector 4 of the Data Memory respectively. The LCD display memory can be read and written to by indirect addressing mode using MP1L/MP1H and MP2L/MP2H, or by direct addressing mode using the corresponding extended instructions. If using the indirect addressing to access the Display Memory therefore requires first that Sector 4 is selected by writing a value of 04H to MP1H or MP2H. After this, the memory can then be accessed by using indirect addressing through the use of MP1L or MP2L. With Sector 4 selected, then using MP1L/MP2L to read or write to the memory area, from 00H to 1DH or 00H to 2BH, will result in operations to the LCD memory.

When data is written into the display data area, it is automatically read by the LCD driver which then generates the corresponding LCD driving signals. To turn the display on or off, a “1” or a “0” is written to the corresponding bit of the display memory, respectively. The figure illustrates the mapping between the display memory and LCD pattern for the devices.

The unimplemented LCD RAM bits cannot be used as general purpose RAM for application. For example, if the LCD duty is selected as 1/4 duty (4-COM), the COM b4~b7 will be read as 0 only.

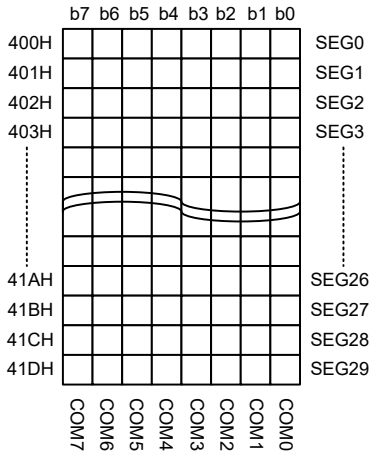

LCD Memory Map – BH67F5265

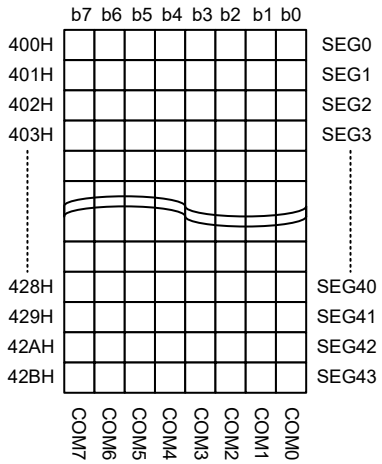

LCD Memory Map – BH67F5275

LCD Clock Source

The LCD clock source is the internal clock signal, f_{SUB}, divided by 8, using an internal divider circuit. The f_{SUB} internal clock is supplied by either the LIRC or LXT oscillator, the choice of which is determined by the FSS bit in the SCC register. For proper LCD operation, this arrangement is provided to generate an ideal LCD clock source frequency of 4kHz.

f_{SUB} Clock Source	LCD Clock Frequency
LIRC	4kHz
LXT	4kHz

LCD Clock Source

LCD Registers

Control Registers in the Data Memory, are used to control the various setup features of the LCD Driver. There are several control registers for the LCD function, LCDCP, LCDC0 and LCDC2.

The LCDPR bit in the LCDCP register is used to select the PLCD pin or the internal charge pump regulator to supply the power for the R type LCD COMs and SEGs pins. Bits CPVS1 and CPVS0 in the same register are used to select an appropriate charge pump output voltage level for the R type

LCD.

The TYPE bit in the LCDC0 register is used to select whether Type A or Type B LCD control signals are used. The RCT bit in the LCDC0 register is used to select whether R type or C type LCD drive bias. Bits LCDP1 and LCDP0 in the LCDC0 register are used to select the power source to supply the C type LCD panel with the correct bias voltages. Bits LCDIS1 and LCDIS0 in the LCDC0 register are used to select the internal bias current to supply the R type LCD panel with the correct bias voltages. A choice to best match the LCD panel used in the application can be selected also to minimise bias current. The LCDEN bit in the LCDC0 register, which provides the overall LCD enable/disable function, will only be effective when these devices are in the FAST, SLOW or IDLE Mode. If these devices are in the SLEEP Mode then the display will always be disabled.

The LCDC2 register is used for the C type LCD pump clock divider as well as LCD duty and bias selection.

Register Name	Bit							
	7	6	5	4	3	2	1	0
LCDC0	TYPE	RCT	LCDP1	LCDP0	—	LCDIS1	LCDIS0	LCDEN
LCDCP	—	—	—	—	LCDPR	—	CPVS1	CPVS0
LCDC2	LCDPCK2	LCDPCK1	LCDPCK0	—	—	DTYC1	DTYC0	BIAS

LCD Register List

- **LCDC0 Register**

Bit	7	6	5	4	3	2	1	0
Name	TYPE	RCT	LCDP1	LCDP0	—	LCDIS1	LCDIS0	LCDEN
R/W	R/W	R/W	R/W	R/W	—	R/W	R/W	R/W
POR	0	0	0	0	—	0	0	0

Bit 7 **TYPE**: LCD waveform type selection
0: Type A
1: Type B

Bit 6 **RCT**: LCD bias type selection
0: R type
1: C type

Note: 1. When the R type LCD is selected by clearing the RCT bit to 0, the LCDP1~LCDP0 bits in this register shold be fixed at 00.
2. When the C type LCD is selected by setting the RCT bit to 1, the LCDPR bit in the LCDCP register should be fixed at 0.
3. The C1, C2 and V2 pins are pin-shared with I/O or other functions, when the RCT is set to 1, if the I/O or other pin-shared functions are selected, they will interfere with the C1, C2 and V2 funcitons, therefore special attention should be made when setting.

Bit 5~4 **LCDP1~LCDP0**: C type LCD power source selection
00: From external PLCD/V1/V2 pin input
01: From internal V_C=DPN V_{REF}
10: From internal V_B=3V
11: From internal V_A=V_{DD}

The DPN V_{REF} is an internal reference voltage with an approximate level of 1.0V.

Bit 3 Unimplemented, read as “0”

Bit 2~1 **LCDIS1~LCDIS0**: R type LCD bias current selection (V_A=V_{PLCD}=V_{DD}, 1/3 bias)
00: 25μA
01: 50μA
10: 100μA
11: 200μA

Bit 0 **LCDEN**: LCD enable control
0: Disable
1: Enable
In the FAST, SLOW or IDLE mode, the LCD on/off function can be controlled by this bit. In the SLEEP mode, the LCD is always off.

• **LCDCP Register**

Bit	7	6	5	4	3	2	1	0
Name	—	—	—	—	LCDPR	—	CPVS1	CPVS0
R/W	—	—	—	—	R/W	—	R/W	R/W
POR	—	—	—	—	0	—	0	0

Bit 7~4 Unimplemented, read as "0"

Bit 3 **LCDPR**: R type LCD power source selection
0: PLCD pin
1: R type internal charge pump
This bit is only available for R type LCD applications. When the LCDPR bit is cleared to 0, the R type LCD power will be derived from the PLCD pin and its internal charge pump circuit will be disabled. This internal charge pump will also be disabled when the C type LCD driver is selected by setting the RCT bit to 1 or the LCD driver is disabled by clearing the LCDEN bit to 0.

Bit 2 Unimplemented, read as "0"

Bit 1~0 **CPVS1~CPVS0**: R type internal charge pump output voltage selection
00: 3.3V
01: 3.0V
10: 2.7V
11: 4.5V

• **LCDC2 Register**

Bit	7	6	5	4	3	2	1	0
Name	LCDPCK2	LCDPCK1	LCDPCK0	—	—	DTYC1	DTYC0	BIAS
R/W	R/W	R/W	R/W	—	—	R/W	R/W	R/W
POR	0	0	0	—	—	0	0	0

Bit 7~5 **LCDPCK2~LCDPCK0**: C type LCD charge pump clock divider selection
000: 250Hz (f_{SUB}/128)
001: 500Hz (f_{SUB}/64)
010: 1kHz (f_{SUB}/32)
011: 2kHz (f_{SUB}/16)
100: 4kHz (f_{SUB}/8)
101: 8kHz (f_{SUB}/4)
110: 16kHz (f_{SUB}/2)
111: 16kHz (f_{SUB}/2)

Bit 4~3 Unimplemented, read as "0"

Bit 2~1 **DTYC1~DTYC0**: LCD duty selection
00: 1/4 duty – COM0~COM3 used, for both R and C types
01: 1/6 duty – COM0~COM5 used, for both R and C types
10: 1/8 duty – COM0~COM7 used, for R type only
11: Unimplemented
The unused COM pins can be configured as normal I/O or other pin-shared functions using the corresponding pin-shared selection register.

Bit 0 **BIAS**: LCD bias selection
0: 1/3 bias – for both R and C types
1: 1/4 bias – for R type only

The 1/4 bias voltage is assigned for R type 1/8 duty only while the 1/3 bias voltage can be assigned for 1/4 duty, 1/6 duty and 1/8 duty LCD driver. However, it is strongly recommended to use the 1/4 bias voltage for the 1/8 duty configuration.

LCD Voltage Source and Biasing

The time and amplitude varying signals generated by the LCD Driver function require the generation of several voltage levels for their operation. The devices can have either R type or C type biasing selected via a software control bit RCT. The R type or C type bias schemes have their own respective internal charge pump circuitry. When using the C type LCD, the C type internal charge pump will be enabled automatically and the LCDPR bit in the LCDCP register should be fixed at 0 to disable the R type internal charge pump.

R Type Biasing

For R type biasing the LCD voltage source can be supplied by the PLCD pin input or the R type internal charge pump regulator, selected by the LCDPR bit in the LCDCP register, to generate the internal biasing voltages. When the LCDPR bit is cleared to zero, the LCD driver power is supplied by the external PLCD pin. The source on the PLCD pin could be the microcontroller power supply or some other voltage source. If the LCDPR bit is set high, the LCD driver power is supplied by the R type internal charge pump circuit. There are four charge pump output voltage levels which are selected by the CPVS1~CPVS0 bits in the LCDCP register. If the R type internal charge pump circuit is used, an external 4.7μF capacitor should be connected to the external PLCD pin for output voltage stability.

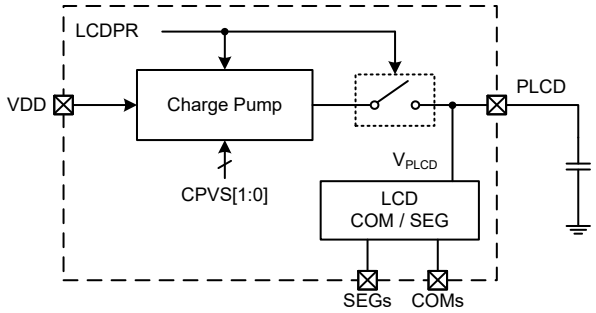

Note: When LCDPR=1, an external 4.7μF capacitor should be connected to the PLCD pin; when LCDPR=0, the capacitor can be removed.

R Type LCD Internal Charge Pump Circuit

LCDPR	CPVS[1:0]	R Type LCD Power Supply
0	xx	External PLCD pin input
1	00	R type internal charge pump output, 3.3V
	01	R type internal charge pump output, 3.0V
	10	R type internal charge pump output, 2.7V
	11	R type internal charge pump output, 4.5V

"x": Don't care

R Type LCD Driver Power Supply

For the R type 1/3 bias scheme, four voltage levels of V_{SS}, V_A, V_B and V_C are utilised. The voltage V_A is equal to V_{PLCD}. The voltage V_B is equal to $V_{PLCD}\times2/3$ while the voltage V_C is equal to $V_{PLCD}\times1/3$. For the R type 1/4 bias scheme, five voltage levels of V_{SS}, V_A, V_B, V_C and V_D are utilised. The voltage V_A is equal to V_{PLCD}. The voltage V_B is equal to $V_{PLCD}\times3/4$, the voltage V_C is equal to $V_{PLCD}\times2/4$ and the voltage V_D is equal to $V_{PLCD}\times1/4$. Note that here the V_{PLCD} voltage is the actual LCD voltage source determined by the LCDPR bit in the LCDCP register.

Different values of internal bias current can be selected using the LCDIS1~LCDIS0 bits in the LCDC0 register. The VMAX pin should be connected to the PLCD or VDD pin which provides the maximum voltage.

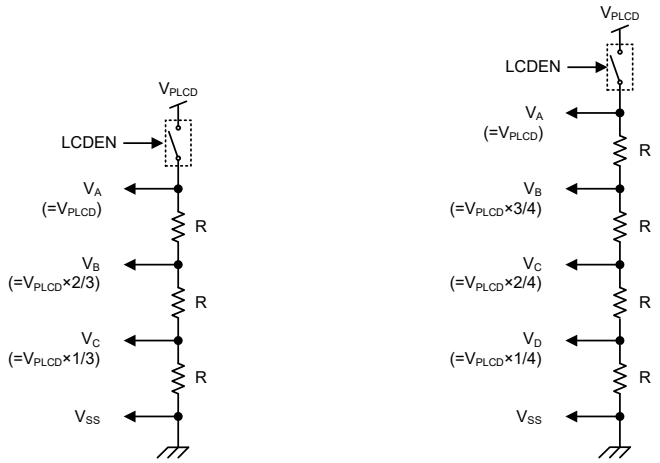

R Type 1/3 Bias **R Type 1/4 Bias**

Note: 1. The DC path will be switched off when the LCD is disabled.
2. The V_{PLCD} voltage can be supplied by the PLCD pin input or the internal charge pump regulator output.

R Type Bias Voltage Generation

C Type Biasing

For C type biasing the LCD voltage source can be supplied on the external pin PLCD, V1 or V2 or derived from the internal power source to generate the required biasing voltages. The C type bias voltage source is selected using the LCDP1 and LCDP0 bits in the LCDC0 register.

When the LCD voltage source is from the PLCD or V2 pin, the C type biasing scheme uses its internal charge pump circuit, which can generate voltages higher than what is supplied on PLCD or V2. This feature is useful in applications where the microcontroller supply voltage is less than the supply voltage required by the LCD. The C type LCD charge pump clock source is from the internal clock signal, f_{SUB}, which is divided by an internal divider circuit. The divider value is decided by the LCDPCK2~LCDPCK0 bits in the LCDC2 register. An additional charge pump capacitor must also be connected between pins C1 and C2 to generate the necessary voltage levels.

For C type 1/3 bias external power supply scheme, the LCD power can be supplied on PLCD, V1 or V2 pin. However, the LCD power is internally supplied on V_A, V_B or V_C for C type 1/3 bias internal power supply scheme. Four internally generated voltage levels V_{SS}, V_A, V_B and V_C are utilised. These bias voltages have different levels depending upon different LCD power supply schemes.

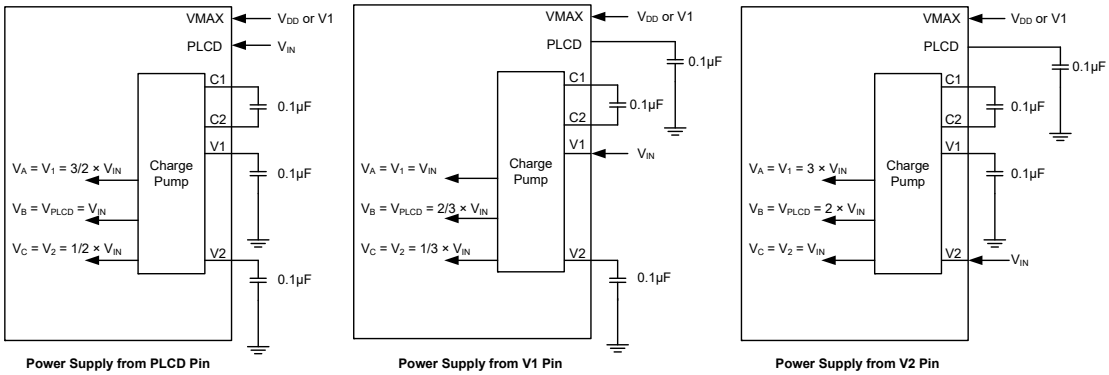

Note: The pin VMAX must be connected to the maximum voltage to prevent from the pad leakage.

C Type Bias External Power Supply Configuration – 1/3 Bias

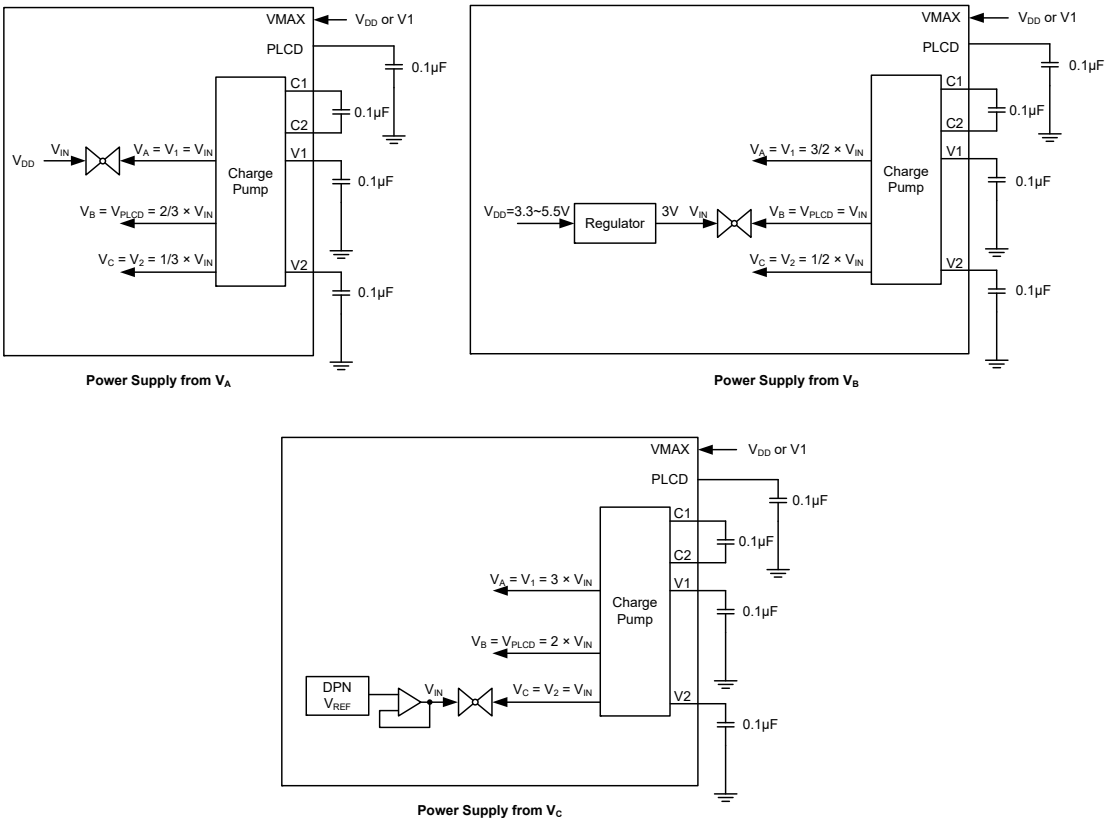

Note: The pin VMAX must be connected to the maximum voltage to prevent from the pad leakage.

C Type Bias Internal Power Supply Configuration – 1/3 Bias

C Type LCD Power Supply		V_A Voltage	V_B Voltage	V_C Voltage
External Power Supply	V_{IN} from V1 pin	V_{IN}	$2/3\times V_{IN}$	$1/3\times V_{IN}$
	V_{IN} from PLCD pin	$3/2\times V_{IN}$	V_{IN}	$1/2\times V_{IN}$
	V_{IN} from V2 pin	$3\times V_{IN}$	$2\times V_{IN}$	V_{IN}
Internal Power Supply	V_A (V_A=V_{DD})	V_{DD}	$2/3\times V_{DD}$	$1/3\times V_{DD}$
	V_B (V_B=3V)	3/2×3V	3V	1/2×3V
	V_C (V_C=DPN V_{REF})	3×DPN V_{REF}	2×DPN V_{REF}	DPN V_{REF}

C Type Bias Power Supply SchemeThe connection to the VMAX pin depends upon the voltage that is applied to the PLCD pin. It is extremely important to ensure that these charge pump generated internal voltages do not exceed the maximum V_{DD} voltage of 5.5V.

Condition	VMAX Connection
$V_{DD}>V_{PLCD}\times 1.5$	Connect VMAX to VDD
Otherwise	Connect VMAX to V1

C Type Bias VMAX Pin Connection

LCD Reset Status

The LCD has an internal reset function that is an OR function of the inverted LCDEN bit in the LCDC0 register and the SLEEP function. Clearing the LCDEN bit to zero will also reset the LCD function. The LCD function will be reset after the devices enter the SLEEP mode even if the LCDEN bit is set to 1 to enable the LCD driver function.

When the LCDEN bit is set to 1 to enable the LCD driver and then an MCU reset occurs, the LCD driver will be reset and the COM and SEG outputs will be in a floating state during the MCU reset duration. The reset operation will take a time of t_{RSTD}+t_{SST}. Refer to the System Start Up Time Characteristics for t_{RSTD} and t_{SST} details.

MCU Reset	SLEEP Mode	LCDEN	LCD Reset	COM & SEG Voltage Level
No	Off	1	No	Normal Operation
No	Off	0	Yes	Low
No	On	x	Yes	Low
Yes	x	x	Yes	Floating

"x": Don't care

Note: The Watchdog time-out reset in the IDLE or SLEEP Mode is excluded from the MCU Reset conditions.

LCD Reset Status

LCD Driver Output

The number of COM and SEG outputs supplied by the LCD driver, the biasing and waveform type selections are dependent upon how the LCD control bits are programmed.

The nature of Liquid Crystal Displays require that only AC voltages can be applied to their pixels as the application of DC voltages to LCD pixels may cause permanent damage. For this reason the relative contrast of an LCD display is controlled by the actual RMS voltage applied to each pixel, which is equal to the RMS value of the voltage on the COM pin minus the voltage applied to the SEG pin. This differential RMS voltage must be greater than the LCD saturation voltage for the pixel to be on and less than the threshold voltage for the pixel to be off.

The requirement to limit the DC voltage to zero and to control as many pixels as possible with a minimum number of connections requires that both a time and amplitude signal is generated and applied to the application LCD. These time and amplitude varying signals are automatically

generated by the LCD driver circuits in the microcontroller. What is known as the duty determines the number of common lines used, which are also known as backplanes or COMs. For example, the duty is 1/4 and equates to a COM number of 4, therefore defines the number of time divisions within each LCD signal frame. Two types of signal generation are also provided, known as Type A and Type B, the required type is selected via the TYPE bit in the LCDC0 register. Type B offers lower frequency signals, however lower frequencies may introduce flickering and influence display clarity.

R & C Type, 4-COM, 1/3 Bias

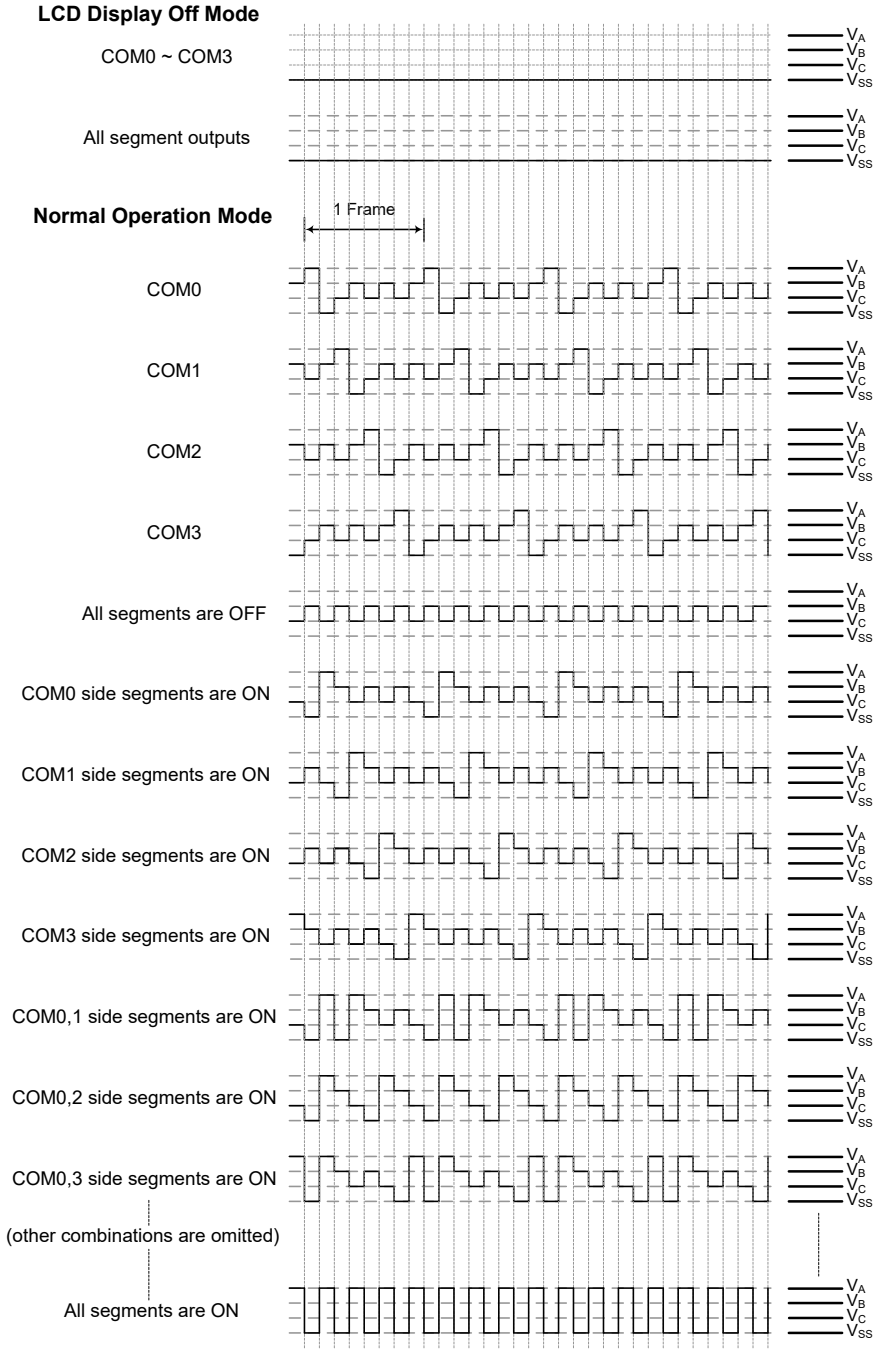

LCD Driver Output – Type A, 1/4 Duty, 1/3 Bias

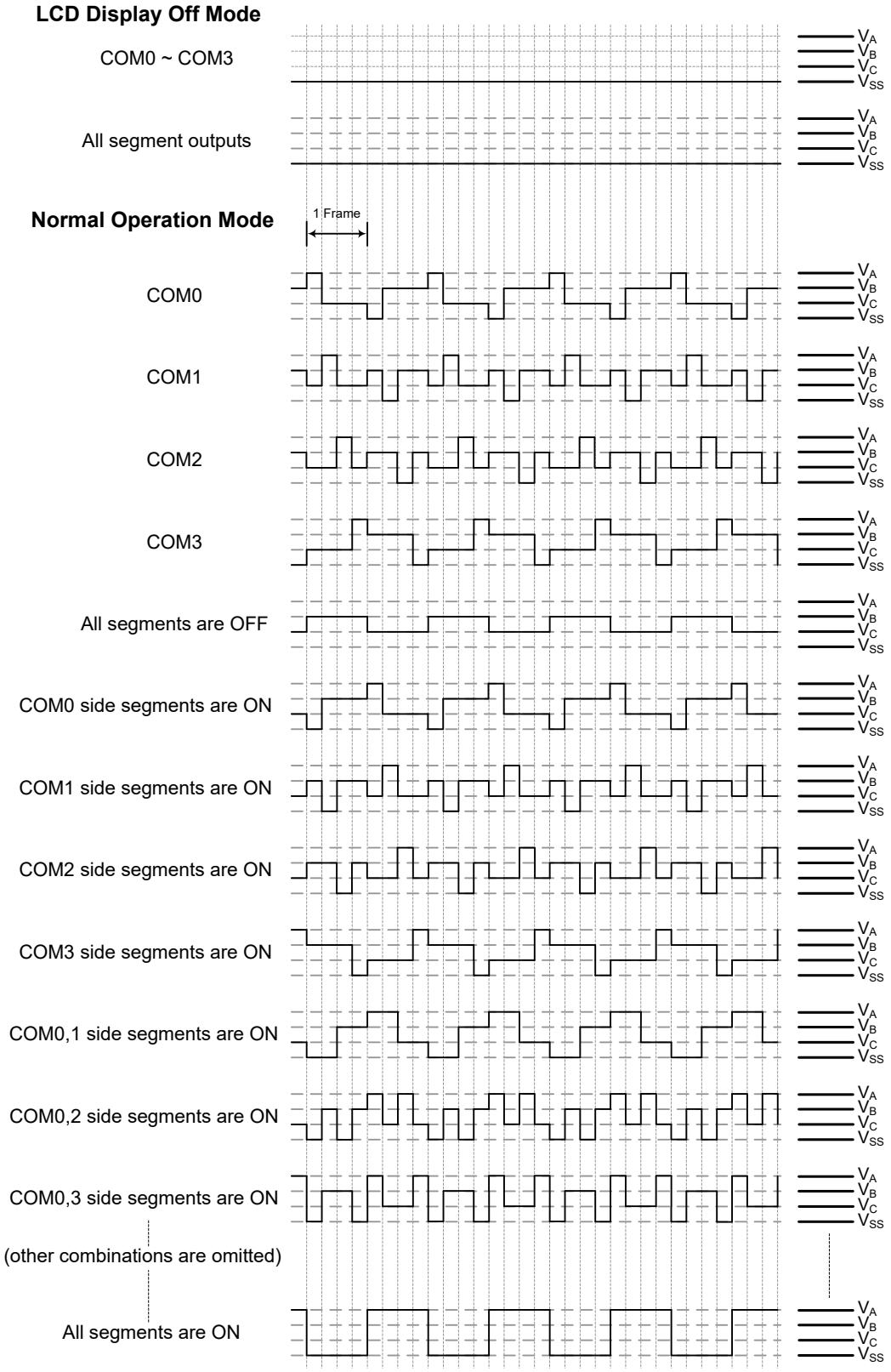

LCD Driver Output – Type B, 1/4 Duty, 1/3 Bias

R & C Type, 6-COM, 1/3 Bias

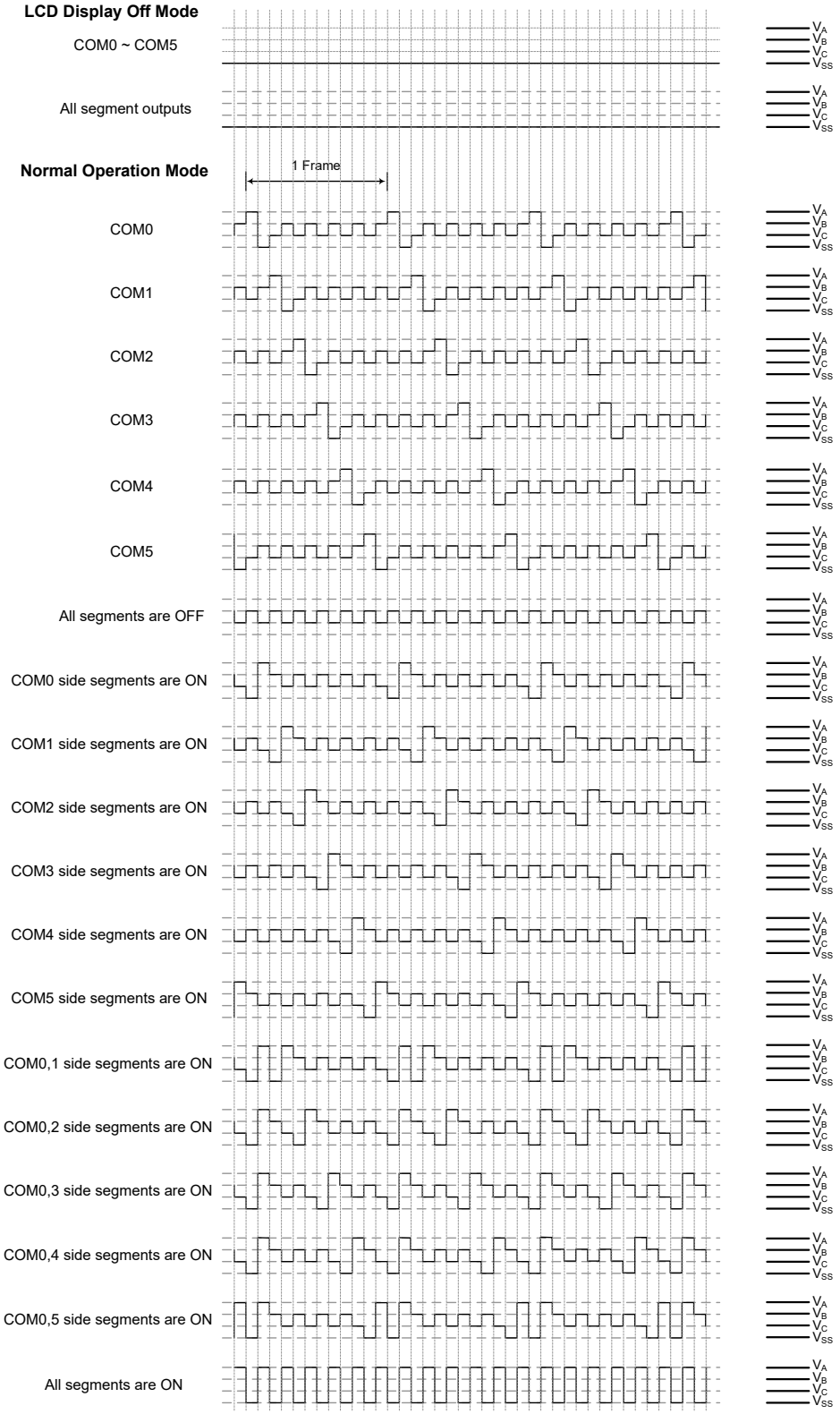

LCD Driver Output – Type A, 1/6 Duty, 1/3 Bias

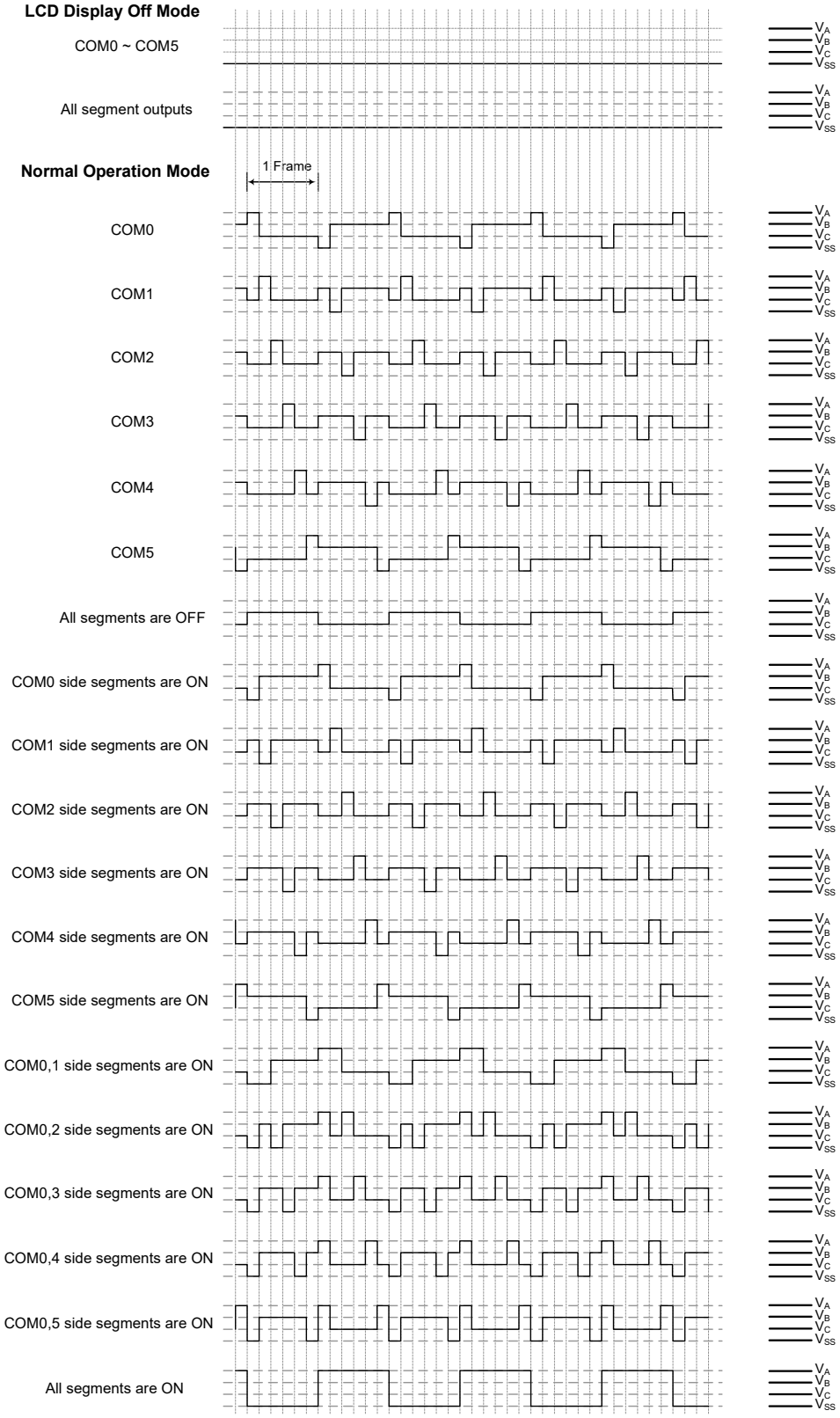

LCD Driver Output – Type B, 1/6 Duty, 1/3 Bias

R Type, 8-COM, 1/3 Bias

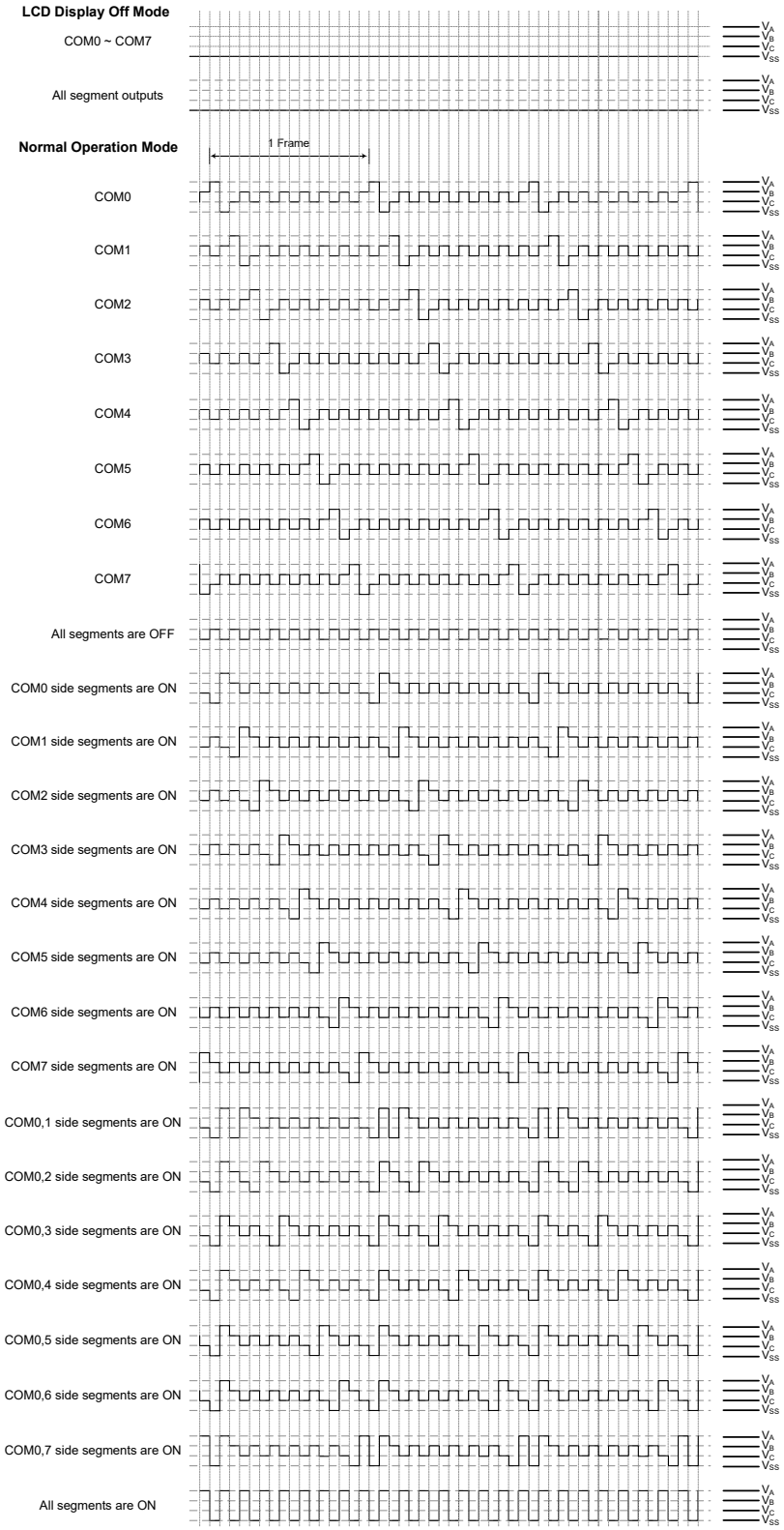

LCD Driver Output – Type A, 1/8 Duty, 1/3 Bias

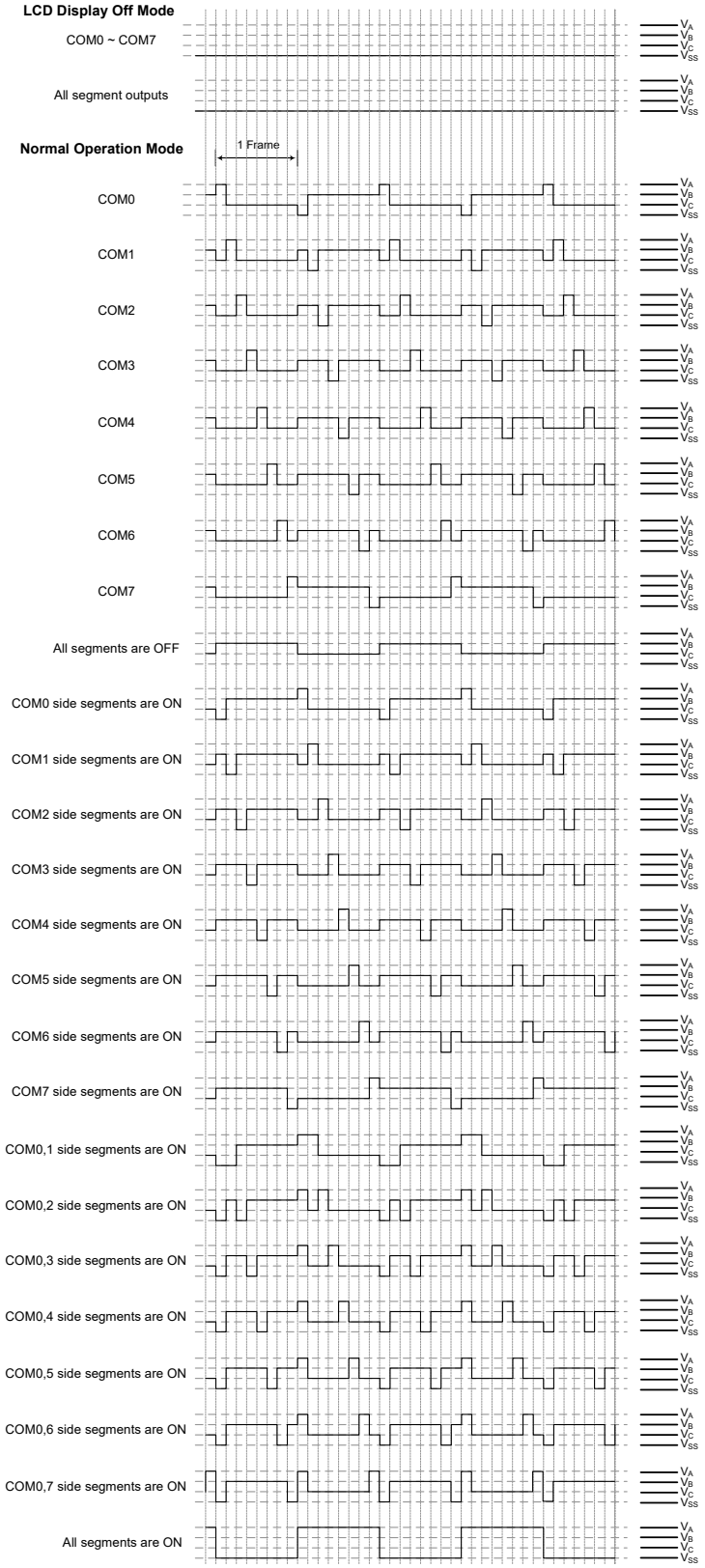

LCD Driver Output – Type B, 1/8 Duty, 1/3 Bias

R Type, 8-COM, 1/4 Bias

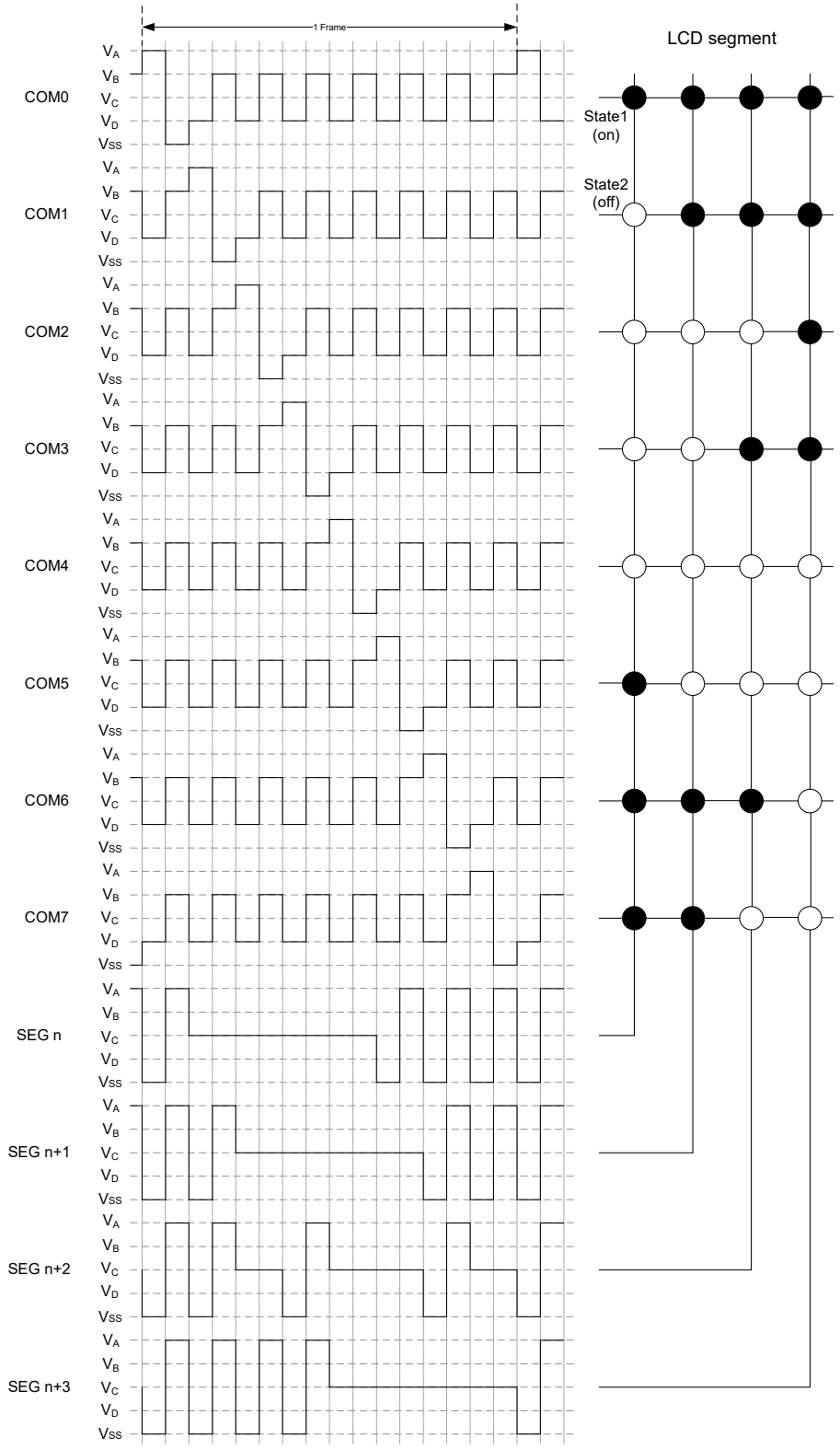

LCD Driver Output – Type A, 1/8 Duty, 1/4 Bias

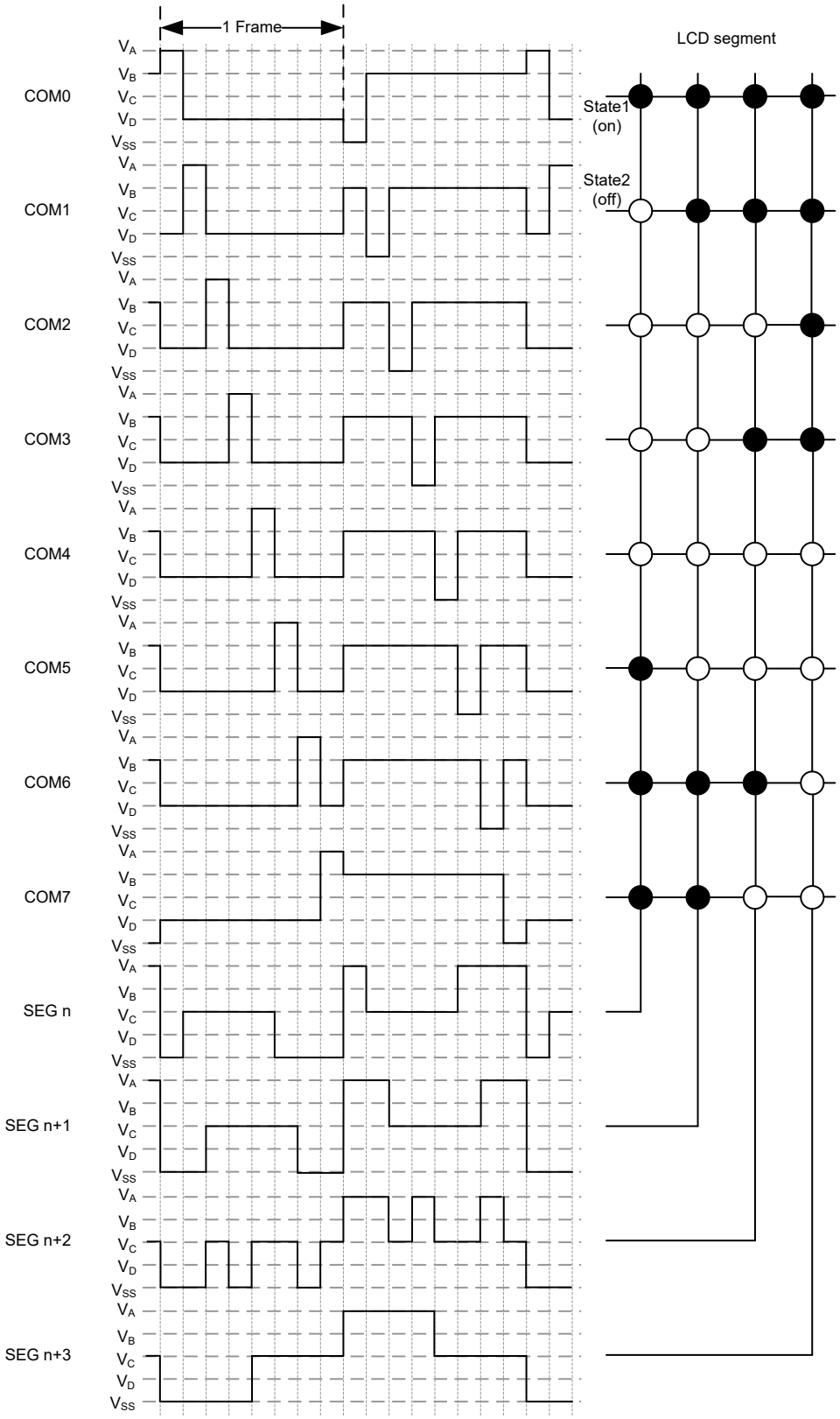

LCD Driver Output – Type B, 1/8 Duty, 1/4 Bias

Programming Considerations

Certain precautions must be taken when programming the LCD. One of these is to ensure that the LCD Memory is properly initialised after the microcontroller is powered on. Like the General Purpose Data Memory, the contents of the LCD Memory are in an unknown condition after power-on. As the contents of the LCD Memory will be mapped into the actual display, it is important to initialise this memory area into a known condition soon after applying power to obtain a proper display pattern.

Consideration must also be given to the capacitive load of the actual LCD used in the application. As the load presented to the microcontroller by LCD pixels can be generally modeled as mainly capacitive in nature, it is important that this is not excessive, a point that is particularly true in the case of the COM lines which may be connected to many LCD pixels. The accompanying diagram depicts the equivalent circuit of the LCD.

One additional consideration that must be taken into account is what happens when the LCD driver clock source is turned off. The LCDEN control bit in the LCDC0 register permits the display to be powered off to reduce power consumption. If this bit is zero, the driving signals to the display will cease, producing a blank display pattern but reducing any power consumption associated with the LCD.

After Power-on, note that as the LCDEN bit is cleared to zero, the display function will be disabled.

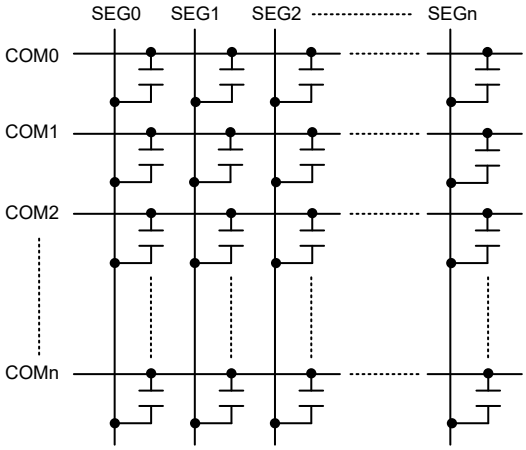

LCD Panel Equivalent Circuit

16-bit Multiplication Division Unit – MDU

The devices have a 16-bit Multiplication Division Unit, MDU, which integrates a 16-bit unsigned multiplier and a 32-bit/16-bit divider. The MDU, in replacing the software multiplication and division operations, can therefore save large amounts of computing time as well as the Program and Data Memory space. It also reduces the overall microcontroller loading and results in the overall system performance improvements.

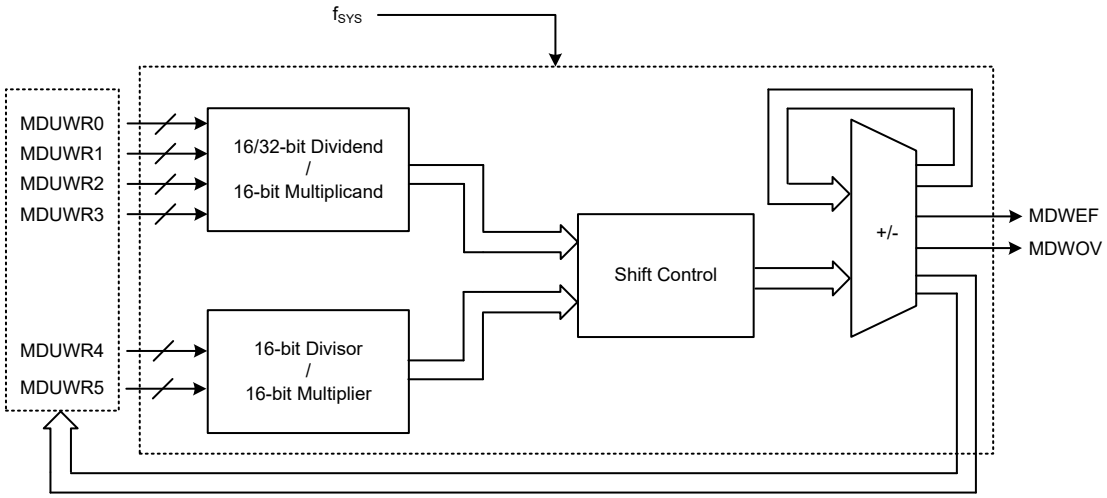

16-Bit MDU Block Diagram

MDU Registers

The multiplication and division operations are implemented in a specific way, a specific write access sequence of a series of MDU data registers. The status register, MDUWCTRL, provides the indications for the MDU operation. The data register each is used to store the data regarded as the different operand corresponding to different MDU operations.

Register Name	Bit							
	7	6	5	4	3	2	1	0
MDUWR0	D7	D6	D5	D4	D3	D2	D1	D0
MDUWR1	D7	D6	D5	D4	D3	D2	D1	D0
MDUWR2	D7	D6	D5	D4	D3	D2	D1	D0
MDUWR3	D7	D6	D5	D4	D3	D2	D1	D0
MDUWR4	D7	D6	D5	D4	D3	D2	D1	D0
MDUWR5	D7	D6	D5	D4	D3	D2	D1	D0
MDUWCTRL	MDWEF	MDWOV	—	—	—	—	—	—

MDU Register List

- **MDUWRn Register (n=0~5)**

Bit	7	6	5	4	3	2	1	0
Name	D7	D6	D5	D4	D3	D2	D1	D0
R/W	R/W	R/W	R/W	R/W	R/W	R/W	R/W	R/W
POR	x	x	x	x	x	x	x	x

"x": unknown

Bit 7~0 **D7~D0**: 16-bit MDU data register n

• **MDUWCTRL Register**

Bit	7	6	5	4	3	2	1	0
Name	MDWEF	MDWOV	—	—	—	—	—	—
R/W	R	R	—	—	—	—	—	—
POR	0	0	—	—	—	—	—	—

Bit 7 **MDWEF**: 16-bit MDU error flag
0: Normal
1: Abnormal
This bit will be set to 1 if the data register MDUWRn is written or read as the MDU operation is executing. This bit should be cleared to 0 by reading the MDUWCTRL register if it is equal to 1 and the MDU operation is completed.

Bit 6 **MDWOV**: 16-bit MDU overflow flag
0: No overflow occurs
1: Multiplication product > FFFFH or Divisor=0
When an operation is completed, this bit will be updated by hardware to a new value corresponding to the current operation situation.

Bit 5~0 Unimplemented, read as "0"

MDU Operation

For this MDU the multiplication or division operation is carried out in a specific way and is determined by the write access sequence of the six MDU data registers, MDUWR0~MDUWR5. The low byte data, regardless of the dividend, multiplicand, divisor or multiplier, must first be written into the corresponding MDU data register followed by the high byte data. All MDU operations will be executed after the MDUWR5 register is write-accessed together with the correct specific write access sequence of the MDUWRn. Note that it is not necessary to consecutively write data into the MDU data registers but must be in a correct write access sequence. Therefore, a non-write MDUWRn instruction or an interrupt, etc., can be inserted into the correct write access sequence without destroying the write operation. The relationship between the write access sequence and the MDU operation is shown in the following.

- 32-bit/16-bit division operation: Write data sequentially into the six MDU data registers from MDUWR0 to MDUWR5.
- 16-bit/16-bit division operation: Write data sequentially into the specific four MDU data registers in a sequence of MDUWR0, MDUWR1, MDUWR4 and MDUWR5 with no write access to MDUWR2 and MDUWR3.
- 16-bit×16-bit multiplication operation: Write data sequentially into the specific four MDU data register in a sequence of MDUWR0, MDUWR4, MDUWR1 and MDUWR5 with no write access to MDUWR2 and MDUWR3.

After the specific write access sequence is determined, the MDU will start to perform the corresponding operation. The calculation time necessary for these MDU operations are different. During the calculation time any read/write access to the six MDU data registers is forbidden. After the completion of each operation, it is necessary to check the operation status in the MDUWCTRL register to make sure that whether the operation is correct or not. Then the operation result can be read out from the corresponding MDU data registers in a specific read access sequence if the operation is correctly finished. The necessary calculation time for different MDU operations is listed in the following.

- 32-bit/16-bit division operation: $17\times t_{SYS}$.
- 16-bit/16-bit division operation: $9\times t_{SYS}$.
- 16-bit×16-bit multiplication operation: $11\times t_{SYS}$.

The operation results will be stored in the corresponding MDU data registers and should be read out from the MDU data registers in a specific read access sequence after the operation is completed. Note that it is not necessary to consecutively read data out from the MDU data registers but must be in a correct read access sequence. Therefore, a non-read MDUWRn instruction or an interrupt, etc., can be inserted into the correct read access sequence without destroying the read operation. The relationship between the operation result read access sequence and the MDU operation is shown in the following.

- 32-bit/16-bit division operation: Read the quotient from MDUWR0 to MDUWR3 and remainder from MDUWR4 and MDUWR5 sequentially.
- 16-bit/16-bit division operation: Read the quotient from MDUWR0 and MDUWR1 and remainder from MDUWR4 and MDUWR5 sequentially.
- 16-bit×16-bit multiplication operation: Read the product sequentially from MDUWR0 to MDUWR3.

The overall important points for the MDU read/write access sequence and calculation time are summarized in the following table. Note that the devices should not enter the IDLE or SLEEP mode until the MDU operation is totally completed, otherwise the MDU operation will fail.

Operations / Items	32-bit/16-bit Division	16-bit/16-bit Division	16-bit×16-bit Multiplication
Write Sequence First write ↓ ↓ ↓ ↓ Last write	Dividend Byte 0 written to MDUWR0 Dividend Byte 1 written to MDUWR1 Dividend Byte 2 written to MDUWR2 Dividend Byte 3 written to MDUWR3 Divisor Byte 0 written to MDUWR4 Divisor Byte 1 written to MDUWR5	Dividend Byte 0 written to MDUWR0 Dividend Byte 1 written to MDUWR1 Divisor Byte 0 written to MDUWR4 Divisor Byte 1 written to MDUWR5	Multiplicand Byte 0 written to MDUWR0 Multiplier Byte 0 written to MDUWR4 Multiplicand Byte 1 written to MDUWR1 Multiplier Byte 1 written to MDUWR5
Calculation Time	$17\times t_{SYS}$	$9\times t_{SYS}$	$11\times t_{SYS}$
Read Sequence First read ↓ ↓ ↓ ↓ Last read	Quotient Byte 0 read from MDUWR0 Quotient Byte 1 read from MDUWR1 Quotient Byte 2 read from MDUWR2 Quotient Byte 3 read from MDUWR3 Remainder Byte 0 read from MDUWR4 Remainder Byte 1 read from MDUWR5	Quotient Byte 0 read from MDUWR0 Quotient Byte 1 read from MDUWR1 Remainder Byte 0 read from MDUWR4 Remainder Byte 1 read from MDUWR5	Product Byte 0 read from MDUWR0 Product Byte 1 read from MDUWR1 Product Byte 2 read from MDUWR2 Product Byte 3 read from MDUWR3

MDU Operations Summary

Cyclic Redundancy Check – CRC

The Cyclic Redundancy Check, CRC, calculation unit is an error detection technique test algorithm and uses to verify data transmission or storage data correctness. A CRC calculation takes a data stream or a block of data as input and generates a 16-bit output remainder. Ordinarily, a data stream is suffixed by a CRC code and used as a checksum when being sent or stored. Therefore, the received or restored data stream is calculated by the same generator polynomial as described in the following section.

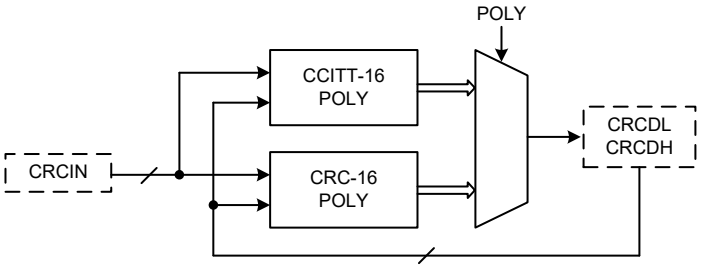

CRC Block Diagram

CRC Registers

The CRC generator contains an 8-bit CRC data input register, CRCIN, and a CRC checksum register pair, CRCDH and CRCDL. The CRCIN register is used to input new data and the CRCDH and CRCDL registers are used to hold the previous CRC calculation result. A CRC control register, CRCCR, is used to select which CRC generating polynomial is used.

Register Name	Bit							
	7	6	5	4	3	2	1	0
CRCCR	—	—	—	—	—	—	—	POLY
CRCIN	D7	D6	D5	D4	D3	D2	D1	D0
CRCDL	D7	D6	D5	D4	D3	D2	D1	D0
CRCDH	D7	D6	D5	D4	D3	D2	D1	D0

CRC Register List

• CRCCR Register

Bit	7	6	5	4	3	2	1	0
Name	—	—	—	—	—	—	—	POLY
R/W	—	—	—	—	—	—	—	R/W
POR	—	—	—	—	—	—	—	0

Bit 7~1 Unimplemented, read as “0”

Bit 0 **POLY**: 16-bit CRC generating polynomial selection
0: CRC-CCITT: $X^{16}+X^{12}+X^{5}+1$
1: CRC-16: $X^{16}+X^{15}+X^{2}+1$

• CRCIN Register

Bit	7	6	5	4	3	2	1	0
Name	D7	D6	D5	D4	D3	D2	D1	D0
R/W	R/W	R/W	R/W	R/W	R/W	R/W	R/W	R/W
POR	0	0	0	0	0	0	0	0

Bit 7~0 **D7~D0**: CRC input data register

• **CRCDL Register**

Bit	7	6	5	4	3	2	1	0
Name	D7	D6	D5	D4	D3	D2	D1	D0
R/W	R/W	R/W	R/W	R/W	R/W	R/W	R/W	R/W
POR	0	0	0	0	0	0	0	0

Bit 7~0 **D7~D0**: 16-bit CRC checksum low byte data register

• **CRCDH Register**

Bit	7	6	5	4	3	2	1	0
Name	D7	D6	D5	D4	D3	D2	D1	D0
R/W	R/W	R/W	R/W	R/W	R/W	R/W	R/W	R/W
POR	0	0	0	0	0	0	0	0

Bit 7~0 **D7~D0**: 16-bit CRC checksum high byte data register

CRC Operation

The CRC generator provides the 16-bit CRC result calculation based on the CRC16 and CCITT CRC16 polynomials. In this CRC generator, there are only these two polynomials available for the numeric values calculation. It cannot support the 16-bit CRC calculations based on any other polynomials.

The following two expressions can be used for the CRC generating polynomial which is determined using the POLY bit in the CRC control register, CRCCR. The CRC calculation result is called as the CRC checksum, CRCSUM, and stored in the CRC checksum register pair, CRCDH and CRCDL.

- CRC-CCITT: $X^{16}+X^{12}+X^{5}+1$.
- CRC-16: $X^{16}+X^{15}+X^{2}+1$.

CRC Computation

Each write operation to the CRCIN register creates a combination of the previous CRC value stored in the CRCDH and CRCDL registers and the new data input. The CRC unit calculates the CRC data register value is based on byte by byte. It will take one MCU instruction cycle to calculate the CRC checksum.

CRC Calculation Procedures

1. Clear the checksum register pair, CRCDH and CRCDL.
2. Execute an “Exclusive OR” operation with the 8-bit input data byte and the 16-bit CRCSUM high byte. The result is called the temporary CRCSUM.
3. Shift the temporary CRCSUM value left by one bit and move a “0” into the LSB.
4. Check the shifted temporary CRCSUM value after procedure 3.

   If the MSB is 0, then this shifted temporary CRCSUM will be considered as a new temporary CRCSUM.

   Otherwise, execute an “Exclusive OR” operation with the shifted temporary CRCSUM in procedure 3 and a data “8005H”. Then the operation result will be regarded as the new temporary CRCSUM.

   Note that the data to be perform an “Exclusive OR” operation is “8005H” for the CRC-16 polynomial while for the CRC-CCITT polynomial the data is “1021H”.
5. Repeat the procedure 3 ~ procedure 4 until all bits of the input data byte are completely calculated.

6. Repeat the procedure 2 ~ procedure 5 until all of the input data bytes are completely calculated. Then, the latest calculated result is the final CRC checksum, CRCSUM.

CRC Calculation Examples

- Write 1 byte input data into the CRCIN register and the corresponding CRC checksum are individually calculated as the following table shown.

CRC Data Input / CRC Polynomial	00H	01H	02H	03H	04H	05H	06H	07H
CRC-CCITT ($X^{16}+X^{12}+X^5+1$)	0000H	1021H	2042H	3063H	4084H	50A5H	60C6H	70E7H
CRC-16 ($X^{16}+X^{15}+X^2+1$)	0000H	8005H	800FH	000AH	801BH	001EH	0014H	8011H

Note: The initial value of the CRC checksum register pair, CRCDH and CRCDL, is zero before each CRC input data is written into the CRCIN register.

- Write 4 bytes input data into the CRCIN register sequentially and the CRC checksum are sequentially listed in the following table.

CRC Data Input / CRC Polynomial	CRCIN = 78H→56H→34H→12H
CRC-CCITT ($X^{16}+X^{12}+X^5+1$)	(CRCDH, CRCDL) = FF9FH→BBC3H→A367H→D0FAH
CRC-16 ($X^{16}+X^{15}+X^2+1$)	(CRCDH, CRCDL) = 0110h→91F1h→F2DEh→5C43h

Note: The initial value of the CRC checksum register pair, CRCDH and CRCDL, is zero before the sequential CRC data input operation.

Program Memory CRC Checksum Calculation Example

1. Clear the checksum register pair, CRCDH and CRCDL.
2. Select the CRC-CCITT or CRC-16 polynomial as the generating polynomial using the POLY bit in the CRCCR register.
3. Execute the table read instruction to read the program memory data value.
4. Write the table data low byte into the CRCIN register and execute the CRC calculation with the current CRCSUM value. Then a new CRCSUM result will be obtained and stored in the CRC checksum register pair, CRCDH and CRCDL.
5. Write the table data high byte into the CRCIN register and execute the CRC calculation with the current CRCSUM value. Then a new CRCSUM result will be obtained and stored in the CRC checksum register pair, CRCDH and CRCDL.
6. Repeat the procedure 3 ~ procedure 5 to read the next program memory data value and execute the CRC calculation until all program memory data are read followed by the sequential CRC calculation. Then the value in the CRC checksum register pair is the final CRC calculation result.

Low Voltage Detector – LVD

The devices have a Low Voltage Detector function, also known as LVD. This enabled the devices to monitor the power supply voltage, V_{DD}, or the LVDIN pin input voltage, and provide a warning signal should it fall below a certain level. This function may be especially useful in battery applications where the supply voltage will gradually reduce as the battery ages, as it allows an early warning battery low signal to be generated. The Low Voltage Detector also has the capability of generating an interrupt signal.

LVD Register

The Low Voltage Detector function is controlled using a single register with the name LVDC. Three bits in this register, V_{LVD2}~V_{LVD0}, are used to select one of eight fixed voltages below which a low voltage condition will be determined. A low voltage condition is indicated when the LVDO bit is set. If the LVDO bit is low, this indicates that the V_{DD} voltage or the LVDIN pin input voltage is above the preset low voltage value. The LVDEN bit is used to control the overall on/off function of the low voltage detector. Setting the bit high will enable the low voltage detector. Clearing the bit to zero will switch off the internal low voltage detector circuits. As the low voltage detector will consume a certain amount of power, it may be desirable to switch off the circuit when not in use, an important consideration in power sensitive battery powered applications.

- **LVDC Register**

Bit	7	6	5	4	3	2	1	0
Name	—	—	LVDO	LVDEN	VBGEN	VLVD2	VLVD1	VLVD0
R/W	—	—	R	R/W	R/W	R/W	R/W	R/W
POR	—	—	0	0	0	0	0	0

Bit 7~6 Unimplemented, read as “0”

Bit 5 **LVDO**: LVD output flag
0: No Low Voltage Detected
1: Low Voltage Detected

Bit 4 **LVDEN**: Low voltage detector enable control
0: Disable
1: Enable

Bit 3 **VBGEN**: Bandgap voltage output enable control
0: Disable
1: Enable

Note that the Bandgap circuit is enabled when the LVD or LVR function is enabled or when the VBGEN bit is set to 1.

Bit 2~0 **VLVD2~VLVD0**: LVD voltage selection
000: $V_{LVDIN} \leq 1.23V$
001: 2.2V
010: 2.4V
011: 2.7V
100: 3.0V
101: 3.3V
110: 3.6V
111: 4.0V

When the VLVD2~VLVD0 bits are set to 000B, the LVD function will be implemented by comparing the LVDIN pin input voltage with the LVD reference voltage of 1.23V. When the VLVD2~VLVD0 bits are set to any other value except 000B, the LVD function will operate by comparing the V_{DD} voltage level with the LVD reference voltage with a specific voltage value which is generated by the internal LVD circuit.

LVD Operation

The Low Voltage Detector function operates by comparing the power supply voltage, V_{DD}, or the LVDIN pin input voltage, with a pre-specified voltage level stored in the LVDC register. This has a range of between 1.23V and 4.0V. When the power supply voltage, V_{DD}, or the LVDIN pin input voltage, falls below this pre-determined value, the LVDO bit will be set high indicating a low power supply voltage condition. When the devices enter the SLEEP mode, the low voltage detector will be automatically disabled even if the LVDEN bit is set high. After enabling the Low Voltage Detector, a time delay t_{LVDS} should be allowed for the circuitry to stabilise before reading the LVDO bit. Note also that as the V_{DD} or the LVDIN pin input voltage may rise and fall rather slowly, at the voltage nears that of V_{LVD}, there may be multiple bit LVDO transitions.

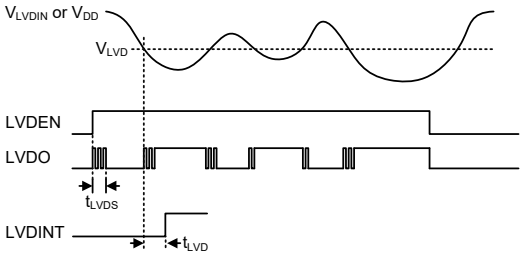

LVD Operation

The Low Voltage Detector also has its own interrupt which is contained within one of the Multi-function interrupts, providing an alternative means of low voltage detection, in addition to polling the LVDO bit. The interrupt will only be generated after a delay of t_{LVD} after the LVDO bit has been set high by a low voltage condition. In this case, the LVF interrupt request flag will be set, causing an interrupt to be generated if V_{DD} or the LVDIN pin input voltage falls below the preset LVD voltage. This will cause the devices to wake up from the IDLE Mode, however if the Low Voltage Detector wake-up function is not required then the LVF flag should be first set high before the devices enter the IDLE Mode.

Interrupts

Interrupts are an important part of any microcontroller system. When an external event or an internal function such as a Timer Module or an A/D converter requires microcontroller attention, their corresponding interrupt will enforce a temporary suspension of the main program allowing the microcontroller to direct attention to their respective needs. The devices contain several external interrupt and internal interrupt functions. The external interrupts are generated by the action of the external INT0~INT1 pins, while the internal interrupts are generated by various internal functions such as the TMs, Time Bases, LVD, EEPROM, SIM, UART and the A/D converter, etc.

Interrupt Registers

Overall interrupt control, which basically means the setting of request flags when certain microcontroller conditions occur and the setting of interrupt enable bits by the application program, is controlled by a series of registers, located in the Special Purpose Data Memory, as shown in the accompanying table. The registers fall into three categories. The first is the INTC0~INTC3 registers which setup the primary interrupts, the second is the MFI0~MFI3 registers which setup the Multi-function interrupts. Finally there is an INTEG register to setup the external interrupt trigger edge type.

Each register contains a number of enable bits to enable or disable individual registers as well as interrupt flags to indicate the presence of an interrupt request. The naming convention of these

follows a specific pattern. First is listed an abbreviated interrupt type, then the (optional) number of that interrupt followed by either an "E" for enable/disable bit or "F" for request flag.

Function	Enable Bit	Request Flag	Notes
Global	EMI	—	—
INTn Pin	INTnE	INTnF	n=0~1
A/D Converter	ADE	ADF	—
Multi-function	MFnE	MFnF	n=0~2 for BH67F5265 n=0~3 for BH67F5275
Time Base	TBnE	TBnF	n=0~1
SIM	SIME	SIMF	—
SPI	SPIE	SPIF	—
UART	URE	URF	—
LVD	LVE	LVF	—
EEPROM erase or write operation	DEE	DEF	—
STM	STMPE	STMPF	—
	STMAE	STMAF	—
PTM	PTMnPE	PTMnPF	n=0~2
	PTMnAE	PTMnAF	n=0~2
ATM	ATMPE	ATMPF	For BH67F5275
	ATMAE	ATMAF	For BH67F5275
	ATMBE	ATMBF	For BH67F5275

Interrupt Register Bit Naming Conventions

Register Name	Bit							
	7	6	5	4	3	2	1	0
INTEG	—	—	—	—	INT1S1	INT1S0	INT0S1	INT0S0
INTC0	—	ADF	INT1F	INT0F	ADE	INT1E	INT0E	EMI
INTC1	TB0F	MF2F	MF1F	MF0F	TB0E	MF2E	MF1E	MF0E
INTC2	URF	SPIF	SIMF	TB1F	URE	SPIE	SIME	TB1E
INTC3 (BH67F5275)	—	—	—	MF3F	—	—	—	MF3E
MFI0	PTM0AF	PTM0PF	STMAF	STMPF	PTM0AE	PTM0PE	STMAE	STMPE
MFI1	PTM2AF	PTM2PF	PTM1AF	PTM1PF	PTM2AE	PTM2PE	PTM1AE	PTM1PE
MFI2	—	—	DEF	LVF	—	—	DEE	LVE
MFI3 (BH67F5275)	—	ATMBF	ATMAF	ATMPF	—	ATMBE	ATMAE	ATMPE

Interrupt Register List

- **INTEG Register**

Bit	7	6	5	4	3	2	1	0
Name	—	—	—	—	INT1S1	INT1S0	INT0S1	INT0S0
R/W	—	—	—	—	R/W	R/W	R/W	R/W
POR	—	—	—	—	0	0	0	0

Bit 7~4 Unimplemented, read as "0"

Bit 3~2 **INT1S1~INT1S0**: Interrupt edge control for INT1 pin
00: Disable
01: Rising edge
10: Falling edge
11: Rising and falling edges

Bit 1~0 **INT0S1~INT0S0**: Interrupt edge control for INT0 pin
00: Disable
01: Rising edge
10: Falling edge
11: Rising and falling edges

• **INTC0 Register**

Bit	7	6	5	4	3	2	1	0
Name	—	ADF	INT1F	INT0F	ADE	INT1E	INT0E	EMI
R/W	—	R/W	R/W	R/W	R/W	R/W	R/W	R/W
POR	—	0	0	0	0	0	0	0

Bit 7 Unimplemented, read as "0"

Bit 6 **ADF**: A/D Converter interrupt request flag
0: No request
1: Interrupt request

Bit 5 **INT1F**: INT1 interrupt request flag
0: No request
1: Interrupt request

Bit 4 **INT0F**: INT0 interrupt request flag
0: No request
1: Interrupt request

Bit 3 **ADE**: A/D Converter interrupt control
0: Disable
1: Enable

Bit 2 **INT1E**: INT1 interrupt control
0: Disable
1: Enable

Bit 1 **INT0E**: INT0 interrupt control
0: Disable
1: Enable

Bit 0 **EMI**: Global interrupt control
0: Disable
1: Enable

• **INTC1 Register**

Bit	7	6	5	4	3	2	1	0
Name	TB0F	MF2F	MF1F	MF0F	TB0E	MF2E	MF1E	MF0E
R/W	R/W	R/W	R/W	R/W	R/W	R/W	R/W	R/W
POR	0	0	0	0	0	0	0	0

Bit 7 **TB0F**: Time Base 0 request flag
0: No request
1: Interrupt request

Bit 6 **MF2F**: Multi-function 2 interrupt request flag
0: No request
1: Interrupt request

Bit 5 **MF1F**: Multi-function 1 interrupt request flag
0: No request
1: Interrupt request

Bit 4 **MF0F**: Multi-function 0 interrupt request flag
0: No request
1: Interrupt request

Bit 3 **TB0E**: Time Base 0 interrupt control
0: Disable
1: Enable

Bit 2 **MF2E**: Multi-function 2 interrupt control
0: Disable
1: Enable

Bit 1 **MF1E**: Multi-function 1 interrupt control
0: Disable
1: Enable

Bit 0 **MF0E**: Multi-function 0 interrupt control
0: Disable
1: Enable

• **INTC2 Register**

Bit	7	6	5	4	3	2	1	0
Name	URF	SPIF	SIMF	TB1F	URE	SPIE	SIME	TB1E
R/W	R/W	R/W	R/W	R/W	R/W	R/W	R/W	R/W
POR	0	0	0	0	0	0	0	0

Bit 7 **URF**: UART transfer interrupt request flag
0: No request
1: Interrupt request

Bit 6 **SPIF**: SPI interrupt request flag
0: No request
1: Interrupt request

Bit 5 **SIMF**: SIM interrupt request flag
0: No request
1: Interrupt request

Bit 4 **TB1F**: Time Base 1 request flag
0: No request
1: Interrupt request

Bit 3 **URE**: UART transfer interrupt control
0: Disable
1: Enable

Bit 2 **SPIE**: SPI interrupt control
0: Disable
1: Enable

Bit 1 **SIME**: SIM interrupt control
0: Disable
1: Enable

Bit 0 **TB1E**: Time Base 1 interrupt control
0: Disable
1: Enable

• **INTC3 Register – BH67F5275**

Bit	7	6	5	4	3	2	1	0
Name	—	—	—	MF3F	—	—	—	MF3E
R/W	—	—	—	R/W	—	—	—	R/W
POR	—	—	—	0	—	—	—	0

Bit 7~5 Unimplemented, read as “0”

Bit 4 **MF3F**: Multi-function 3 interrupt request flag
0: No request
1: Interrupt request

Bit 3~1 Unimplemented, read as "0"

Bit 0 **MF3E**: Multi-function 3 interrupt control
0: Disable
1: Enable

• **MFI0 Register**

Bit	7	6	5	4	3	2	1	0
Name	PTM0AF	PTM0PF	STMAF	STMPF	PTM0AE	PTM0PE	STMAE	STMPE
R/W	R/W	R/W	R/W	R/W	R/W	R/W	R/W	R/W
POR	0	0	0	0	0	0	0	0

Bit 7 **PTM0AF**: PTM0 Comparator A match Interrupt request flag
0: No request
1: Interrupt request

Bit 6 **PTM0PF**: PTM0 Comparator P match Interrupt request flag
0: No request
1: Interrupt request

Bit 5 **STMAF**: STM Comparator A match interrupt request flag
0: No request
1: Interrupt request

Bit 4 **STMPF**: STM Comparator P match interrupt request flag
0: No request
1: Interrupt request

Bit 3 **PTM0AE**: PTM0 Comparator A match Interrupt control
0: Disable
1: Enable

Bit 2 **PTM0PE**: PTM0 Comparator P match Interrupt control
0: Disable
1: Enable

Bit 1 **STMAE**: STM Comparator A match interrupt control
0: Disable
1: Enable

Bit 0 **STMPE**: STM Comparator P match interrupt control
0: Disable
1: Enable

• **MFI1 Register**

Bit	7	6	5	4	3	2	1	0
Name	PTM2AF	PTM2PF	PTM1AF	PTM1PF	PTM2AE	PTM2PE	PTM1AE	PTM1PE
R/W	R/W	R/W	R/W	R/W	R/W	R/W	R/W	R/W
POR	0	0	0	0	0	0	0	0

Bit 7 **PTM2AF**: PTM2 Comparator A match Interrupt request flag
0: No request
1: Interrupt request

Bit 6 **PTM2PF**: PTM2 Comparator P match Interrupt request flag
0: No request
1: Interrupt request

Bit 5 **PTM1AF**: PTM1 Comparator A match interrupt request flag
0: No request
1: Interrupt request

Bit 4 **PTM1PF**: PTM1 Comparator P match interrupt request flag
0: No request
1: Interrupt request

Bit 3 **PTM2AE**: PTM2 Comparator A match Interrupt control
0: Disable
1: Enable

Bit 2 **PTM2PE**: PTM2 Comparator P match Interrupt control
0: Disable
1: Enable

Bit 1 **PTM1AE**: PTM1 Comparator A match interrupt control
0: Disable
1: Enable

Bit 0 **PTM1PE**: PTM1 Comparator P match interrupt control
0: Disable
1: Enable

- **MFI2 Register**

Bit	7	6	5	4	3	2	1	0
Name	—	—	DEF	LVF	—	—	DEE	LVE
R/W	—	—	R/W	R/W	—	—	R/W	R/W
POR	—	—	0	0	—	—	0	0

Bit 7~6 Unimplemented, read as “0”

Bit 5 **DEF**: Data EEPROM interrupt request flag
0: No request
1: Interrupt request

Bit 4 **LVF**: LVD Interrupt request flag
0: No request
1: Interrupt request

Bit 3~2 Unimplemented, read as “0”

Bit 1 **DEE**: Data EEPROM interrupt control
0: Disable
1: Enable

Bit 0 **LVE**: LVD Interrupt control
0: Disable
1: Enable

- **MFI3 Register – BH67F5275**

Bit	7	6	5	4	3	2	1	0
Name	—	ATMBF	ATMAF	ATMPF	—	ATMBE	ATMAE	ATMPE
R/W	—	R/W	R/W	R/W	—	R/W	R/W	R/W
POR	—	0	0	0	—	0	0	0

Bit 7 Unimplemented, read as “0”

Bit 6 **ATMBF**: ATM Comparator B match Interrupt request flag
0: No request
1: Interrupt request

Bit 5 **ATMAF**: ATM Comparator A match interrupt request flag
0: No request
1: Interrupt request

Bit 4 **ATMPF**: ATM Comparator P match interrupt request flag
0: No request
1: Interrupt request

Bit 3 Unimplemented, read as “0”

Bit 2 **ATMBE**: ATM Comparator B match Interrupt control
0: Disable
1: Enable

Bit 1 **ATMAE**: ATM Comparator A match interrupt control
0: Disable
1: Enable

Bit 0 **ATMPE**: ATM Comparator P match interrupt control
0: Disable
1: Enable

Interrupt Operation

When the conditions for an interrupt event occur, such as a TM Comparator P or Comparator A match or A/D conversion completion etc., the relevant interrupt request flag will be set. Whether the request flag actually generates a program jump to the relevant interrupt vector is determined by the condition of the interrupt enable bit. If the enable bit is set high then the program will jump to its relevant vector; if the enable bit is zero then although the interrupt request flag is set an actual interrupt will not be generated and the program will not jump to the relevant interrupt vector. The global interrupt enable bit, if cleared to zero, will disable all interrupts.

When an interrupt is generated, the Program Counter, which stores the address of the next instruction to be executed, will be transferred onto the stack. The Program Counter will then be loaded with a new address which will be the value of the corresponding interrupt vector. The microcontroller will then fetch its next instruction from this interrupt vector. The instruction at this vector will usually be a “JMP” which will jump to another section of program which is known as the interrupt service routine. Here is located the code to control the appropriate interrupt. The interrupt service routine must be terminated with a “RETI”, which retrieves the original Program Counter address from the stack and allows the microcontroller to continue with normal execution at the point where the interrupt occurred.

The various interrupt enable bits, together with their associated request flags, are shown in the accompanying diagrams with their order of priority. Some interrupt sources have their own individual vector while others share the same multi-function interrupt vector. Once an interrupt subroutine is serviced, all the other interrupts will be blocked, as the global interrupt enable bit, EMI bit will be cleared automatically. This will prevent any further interrupt nesting from occurring. However, if other interrupt requests occur during this interval, although the interrupt will not be immediately serviced, the request flag will still be recorded.

If an interrupt requires immediate servicing while the program is already in another interrupt service routine, the EMI bit should be set after entering the routine, to allow interrupt nesting. If the stack is full, the interrupt request will not be acknowledged, even if the related interrupt is enabled, until the Stack Pointer is decremented. If immediate service is desired, the stack must be prevented from becoming full. In case of simultaneous requests, the accompanying diagram shows the priority that is applied. All of the interrupt request flags when set will wake-up the devices if they are in SLEEP or IDLE Mode, however to prevent a wake-up from occurring the corresponding flag should be set before the devices are in SLEEP or IDLE Mode.

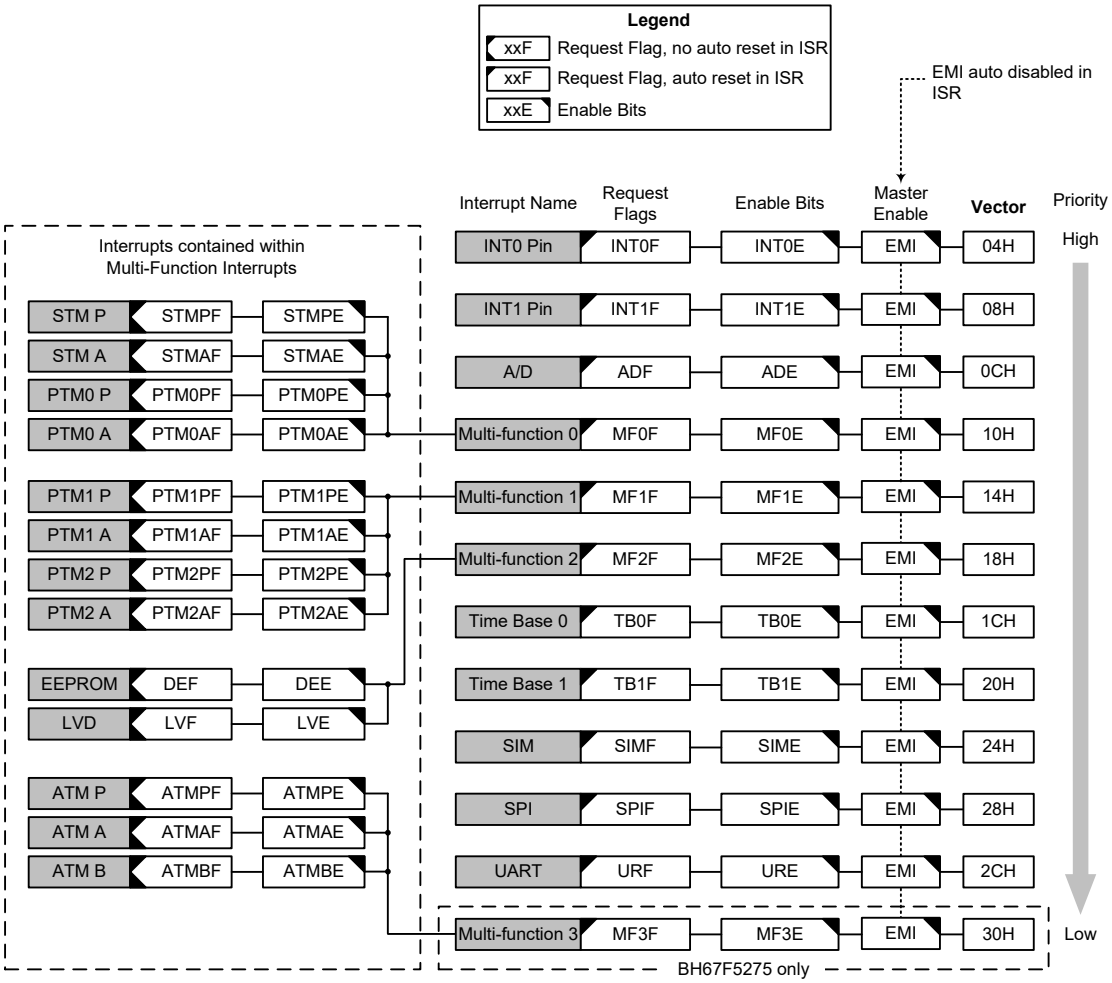

Interrupt Structure

External Interrupts

The external interrupts are controlled by signal transitions on the pins INT0~INT1. An external interrupt request will take place when the external interrupt request flags, INT0F~INT1F, are set, which will occur when a transition, whose type is chosen by the edge select bits, appears on the external interrupt pins. To allow the program to branch to their respective interrupt vector address, the global interrupt enable bit, EMI, and respective external interrupt enable bits, INT0E~INT1E, must first be set. Additionally the correct interrupt edge type must be selected using the INTEG register to enable the external interrupt function and to choose the trigger edge type. As the external interrupt pins are pin-shared with I/O pins, they can only be configured as external interrupt pins if their external interrupt enable bit in the corresponding interrupt register has been set and the external interrupt pin is selected by the corresponding pin-shared function selection bits. The pin must also be setup as an input by setting the corresponding bit in the port control register. When the interrupt is enabled, the stack is not full and the correct transition type appears on the external interrupt pins, a subroutine call to the corresponding external interrupt vector, will take place. When the interrupt is serviced, the external interrupt request flags, INT0F~INT1F, will be automatically reset and the EMI bit will be automatically cleared to disable other interrupts. Note that any pull-high resistor selections on the external interrupt pins will remain valid even if the pin is used as an external interrupt input.

The INTEG register is used to select the type of active edge that will trigger the external interrupt. A choice of either rising or falling or both edge types can be chosen to trigger an external interrupt. Note that the INTEG register can also be used to disable the external interrupt function.

A/D Converter Interrupt

The A/D Converter interrupt is controlled by the termination of an A/D conversion process. An A/D Converter Interrupt request will take place when the A/D Converter Interrupt request flag, ADF, is set, which occurs when the A/D conversion process finishes. To allow the program to branch to its respective interrupt vector address, the global interrupt enable bit, EMI, and A/D Interrupt enable bit, ADE, must first be set. When the interrupt is enabled, the stack is not full and the A/D conversion process has ended, a subroutine call to the A/D Converter Interrupt vector will take place. When the interrupt is serviced, the A/D Converter Interrupt flag, ADF, will be automatically cleared. The EMI bit will also be automatically cleared to disable other interrupts.

Multi-function Interrupts

Within these devices there are up to four Multi-function interrupts. Unlike the other independent interrupts, these interrupts have no independent source, but rather are formed from other existing interrupt sources, namely the TM interrupts, LVD interrupt and EEPROM erase or write operation interrupt.

A Multi-function interrupt request will take place when any of the Multi-function interrupt request flags MFnF are set. The Multi-function interrupt flags will be set when any of their included functions generate an interrupt request flag. When the Multi-function interrupt is enabled and the stack is not full, and either one of the interrupts contained within each of Multi-function interrupt occurs, a subroutine call to one of the Multi-function interrupt vectors will take place. When the interrupt is serviced, the related Multi-Function request flag will be automatically reset and the EMI bit will be automatically cleared to disable other interrupts.

However, it must be noted that, although the Multi-function Interrupt request flags will be automatically reset when the interrupt is serviced, the request flags from the original source of the Multi-function interrupts will not be automatically reset and must be manually reset by the application program.

Time Base Interrupts

The function of the Time Base Interrupts is to provide regular time signal in the form of an internal interrupt. They are controlled by the overflow signals from their respective timer functions. When these happen their respective interrupt request flag, TB0F or TB1F will be set. To allow the program to branch to their respective interrupt vector addresses, the global interrupt enable bit, EMI and Time Base enable bit, TB0E or TB1E, must first be set. When the interrupt is enabled, the stack is not full and the Time Base overflows, a subroutine call to their respective vector locations will take place. When the interrupt is serviced, the respective interrupt request flag, TB0F or TB1F, will be automatically reset and the EMI bit will be cleared to disable other interrupts.

The purpose of the Time Base Interrupt is to provide an interrupt signal at fixed time periods. Its clock source, f_{PSC}, originates from the internal clock source f_{SYS}, $f_{SYS}/4$ or f_{SUB} and then passes through a divider, the division ratio of which is selected by programming the appropriate bits in the TB0C and TB1C registers to obtain longer interrupt periods whose value ranges. The clock source which in turn controls the Time Base interrupt period is selected using the CLKSEL1~CLKSEL0 bits in the PSCR register.

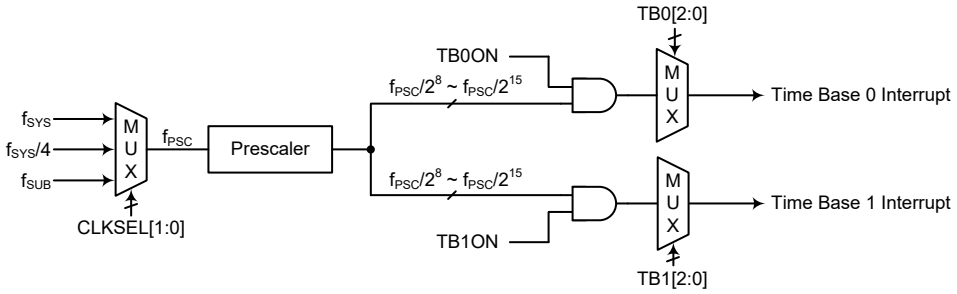

Time Base Interrupts

- **PSCR Register**

Bit	7	6	5	4	3	2	1	0
Name	—	—	—	—	—	—	CLKSEL1	CLKSEL0
R/W	—	—	—	—	—	—	R/W	R/W
POR	—	—	—	—	—	—	0	0

Bit 7~2 Unimplemented, read as "0"

Bit 1~0 **CLKSEL1~CLKSEL0**: Prescaler clock source selection
00: f_{SYS}
01: $f_{SYS}/4$
1x: f_{SUB}

- **TB0C Register**

Bit	7	6	5	4	3	2	1	0
Name	TB0ON	—	—	—	—	TB02	TB01	TB00
R/W	R/W	—	—	—	—	R/W	R/W	R/W
POR	0	—	—	—	—	0	0	0

Bit 7 **TB0ON**: Time Base 0 Control
0: Disable
1: Enable

Bit 6~3 Unimplemented, read as "0"

Bit 2~0 **TB02~TB00**: Select Time Base 0 Time-out Period
000: $2^8/f_{PSC}$
001: $2^9/f_{PSC}$
010: $2^{10}/f_{PSC}$
011: $2^{11}/f_{PSC}$
100: $2^{12}/f_{PSC}$
101: $2^{13}/f_{PSC}$
110: $2^{14}/f_{PSC}$
111: $2^{15}/f_{PSC}$

- **TB1C Register**

Bit	7	6	5	4	3	2	1	0
Name	TB1ON	—	—	—	—	TB12	TB11	TB10
R/W	R/W	—	—	—	—	R/W	R/W	R/W
POR	0	—	—	—	—	0	0	0

Bit 7 **TB1ON**: Time Base 1 Control
0: Disable
1: Enable

Bit 6~3 Unimplemented, read as "0"

Bit 2~0 **TB12~TB10**: Select Time Base 1 Time-out Period
000: $2^8/f_{PSC}$
001: $2^9/f_{PSC}$
010: $2^{10}/f_{PSC}$
011: $2^{11}/f_{PSC}$
100: $2^{12}/f_{PSC}$
101: $2^{13}/f_{PSC}$
110: $2^{14}/f_{PSC}$
111: $2^{15}/f_{PSC}$

Serial Interface Module Interrupt

The Serial Interface Module Interrupt is also known as the SIM interrupt. A SIM Interrupt request will take place when the SIM Interrupt request flag, SIMF, is set, which occurs when a byte of data has been received or transmitted by the SIM interface, an I^2C slave address match or I^2C bus time-out occurs. To allow the program to branch to its respective interrupt vector address, the global interrupt enable bit, EMI, and SIM Interrupt enable bit, SIME, must first be set. When the interrupt is enabled, the stack is not full and any of the above described situations occurs, a subroutine call to the corresponding SIM Interrupt vector, will take place. When the interrupt is serviced, the SIMF flag will be automatically cleared and the EMI bit will be automatically cleared to disable other interrupts.

SPI Interface Interrupt

An SPI Interrupt request will take place when the SPI Interrupt request flag, SPIF, is set, which occurs when a byte of data has been received or transmitted by the SPI interface. To allow the program to branch to its respective interrupt vector address, the global interrupt enable bit, EMI, and the Serial Interface Interrupt enable bit, SPIE, must first be set. When the interrupt is enabled, the stack is not full and a byte of data has been transmitted or received by the SPI interface, a subroutine call to the SPI Interrupt vector, will take place. When the interrupt is serviced, the SPIF flag will be automatically cleared and the EMI bit will be automatically cleared to disable other interrupts.

UART Interrupt

The UART Interrupt is controlled by several UART transfer conditions. When one of these conditions occurs, an interrupt pulse will be generated to get the attention of the microcontroller. These conditions are a transmitter data register empty, transmitter idle, receiver reaching FIFO trigger level, receiver overrun, address detect and an RX/TX pin wake-up. To allow the program to branch to its respective interrupt vector address, the global interrupt enable bit, EMI, and UART Interrupt enable bit, URE, must first be set. When the interrupt is enabled, the stack is not full and any of the conditions described above occurs, a subroutine call to the corresponding UART Interrupt vector, will take place. When the interrupt is serviced, the UART Interrupt flag, URF, will be automatically cleared. The EMI bit will also be automatically cleared to disable other interrupts. However, the USR register flags will only be cleared when certain actions are taken by the UART, the details of which are given in the UART section.

LVD Interrupt

The Low Voltage Detector Interrupt is contained within the Multi-function Interrupt. An LVD Interrupt request will take place when the LVD Interrupt request flag, LVF, is set, which occurs when the Low Voltage Detector function detects a low power supply voltage or a low LVDIN pin input voltage. To allow the program to branch to its respective interrupt vector address, the global interrupt enable bit, EMI, Low Voltage Interrupt enable bit, LVE, and associated Multi-function interrupt enable bit, must first be set. When the interrupt is enabled, the stack is not full and a low

voltage condition occurs, a subroutine call to the Multi-function Interrupt vector, will take place. When the Low Voltage Interrupt is serviced, the EMI bit will be automatically cleared to disable other interrupts. However, only the Multi-function interrupt request flag will be also automatically cleared. As the LVF flag will not be automatically cleared, it has to be cleared by the application program.

EEPROM Interrupt

The EEPROM Interrupt is contained within the Multi-function Interrupt. An EEPROM Interrupt request will take place when the EEPROM Interrupt request flag, DEF, is set, which occurs when an EEPROM erase or write cycle ends. To allow the program to branch to its respective interrupt vector address, the global interrupt enable bit, EMI, EEPROM Interrupt enable bit, DEE, and associated Multi-function interrupt enable bit must first be set. When the interrupt is enabled, the stack is not full and an EEPROM erase or write cycle ends, a subroutine call to the respective Multi-function Interrupt vector will take place. When the EEPROM Interrupt is serviced, the EMI bit will be automatically cleared to disable other interrupts. However, only the Multi-function interrupt request flag will be automatically cleared. As the DEF flag will not be automatically cleared, it has to be cleared by the application program.

TM Interrupts

The Standard and Periodic Type TMs each have two interrupts and come from the comparator P or A match situation, while for the BH67F5275 device the Audio Type TM has three interrupts and comes from the comparator P, A or B match situation. All of these TM interrupts are contained within the Multi-function Interrupts. For each of the Standard and Periodic Type TMs there are two interrupt request flags and two interrupt enable bits. For the Audio Type TM there are three interrupt request flages and three enable bits. A TM interrupt request will take place when any of the TM request flags are set, a situation which occurs when a TM comparator P, A or B match situation happens.

To allow the program to branch to its respective interrupt vector address, the global interrupt enable bit, EMI, respective TM Interrupt enable bit, and relevant Multi-function Interrupt enable bit, MFnE, must first be set. When the interrupt is enabled, the stack is not full and a TM comparator match situation occurs, a subroutine call to the relevant Multi-function Interrupt vector locations, will take place. When the TM interrupt is serviced, the EMI bit will be automatically cleared to disable other interrupts. However, only the related MFnF flag will be automatically cleared. As the TM interrupt request flags will not be automatically cleared, they have to be cleared by the application program.

Interrupt Wake-up Function

Each of the interrupt functions has the capability of waking up the microcontroller when in the SLEEP or IDLE Mode. A wake-up is generated when an interrupt request flag changes from low to high and is independent of whether the interrupt is enabled or not. Therefore, even though the devices are in the SLEEP or IDLE Mode and their system oscillator stopped, situations such as external edge transitions on the external interrupt pins may cause their respective interrupt flag to be set high and consequently generate an interrupt. Care must therefore be taken if spurious wake-up situations are to be avoided. If an interrupt wake-up function is to be disabled then the corresponding interrupt request flag should be set high before the devices enter the SLEEP or IDLE Mode. The interrupt enable bits have no effect on the interrupt wake-up function.

Programming Considerations

By disabling the relevant interrupt enable bits, a requested interrupt can be prevented from being serviced, however, once an interrupt request flag is set, it will remain in this condition in the interrupt register until the corresponding interrupt is serviced or until the request flag is cleared by the application program.

Where a certain interrupt is contained within a Multi-function interrupt, then when the interrupt service routine is executed, as only the Multi-function interrupt request flags, MFnF, will be automatically cleared, the individual request flag for the function needs to be cleared by the application program.

It is recommended that programs do not use the "CALL" instruction within the interrupt service subroutine. Interrupts often occur in an unpredictable manner or need to be serviced immediately. If only one stack is left and the interrupt is not well controlled, the original control sequence will be damaged once a CALL subroutine is executed in the interrupt subroutine.

Every interrupt has the capability of waking up the microcontroller when it is in the SLEEP or IDLE Mode, the wake up being generated when the interrupt request flag changes from low to high. If it is required to prevent a certain interrupt from waking up the microcontroller then its respective request flag should be first set high before enter SLEEP or IDLE Mode.

As only the Program Counter is pushed onto the stack, then when the interrupt is serviced, if the contents of the accumulator, status register or other registers are altered by the interrupt service program, their contents should be saved to the memory at the beginning of the interrupt service routine.

To return from an interrupt subroutine, either a RET or RETI instruction may be executed. The RETI instruction in addition to executing a return to the main program also automatically sets the EMI bit high to allow further interrupts. The RET instruction however only executes a return to the main program leaving the EMI bit in its present zero state and therefore disabling the execution of further interrupts.

Configuration Options

Configuration options refer to certain options within the MCU that are programmed into the devices during the programming process. During the development process, these options are selected using the HT-IDE software development tools. All options must be defined for proper system function, the details of which are shown in the table.

No.	Options
Oscillator Option	
1	HIRC Frequency Selection – f_{HIRC}: 4MHz, 8MHz or 12MHz

Note: When the HIRC has been configured at a frequency shown in this table, the HIRC1 and HIRC0 bits should also be setup to select the same frequency to achieve the HIRC frequency accuracy specified in the A.C. Characteristics.

Application Circuits

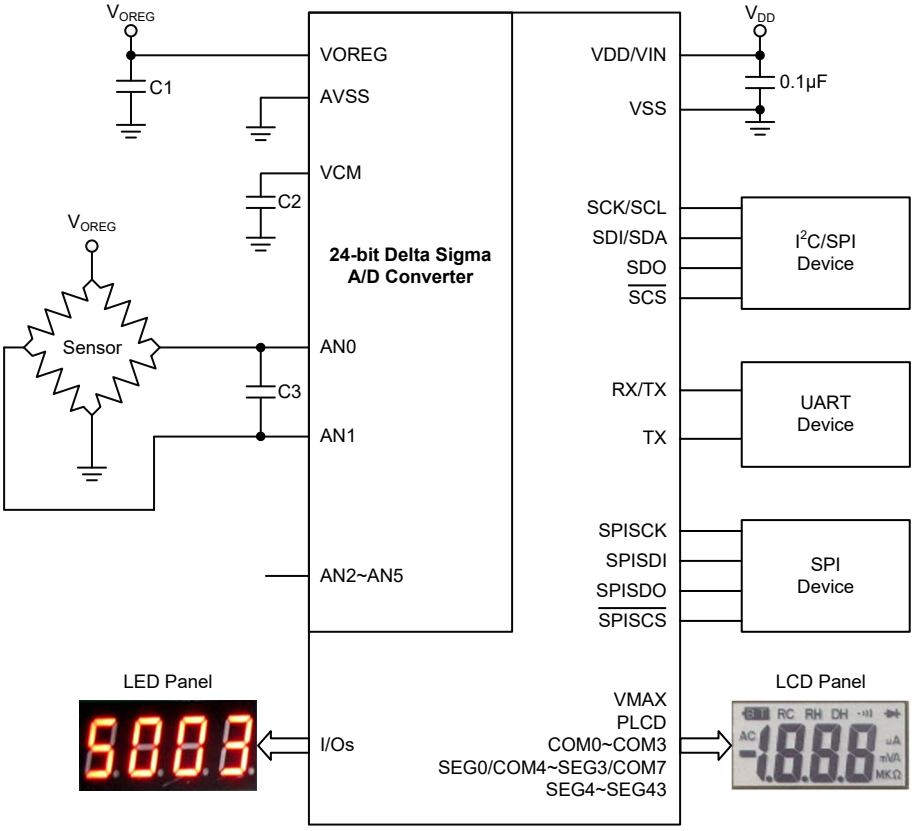

Instruction Set

Introduction

Central to the successful operation of any microcontroller is its instruction set, which is a set of program instruction codes that directs the microcontroller to perform certain operations. In the case of Holtek microcontroller, a comprehensive and flexible set of over 60 instructions is provided to enable programmers to implement their application with the minimum of programming overheads.

For easier understanding of the various instruction codes, they have been subdivided into several functional groupings.

Instruction Timing

Most instructions are implemented within one instruction cycle. The exceptions to this are branch, call, or table read instructions where two instruction cycles are required. One instruction cycle is equal to 4 system clock cycles, therefore in the case of an 8MHz system oscillator, most instructions would be implemented within 0.5μs and branch or call instructions would be implemented within 1μs. Although instructions which require one more cycle to implement are generally limited to the JMP, CALL, RET, RETI and table read instructions, it is important to realize that any other instructions which involve manipulation of the Program Counter Low register or PCL will also take one more cycle to implement. As instructions which change the contents of the PCL will imply a direct jump to that new address, one more cycle will be required. Examples of such instructions would be “CLR PCL” or “MOV PCL, A”. For the case of skip instructions, it must be noted that if the result of the comparison involves a skip operation then this will also take one more cycle, if no skip is involved then only one cycle is required.

Moving and Transferring Data

The transfer of data within the microcontroller program is one of the most frequently used operations. Making use of several kinds of MOV instructions, data can be transferred from registers to the Accumulator and vice-versa as well as being able to move specific immediate data directly into the Accumulator. One of the most important data transfer applications is to receive data from the input ports and transfer data to the output ports.

Arithmetic Operations

The ability to perform certain arithmetic operations and data manipulation is a necessary feature of most microcontroller applications. Within the Holtek microcontroller instruction set are a range of add and subtract instruction mnemonics to enable the necessary arithmetic to be carried out. Care must be taken to ensure correct handling of carry and borrow data when results exceed 255 for addition and less than 0 for subtraction. The increment and decrement instructions such as INC, INCA, DEC and DECA provide a simple means of increasing or decreasing by a value of one of the values in the destination specified.

Logical and Rotate Operation

The standard logical operations such as AND, OR, XOR and CPL all have their own instruction within the Holtek microcontroller instruction set. As with the case of most instructions involving data manipulation, data must pass through the Accumulator which may involve additional programming steps. In all logical data operations, the zero flag may be set if the result of the operation is zero. Another form of logical data manipulation comes from the rotate instructions such as RR, RL, RRC and RLC which provide a simple means of rotating one bit right or left. Different rotate instructions exist depending on program requirements. Rotate instructions are useful for serial port programming applications where data can be rotated from an internal register into the Carry bit from where it can be examined and the necessary serial bit set high or low. Another application which rotate data operations are used is to implement multiplication and division calculations.

Branches and Control Transfer

Program branching takes the form of either jumps to specified locations using the JMP instruction or to a subroutine using the CALL instruction. They differ in the sense that in the case of a subroutine call, the program must return to the instruction immediately when the subroutine has been carried out. This is done by placing a return instruction “RET” in the subroutine which will cause the program to jump back to the address right after the CALL instruction. In the case of a JMP instruction, the program simply jumps to the desired location. There is no requirement to jump back to the original jumping off point as in the case of the CALL instruction. One special and extremely useful set of branch instructions are the conditional branches. Here a decision is first made regarding the condition of a certain data memory or individual bits. Depending upon the conditions, the program will continue with the next instruction or skip over it and jump to the following instruction. These instructions are the key to decision making and branching within the program perhaps determined by the condition of certain input switches or by the condition of internal data bits.

Bit Operations

The ability to provide single bit operations on Data Memory is an extremely flexible feature of all Holtek microcontrollers. This feature is especially useful for output port bit programming where individual bits or port pins can be directly set high or low using either the “SET [m].i” or “CLR [m].i” instructions respectively. The feature removes the need for programmers to first read the 8-bit output port, manipulate the input data to ensure that other bits are not changed and then output the port with the correct new data. This read-modify-write process is taken care of automatically when these bit operation instructions are used.

Table Read Operations

Data storage is normally implemented by using registers. However, when working with large amounts of fixed data, the volume involved often makes it inconvenient to store the fixed data in the Data Memory. To overcome this problem, Holtek microcontrollers allow an area of Program Memory to be setup as a table where data can be directly stored. A set of easy to use instructions provides the means by which this fixed data can be referenced and retrieved from the Program Memory.

Other Operations

In addition to the above functional instructions, a range of other instructions also exist such as the “HALT” instruction for Power-down operations and instructions to control the operation of the Watchdog Timer for reliable program operations under extreme electric or electromagnetic environments. For their relevant operations, refer to the functional related sections.

Instruction Set Summary

The instructions related to the data memory access in the following table can be used when the desired data memory is located in Data Memory sector 0.

Table Conventions

x: Bits immediate data
m: Data Memory address
A: Accumulator
i: 0~7 number of bits
addr: Program memory address

Mnemonic	Description	Cycles	Flag Affected
Arithmetic			
ADD A,[m]	Add Data Memory to ACC	1	Z, C, AC, OV, SC
ADDM A,[m]	Add ACC to Data Memory	1[Note]	Z, C, AC, OV, SC
ADD A,x	Add immediate data to ACC	1	Z, C, AC, OV, SC
ADC A,[m]	Add Data Memory to ACC with Carry	1	Z, C, AC, OV, SC
ADCM A,[m]	Add ACC to Data memory with Carry	1[Note]	Z, C, AC, OV, SC
SUB A,x	Subtract immediate data from the ACC	1	Z, C, AC, OV, SC, CZ
SUB A,[m]	Subtract Data Memory from ACC	1	Z, C, AC, OV, SC, CZ
SUBM A,[m]	Subtract Data Memory from ACC with result in Data Memory	1[Note]	Z, C, AC, OV, SC, CZ
SBC A,x	Subtract immediate data from ACC with Carry	1	Z, C, AC, OV, SC, CZ
SBC A,[m]	Subtract Data Memory from ACC with Carry	1	Z, C, AC, OV, SC, CZ
SBCM A,[m]	Subtract Data Memory from ACC with Carry, result in Data Memory	1[Note]	Z, C, AC, OV, SC, CZ
DAA [m]	Decimal adjust ACC for Addition with result in Data Memory	1[Note]	C
Logic Operation			
AND A,[m]	Logical AND Data Memory to ACC	1	Z
OR A,[m]	Logical OR Data Memory to ACC	1	Z
XOR A,[m]	Logical XOR Data Memory to ACC	1	Z
ANDM A,[m]	Logical AND ACC to Data Memory	1[Note]	Z
ORM A,[m]	Logical OR ACC to Data Memory	1[Note]	Z
XORM A,[m]	Logical XOR ACC to Data Memory	1[Note]	Z
AND A,x	Logical AND immediate Data to ACC	1	Z
OR A,x	Logical OR immediate Data to ACC	1	Z
XOR A,x	Logical XOR immediate Data to ACC	1	Z
CPL [m]	Complement Data Memory	1[Note]	Z
CPLA [m]	Complement Data Memory with result in ACC	1	Z
Increment & Decrement			
INCA [m]	Increment Data Memory with result in ACC	1	Z
INC [m]	Increment Data Memory	1[Note]	Z
DECA [m]	Decrement Data Memory with result in ACC	1	Z
DEC [m]	Decrement Data Memory	1[Note]	Z
Rotate			
RRA [m]	Rotate Data Memory right with result in ACC	1	None
RR [m]	Rotate Data Memory right	1[Note]	None
RRCA [m]	Rotate Data Memory right through Carry with result in ACC	1	C
RRC [m]	Rotate Data Memory right through Carry	1[Note]	C
RLA [m]	Rotate Data Memory left with result in ACC	1	None
RL [m]	Rotate Data Memory left	1[Note]	None
RLCA [m]	Rotate Data Memory left through Carry with result in ACC	1	C
RLC [m]	Rotate Data Memory left through Carry	1[Note]	C

Mnemonic	Description	Cycles	Flag Affected
Data Move			
MOV A,[m]	Move Data Memory to ACC	1	None
MOV [m],A	Move ACC to Data Memory	1[Note]	None
MOV A,x	Move immediate data to ACC	1	None
Bit Operation			
CLR [m].i	Clear bit of Data Memory	1[Note]	None
SET [m].i	Set bit of Data Memory	1[Note]	None
Branch Operation			
JMP addr	Jump unconditionally	2	None
SZ [m]	Skip if Data Memory is zero	1[Note]	None
SZA [m]	Skip if Data Memory is zero with data movement to ACC	1[Note]	None
SZ [m].i	Skip if bit i of Data Memory is zero	1[Note]	None
SNZ [m]	Skip if Data Memory is not zero	1[Note]	None
SNZ [m].i	Skip if bit i of Data Memory is not zero	1[Note]	None
SIZ [m]	Skip if increment Data Memory is zero	1[Note]	None
SDZ [m]	Skip if decrement Data Memory is zero	1[Note]	None
SIZA [m]	Skip if increment Data Memory is zero with result in ACC	1[Note]	None
SDZA [m]	Skip if decrement Data Memory is zero with result in ACC	1[Note]	None
CALL addr	Subroutine call	2	None
RET	Return from subroutine	2	None
RET A,x	Return from subroutine and load immediate data to ACC	2	None
RETI	Return from interrupt	2	None
Table Read Operation			
TABRD [m]	Read table (specific page) to TBLH and Data Memory	2[Note]	None
TABRDL [m]	Read table (last page) to TBLH and Data Memory	2[Note]	None
ITABRD [m]	Increment table pointer TBLP first and Read table (specific page) to TBLH and Data Memory	2[Note]	None
ITABRDL [m]	Increment table pointer TBLP first and Read table (last page) to TBLH and Data Memory	2[Note]	None
Miscellaneous			
NOP	No operation	1	None
CLR [m]	Clear Data Memory	1[Note]	None
SET [m]	Set Data Memory	1[Note]	None
CLR WDT	Clear Watchdog Timer	1	TO, PDF
SWAP [m]	Swap nibbles of Data Memory	1[Note]	None
SWAPA [m]	Swap nibbles of Data Memory with result in ACC	1	None
HALT	Enter power down mode	1	TO, PDF

Note: 1. For skip instructions, if the result of the comparison involves a skip then two cycles are required, if no skip takes place only one cycle is required.
2. Any instruction which changes the contents of the PCL will also require 2 cycles for execution.

Extended Instruction Set

The extended instructions are used to support the full range address access for the data memory. When the accessed data memory is located in any data memory sector except sector 0, the extended instruction can be used to directly access the data memory instead of using the indirect addressing access. This can not only reduce the use of Flash memory space but also improve the CPU execution efficiency.

Mnemonic	Description	Cycles	Flag Affected
Arithmetic			
LADD A,[m]	Add Data Memory to ACC	2	Z, C, AC, OV, SC
LADDM A,[m]	Add ACC to Data Memory	2[Note]	Z, C, AC, OV, SC
LADC A,[m]	Add Data Memory to ACC with Carry	2	Z, C, AC, OV, SC
LADCM A,[m]	Add ACC to Data memory with Carry	2[Note]	Z, C, AC, OV, SC
LSUB A,[m]	Subtract Data Memory from ACC	2	Z, C, AC, OV, SC, CZ
LSUBM A,[m]	Subtract Data Memory from ACC with result in Data Memory	2[Note]	Z, C, AC, OV, SC, CZ
LSBC A,[m]	Subtract Data Memory from ACC with Carry	2	Z, C, AC, OV, SC, CZ
LSBCM A,[m]	Subtract Data Memory from ACC with Carry, result in Data Memory	2[Note]	Z, C, AC, OV, SC, CZ
LDAA [m]	Decimal adjust ACC for Addition with result in Data Memory	2[Note]	C
Logic Operation			
LAND A,[m]	Logical AND Data Memory to ACC	2	Z
LOR A,[m]	Logical OR Data Memory to ACC	2	Z
LXOR A,[m]	Logical XOR Data Memory to ACC	2	Z
LANDM A,[m]	Logical AND ACC to Data Memory	2[Note]	Z
LORM A,[m]	Logical OR ACC to Data Memory	2[Note]	Z
LXORM A,[m]	Logical XOR ACC to Data Memory	2[Note]	Z
LCPL [m]	Complement Data Memory	2[Note]	Z
LCPLA [m]	Complement Data Memory with result in ACC	2	Z
Increment & Decrement			
LINCA [m]	Increment Data Memory with result in ACC	2	Z
LINC [m]	Increment Data Memory	2[Note]	Z
LDECA [m]	Decrement Data Memory with result in ACC	2	Z
LDEC [m]	Decrement Data Memory	2[Note]	Z
Rotate			
LRRA [m]	Rotate Data Memory right with result in ACC	2	None
LRR [m]	Rotate Data Memory right	2[Note]	None
LRRCA [m]	Rotate Data Memory right through Carry with result in ACC	2	C
LRRC [m]	Rotate Data Memory right through Carry	2[Note]	C
LRLA [m]	Rotate Data Memory left with result in ACC	2	None
LRL [m]	Rotate Data Memory left	2[Note]	None
LRLCA [m]	Rotate Data Memory left through Carry with result in ACC	2	C
LRLC [m]	Rotate Data Memory left through Carry	2[Note]	C
Data Move			
LMOV A,[m]	Move Data Memory to ACC	2	None
LMOV [m],A	Move ACC to Data Memory	2[Note]	None
Bit Operation			
LCLR [m].i	Clear bit of Data Memory	2[Note]	None
LSET [m].i	Set bit of Data Memory	2[Note]	None

Mnemonic	Description	Cycles	Flag Affected
Branch			
LSZ [m]	Skip if Data Memory is zero	2[Note]	None
LSZA [m]	Skip if Data Memory is zero with data movement to ACC	2[Note]	None
LSNZ [m]	Skip if Data Memory is not zero	2[Note]	None
LSZ [m].i	Skip if bit i of Data Memory is zero	2[Note]	None
LSNZ [m].i	Skip if bit i of Data Memory is not zero	2[Note]	None
LSIZ [m]	Skip if increment Data Memory is zero	2[Note]	None
LSDZ [m]	Skip if decrement Data Memory is zero	2[Note]	None
LSIZA [m]	Skip if increment Data Memory is zero with result in ACC	2[Note]	None
LSDZA [m]	Skip if decrement Data Memory is zero with result in ACC	2[Note]	None
Table Read			
LTABRD [m]	Read table (specific page) to TBLH and Data Memory	3[Note]	None
LTABRDL [m]	Read table (last page) to TBLH and Data Memory	3[Note]	None
LITABRD [m]	Increment table pointer TBLP first and Read table (specific page) to TBLH and Data Memory	3[Note]	None
LITABRDL [m]	Increment table pointer TBLP first and Read table (last page) to TBLH and Data Memory	3[Note]	None
Miscellaneous			
LCLR [m]	Clear Data Memory	2[Note]	None
LSET [m]	Set Data Memory	2[Note]	None
LSWAP [m]	Swap nibbles of Data Memory	2[Note]	None
LSWAPA [m]	Swap nibbles of Data Memory with result in ACC	2	None

Note: 1. For these extended skip instructions, if the result of the comparison involves a skip then three cycles are required, if no skip takes place two cycles is required.

2. Any extended instruction which changes the contents of the PCL register will also require three cycles for execution.

Instruction Definition

ADC A,[m] Add Data Memory to ACC with Carry

Description: The contents of the specified Data Memory, Accumulator and the carry flag are added. The result is stored in the Accumulator.

Operation: ACC ← ACC + [m] + C

Affected flag(s): OV, Z, AC, C, SC

ADCM A,[m] Add ACC to Data Memory with Carry

Description: The contents of the specified Data Memory, Accumulator and the carry flag are added. The result is stored in the specified Data Memory.

Operation: [m] ← ACC + [m] + C

Affected flag(s): OV, Z, AC, C, SC

ADD A,[m] Add Data Memory to ACC

Description: The contents of the specified Data Memory and the Accumulator are added. The result is stored in the Accumulator.

Operation: ACC ← ACC + [m]

Affected flag(s): OV, Z, AC, C, SC

ADD A,x Add immediate data to ACC

Description: The contents of the Accumulator and the specified immediate data are added. The result is stored in the Accumulator.

Operation: ACC ← ACC + x

Affected flag(s): OV, Z, AC, C, SC

ADDM A,[m] Add ACC to Data Memory

Description: The contents of the specified Data Memory and the Accumulator are added. The result is stored in the specified Data Memory.

Operation: [m] ← ACC + [m]

Affected flag(s): OV, Z, AC, C, SC

AND A,[m] Logical AND Data Memory to ACC

Description: Data in the Accumulator and the specified Data Memory perform a bitwise logical AND operation. The result is stored in the Accumulator.

Operation: ACC ← ACC ″AND″ [m]

Affected flag(s): Z

AND A,x Logical AND immediate data to ACC

Description: Data in the Accumulator and the specified immediate data perform a bit wise logical AND operation. The result is stored in the Accumulator.

Operation: ACC ← ACC ″AND″ x

Affected flag(s): Z

ANDM A,[m] Logical AND ACC to Data Memory

Description: Data in the specified Data Memory and the Accumulator perform a bitwise logical AND operation. The result is stored in the Data Memory.

Operation: [m] ← ACC ″AND″ [m]

Affected flag(s): Z

CALL addr Subroutine call

Description: Unconditionally calls a subroutine at the specified address. The Program Counter then increments by 1 to obtain the address of the next instruction which is then pushed onto the stack. The specified address is then loaded and the program continues execution from this new address. As this instruction requires an additional operation, it is a two cycle instruction.

Operation: Stack ← Program Counter + 1
Program Counter ← addr

Affected flag(s): None

CLR [m] Clear Data Memory

Description: Each bit of the specified Data Memory is cleared to 0.

Operation: [m] ← 00H

Affected flag(s): None

CLR [m].i Clear bit of Data Memory

Description: Bit i of the specified Data Memory is cleared to 0.

Operation: [m].i ← 0

Affected flag(s): None

CLR WDT Clear Watchdog Timer

Description: The TO, PDF flags and the WDT are all cleared.

Operation: WDT cleared
TO ← 0
PDF ← 0

Affected flag(s): TO, PDF

CPL [m] Complement Data Memory

Description: Each bit of the specified Data Memory is logically complemented (1′s complement). Bits which previously contained a 1 are changed to 0 and vice versa.

Operation: [m] ← $\overline{[m]}$

Affected flag(s): Z

CPLA [m] Complement Data Memory with result in ACC

Description: Each bit of the specified Data Memory is logically complemented (1′s complement). Bits which previously contained a 1 are changed to 0 and vice versa. The complemented result is stored in the Accumulator and the contents of the Data Memory remain unchanged.

Operation: ACC ← $\overline{[m]}$

Affected flag(s): Z

DAA [m] Decimal-Adjust ACC for addition with result in Data Memory

Description: Convert the contents of the Accumulator value to a BCD (Binary Coded Decimal) value resulting from the previous addition of two BCD variables. If the low nibble is greater than 9 or if AC flag is set, then a value of 6 will be added to the low nibble. Otherwise the low nibble remains unchanged. If the high nibble is greater than 9 or if the C flag is set, then a value of 6 will be added to the high nibble. Essentially, the decimal conversion is performed by adding 00H, 06H, 60H or 66H depending on the Accumulator and flag conditions. Only the C flag may be affected by this instruction which indicates that if the original BCD sum is greater than 100, it allows multiple precision decimal addition.

Operation: [m] ← ACC + 00H or
[m] ← ACC + 06H or
[m] ← ACC + 60H or
[m] ← ACC + 66H

Affected flag(s): C

DEC [m]	Decrement Data Memory
Description	Data in the specified Data Memory is decremented by 1.
Operation	[m] ← [m] − 1
Affected flag(s)	Z

DECA [m]	Decrement Data Memory with result in ACC
Description	Data in the specified Data Memory is decremented by 1. The result is stored in the Accumulator. The contents of the Data Memory remain unchanged.
Operation	ACC ← [m] − 1
Affected flag(s)	Z

HALT	Enter power down mode
Description	This instruction stops the program execution and turns off the system clock. The contents of the Data Memory and registers are retained. The WDT and prescaler are cleared. The power down flag PDF is set and the WDT time-out flag TO is cleared.
Operation	TO ← 0 PDF ← 1
Affected flag(s)	TO, PDF

INC [m]	Increment Data Memory
Description	Data in the specified Data Memory is incremented by 1.
Operation	[m] ← [m] + 1
Affected flag(s)	Z

INCA [m]	Increment Data Memory with result in ACC
Description	Data in the specified Data Memory is incremented by 1. The result is stored in the Accumulator. The contents of the Data Memory remain unchanged.
Operation	ACC ← [m] + 1
Affected flag(s)	Z

JMP addr	Jump unconditionally
Description	The contents of the Program Counter are replaced with the specified address. Program execution then continues from this new address. As this requires the insertion of a dummy instruction while the new address is loaded, it is a two cycle instruction.
Operation	Program Counter ← addr
Affected flag(s)	None

MOV A,[m]	Move Data Memory to ACC
Description	The contents of the specified Data Memory are copied to the Accumulator.
Operation	ACC ← [m]
Affected flag(s)	None

MOV A,x	Move immediate data to ACC
Description	The immediate data specified is loaded into the Accumulator.
Operation	ACC ← x
Affected flag(s)	None

MOV [m],A	Move ACC to Data Memory
Description	The contents of the Accumulator are copied to the specified Data Memory.
Operation	[m] ← ACC
Affected flag(s)	None

NOP	No operation
Description	No operation is performed. Execution continues with the next instruction.
Operation	No operation
Affected flag(s)	None

OR A,[m]	Logical OR Data Memory to ACC
Description	Data in the Accumulator and the specified Data Memory perform a bitwise logical OR operation. The result is stored in the Accumulator.
Operation	ACC ← ACC ″OR″ [m]
Affected flag(s)	Z

OR A,x	Logical OR immediate data to ACC
Description	Data in the Accumulator and the specified immediate data perform a bitwise logical OR operation. The result is stored in the Accumulator.
Operation	ACC ← ACC ″OR″ x
Affected flag(s)	Z

ORM A,[m]	Logical OR ACC to Data Memory
Description	Data in the specified Data Memory and the Accumulator perform a bitwise logical OR operation. The result is stored in the Data Memory.
Operation	[m] ← ACC ″OR″ [m]
Affected flag(s)	Z

RET	Return from subroutine
Description	The Program Counter is restored from the stack. Program execution continues at the restored address.
Operation	Program Counter ← Stack
Affected flag(s)	None

RET A,x	Return from subroutine and load immediate data to ACC
Description	The Program Counter is restored from the stack and the Accumulator loaded with the specified immediate data. Program execution continues at the restored address.
Operation	Program Counter ← Stack ACC ← x
Affected flag(s)	None

RETI	Return from interrupt
Description	The Program Counter is restored from the stack and the interrupts are re-enabled by setting the EMI bit. EMI is the master interrupt global enable bit. If an interrupt was pending when the RETI instruction is executed, the pending Interrupt routine will be processed before returning to the main program.
Operation	Program Counter ← Stack EMI ← 1
Affected flag(s)	None

RL [m]	Rotate Data Memory left
Description	The contents of the specified Data Memory are rotated left by 1 bit with bit 7 rotated into bit 0.
Operation	[m].(i+1) ← [m].i; (i=0~6) [m].0 ← [m].7
Affected flag(s)	None

RLA [m] Rotate Data Memory left with result in ACC

Description: The contents of the specified Data Memory are rotated left by 1 bit with bit 7 rotated into bit 0. The rotated result is stored in the Accumulator and the contents of the Data Memory remain unchanged.

Operation:
ACC.(i+1) ← [m].i; (i=0~6)
ACC.0 ← [m].7

Affected flag(s): None

RLC [m] Rotate Data Memory left through Carry

Description: The contents of the specified Data Memory and the carry flag are rotated left by 1 bit. Bit 7 replaces the Carry bit and the original carry flag is rotated into bit 0.

Operation:
[m].(i+1) ← [m].i; (i=0~6)
[m].0 ← C
C ← [m].7

Affected flag(s): C

RLCA [m] Rotate Data Memory left through Carry with result in ACC

Description: Data in the specified Data Memory and the carry flag are rotated left by 1 bit. Bit 7 replaces the Carry bit and the original carry flag is rotated into the bit 0. The rotated result is stored in the Accumulator and the contents of the Data Memory remain unchanged.

Operation:
ACC.(i+1) ← [m].i; (i=0~6)
ACC.0 ← C
C ← [m].7

Affected flag(s): C

RR [m] Rotate Data Memory right

Description: The contents of the specified Data Memory are rotated right by 1 bit with bit 0 rotated into bit 7.

Operation:
[m].i ← [m].(i+1); (i=0~6)
[m].7 ← [m].0

Affected flag(s): None

RRA [m] Rotate Data Memory right with result in ACC

Description: Data in the specified Data Memory is rotated right by 1 bit with bit 0 rotated into bit 7. The rotated result is stored in the Accumulator and the contents of the Data Memory remain unchanged.

Operation:
ACC.i ← [m].(i+1); (i=0~6)
ACC.7 ← [m].0

Affected flag(s): None

RRC [m] Rotate Data Memory right through Carry

Description: The contents of the specified Data Memory and the carry flag are rotated right by 1 bit. Bit 0 replaces the Carry bit and the original carry flag is rotated into bit 7.

Operation:
[m].i ← [m].(i+1); (i=0~6)
[m].7 ← C
C ← [m].0

Affected flag(s): C

RRCA [m] Rotate Data Memory right through Carry with result in ACC

Description: Data in the specified Data Memory and the carry flag are rotated right by 1 bit. Bit 0 replaces the Carry bit and the original carry flag is rotated into bit 7. The rotated result is stored in the Accumulator and the contents of the Data Memory remain unchanged.

Operation:
ACC.i ← [m].(i+1); (i=0~6)
ACC.7 ← C
C ← [m].0

Affected flag(s): C

SBC A,[m] Subtract Data Memory from ACC with Carry

Description: The contents of the specified Data Memory and the complement of the carry flag are subtracted from the Accumulator. The result is stored in the Accumulator. Note that if the result of subtraction is negative, the C flag will be cleared to 0, otherwise if the result is positive or zero, the C flag will be set to 1.

Operation: ACC ← ACC − [m] − $\overline{C}$

Affected flag(s): OV, Z, AC, C, SC, CZ

SBC A, x Subtract immediate data from ACC with Carry

Description: The immediate data and the complement of the carry flag are subtracted from the Accumulator. The result is stored in the Accumulator. Note that if the result of subtraction is negative, the C flag will be cleared to 0, otherwise if the result is positive or zero, the C flag will be set to 1.

Operation: ACC ← ACC – [m] – $\overline{C}$

Affected flag(s): OV, Z, AC, C, SC, CZ

SBCM A,[m] Subtract Data Memory from ACC with Carry and result in Data Memory

Description: The contents of the specified Data Memory and the complement of the carry flag are subtracted from the Accumulator. The result is stored in the Data Memory. Note that if the result of subtraction is negative, the C flag will be cleared to 0, otherwise if the result is positive or zero, the C flag will be set to 1.

Operation: [m] ← ACC − [m] − $\overline{C}$

Affected flag(s): OV, Z, AC, C, SC, CZ

SDZ [m] Skip if decrement Data Memory is 0

Description: The contents of the specified Data Memory are first decremented by 1. If the result is 0 the following instruction is skipped. As this requires the insertion of a dummy instruction while the next instruction is fetched, it is a two cycle instruction. If the result is not 0 the program proceeds with the following instruction.

Operation:
[m] ← [m] − 1
Skip if [m]=0

Affected flag(s): None

SDZA [m] Skip if decrement Data Memory is zero with result in ACC

Description: The contents of the specified Data Memory are first decremented by 1. If the result is 0, the following instruction is skipped. The result is stored in the Accumulator but the specified Data Memory contents remain unchanged. As this requires the insertion of a dummy instruction while the next instruction is fetched, it is a two cycle instruction. If the result is not 0, the program proceeds with the following instruction.

Operation:
ACC ← [m] − 1
Skip if ACC=0

Affected flag(s): None

SET [m]	Set Data Memory
Description	Each bit of the specified Data Memory is set to 1.
Operation	[m] ← FFH
Affected flag(s)	None

SET [m].i	Set bit of Data Memory
Description	Bit i of the specified Data Memory is set to 1.
Operation	[m].i ← 1
Affected flag(s)	None

SIZ [m]	Skip if increment Data Memory is 0
Description	The contents of the specified Data Memory are first incremented by 1. If the result is 0, the following instruction is skipped. As this requires the insertion of a dummy instruction while the next instruction is fetched, it is a two cycle instruction. If the result is not 0 the program proceeds with the following instruction.
Operation	[m] ← [m] + 1 Skip if [m]=0
Affected flag(s)	None

SIZA [m]	Skip if increment Data Memory is zero with result in ACC
Description	The contents of the specified Data Memory are first incremented by 1. If the result is 0, the following instruction is skipped. The result is stored in the Accumulator but the specified Data Memory contents remain unchanged. As this requires the insertion of a dummy instruction while the next instruction is fetched, it is a two cycle instruction. If the result is not 0 the program proceeds with the following instruction.
Operation	ACC ← [m] + 1 Skip if ACC=0
Affected flag(s)	None

SNZ [m].i	Skip if bit i of Data Memory is not 0
Description	If bit i of the specified Data Memory is not 0, the following instruction is skipped. As this requires the insertion of a dummy instruction while the next instruction is fetched, it is a two cycle instruction. If the result is 0 the program proceeds with the following instruction.
Operation	Skip if [m].i ≠ 0
Affected flag(s)	None

SNZ [m]	Skip if Data Memory is not 0
Description	The contents of the specified Data Memory are read out and then written back to the specified Data Memory again. If the specified Data Memory is not 0, the following instruction is skipped. As this requires the insertion of a dummy instruction while the next instruction is fetched, it is a two cycle instruction. If the result is 0 the program proceeds with the following instruction.
Operation	Skip if [m]≠ 0
Affected flag(s)	None

SUB A,[m]	Subtract Data Memory from ACC
Description	The specified Data Memory is subtracted from the contents of the Accumulator. The result is stored in the Accumulator. Note that if the result of subtraction is negative, the C flag will be cleared to 0, otherwise if the result is positive or zero, the C flag will be set to 1.
Operation	ACC ← ACC − [m]
Affected flag(s)	OV, Z, AC, C, SC, CZ

SUBM A,[m] Subtract Data Memory from ACC with result in Data Memory

Description: The specified Data Memory is subtracted from the contents of the Accumulator. The result is stored in the Data Memory. Note that if the result of subtraction is negative, the C flag will be cleared to 0, otherwise if the result is positive or zero, the C flag will be set to 1.

Operation: [m] ← ACC − [m]

Affected flag(s): OV, Z, AC, C, SC, CZ

SUB A,x Subtract immediate data from ACC

Description: The immediate data specified by the code is subtracted from the contents of the Accumulator. The result is stored in the Accumulator. Note that if the result of subtraction is negative, the C flag will be cleared to 0, otherwise if the result is positive or zero, the C flag will be set to 1.

Operation: ACC ← ACC − x

Affected flag(s): OV, Z, AC, C, SC, CZ

SWAP [m] Swap nibbles of Data Memory

Description: The low-order and high-order nibbles of the specified Data Memory are interchanged.

Operation: [m].3~[m].0 ↔ [m].7~[m].4

Affected flag(s): None

SWAPA [m] Swap nibbles of Data Memory with result in ACC

Description: The low-order and high-order nibbles of the specified Data Memory are interchanged. The result is stored in the Accumulator. The contents of the Data Memory remain unchanged.

Operation: ACC.3~ACC.0 ← [m].7~[m].4
ACC.7~ACC.4 ← [m].3~[m].0

Affected flag(s): None

SZ [m] Skip if Data Memory is 0

Description: The contents of the specified Data Memory are read out and then written back to the specified Data Memory again. If the contents of the specified Data Memory is 0, the following instruction is skipped. As this requires the insertion of a dummy instruction while the next instruction is fetched, it is a two cycle instruction. If the result is not 0 the program proceeds with the following instruction.

Operation: Skip if [m]=0

Affected flag(s): None

SZA [m] Skip if Data Memory is 0 with data movement to ACC

Description: The contents of the specified Data Memory are copied to the Accumulator. If the value is zero, the following instruction is skipped. As this requires the insertion of a dummy instruction while the next instruction is fetched, it is a two cycle instruction. If the result is not 0 the program proceeds with the following instruction.

Operation: ACC ← [m]
Skip if [m]=0

Affected flag(s): None

SZ [m].i Skip if bit i of Data Memory is 0

Description: If bit i of the specified Data Memory is 0, the following instruction is skipped. As this requires the insertion of a dummy instruction while the next instruction is fetched, it is a two cycle instruction. If the result is not 0, the program proceeds with the following instruction.

Operation: Skip if [m].i=0

Affected flag(s): None

TABRD [m]	Read table (specific page) to TBLH and Data Memory
Description	The low byte of the program code (specific page) addressed by the table pointer (TBLP and TBHP) is moved to the specified Data Memory and the high byte moved to TBLH.
Operation	[m] ← program code (low byte) TBLH ← program code (high byte)
Affected flag(s)	None

TABRDL [m]	Read table (last page) to TBLH and Data Memory
Description	The low byte of the program code (last page) addressed by the table pointer (TBLP) is moved to the specified Data Memory and the high byte moved to TBLH.
Operation	[m] ← program code (low byte) TBLH ← program code (high byte)
Affected flag(s)	None

ITABRD [m]	Increment table pointer low byte first and read table (specific page) to TBLH and Data Memory
Description	Increment table pointer low byte, TBLP, first and then the program code (specific page) addressed by the table pointer (TBHP and TBLP) is moved to the specified Data Memory and the high byte moved to TBLH.
Operation	[m] ← program code (low byte) TBLH ← program code (high byte)
Affected flag(s)	None

ITABRDL [m]	Increment table pointer low byte first and read table (last page) to TBLH and Data Memory
Description	Increment table pointer low byte, TBLP, first and then the low byte of the program code (last page) addressed by the table pointer (TBLP) is moved to the specified Data Memory and the high byte moved to TBLH.
Operation	[m] ← program code (low byte) TBLH ← program code (high byte)
Affected flag(s)	None

XOR A,[m]	Logical XOR Data Memory to ACC
Description	Data in the Accumulator and the specified Data Memory perform a bitwise logical XOR operation. The result is stored in the Accumulator.
Operation	ACC ← ACC ″XOR″ [m]
Affected flag(s)	Z

XORM A,[m]	Logical XOR ACC to Data Memory
Description	Data in the specified Data Memory and the Accumulator perform a bitwise logical XOR operation. The result is stored in the Data Memory.
Operation	[m] ← ACC ″XOR″ [m]
Affected flag(s)	Z

XOR A,x	Logical XOR immediate data to ACC
Description	Data in the Accumulator and the specified immediate data perform a bitwise logical XOR operation. The result is stored in the Accumulator.
Operation	ACC ← ACC ″XOR″ x
Affected flag(s)	Z

Extended Instruction Definition

The extended instructions are used to directly access the data stored in any data memory sections.

LADC A,[m] Add Data Memory to ACC with Carry

Description: The contents of the specified Data Memory, Accumulator and the carry flag are added. The result is stored in the Accumulator.

Operation: ACC ← ACC + [m] + C

Affected flag(s): OV, Z, AC, C, SC

LADCM A,[m] Add ACC to Data Memory with Carry

Description: The contents of the specified Data Memory, Accumulator and the carry flag are added. The result is stored in the specified Data Memory.

Operation: [m] ← ACC + [m] + C

Affected flag(s): OV, Z, AC, C, SC

LADD A,[m] Add Data Memory to ACC

Description: The contents of the specified Data Memory and the Accumulator are added. The result is stored in the Accumulator.

Operation: ACC ← ACC + [m]

Affected flag(s): OV, Z, AC, C, SC

LADDM A,[m] Add ACC to Data Memory

Description: The contents of the specified Data Memory and the Accumulator are added. The result is stored in the specified Data Memory.

Operation: [m] ← ACC + [m]

Affected flag(s): OV, Z, AC, C, SC

LAND A,[m] Logical AND Data Memory to ACC

Description: Data in the Accumulator and the specified Data Memory perform a bitwise logical AND operation. The result is stored in the Accumulator.

Operation: ACC ← ACC ″AND″ [m]

Affected flag(s): Z

LANDM A,[m] Logical AND ACC to Data Memory

Description: Data in the specified Data Memory and the Accumulator perform a bitwise logical AND operation. The result is stored in the Data Memory.

Operation: [m] ← ACC ″AND″ [m]

Affected flag(s): Z

LCLR [m] Clear Data Memory

Description: Each bit of the specified Data Memory is cleared to 0.

Operation: [m] ← 00H

Affected flag(s): None

LCLR [m].i Clear bit of Data Memory

Description: Bit i of the specified Data Memory is cleared to 0.

Operation: [m].i ← 0

Affected flag(s): None

LCPL [m] Complement Data Memory

Description: Each bit of the specified Data Memory is logically complemented (1′s complement). Bits which previously contained a 1 are changed to 0 and vice versa.

Operation: $[m] \leftarrow \overline{[m]}$

Affected flag(s): Z

LCPLA [m] Complement Data Memory with result in ACC

Description: Each bit of the specified Data Memory is logically complemented (1′s complement). Bits which previously contained a 1 are changed to 0 and vice versa. The complemented result is stored in the Accumulator and the contents of the Data Memory remain unchanged.

Operation: $ACC \leftarrow \overline{[m]}$

Affected flag(s): Z

LDAA [m] Decimal-Adjust ACC for addition with result in Data Memory

Description: Convert the contents of the Accumulator value to a BCD (Binary Coded Decimal) value resulting from the previous addition of two BCD variables. If the low nibble is greater than 9 or if AC flag is set, then a value of 6 will be added to the low nibble. Otherwise the low nibble remains unchanged. If the high nibble is greater than 9 or if the C flag is set, then a value of 6 will be added to the high nibble. Essentially, the decimal conversion is performed by adding 00H, 06H, 60H or 66H depending on the Accumulator and flag conditions. Only the C flag may be affected by this instruction which indicates that if the original BCD sum is greater than 100, it allows multiple precision decimal addition.

Operation:
$[m] \leftarrow ACC + 00H$ or
$[m] \leftarrow ACC + 06H$ or
$[m] \leftarrow ACC + 60H$ or
$[m] \leftarrow ACC + 66H$

Affected flag(s): C

LDEC [m] Decrement Data Memory

Description: Data in the specified Data Memory is decremented by 1.

Operation: $[m] \leftarrow [m] - 1$

Affected flag(s): Z

LDECA [m] Decrement Data Memory with result in ACC

Description: Data in the specified Data Memory is decremented by 1. The result is stored in the Accumulator. The contents of the Data Memory remain unchanged.

Operation: $ACC \leftarrow [m] - 1$

Affected flag(s): Z

LINC [m] Increment Data Memory

Description: Data in the specified Data Memory is incremented by 1.

Operation: $[m] \leftarrow [m] + 1$

Affected flag(s): Z

LINCA [m] Increment Data Memory with result in ACC

Description: Data in the specified Data Memory is incremented by 1. The result is stored in the Accumulator. The contents of the Data Memory remain unchanged.

Operation: $ACC \leftarrow [m] + 1$

Affected flag(s): Z

LMOV A,[m] Move Data Memory to ACC

Description The contents of the specified Data Memory are copied to the Accumulator.

Operation ACC ← [m]

Affected flag(s) None

LMOV [m],A Move ACC to Data Memory

Description The contents of the Accumulator are copied to the specified Data Memory.

Operation [m] ← ACC

Affected flag(s) None

LOR A,[m] Logical OR Data Memory to ACC

Description Data in the Accumulator and the specified Data Memory perform a bitwise logical OR operation. The result is stored in the Accumulator.

Operation ACC ← ACC ″OR″ [m]

Affected flag(s) Z

LORM A,[m] Logical OR ACC to Data Memory

Description Data in the specified Data Memory and the Accumulator perform a bitwise logical OR operation. The result is stored in the Data Memory.

Operation [m] ← ACC ″OR″ [m]

Affected flag(s) Z

LRL [m] Rotate Data Memory left

Description The contents of the specified Data Memory are rotated left by 1 bit with bit 7 rotated into bit 0.

Operation [m].(i+1) ← [m].i; (i=0~6)
[m].0 ← [m].7

Affected flag(s) None

LRLA [m] Rotate Data Memory left with result in ACC

Description The contents of the specified Data Memory are rotated left by 1 bit with bit 7 rotated into bit 0. The rotated result is stored in the Accumulator and the contents of the Data Memory remain unchanged.

Operation ACC.(i+1) ← [m].i; (i=0~6)
ACC.0 ← [m].7

Affected flag(s) None

LRLC [m] Rotate Data Memory left through Carry

Description The contents of the specified Data Memory and the carry flag are rotated left by 1 bit. Bit 7 replaces the Carry bit and the original carry flag is rotated into bit 0.

Operation [m].(i+1) ← [m].i; (i=0~6)
[m].0 ← C
C ← [m].7

Affected flag(s) C

LRLCA [m] Rotate Data Memory left through Carry with result in ACC

Description Data in the specified Data Memory and the carry flag are rotated left by 1 bit. Bit 7 replaces the Carry bit and the original carry flag is rotated into the bit 0. The rotated result is stored in the Accumulator and the contents of the Data Memory remain unchanged.

Operation ACC.(i+1) ← [m].i; (i=0~6)
ACC.0 ← C
C ← [m].7

Affected flag(s) C

LRR [m] Rotate Data Memory right

Description: The contents of the specified Data Memory are rotated right by 1 bit with bit 0 rotated into bit 7.

Operation:
[m].i ← [m].(i+1); (i=0~6)
[m].7 ← [m].0

Affected flag(s): None

LRRA [m] Rotate Data Memory right with result in ACC

Description: Data in the specified Data Memory is rotated right by 1 bit with bit 0 rotated into bit 7. The rotated result is stored in the Accumulator and the contents of the Data Memory remain unchanged.

Operation:
ACC.i ← [m].(i+1); (i=0~6)
ACC.7 ← [m].0

Affected flag(s): None

LRRC [m] Rotate Data Memory right through Carry

Description: The contents of the specified Data Memory and the carry flag are rotated right by 1 bit. Bit 0 replaces the Carry bit and the original carry flag is rotated into bit 7.

Operation:
[m].i ← [m].(i+1); (i=0~6)
[m].7 ← C
C ← [m].0

Affected flag(s): C

LRRCA [m] Rotate Data Memory right through Carry with result in ACC

Description: Data in the specified Data Memory and the carry flag are rotated right by 1 bit. Bit 0 replaces the Carry bit and the original carry flag is rotated into bit 7. The rotated result is stored in the Accumulator and the contents of the Data Memory remain unchanged.

Operation:
ACC.i ← [m].(i+1); (i=0~6)
ACC.7 ← C
C ← [m].0

Affected flag(s): C

LSBC A,[m] Subtract Data Memory from ACC with Carry

Description: The contents of the specified Data Memory and the complement of the carry flag are subtracted from the Accumulator. The result is stored in the Accumulator. Note that if the result of subtraction is negative, the C flag will be cleared to 0, otherwise if the result is positive or zero, the C flag will be set to 1.

Operation: $ACC \leftarrow ACC - [m] - \overline{C}$

Affected flag(s): OV, Z, AC, C, SC, CZ

LSBCM A,[m] Subtract Data Memory from ACC with Carry and result in Data Memory

Description: The contents of the specified Data Memory and the complement of the carry flag are subtracted from the Accumulator. The result is stored in the Data Memory. Note that if the result of subtraction is negative, the C flag will be cleared to 0, otherwise if the result is positive or zero, the C flag will be set to 1.

Operation: $[m] \leftarrow ACC - [m] - \overline{C}$

Affected flag(s): OV, Z, AC, C, SC, CZ

LSDZ [m] Skip if decrement Data Memory is 0

Description: The contents of the specified Data Memory are first decremented by 1. If the result is 0 the following instruction is skipped. As this requires the insertion of a dummy instruction while the next instruction is fetched, it is a three cycle instruction. If the result is not 0 the program proceeds with the following instruction.

Operation: [m] ← [m] − 1
Skip if [m]=0

Affected flag(s): None

LSDZA [m] Skip if decrement Data Memory is zero with result in ACC

Description: The contents of the specified Data Memory are first decremented by 1. If the result is 0, the following instruction is skipped. The result is stored in the Accumulator but the specified Data Memory contents remain unchanged. As this requires the insertion of a dummy instruction while the next instruction is fetched, it is a three cycle instruction. If the result is not 0, the program proceeds with the following instruction.

Operation: ACC ← [m] − 1
Skip if ACC=0

Affected flag(s): None

LSET [m] Set Data Memory

Description: Each bit of the specified Data Memory is set to 1.

Operation: [m] ← FFH

Affected flag(s): None

LSET [m].i Set bit of Data Memory

Description: Bit i of the specified Data Memory is set to 1.

Operation: [m].i ← 1

Affected flag(s): None

LSIZ [m] Skip if increment Data Memory is 0

Description: The contents of the specified Data Memory are first incremented by 1. If the result is 0, the following instruction is skipped. As this requires the insertion of a dummy instruction while the next instruction is fetched, it is a three cycle instruction. If the result is not 0 the program proceeds with the following instruction.

Operation: [m] ← [m] + 1
Skip if [m]=0

Affected flag(s): None

LSIZA [m] Skip if increment Data Memory is zero with result in ACC

Description: The contents of the specified Data Memory are first incremented by 1. If the result is 0, the following instruction is skipped. The result is stored in the Accumulator but the specified Data Memory contents remain unchanged. As this requires the insertion of a dummy instruction while the next instruction is fetched, it is a three cycle instruction. If the result is not 0 the program proceeds with the following instruction.

Operation: ACC ← [m] + 1
Skip if ACC=0

Affected flag(s): None

LSNZ [m].i Skip if bit i of Data Memory is not 0

Description: If bit i of the specified Data Memory is not 0, the following instruction is skipped. As this requires the insertion of a dummy instruction while the next instruction is fetched, it is a three cycle instruction. If the result is 0 the program proceeds with the following instruction.

Operation: Skip if [m].i ≠ 0

Affected flag(s): None

LSNZ [m] Skip if Data Memory is not 0

Description: The contents of the specified Data Memory are read out and then written to the specified Data Memory again. If the content of the specified Data Memory is not 0, the following instruction is skipped. As this requires the insertion of a dummy instruction while the next instruction is fetched, it is a three cycle instruction. If the result is 0 the program proceeds with the following instruction.

Operation: Skip if [m] ≠ 0

Affected flag(s): None

LSUB A,[m] Subtract Data Memory from ACC

Description: The specified Data Memory is subtracted from the contents of the Accumulator. The result is stored in the Accumulator. Note that if the result of subtraction is negative, the C flag will be cleared to 0, otherwise if the result is positive or zero, the C flag will be set to 1.

Operation: ACC ← ACC − [m]

Affected flag(s): OV, Z, AC, C, SC, CZ

LSUBM A,[m] Subtract Data Memory from ACC with result in Data Memory

Description: The specified Data Memory is subtracted from the contents of the Accumulator. The result is stored in the Data Memory. Note that if the result of subtraction is negative, the C flag will be cleared to 0, otherwise if the result is positive or zero, the C flag will be set to 1.

Operation: [m] ← ACC − [m]

Affected flag(s): OV, Z, AC, C, SC, CZ

LSWAP [m] Swap nibbles of Data Memory

Description: The low-order and high-order nibbles of the specified Data Memory are interchanged.

Operation: [m].3~[m].0 ↔ [m].7~[m].4

Affected flag(s): None

LSWAPA [m] Swap nibbles of Data Memory with result in ACC

Description: The low-order and high-order nibbles of the specified Data Memory are interchanged. The result is stored in the Accumulator. The contents of the Data Memory remain unchanged.

Operation: ACC.3~ACC.0 ← [m].7~[m].4
ACC.7~ACC.4 ← [m].3~[m].0

Affected flag(s): None

LSZ [m] Skip if Data Memory is 0

Description: The contents of the specified Data Memory are read out and then written to the specified Data Memory again. If the contents of the specified Data Memory is 0, the following instruction is skipped. As this requires the insertion of a dummy instruction while the next instruction is fetched, it is a three cycle instruction. If the result is not 0 the program proceeds with the following instruction.

Operation: Skip if [m]=0

Affected flag(s): None

LSZA [m] Skip if Data Memory is 0 with data movement to ACC

Description: The contents of the specified Data Memory are copied to the Accumulator. If the value is zero, the following instruction is skipped. As this requires the insertion of a dummy instruction while the next instruction is fetched, it is a three cycle instruction. If the result is not 0 the program proceeds with the following instruction.

Operation: ACC ← [m]
Skip if [m]=0

Affected flag(s): None

LSZ [m].i Skip if bit i of Data Memory is 0

Description: If bit i of the specified Data Memory is 0, the following instruction is skipped. As this requires the insertion of a dummy instruction while the next instruction is fetched, it is a three cycle instruction. If the result is not 0, the program proceeds with the following instruction.

Operation: Skip if [m].i=0

Affected flag(s): None

LTABRD [m] Read table (specific page) to TBLH and Data Memory

Description: The low byte of the program code (specific page) addressed by the table pointer (TBHP and TBLP) is moved to the specified Data Memory and the high byte moved to TBLH.

Operation: [m] ← program code (low byte)
TBLH ← program code (high byte)

Affected flag(s): None

LTABRDL [m] Read table (last page) to TBLH and Data Memory

Description: The low byte of the program code (last page) addressed by the table pointer (TBLP) is moved to the specified Data Memory and the high byte moved to TBLH.

Operation: [m] ← program code (low byte)
TBLH ← program code (high byte)

Affected flag(s): None

LITABRD [m] Increment table pointer low byte first and read table (specific page) to TBLH and Data Memory

Description: Increment table pointer low byte, TBLP, first and then the program code (specific page) addressed by the table pointer (TBHP and TBLP) is moved to the specified Data Memory and the high byte moved to TBLH.

Operation: [m] ← program code (low byte)
TBLH ← program code (high byte)

Affected flag(s): None

LITABRDL [m] Increment table pointer low byte first and read table (last page) to TBLH and Data Memory

Description: Increment table pointer low byte, TBLP, first and then the low byte of the program code (last page) addressed by the table pointer (TBLP) is moved to the specified Data Memory and the high byte moved to TBLH.

Operation: [m] ← program code (low byte)
TBLH ← program code (high byte)

Affected flag(s): None

LXOR A,[m] Logical XOR Data Memory to ACC

Description: Data in the Accumulator and the specified Data Memory perform a bitwise logical XOR operation. The result is stored in the Accumulator.

Operation: ACC ← ACC ″XOR″ [m]

Affected flag(s): Z

LXORM A,[m] Logical XOR ACC to Data Memory

Description: Data in the specified Data Memory and the Accumulator perform a bitwise logical XOR operation. The result is stored in the Data Memory.

Operation: [m] ← ACC ″XOR″ [m]

Affected flag(s): Z

Package Information

Note that the package information provided here is for consultation purposes only. As this information may be updated at regular intervals users are reminded to consult the Holtek website for the latest version of the Package/Carton Information.

Additional supplementary information with regard to packaging is listed below. Click on the relevant section to be transferred to the relevant website page.

- Package Information (include Outline Dimensions, Product Tape and Reel Specifications)
- The Operation Instruction of Packing Materials
- Carton information

SAW Type 32-pin QFN (4mm×4mm×0.75mm) Outline Dimensions

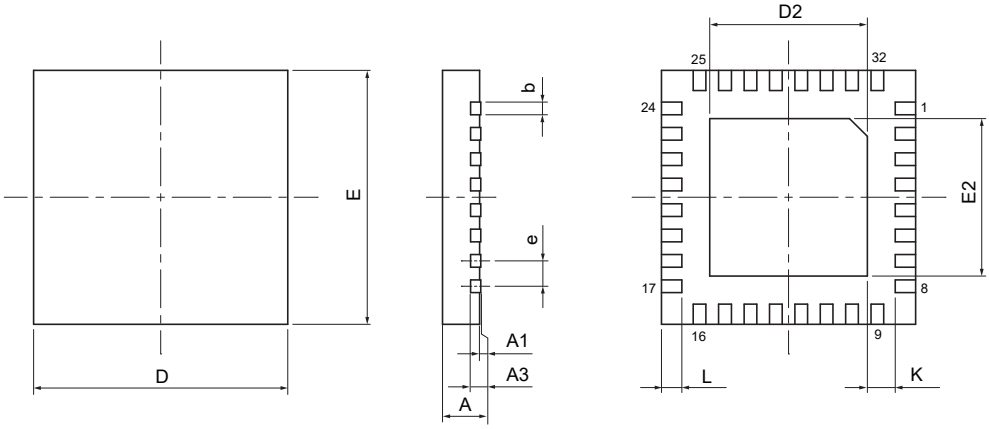

Symbol	Dimensions in inch		
	Min.	Nom.	Max.
A	0.028	0.030	0.031
A1	0.000	0.001	0.002
A3	0.008 REF		
b	0.006	0.008	0.010
D	0.157 BSC		
E	0.157 BSC		
e	0.016 BSC		
D2	0.100	—	0.108
E2	0.100	—	0.108
L	0.010	—	0.018
K	0.008	—	—

Symbol	Dimensions in mm		
	Min.	Nom.	Max.
A	0.70	0.75	0.80
A1	0.00	0.02	0.05
A3	0.203 REF		
b	0.15	0.20	0.25
D	4.00 BSC		
E	4.00 BSC		
e	0.40 BSC		
D2	2.55	—	2.75
E2	2.55	—	2.75
L	0.25	—	0.45
K	0.20	—	—

48-pin LQFP (7mm×7mm) Outline Dimensions

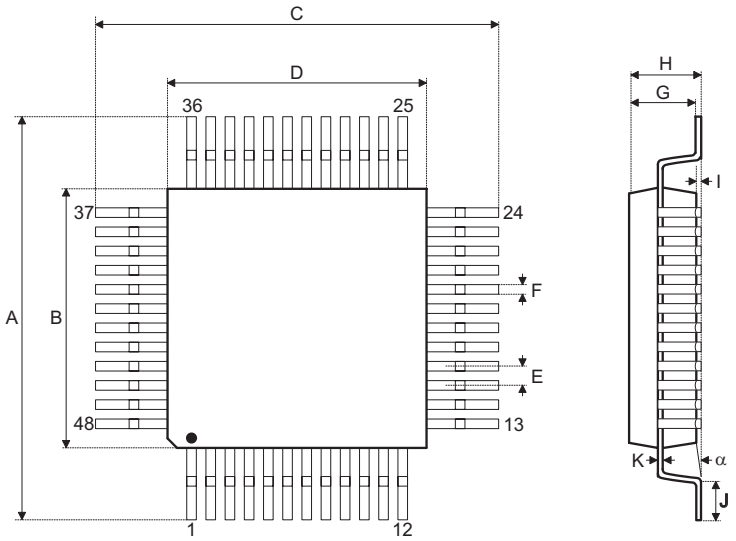

Symbol	Dimensions in inch		
	Min.	Nom.	Max.
A		0.354 BSC	
B		0.276 BSC	
C		0.354 BSC	
D		0.276 BSC	
E		0.020 BSC	
F	0.007	0.009	0.011
G	0.053	0.055	0.057
H	—	—	0.063
I	0.002	—	0.006
J	0.018	0.024	0.030
K	0.004	—	0.008
α	0°	—	7°

Symbol	Dimensions in mm		
	Min.	Nom.	Max.
A		9.00 BSC	
B		7.00 BSC	
C		9.00 BSC	
D		7.00 BSC	
E		0.50 BSC	
F	0.17	0.22	0.27
G	1.35	1.40	1.45
H	—	—	1.60
I	0.05	—	0.15
J	0.45	0.60	0.75
K	0.09	—	0.20
α	0°	—	7°

64-pin LQFP (7mm×7mm) Outline Dimensions

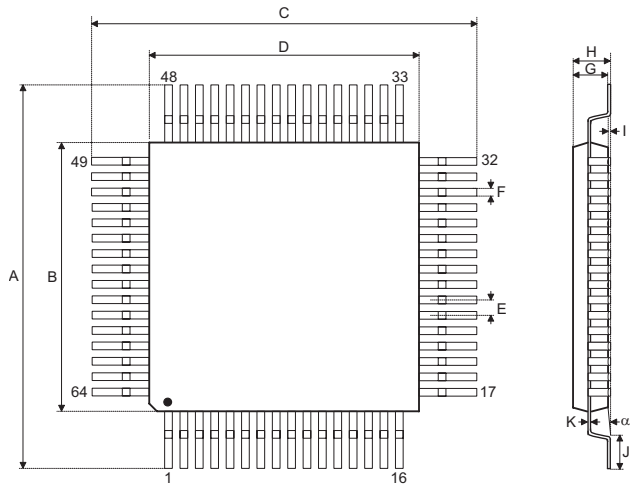

Symbol	Dimensions in inch		
	Min.	Nom.	Max.
A		0.354 BSC	
B		0.276 BSC	
C		0.354 BSC	
D		0.276 BSC	
E		0.016 BSC	
F	0.005	0.007	0.009
G	0.053	0.055	0.057
H	—	—	0.063
I	0.002	—	0.006
J	0.018	0.024	0.030
K	0.004	—	0.008
α	0°	—	7°

Symbol	Dimensions in mm		
	Min.	Nom.	Max.
A		9.00 BSC	
B		7.00 BSC	
C		9.00 BSC	
D		7.00 BSC	
E		0.40 BSC	
F	0.13	0.18	0.23
G	1.35	1.40	1.45
H	—	—	1.60
I	0.05	—	0.15
J	0.45	0.60	0.75
K	0.09	—	0.20
α	0°	—	7°

80-pin LQFP (10mm×10mm) Outline Dimensions

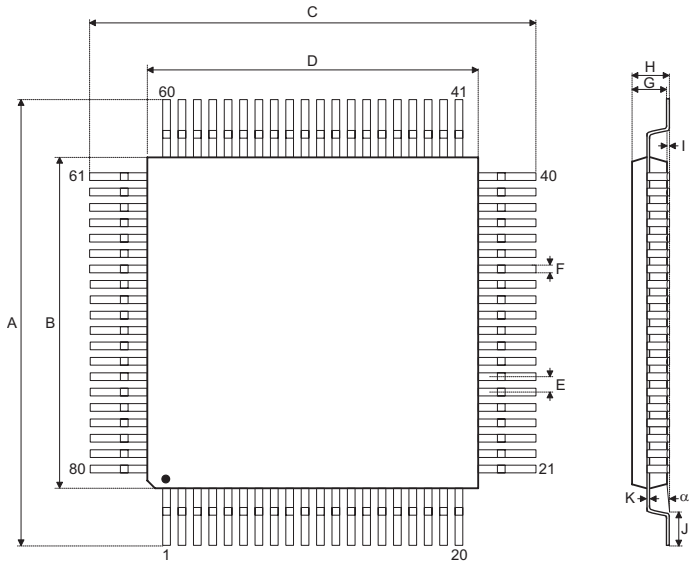

Symbol	Dimensions in inch		
	Min.	Nom.	Max.
A		0.472 BSC	
B		0.394 BSC	
C		0.472 BSC	
D		0.394 BSC	
E		0.016 BSC	
F	0.005	0.007	0.009
G	0.053	0.055	0.057
H	—	—	0.063
I	0.002	—	0.006
J	0.018	0.024	0.030
K	0.004	—	0.008
α	0°	—	7°

Symbol	Dimensions in mm		
	Min.	Nom.	Max.
A		12.00 BSC	
B		10.00 BSC	
C		12.00 BSC	
D		10.00 BSC	
E		0.40 BSC	
F	0.13	0.18	0.23
G	1.35	1.40	1.45
H	—	—	1.60
I	0.05	—	0.15
J	0.45	0.60	0.75
K	0.09	—	0.20
α	0°	—	7°

Copyright© 2025 by HOLTEK SEMICONDUCTOR INC. All Rights Reserved.

The information provided in this document has been produced with reasonable care and attention before publication, however, HOLTEK does not guarantee that the information is completely accurate. The information contained in this publication is provided for reference only and may be superseded by updates. HOLTEK disclaims any expressed, implied or statutory warranties, including but not limited to suitability for commercialization, satisfactory quality, specifications, characteristics, functions, fitness for a particular purpose, and non-infringement of any third-party's rights. HOLTEK disclaims all liability arising from the information and its application. In addition, HOLTEK does not recommend the use of HOLTEK's products where there is a risk of personal hazard due to malfunction or other reasons. HOLTEK hereby declares that it does not authorise the use of these products in life-saving, life-sustaining or safety critical components. Any use of HOLTEK's products in life-saving/sustaining or safety applications is entirely at the buyer's risk, and the buyer agrees to defend, indemnify and hold HOLTEK harmless from any damages, claims, suits, or expenses resulting from such use. The information provided in this document, including but not limited to the content, data, examples, materials, graphs, and trademarks, is the intellectual property of HOLTEK (and its licensors, where applicable) and is protected by copyright law and other intellectual property laws. No license, express or implied, to any intellectual property right, is granted by HOLTEK herein. HOLTEK reserves the right to revise the information described in the document at any time without prior notice. For the latest information, please contact us.