TECHNICAL MANUAL

8101/8104 Gigabit Ethernet Controller

November 2001

LSI LOGIC®

This document contains proprietary information of LSI Logic Corporation. The information contained herein is not to be used by or disclosed to third parties without the express written permission of an officer of LSI Logic Corporation.

Document DB14-000123-04, Fourth Edition (November 2001)
This document describes revision/release 1 of the LSI Logic Corporation 8101/8104 Gigabit Ethernet Controller and will remain the official reference source for all revisions/releases of this product until rescinded by an update.

LSI Logic Corporation reserves the right to make changes to any products herein at any time without notice. LSI Logic does not assume any responsibility or liability arising out of the application or use of any product described herein, except as expressly agreed to in writing by LSI Logic; nor does the purchase or use of a product from LSI Logic convey a license under any patent rights, copyrights, trademark rights, or any other of the intellectual property rights of LSI Logic or third parties.

Copyright © 2000–2001 by LSI Logic Corporation. All rights reserved. Portions

TRADEMARK ACKNOWLEDGMENT
The LSI Logic logo design is a registered trademark of LSI Logic Corporation. All other brand and product names may be trademarks of their respective companies.

IF

To receive product literature, visit us at http://www.lsilogic.com.

For a current list of our distributors, sales offices, and design resource centers, view our web page located at

http://www.lsilogic.com/contacts/na_salesoffices.html

Copyright © 2000–2001 by LSI Logic Corporation. All rights reserved.

Preface

This book is the primary reference and technical manual for the 8101/8104 Gigabit Ethernet Controller. It contains a complete functional description and includes complete physical and electrical specifications for the 8101/8104.

The 8104 is functionally the same as the 8101, except that the 8104 is in a 208-pin Ball Grid Array (BGA) package and the 8101 is in a 208-pin Plastic Quad Flat Pack (PQFP) package

Audience

This document assumes that you have some familiarity with application specific integrated circuits and related support devices. The people who benefit from this book are:

- Engineers and managers who are evaluating the 8101/8104 Gigabit Ethernet Controller for possible use in a system
- Engineers who are designing the 8101/8104 Gigabit Ethernet Controller into a system

Organization

This document has the following chapters:

- Chapter 1, **Introduction**, describes the 8101/8104 Gigabit Ethernet Controller, its basic features and benifits. This chapter also describes the differences between the 8101 and 8104.
- Chapter 2, **Functional Description**, provides a high level description of the 8101/8104 Gigabit Ethernet Controller.

Copyright © 2000–2001 by LSI Logic Corporation. All rights reserved.

- Chapter 3, **Signal Descriptions**, provides a description of the signals used and generated by the 8101/8104 Gigabit Ethernet Controller.
- Chapter 4, **Registers**, provides a description of the register addresses and definitions.
- Chapter 5, **Application Information**, provides application considerations.
- Chapter 6, **Specifications**, describes the specifications of the 8101/8104 Gigabit Ethernet Controller.

Abbreviations Used in This Manual

100BASE-FX	100 Mbit/s Fiber Optic Ethernet
100BASE-TX	100 Mbit/s Twisted-Pair Ethernet
10BASE-T	10 Mbit/s Twisted-Pair Ethernet
4B5B	4-Bit 5-Bit
BGA	Ball Grid Array
CLK	Clock
CRC	Cyclic Redundancy Check
CRS	Carrier Sense
CSMA	Carrier Sense Multiple Access
CWRD	Codeword
DA	Destination Address
ECL	Emitter-Coupled Logic
EOF	End of Frame
ESD	End of Stream Delimiter
FCS	Frame Check Sequence
FDX	Full-Duplex
FEF	Far End Fault
FLP	Fast Link Pulse
FX	Fiber
HDX	Half-Duplex
HIZ	High Impedance
I/G	Individual/Group
IETF	Internet Engineering Task Force
IPG	Interpacket Gap
IREF	Reference Current
L/T	Length and Type
LSB	Least Significant Bit

Copyright © 2000–2001 by LSI Logic Corporation. All rights reserved.

MIB	Management Information Base
MLT3	Multilevel Transmission (3 levels)
MSB	Most Significant Bit
mV	millivolt
NLP	Normal Link Pulse
NRZI	Nonreturn to Zero Inverted
NRZ	Nonreturn to Zero
OP	Opcode
PCB	Printed Circuit Board
pF	picofarad
PRE	Preamble
R/LH	Read Latched High
R/LHI	Read Latched High with Interrupt
R/LL	Read Latched Low
R/LLI	Read Latched Low with Interrupt
R/LT	Read Latched Transition
R/LTI	Read Latched Transition with Interrupt
R/WSC	Read/Write Self Clearing
RFC	Request for Comments
RJ-45	Registered Jack-45
RMON	Remote Monitoring
SA	Start Address or Station Address
SFD	Start of Frame Delimiter
SNMP	Simple Network Management Protocol
SOI	Start of Idle
Split-32	Independent 32-bit input and output busses; one for transmit and one for receive
SSD	Start of Stream Delimiter
STP	Shielded Twisted Pair
TP	Twisted Pair
µH	microHenry
µP	microprocessor
UTP	Unshielded Twisted Pair

Conventions Used in This Manual

The first time a word or phrase is defined in this manual, it is *italicized.*

Copyright © 2000–2001 by LSI Logic Corporation. All rights reserved.

The word *assert* means to drive a signal true or active. The word *deassert* means to drive a signal false or inactive. Signals that are active LOW end in an “n.”

Hexadecimal numbers are indicated by the prefix “0x” —for example, 0x32CF. Binary numbers are indicated by the prefix “0b” —for example, 0b0011.0010.1100.1111.

Copyright © 2000–2001 by LSI Logic Corporation. All rights reserved.

Contents

CChapter 1 Introduction

1.1 Overview 1-1
1.2 Features 1-2

Chapter 2 Functional Description

2.1 Overview 2-2
2.2 Transmit Data Path 2-2
2.3 Receive Data Path 2-6
2.4 Register Structure 2-6
2.5 Ethernet Frame Format 2-6
2.5.1 Preamble and SFD 2-7
2.5.2 Destination Address 2-7
2.5.3 Source Address 2-7
2.5.4 Length/Type Field 2-7
2.5.5 Data 2-8
2.5.6 Frame Check Sequence (FCS) 2-8
2.5.7 Interpacket Gap (IPG) 2-8
2.6 System Interface 2-8
2.6.1 Data Format and Bit Order 2-8
2.6.2 Transmit Timing 2-9
2.6.3 Receive Timing 2-11
2.6.4 Bus Width 2-14
2.6.5 System Interface Disable 2-14
2.7 Transmit MAC 2-15
2.7.1 Preamble and SFD Generation 2-15
2.7.2 AutoPad 2-15
2.7.3 CRC Generation 2-15
2.7.4 Interpacket Gap 2-16
2.7.5 MAC Control Frame Generation 2-17

Copyright © 2000–2001 by LSI Logic Corporation. All rights reserved.

2.8 Receive MAC 2-17
2.8.1 Preamble and SFD Stripping 2-17
2.8.2 CRC Stripping 2-17
2.8.3 Unicast Address Filter 2-18
2.8.4 Multicast Address Filter 2-18
2.8.5 Broadcast Address Filter 2-19
2.8.6 Reject or Accept All Packets 2-20
2.8.7 Frame Validity Checks 2-20
2.8.8 Maximum Packet Size 2-21
2.8.9 MAC Control Frame Check 2-21
2.9 Transmit FIFO 2-22
2.9.1 AutoSend 2-22
2.9.2 Watermarks 2-22
2.9.3 TX Underflow 2-23
2.9.4 TX Overflow 2-23
2.9.5 Link Down FIFO Flush 2-24
2.10 Receive FIFO 2-24
2.10.1 Watermarks 2-24
2.10.2 RX Overflow 2-25
2.10.3 RX Underflow 2-25
2.11 8B10B PCS 2-25
2.11.1 8B10B Encoder 2-26
2.11.2 8B10B Decoder 2-28
2.11.3 Start of Packet 2-29
2.11.4 End Of Packet 2-30
2.11.5 Idle 2-30
2.11.6 Receive Word Synchronization 2-31
2.11.7 AutoNegotiation 2-31
2.12 10-Bit PHY Interface 2-31
2.12.1 Data Format and Bit Order 2-32
2.12.2 Transmit 2-32
2.12.3 Receive 2-32
2.12.4 Lock To Reference 2-33
2.12.5 PHY Loopback 2-33
2.12.6 Signal Detect 2-33
2.12.7 TBC Disable 2-34
2.13 Packet Discard 2-34
2.13.1 Transmit Discards 2-34

Copyright © 2000–2001 by LSI Logic Corporation. All rights reserved.

2.13.2 Receive Discards 2-35
2.13.3 Discard Output Indication 2-36
2.13.4 AutoClear Mode 2-36
2.13.5 AutoAbort Mode 2-36
2.14 Receive Status Word 2-37
2.14.1 Format 2-37
2.14.2 Append Options 2-38
2.14.3 Status Word for Discarded Packets 2-38
2.14.4 Status Word for RXABORT Packets 2-38
2.15 AutoNegotiation 2-39
2.15.1 Next Page 2-40
2.15.2 Negotiation Status 2-41
2.15.3 AutoNegotiation Restart 2-41
2.15.4 AutoNegotiation Enable 2-42
2.15.5 Link Indication 2-42
2.16 Flow Control 2-42
2.17 MAC Control Frames 2-42
2.17.1 Automatic Pause Frame Generation 2-43
2.17.2 Transmitter Pause Disable 2-44
2.17.3 Pass Through to FIFO 2-44
2.17.4 Reserved Multicast Address Disable 2-46
2.17.5 MAC Control Frame AutoSend 2-46
2.18 Reset 2-46
2.19 Counters 2-47
2.19.1 Counter Half Full 2-57
2.19.2 Counter Reset On Read 2-57
2.19.3 Counter Rollover 2-58
2.19.4 Counter Maximum Packet Size 2-58
2.19.5 Counter Reset 2-58
2.20 Loopback 2-59
2.21 Test Modes 2-59

Chapter 3 Signal Descriptions
3.1 System Interface Signals 3-3
3.2 10-Bit PHY Interface Signals 3-7
3.3 Register Interface Signals 3-8
3.4 Micellaneous Signals 3-9

Copyright © 2000–2001 by LSI Logic Corporation. All rights reserved.

3.5 Power Supply Signals 3-10

Chapter 4 Registers

4.1 Register Interface 4-1
4.1.1 Bit Types 4-2
4.1.2 Interrupt 4-3
4.1.3 Register Structure 4-4
4.2 Register Addresses 4-4
4.3 Register Definitions 4-11
4.3.1 Register 0–MAC Address 1 4-11
4.3.2 Register 1–MAC Address 2 4-12
4.3.3 Register 2–MAC Address 3 4-12
4.3.4 Register 3–MAC Address Filter 1 4-12
4.3.5 Register 4–MAC Address Filter 2 4-13
4.3.6 Register 5–MAC Address Filter 3 4-14
4.3.7 Register 6–MAC Address Filter 4 4-14
4.3.8 Register 7–Configuration 1 4-15
4.3.9 Register 8–Configuration 2 4-17
4.3.10 Register 9–Configuration 3 4-19
4.3.11 Register 10–Configuration 4 4-22
4.3.12 Register 11–Status 1 4-23
4.3.13 Register 14–Status Mask 1 4-25
4.3.14 Register 17–Transmit FIFO Threshold 4-26
4.3.15 Register 18–Receive FIFO Threshold 4-27
4.3.16 Register 19–Flow Control 1 4-28
4.3.17 Register 20–Flow Control 2 4-29
4.3.18 Register 21–AutoNegotiation Base Page Transmit 4-30
4.3.19 Register 22–AutoNegotiation Base Page Receive 4-31
4.3.20 Register 23–AutoNegotiation Next Page Transmit 4-33
4.3.21 Register 24–AutoNegotiation Next Page Receive 4-34
4.3.22 Register 32–Device ID 4-35
4.3.23 Register 112–115–Counter Half Full 1–4 4-36
4.3.24 Registers 120–123–Counter Half Full Mask 1–4 4-36
4.3.25 Registers 128–233–Counter 1–53 4-37

Copyright © 2000–2001 by LSI Logic Corporation. All rights reserved.

Chapter 5 **Application Information**

5.1 Typical Ethernet Port 5-2
5.2 10-Bit PHY Interface 5-2
5.2.1 External Physical Layer Devices 5-2
5.2.2 Printed Circuit Board Layout 5-3
5.3 System Interface 5-3
5.3.1 Watermarks 5-3
5.3.2 PCB Layout 5-5
5.4 Reset 5-5
5.5 Loopback 5-6
5.6 AutoNegotiation 5-7
5.6.1 AutoNegotiation at Power Up 5-8
5.6.2 Negotiating with a Non-AutoNegotiation Capable Device 5-9
5.7 Management Counters 5-9
5.8 TX Packet and Octet Counters 5-16
5.9 Power Supply Decoupling 5-16

Chapter 6 **Specifications**

6.1 Absolute Maximum Ratings 6-1
6.2 DC Electrical Characteristics 6-2
6.3 AC Electrical Characteristics 6-3
6.4 8101/8104 Pinouts and Pin Listings 6-17
6.5 Package Mechanical Dimensions 6-21

Customer Feedback

Copyright © 2000–2001 by LSI Logic Corporation. All rights reserved.

Copyright © 2000–2001 by LSI Logic Corporation. All rights reserved.

Figures

2.1	8101/8104 Block Diagram	2-3
2.2	Ethernet MAC Frame Format	2-4
2.3	Frame Formats and Bit Ordering	2-5
2.4	Little Endian vs. Big Endian Format	2-9
2.5	RXSOF/RXEOF Position	2-13
2.6	AutoNegotiation Data Format	2-39
2.7	Autogenerated Pause Frame Format	2-45
3.1	8101/8104 Interface Diagram	3-2
5.1	Gigabit Ethernet Switch Port Using the 8101/8104	5-2
5.2	Decoupling Recommendations	5-17
6.1	Input Clock Timing	6-4
6.2	Transmit System Interface Timing	6-6
6.3	Receive System Interface Timing	6-8
6.4	Receive System Interface RXABORT Timing	6-9
6.5	Receive System Interface RXOEn Timing	6-9
6.6	System Interface RXDC/TXDC Timing	6-10
6.7	Transmit 10-Bit PHY Interface Timing	6-11
6.8	Receive 10-Bit PHY Interface Timing	6-12
6.9	Register Interface Timing (Excluding Counter Read Cycle)	6-14
6.10	Register Interface Timing, Counter Read Cycle (of the Same Counter)	6-15
6.11	Register Interface Timing, Counter Read Cycle (Between Different Counters)	6-16
6.12	8101 208-Pin PQFP Pinout	6-17
6.13	8104 208-Pin BGA Pinout	6-19
6.14	208-Pin PQFP Mechanical Drawing	6-21
6.15	208 mini-BGA (HG) Mechanical Drawing	6-22

Copyright © 2000–2001 by LSI Logic Corporation. All rights reserved.

Copyright © 2000–2001 by LSI Logic Corporation. All rights reserved.

Tables

2.1	Length/Type Field Definition	2-8
2.2	Byte Enable Pin vs. Valid Byte Position	2-10
2.3	TXRC Bit and TXCRCn Pin Logic	2-16
2.4	Transmit IPG Selection	2-16
2.5	Multicast Address Filter Map	2-19
2.6	Receive Maximum Packet Size Selection	2-21
2.7	8B10B Coding Table	2-27
2.8	10B Defined Ordered Sets	2-28
2.9	Transmit Discard Conditions	2-34
2.10	Receive Discard Conditions	2-35
2.11	Receive Status Word Definition	2-37
2.12	AutoNegotiation Status Bits	2-41
2.13	Reset Description	2-47
2.14	Counter Definition	2-49
2.15	Counter Maximum Packet Size Selection	2-58
4.1	Register Bit Type Definition	4-3
4.2	Register Addresses	4-4
4.3	Register Default Values	4-10
5.1	Compatible SerDes Devices	5-3
5.2	Reset Procedure	5-6
5.3	SerDes Loopback Procedure	5-7
5.4	AutoNegotiation Power Up Procedure	5-8
5.5	MIB Objects vs. Counter Location for RMON Statistics Group MIB (RFC 1757)	5-10
5.6	MIB Objects vs. Counter Location for SNMP Interface Group MIB (RFC 1213 and 1573)	5-11
5.7	MIB Objects vs. Counter Location for Ethernet-Like Group MIB (RFC 1643)	5-13
5.8	MIB Objects vs. Counter Location For Ethernet MIB (IEEE 802.3z, Clause 30)	5-14
6.1	DC Electrical Characteristics	6-2
6.2	Input Clock Timing Characteristics	6-4
6.3	Transmit System Interface Timing Characteristics	6-5
6.4	Receive System Interface Timing Characteristics	6-7
6.5	System Interface RXDC/TXDC Timing Characteristics	6-10
6.6	Transmit 10-Bit PHY Interface Timing Characteristics	6-11

Copyright © 2000–2001 by LSI Logic Corporation. All rights reserved.

6.7 Receive 10-Bit PHY Interface Timing Characteristics 6-12
6.8 Register Interface Timing Characteristics 6-13
6.9 8101 208-Pin PQFP Pin List (Alphabetical Listing) 6-18
6.10 8104 208-Pin BGA Pin List (Alphabetical Listing) 6-21

Copyright © 2000–2001 by LSI Logic Corporation. All rights reserved.

Chapter 1
Introduction

This chapter contains a brief introduction to the 8101/8104 Gigabit Ethernet Controller. It consists of the following sections:

- Section 1.1, “Overview”
- Section 1.2, “Features”

1.1 Overview

The 8101/8104 Gigabit Ethernet Controller is a complete media access controller (MAC sublayer) with integrated coding logic for fiber and short haul copper media (8 bit/10 bit Physical Coding Sublayer) (8B10B PCS) for 1000 Mbits/s Gigabit Ethernet systems.

The 8104 is functionally the same as the 8101 except that the 8104 is in a 208-pin Ball Grid Array (BGA) package and the 8101 is in a 208-pin Plastic Quad Flat Pack (PQFP) package

The Controller consists of a 32-bit system interface, receive/transmit First In, First Out (FIFO) buffers, a full-duplex Ethernet Media Access Controller (MAC), an 8 bit/10 bit PCS, a 10-bit Physical Layer Device (PHY) interface, and a 16-bit register interface. The controller also contains all the necessary circuitry to implement the IEEE 802.3x Flow Control Algorithm. Flow control messages can be sent automatically without host intervention.

The controller contains 53 counters which satisfy the management objectives of the Remote Monitoring (RMON) Statistics Group MIB, (RFC 1757), Simple Network Management Protocol (SNMP) Interfaces Group (RFC 1213 and 1573), Ethernet-Like Group MIB (RFC 1643), and Ethernet MIB (IEEE 802.3z Clause 30). The controller also contains 136

Copyright © 2000–2001 by LSI Logic Corporation. All rights reserved.

internal 16-bit registers that can be accessed through the register interface. These registers contain configuration inputs, status outputs, and management counter results.

The 8101/8104 is ideal as an Ethernet controller for Gigabit Ethernet switch ports, uplinks, backbones, and adapter cards.

1.2 Features

The 8101/8104 provides the following features.

- Pin-compatible upgrade of 8100
- Combined Ethernet MAC and 8B10B PCS
- 1000 Mbits/s data rate
- 64-bit, 66 MHz external bus interface (4 Gbits/s bandwidth)
- 10-bit interface to external SerDes chip
- 16-bit interface to internal registers and management counters
- Full RMON, SNMP, and Ethernet management counter support
- Independent receive and transmit FIFOs with programmable watermarks
  - 16 Kbytes receive FIFO size
  - 4 Kbytes transmit FIFO size
- AutoNegotiation algorithm on chip
- Full duplex only
- Flow control per IEEE 802.3x
- Automatic CRC generation and checking
- Automatic packet error discarding
- Programmable transmit start threshold
- Interrupt capability
- Support for fiber and short haul copper media
- 3.3 V power supply, 5 V tolerant inputs
- IEEE 802.3 and 802.3z specification compliant

Copyright © 2000–2001 by LSI Logic Corporation. All rights reserved.

Chapter 2
Functional Description

This chapter provides a high level description of the 8101/8104 Gigabit Ethernet Controller and consists of the following sections:

- Section 2.1, “Overview”
- Section 2.2, “Transmit Data Path”
- Section 2.3, “Receive Data Path”
- Section 2.4, “Register Structure”
- Section 2.5, “Ethernet Frame Format”
- Section 2.6, “System Interface”
- Section 2.7, “Transmit MAC”
- Section 2.8, “Receive MAC”
- Section 2.9, “Transmit FIFO”
- Section 2.10, “Receive FIFO”
- Section 2.11, “8B10B PCS”
- Section 2.12, “10-Bit PHY Interface”
- Section 2.13, “Packet Discard”
- Section 2.14, “Receive Status Word”
- Section 2.15, “AutoNegotiation”
- Section 2.16, “Flow Control”
- Section 2.17, “MAC Control Frames”
- Section 2.18, “Reset”
- Section 2.19, “Counters”
- Section 2.20, “Loopback”
- Section 2.21, “Test Modes”

Copyright © 2000–2001 by LSI Logic Corporation. All rights reserved.

2.1 Overview

The 8101/8104 is a complete Media Access Controller (MAC) sublayer with integrated coding logic for fiber and short haul copper media (8B10B PCS sublayer) for 1000 Mbits/s Gigabit Ethernet systems. The controller has seven main sections:

- System interface
- FIFOs
- MAC
- 8B10B PCS
- 10-bit PHY interface
- Register interface.
- Management counters

A block diagram is shown in Figure 2.1.

The controller has a transmit data path and a receive data path. The transmit data path goes in the system interface and out the 10-bit PHY interface, as shown in the top half of Figure 2.1. The receive data path goes in the 10-bit PHY interface and out the system interface, as shown in the bottom half of Figure 2.1.

2.2 Transmit Data Path

Data is input to the system from an external bus. The data is then sent to the transmit FIFO. The transmit FIFO provides temporary storage of the data until it is sent to the MAC transmit section. The transmit MAC formats the data into an Ethernet packet according to IEEE 802.3 specification as shown in Figure 2.2. The transmit MAC also generates MAC control frames and includes logic for AutoNegotiation. The Ethernet frame packet is then sent to the 8B10B PCS.

The 8B10B PCS encodes the data and adds appropriate framing delimiters to create 10-bit symbols as specified in IEEE 802.3 and shown in Figure 2.3. The 10-bit symbols are then sent to the 10-bit PHY interface for transmission to an external PHY device.

Copyright © 2000–2001 by LSI Logic Corporation. All rights reserved.

Copyright © 2000–2001 by LSI Logic Corporation. All rights reserved.

Figure 2.1 8101/8104 Block Diagram

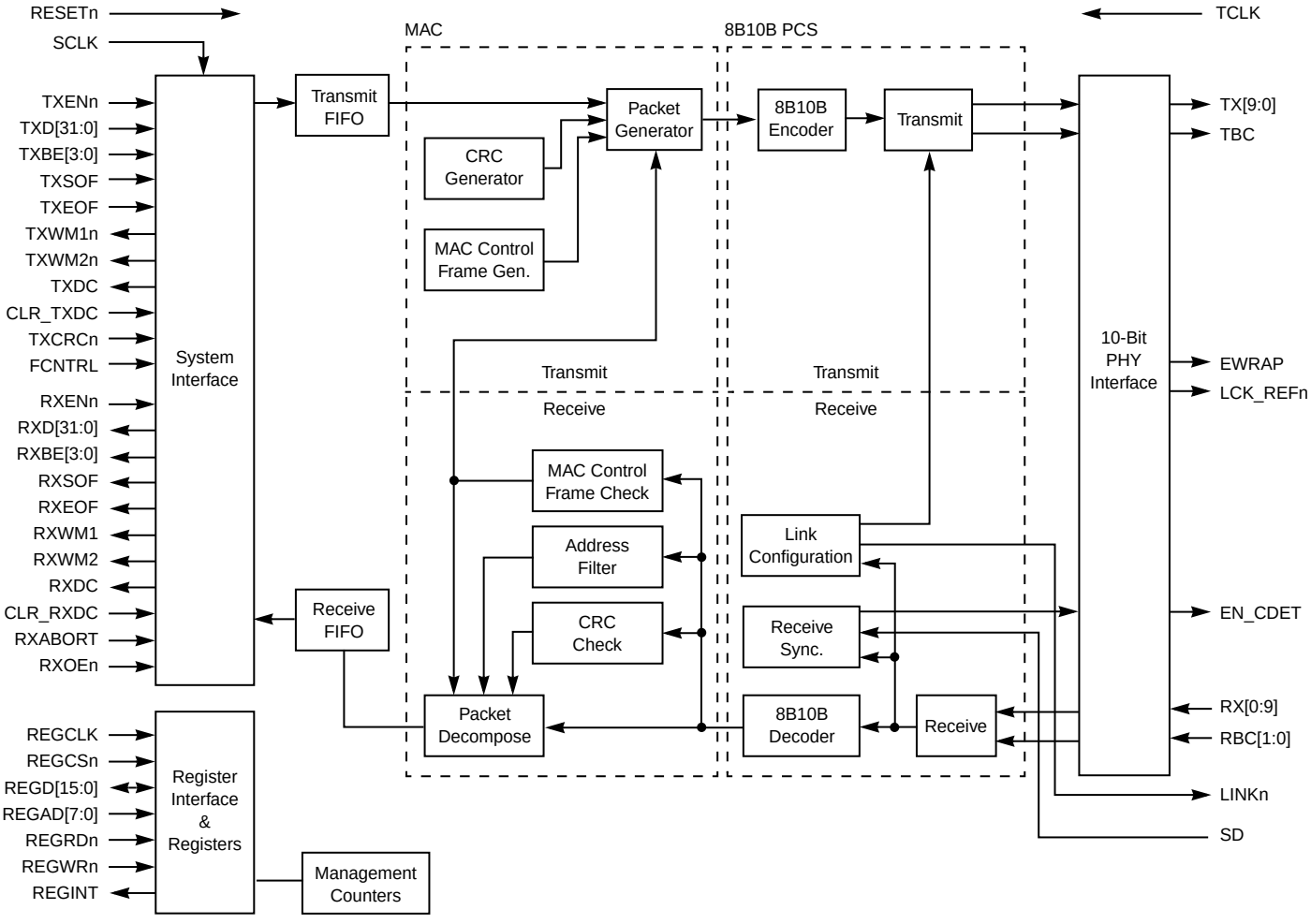

Figure 2.2 Ethernet MAC Frame Format

a. Frame Format

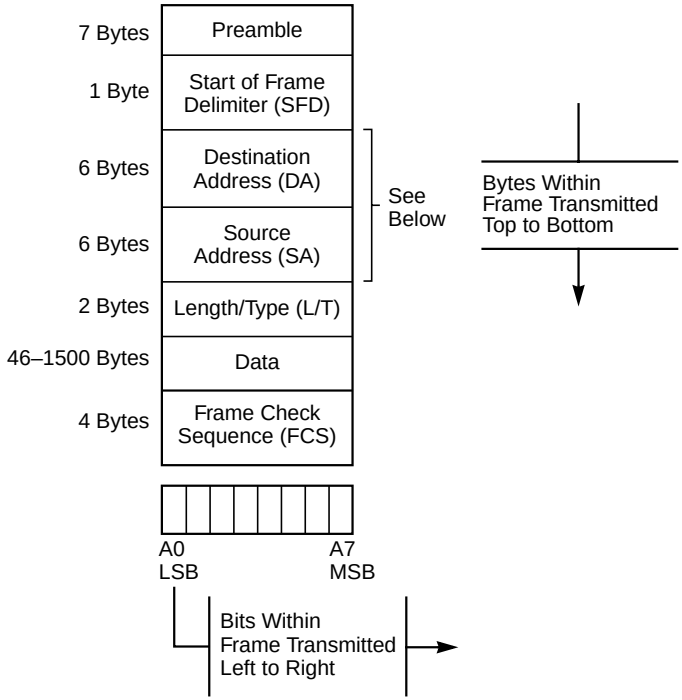

b. Address Field Format

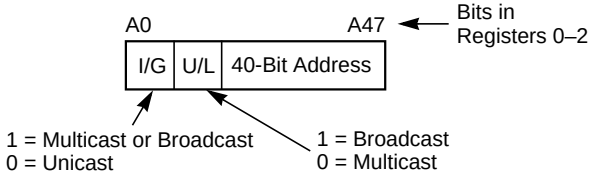

Copyright © 2000–2001 by LSI Logic Corporation. All rights reserved.

Figure 2.3 Frame Formats and Bit Ordering

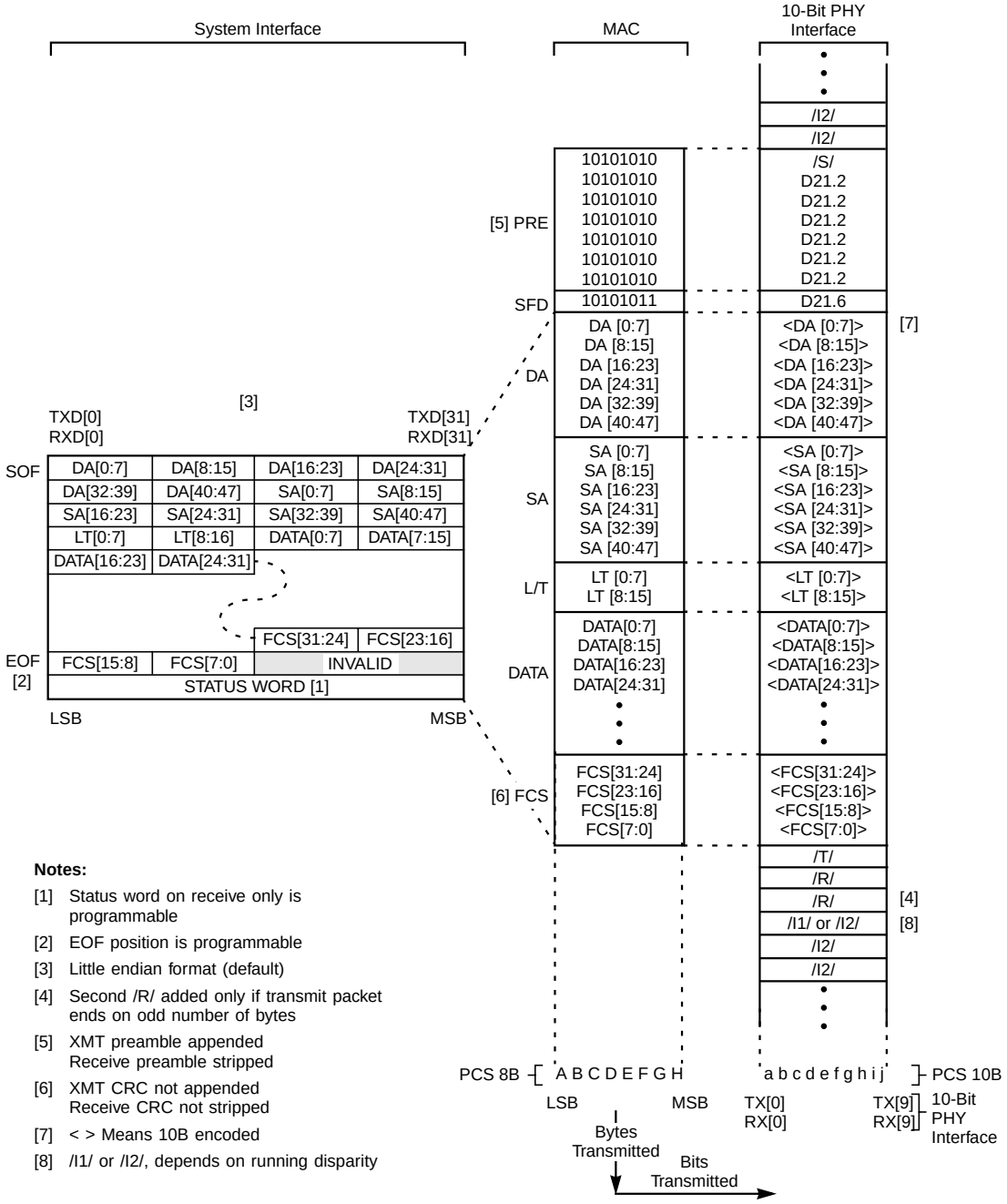

Notes:

[1] Status word on receive only is programmable

[2] EOF position is programmable

[3] Little endian format (default)

[4] Second /R/ added only if transmit packet ends on odd number of bytes

[5] XMT preamble appended
Receive preamble stripped

[6] XMT CRC not appended
Receive CRC not stripped

[7] < > Means 10B encoded

[8] /I1/ or /I2/, depends on running disparity

Copyright © 2000–2001 by LSI Logic Corporation. All rights reserved.

2.3 Receive Data Path

The 10-bit PHY interface receives incoming encoded data from an external PHY device. The incoming encoded data must be encoded in the 10-bit PHY format specified in IEEE 802.3z, as shown in Figure 2.3. The incoming encoded data is then sent to the receive 8B10B PCS block, which strips off the framing delimiters, decodes the data, and converts the encoded data into an Ethernet packet according to the IEEE 802.3 specifications, as shown in Figure 2.2. The Ethernet packet data is then sent to the receive MAC section.

The receive MAC section disassembles the packet, checks the validity of the packet against certain error criteria and address filters, and checks for MAC control frames. The receive MAC then sends valid packets to the receive FIFO. The receive FIFO provides temporary storage of data until it is demanded by the system interface. The system interface outputs the data to an external bus.

2.4 Register Structure

The controller has 136 internal 16-bit registers. 22 registers are available for setting configuration inputs and reading status outputs. The remaining 114 registers are associated with the management counters.

The register interface is a separate internal register bidirectional 16 bit data bus to set configuration inputs, read status outputs, and access management counters.

The location of all registers is described in the Register Addressing Table in Section 4.2, “Register Addresses”. The description of each bit for each register is described in Section 4.3.1 through Section 4.3.25.

2.5 Ethernet Frame Format

Information in an Ethernet network is transmitted and received in packets or frames. The basic function of the controller is to process Ethernet frames. An Ethernet frame is defined in IEEE 802.3 and consists of a preamble, start of frame delimiter (SFD), destination address (DA),

Copyright © 2000–2001 by LSI Logic Corporation. All rights reserved.

source address (SA), length/type field (L/T), data, frame check sequence (FCS), and interpacket gap (IPG). The format for the Ethernet frame is shown in Figure 2.2.

An Ethernet frame is specified by IEEE 802.3 to have a minimum length of 64 bytes and a maximum length of 1518 bytes, exclusive of the preamble and SFD. Packets that are less than 64 bytes or greater than 1518 bytes are referred to as undersize and oversize packets, respectively.

2.5.1 Preamble and SFD

The preamble and SFD is a combined 64-bit field consisting of 62 alternating ones and zeros followed by a 0b11 end of preamble indicator. The first 56-bits of ones and zeros are considered to be the preamble, and the last 8 bits (0b10101011) are considered to be the SFD.

2.5.2 Destination Address

The destination address is a 48-bit field containing the address of the station(s) to which the frame is directed. The format of the address field is the same as defined in IEEE 802.3 and shown in Figure 2.2 b. The destination address can be either a unicast address to a specific station, a multicast address to a group of stations, or a broadcast address to all stations. The first and second bits determine whether an address is unicast, multicast or broadcast, and the remaining 46 bits are the actual address bits, as shown in Figure 2.2 b.

2.5.3 Source Address

The source address is a 48-bit field containing the specific station address from which the frame originated. The format of the address field is the same as defined in IEEE 802.3 and shown in Figure 2.2 b.

2.5.4 Length/Type Field

The 16-bit length/type field takes on the meaning of either packet length or packet type, depending on its numeric value, as described in Table 2.1.

Copyright © 2000–2001 by LSI Logic Corporation. All rights reserved.

Table 2.1 Length/Type Field Definition

Length/Type Field Value (Decimal)	Length or Type	Definition
0–1500	Length	Total number of bytes in data field minus any padding
1501–1517	Neither	Undefined
≥ 1518	Type	Frame type

2.5.5 Data

The data is a 46–1500 byte field containing the actual data to be transmitted between two stations. If the actual data is less than 46 bytes, extra zeros are added to increase the data field to the 46 byte minimum size. Adding these extra zeros is referred to as padding.

2.5.6 Frame Check Sequence (FCS)

The FCS is a 32-bit cyclic redundancy check (CRC) value computed on the entire frame, exclusive of preamble and SFD. The FCS algorithm is defined in IEEE 802.3. The FCS is appended to the end of the frame and determines frame validity.

2.5.7 Interpacket Gap (IPG)

The IPG is the time interval between packets. The minimum IPG value is 96 bits, where 1 bit = 1 ns for Gigabit Ethernet. There is no maximum IPG limit.

2.6 System Interface

The system interface is a 64-bit wide data interface consisting of separate 32-bit data busses for transmit and receive.

2.6.1 Data Format and Bit Order

The format of the data word on TXD[31:0] and RXD[31:0] and its relationship to the MAC frame format and 10-bit PHY interface format is

Copyright © 2000–2001 by LSI Logic Corporation. All rights reserved.

shown in Figure 2.3. Note that the controller can be programmed to append an additional 32-bit status word to the end of the receive packet. Refer to Section 2.14, “Receive Status Word,” for more details on this status word.

To program the byte ordering of the TXD and RXD data bits, set the endian bit in “Register 10–Configuration 4," Section 4.3.11. The byte order shown in Figure 2.4 is with the little endian format mode (default). If the controller is placed in big endian format, the byte order shown in Figure 2.4 is reversed, DA[0:7] occurs on pins RXD[24:31], DA[24:31] occurs on pins RXD[0:7]and so on. The endian bit affects all bytes in the frame including the receive status word (if appended). The difference between little endian and big endian format is illustrated in Figure 2.4.

Figure 2.4 Little Endian vs. Big Endian Format

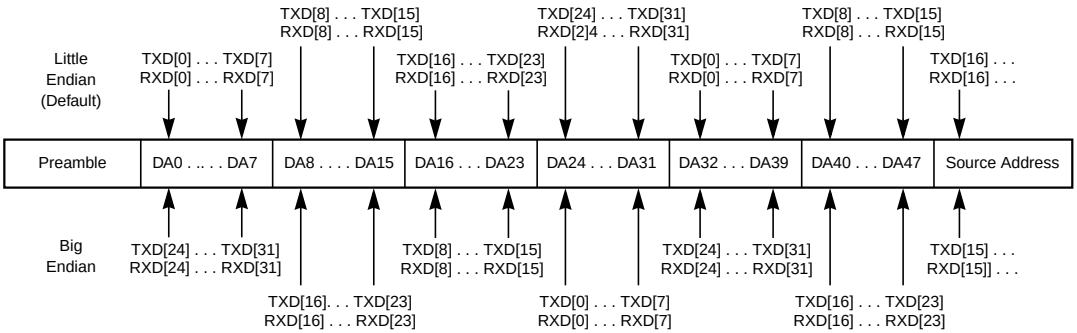

2.6.2 Transmit Timing

The transmit portion of the system interface consists of 45 signals: 32 transmit data input bits (TXD[31:0]), one transmit enable (TXENn), four transmit byte enable inputs (TXBE[3:0]), two transmit start of frame and end of frame inputs (TXSOF and TXEOF), two transmit FIFO watermark outputs (TXWM1n and TXWM2n), one transmit discard output (TXDC), one transmit discard clear input (CLR_TXDC), one transmit CRC enable input (TXCRCn), and one flow control enable input (FCNTRL). All receive and transmit data is clocked in and out on the rising edge of the system clock, SCLK. SCLK must operate between 33–66 MHz.

The SCLK input needs to be continuously input to the controller at 33–66 MHz. When TXENn is deasserted, the transmit interface is not selected and subsequently, the controller accepts no input data from the

Copyright © 2000–2001 by LSI Logic Corporation. All rights reserved.

transmit system interface inputs. When TXENn is asserted, a data word on the TXD[31:0] input is clocked into the transmit FIFO on each rising edge of the SCLK clock input. Multiple packets may be clocked in on one TXENn assertion. The TXD[31:0] input data is a 32-bit wide packet data whose format and relationship to the MAC packet and 10-bit PHY data is described in Figure 2.3.

The TXBE[3:0] pins determine which bytes of the 32-bit TXD[31:0] data word contain valid data. TXBE[3:0] are clocked in on the rising edge of SCLK along with each TXD[31:0] data word. The correspondence between the byte enable inputs and the valid bytes of each data word on TXD[31:0] is defined in Table 2.2. Any logic combination of TXBE[3:0] inputs is allowed, with the one exception that TXBE[3:0] must not be 0b0000 on the SCLK cycle when TXSOF or TXEOF is asserted.

Table 2.2 Byte Enable Pin vs. Valid Byte Position

TXBE[3:0]/RXBE[3:0] Byte Enable Pins	Valid Bytes on TXD[31:0]/RXD[31:0] Pins
TXBE[3]/RXBE[3] Asserted	TXD[31:24]/RXD[31:24]
TXBE[2]/RXBE[2] Asserted	TXD[23:16]/RXD[23:16]
TXBE[1]/RXBE[1] Asserted	TXD[15:8]/RXD[15:8]
TXBE[0]/RXBE[0] Asserted	TXD[7:0]/RXD[7:0]

The TXSOF and TXEOF signals indicate to the controller which data words start and end the Ethernet data packet, respectively. These signals are input on the same SCLK rising edge as the first and last word of the data packet.

The TXWM1n and TXWM2n signals indicate when the transmit FIFO has exceeded the programmable watermark thresholds. The controller asserts the watermarks on the rising edge of SCLK, depending on the fullness of the transmit FIFO. Refer to Section 2.9, “Transmit FIFO,” for more details on these watermarks.

Copyright © 2000–2001 by LSI Logic Corporation. All rights reserved.

TXDC is a transmit packet discard output. TXDC is asserted every time the transmission of the packet being input on the system interface was halted and the packet discarded due to some error. This signal is latched HIGH. It is cleared when the clearing signal, CLR_TXDC, is asserted or cleared automatically if the controller is placed in the AutoClear mode. See Section 2.13, “Packet Discard,” for more details on discards and TXDC.

TXCRCn is an input that can enable the internal generation and appending of the 4-byte CRC value onto the end of the data packet. TXCRCn is sampled on the rising edge of SCLK and has to be asserted at the beginning of the packet, coincident with TXSOF, to remove or add the CRC to that packet. Setting the transmit CRC enable bit (TXCRC) in the Configuration 1 register also enables CRC generation. Refer to Section 2.7.3, “CRC Generation” for more details on CRC generation and the interaction between TXCRCn and the TXCRC bit.

FCNTRL is an input that causes the automatic generation and transmission of a MAC control pause frame. FCNTRL is input on the rising edge of SCLK. See Section 2.17, “MAC Control Frames,” for more details about this feature.

2.6.3 Receive Timing

The receive portion of the system interface consists of 45 signals:

- 32 receive output data bits (RXD[31:0])
- One receive enable input (RXENn)
- Four receive byte enable outputs (RXBE[3:0])
- One receive start of frame and one end of frame outputs (RXSOF and RXEOF)
- Two receive FIFO watermark outputs (RXWM1 and RXWM2)
- One receive discard output (RXDC)
- One receive discard clear input (CLR_RXDC)
- One receive packet abort input (RXABORT)
- One receive output enable (RXOEn)

All receive and transmit data is clocked in and out with the system clock, SCLK, which must operate between 33–66 MHz.

Copyright © 2000–2001 by LSI Logic Corporation. All rights reserved.

The SCLK input must continuously operate at 33–66 MHz. When RXENn is deasserted, the receive interface is not selected and, subsequently, no data from the receive FIFO can be output over the system interface. If the receive watermarks RXWM1 and RXWM2 are asserted while RXENn is deasserted, the next data word from the receive FIFO appears on the RXD[31:0] outputs until RXENn is asserted. When RXENn is asserted, a data word from the receive FIFO is clocked out onto the RXD[31:0] outputs after each rising edge of the SCLK input. After the entire packet has been clocked out, no more data is clocked out on RXD[31:0] until RXENn is deasserted and reasserted, which allows extra dribble SCLK clock cycles to occur after the end of the packet. RXD[31:0] output data is a 32-bit wide packet data whose format and relationship to the MAC packet and 10-bit PHY data is described in Figure 2.3.

The RXBE[3:0] signals determine which bytes of the 32-bit RXD[31:0] data word contain valid data. RXBE[3:0] are clocked out on the rising edge of SCLK along with each RXD[31:0] data word. Note that RXBE[3:0] = 0b1111 for all words of the packet except the last word, which may end on any one of the 4-byte boundaries of the 32-bit data word. The correspondence between the byte enable inputs and the valid data bytes of each data word on RXD[31:0] is defined in Table 2.2.

The RXSOF and RXEOF signals indicate which words start and end the Ethernet data packet, respectively. These signals are generally clocked out on the same SCLK rising edge as the first and last word of the data packet, respectively. However, their exact position relative to the data packet is dependent on the programming of the PEOF bit and STSWRD[1:0] bits in Register 7, “Configuration 1”. The exact RXSOF and RXEOF position for combinations of these two bits is shown in Figure 2.5. More details about the definition of these bits can be found in “Register 7–Configuration 1," Section 4.3.8, and more details about the status word can be found in Section 2.14, “Receive Status Word,”.

Copyright © 2000–2001 by LSI Logic Corporation. All rights reserved.

Figure 2.5 RXSOF/RXEOF Position

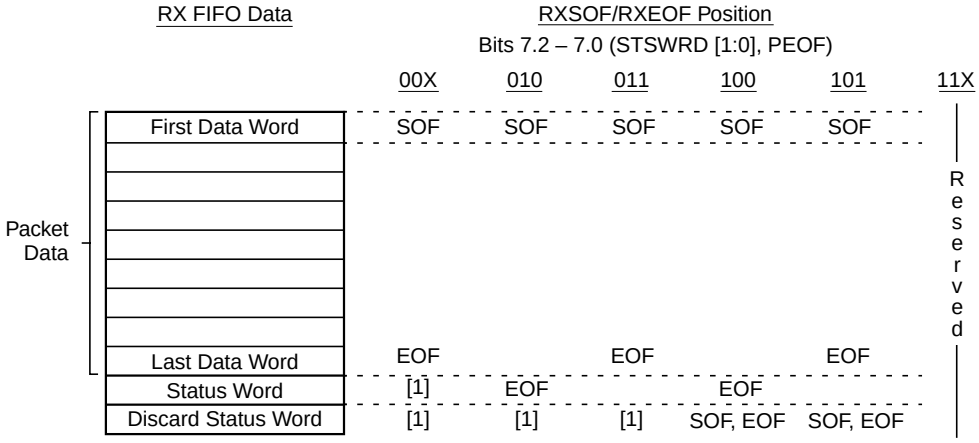

Note:
[1] Status words do not exist with this bit combination

The RXWM1 and RXWM2 signals indicate when the receive FIFO has exceeded the programmable watermark thresholds. The watermarks are asserted or deasserted on the rising edge of SCLK, depending on the fullness of the receive FIFO. Refer to Section 2.10, “Receive FIFO,” for more details on these watermarks.

RXDC is asserted every time a received packet being output over the system interface is halted and the packet discarded due to some error. This signal is latched HIGH and can be cleared by either asserting the clearing signal, CLR_RXDC, or cleared automatically if the controller is placed in the AutoClear mode. See Section 2.13, “Packet Discard,” section for more details on discards and RXDC.

The RXABORT input, when asserted, discards the current packet being output on the system interface. When RXABORT is asserted, a packet is discarded and the remaining contents of that packet in the receive FIFO are flushed. The process of flushing a receive packet from the receive FIFO with the RXABORT pin requires extra SCLK cycles equal to (packet length in bytes)/8 + 6. Refer to Section 2.13, “Packet Discard,” for more information about discarded packets. Clearing the discard RXABORT enable bit in “Register 8–Configuration 2," Section 4.3.9, programs the controller to ignore the RXABORT signal. Setting the

Copyright © 2000–2001 by LSI Logic Corporation. All rights reserved.

RXABORT definition bit in "Register 9–Configuration 3," Section 4.3.10, also programs the controller to discard either the data packet and its status word or just the data packet exclusive of the status word.

The RXOEn signal, when asserted, places certain receive outputs in the high-impedance state. RXOEn affects the RXD[31:0], RXBE[3:0], RXSOF, and RXEOF output pins.

2.6.4 Bus Width

Setting the BUSSIZE bit in "Register 10–Configuration 4," Section 4.3.11, changes the receive word width from 32-bits to 16-bits. When the bus width is configured to 16-bits, the receive system interface data outputs appear on RXD[15:0] and the data words are now 16-bits wide instead of 32-bits wide.

Note: The transmit word width can be adjusted by appropriately setting the transmit byte enable inputs, TXBE[3:0], as described in Table 2.2.

2.6.5 System Interface Disable

To disable the system interface, set the SINTF_DIS bit in "Register 9–Configuration 3," Section 4.3.10. When the system interface is disabled, the controller:

- Places all system interface outputs in the high-impedance state (TXWMn[1:2], TXDC, RXD[31:0], RXBE[3:0], RXSOF, RXEOF, RXWM1/2, RXDC)
- Ignores all inputs (SCLK, TXENn, TXD[31:0], TXBE[3:0], TXSOF, TXEOF, CLR_TXDC, FCNTRL, TXCRCn, RXENn, RXOEn, CLR_RXDC, RXABORT)
- Transmits /C/ (see Table 2.8) ordered sets with the remote fault bits RF[1:0] = 0b10 over the 10-bit PHY interface outputs

Copyright © 2000–2001 by LSI Logic Corporation. All rights reserved.

2.7 Transmit MAC

To generate an Ethernet MAC frame from the transmit FIFO, the transmit MAC section:

- Generates preamble and SFD
- Pads undersize packets with zeros to meet minimum packet size requirements
- Calculates and appends a CRC value to the packet
- Maintains a minimum interpacket gap

Each of the above four operations can be individually disabled and altered if desired. The transmit MAC then sends the fully formed Ethernet packet to the 8B10B PCS block for encoding. The transmit MAC section also generates MAC control frames.

2.7.1 Preamble and SFD Generation

The transmit MAC normally appends the preamble and SFD to the packet. To program the controller to not append the preamble and SFD to the transmit packet, clear the TXPRMBL bit in “Register 7–Configuration 1," Section 4.3.8.

2.7.2 AutoPad

The transmit MAC normally AutoPads packets. AutoPadding is the process of automatically adding enough zeroes in packets with data fields less than 46 bytes to make the data field exactly 46 bytes in length which meets the 46-byte minimum data field requirement of IEEE 802.3. To program the controller to not AutoPad, clear the APAD bit in “Register 7–Configuration 1," Section 4.3.8.

2.7.3 CRC Generation

The transmit MAC normally appends the CRC value to the packet. To program the controller to not append the CRC value to the end of the packet from the transmit FIFO, assert the TXCRCn pin or clear the TXCRC bit in Register 7 “Configuration 1”, as described in Table 2.3 and as described in “Register 7–Configuration 1," Section 4.3.8.

Copyright © 2000–2001 by LSI Logic Corporation. All rights reserved.

Table 2.3 TXRC Bit and TXCRCn Pin Logic

TXCRC Bit[1]	TXCRCn[2] Pin	CRC Appended to End of Packet?
1	1	Yes
1	0	Yes
0	1	No
0	0	Yes

1. 1 = Append, 0 = No append
2. 1 = No append, 0 = Append

2.7.4 Interpacket Gap

If packets from the transmit FIFO arrive at the transmit MAC sooner than the minimum IPG time the transmit MAC adds enough time between packets to equal the minimum IPG value. The default IPG time is set to 96 bits (1 bit = 1 ns).To program other values, set the transmit IPG select bits IPG[2:0] in "Register 7–Configuration 1," Section 4.3.8, as summarized in Table 2.4.

Table 2.4 Transmit IPG Selection

IPG[2:0] Bits	IPG Value (ns)	Comments
111	96	IEEE minimum specification
110	112	
101	80	
100	64	
011	192	2 × IEEE minimum specification
010	384	4 × IEEE minimum specification
001	768	8 × IEEE minimum specification
000	32	

Copyright © 2000–2001 by LSI Logic Corporation. All rights reserved.

2.7.5 MAC Control Frame Generation

The transmit MAC can automatically generate and transmit MAC control pause frames, which are used for flow control. This function is described in more detail in Section 2.17, “MAC Control Frames”.

2.8 Receive MAC

The receive MAC section performs the following operations to disassemble Ethernet packets received from the receive 8B10B PCS section:

- Strips off the preamble and SFD
- Strips off the CRC
- Checks the destination address against the address filters to determine packet validity
- Checks frame validity against the discard conditions
- Checks the length/type field for MAC control frames

Each of the above operations can be individually disabled and altered, if desired. The receive MAC then sends valid packets to the receive FIFO for storage.

2.8.1 Preamble and SFD Stripping

The transmit MAC normally strips the preamble and SFD from the receive packet. To program the controller to not strip the preamble and SFD set the RXPRMBL bit in “Register 7–Configuration 1," Section 4.3.8. When this bit is set, the preamble and SFD are left in the receive packet and are stored in the receive FIFO as a part of the packet.

2.8.2 CRC Stripping

The receive MAC normally strips the FCS from the receive packet. To program the controller to not strip the FCS field, set the RXCRC bit in “Register 7–Configuration 1," Section 4.3.8. When this bit is set the last four bytes of the packet containing the CRC value are left in the receive packet and are stored in the receive FIFO as part of the packet.

Copyright © 2000–2001 by LSI Logic Corporation. All rights reserved.

2.8.3 Unicast Address Filter

Comparing the destination address of the receive packet against the 48-bit value stored in the three MAC Address registers (registers 0, 1 and 2) filters unicast packets. When the destination address of a unicast packet matches the value stored in these registers the unicast packet is deemed valid and passed to the receive FIFO; otherwise, the packet is rejected. The correspondence between the bits in the MAC Address registers and the incoming bits in the destination address of the receive packet is defined in the MAC Address register definitions.

To program the controller to always reject unicast packets, set the REJUCST bit in "Register 8–Configuration 2," Section 4.3.9. When this bit is set all unicast packets are rejected regardless of their address.

Unicast packet address filtering functions do not affect the reception of MAC control frames. Other bits described in Section 2.17, "MAC Control Frames," control the reception of MAC control frames.

2.8.4 Multicast Address Filter

The multicast address filter function computes the CRC on the incoming Destination Address and produces a 6-bit number that is compared against the 64 values stored in the MAC Address Filter 1–4 registers (Registers 3, 4, 5, and 6). When the multicast packet destination address passes the address filter, the packet is deemed valid and passed to the receive FIFO; otherwise, the packet is rejected.

The multicast address filter requires 64 address filter bits to be written into the Address Filter 1–4 registers. The multicast address filtering algorithm is as follows:

1. Compute a separate 32-bit CRC on the destination address field using the same IEEE 802.3 defined method that computes the transmit CRC.
2. Use bits [0:2] of the destination address FCS to select one of the bytes in the 64-bit address filter, as shown in Table 2.5.
3. Use bits [3:5] of the destination address FCS to select one of the bits within the byte selected in (2), as shown in Table 2.5.

Copyright © 2000–2001 by LSI Logic Corporation. All rights reserved.

4. If the bit selected in (3) is a "one" the destination address passes the filter; otherwise, the address fails the filter and the packet is rejected and discarded.

   Note: If all 64 bits of the address filter are programmed to all ones, the address filter passes all multicast addresses.

Table 2.5 Multicast Address Filter Map

FCS Bits [0:2][1]	Address Filter Byte[2]	FCS Bits [3:5][1]	Address Filter Bit[3]
000	F0[7:0]	000	Fx[0]
001	F1[7:0]	001	Fx[1]
010	F2[7:0]	010	Fx[2]
011	F3[7:0]	011	Fx[3]
100	F4[7:0]	100	Fx[4]
101	F5[7:0]	101	Fx[5]
110	F6[7:0]	110	Fx[6]
111	F7[7:0]	111	Fx[7]

1. Bits 0–5 are the six least-significant bits of the CRC.
2. F[7:0] are bytes in Address Filter 1–4 Registers.
3. Fx[7:0] are bits within each byte in Address Filter 1–4 Registers.

Setting the REJMCST bit in "Register 8–Configuration 2," Section 4.3.9, programs the controller to reject all multicast packets regardless of their address. When this bit is set all multicast packets are rejected regardless of their address.

Multicast packet address filtering functions do not affect the reception of MAC control frames. Other bits described in Section 2.17, "MAC Control Frames," control the reception of MAC control frames.

2.8.5 Broadcast Address Filter

The controller does not do any filtering on broadcast packets. To program the controller to reject all broadcast packets, set the REJBCST bit in "Register 8–Configuration 2," Section 4.3.9. When this bit is set all broadcast packets are rejected regardless of their address.

Copyright © 2000–2001 by LSI Logic Corporation. All rights reserved.

Broadcast address filtering functions do not affect the reception of MAC control frames. Other bits described in Section 2.17, “MAC Control Frames,” control the reception of MAC control frames.

2.8.6 Reject or Accept All Packets

Setting the ACPTAL or REJALL bits in “Register 8–Configuration 2," Section 4.3.9, programs the controller to accept or reject all packets regardless of type or whether the packet passes the address filter.

These bits do not affect the reception of MAC control frames. Other bits described in Section 2.17, “MAC Control Frames,” control the reception of MAC control frames.

2.8.7 Frame Validity Checks

The receive MAC checks the following to determine the validity of each receive packet:

- Valid FCS
- Oversize packet
- Undersize packet

Computing the CRC value on the incoming receive packet according to IEEE 802.3 specifications and comparing it against the actual CRC value in the FCS field of the received packet determines the validity of the FCS. If the values are not the same, the frame is determined to be invalid and the packet is discarded. Refer to Section 2.13, “Packet Discard” for more information about discards. Clearing the DIS_CRC error bit in “Register 8–Configuration 2," Section 4.3.9, programs the controller not to discard a packet with a bad FCS.

Oversize packets are packets whose length is greater than the maximum packet size. If a received packet is an oversize packet, then the packet is determined to be invalid and is discarded. Refer to Section 2.13, “Packet Discard” for more information about discards. Clearing the DIS_OSIZE bit in “Register 8–Configuration 2," Section 4.3.9, programs the controller not to discard an oversize packet and allow packets of unlimited length.

Copyright © 2000–2001 by LSI Logic Corporation. All rights reserved.

Undersize packets are packets whose length is less than the minimum packet size. Minimum packet size is defined to be 64 bytes, exclusive of preamble and SFD. If a received packet is an undersize packet, the frame is determined to be invalid and is discarded. Refer to Section 2.13, “Packet Discard” for more information about discards. Clearing the DIS_USIZE bit in “Register 8–Configuration 2," Section 4.3.9, programs the controller not to discard an undersize packet.

2.8.8 Maximum Packet Size

The maximum packet size used for receive MAC frame validity checking is programmed to be one of four values, 1518, 1522, 1535 or unlimited bytes. Setting the RMXPKT[1:0] receive MAC maximum packet size select bits in “Register 9–Configuration 3," Section 4.3.10, and the DIS_OSIZE bit in “Register 8–Configuration 2," Section 4.3.9, as shown in Table 2.6. programs the controller to discard packets that exceed the maximum packet size selected. This selection is also described in the register descriptions for those registers.

The bits shown in Table 2.6 affect the receive MAC section only; the maximum packet size for the management counters is described in Section 2.19, “Counters”.

Table 2.6 Receive Maximum Packet Size Selection

Register 8 DIS_OSIZE Bit	Register 9 RMXPKT [1:0] Bits	Maximum Packet Size (Bytes)
0b0	xx[1]	unlimited
0b1	0b10	1535
0b1	0b01	1522
0b1	0b00	1518

1. xx = Don’t Care

2.8.9 MAC Control Frame Check

The length/type field is checked to detect whether the packet is a valid MAC control frame. Refer to Section 2.17, “MAC Control Frames” for more details on MAC control frames.

Copyright © 2000–2001 by LSI Logic Corporation. All rights reserved.

2.9 Transmit FIFO

The transmit FIFO acts as a temporary buffer between the system interface and transmit MAC section. The transmit FIFO size is 4 Kbytes. Data is clocked into the transmit FIFO with the 33–66 MHz system interface clock, SCLK. Data is automatically clocked out of the transmit FIFO with the 125 MHz 8B10B PCS clock whenever a full packet has been loaded into the FIFO (an EOF is written into the FIFO on the system interface), or the FIFO data exceeds the transmit FIFO AutoSend threshold. There are two programmable watermark outputs, TXWM1n and TXWM2n, which aid in managing the data flow into the transmit FIFO.

2.9.1 AutoSend

The AutoSend feature causes a packet in the transmit FIFO to be automatically transmitted when data in the transmit FIFO exceeds a certain threshold.

The transmit AutoSend threshold is programmable over the lower 2 Kbytes of the transmit FIFO. The AutoSend threshold can be programmed with the six TASND[5:0] bits that reside in the Transmit FIFO Threshold register. Whenever the data in the FIFO exceeds this threshold, the packet is automatically transmitted to the 8B10B PCS section and out the 10-bit PHY interface. A packet is also automatically transmitted if an EOF is written into the transmit FIFO for that packet, regardless of the AutoSend threshold setting.

All of the bit settings for the transmit AutoSend threshold are evenly distributed over the lower half of the transmit FIFO range, except for the 0b000000 setting. The 0b000000 setting automatically starts transmission when the transmit FIFO is full, thus facilitating the transmission of oversize packets. Refer to “Register 17–Transmit FIFO Threshold," Section 4.3.14, description for more details on the AutoSend (TASND[5:0]) bit settings.

2.9.2 Watermarks

There are two transmit watermarks for the transmit FIFO which are output on the TXWM1n and TXWM2n pins. These watermarks are asserted when the transmit FIFO data exceeds the thresholds associated with the watermarks.

Copyright © 2000–2001 by LSI Logic Corporation. All rights reserved.

The transmit watermark thresholds for TXWM1n and TXWM2n can be programmed over the entire 4 Kbyte FIFO range. Each of the watermark thresholds is independently programmed with five bits that reside in the Transmit FIFO Threshold register. Whenever the data in the FIFO exceeds the threshold of either watermark, the respective watermark pin on TXWM1n or TXWM2n is asserted LOW. The watermark signals stay asserted until the data in the FIFO goes below the respective thresholds.

2.9.3 TX Underflow

The transmit FIFO underflow condition occurs when the TX FIFO is empty but the MAC is still requesting data to complete the transmission of a packet. If the transmit FIFO underflows:

- Packet transmission to the 8B10B PCS is halted
- A /V/ code (see Table 2.8) is appended to the end of the partially transmitted packet
- Any new data for the partially transmitted packet is discarded

Refer to Section 2.13, “Packet Discard” for more information about discards.

2.9.4 TX Overflow

The transmit FIFO overflow condition occurs when the TX FIFO is full but additional data is still being written into it from the system interface. If the transmit FIFO overflows:

- The input to the TX FIFO is blocked and does not accept any more data from the system interface until the TX FIFO space is freed up
- The data already stored in the TX FIFO for the partially loaded last packet is transmitted with a /V/ code (see Table 2.8) appended to the end of the packet to indicate an error
- Any new data for the partially loaded last packet is discarded

Refer to Section 2.13, “Packet Discard” for more information about discards.

Copyright © 2000–2001 by LSI Logic Corporation. All rights reserved.

2.9.5 Link Down FIFO Flush

When the link is down (also referred to as link fail) and defined by either receiver has lost sync or AutoNegotiation process has not yet completed, the transmitter at the 10-bit PHY interface is occupied with sending either idle or AutoNegotiation codes (/I/ or /C/ see Table 2.8). As a result, data cannot exit the transmit FIFO to the transmit MAC section. If data continues to be input to the transmit FIFO from the system interface while the controller is in the link fail mode the transmit FIFO may overflow. Enabling the link down FIFO flush feature causes the data exiting the transmit FIFO to be automatically discarded when the controller is in the link fail mode, thus preventing any possible overflow of the transmit FIFO. Setting the Link Down FIFO Flush Enable bit (LNKDN) in "Register 10–Configuration 4," Section 4.3.11, enables the link down FIFO flush mode.

2.10 Receive FIFO

The receive FIFO acts as a temporary buffer between the receive MAC section and system interface. The receive FIFO size is 16 Kbytes. Data is clocked into the receive FIFO with the 125 MHz 8B10B PCS clock. Data is clocked out of the receive FIFO with the 33–66 MHz system interface clock, SCLK. There are two programmable watermark outputs, RXWM1 and RXWM2, which aid in managing the data flow out of the receive FIFO.

2.10.1 Watermarks

There are two watermarks for the receive FIFO. which are output on the RXWM1 and RXWM2 pins. These watermarks are asserted when the receive FIFO data exceeds the thresholds associated with the watermarks.

The receive watermark thresholds for RXWM1 and RXWM2 can be programmed over the entire 16 Kbyte receive FIFO range. Each of the watermark thresholds is independently programmed with eight bits that reside in the Receive FIFO Threshold register. Whenever the data in the FIFO exceeds the threshold of either watermark, the respective watermark pin on either RXWM1 or RXWM2 is asserted HIGH. RXWM2 is also asserted if a complete packet is loaded into the receive FIFO from

Copyright © 2000–2001 by LSI Logic Corporation. All rights reserved.

the 8B10B PCS section. The watermarks stay asserted until the data in the FIFO goes below the respective thresholds, and RXWM2 also stays asserted until all end of packets (EOF) have been read out of the receive FIFO. After the EOFs have been read out of the receive FIFO, the watermarks cannot go active again until RXENn is deasserted.

2.10.2 RX Overflow

The receive FIFO overflow condition occurs when the receive RX FIFO is full and additional data is still being written into it from the MAC. If the receive FIFO overflows:

- The input to the RX FIFO is blocked and does not accept any more data from the 8B10B PCS until RX FIFO space is freed up
- The data already stored in the RX FIFO for the partially loaded last packet is normally discarded
- Any new data for the partially loaded last packet is also normally discarded

Refer to Section 2.13, “Packet Discard” for more information about discards. Clearing the DIS_OVF bit in “Register 8–Configuration 2," Section 4.3.9, programs the controller to not discard a packet corrupted by overflow.

2.10.3 RX Underflow

The receive FIFO underflow condition occurs when the system interface is attempting to read data out of the RX FIFO when it is empty. If the RX FIFO underflows, any data read out of the RX FIFO while the underflow condition persists is invalid, and any new data for the partially loaded last packet is stored in the RX FIFO and is not discarded.

2.11 8B10B PCS

The 8B10B PCS has a transmit section and a receive section.

The transmit 8B10B PCS section accepts Ethernet formatted packet data from the transmit MAC and:

- Encodes the data with the 8B10B encoder
- Adds the start of packet delimiter

Copyright © 2000–2001 by LSI Logic Corporation. All rights reserved.

- Adds the end of packet delimiter
- Adds the idle code stream
- Formats the packet according to the 10B PHY format defined in IEEE 802.3z and shown in Figure 2.3

The 8B10B encoded data stream is then sent to the transmit 10-bit PHY interface for transmission.

The transmit 8B10B PCS section also generates the AutoNegotiation code stream when the controller is in the AutoNegotiation process.

The receive 8B10B PCS section takes the 8B10B encoded packet data from the incoming 10-bit PHY interface and:

- Acquires and maintains word synchronization
- Strips off the start of packet delimiter
- Strips off the end of packet delimiter
- Strips off the idle code stream
- Decodes the data with the 8B10B decoder
- Converts the packet to the Ethernet packet format shown in Figure 2.2

The Ethernet packet is then sent to the receive MAC for processing.

The receive 8B10B PCS section also decodes the AutoNegotiation code stream when the controller is in the AutoNegotiation process.

2.11.1 8B10B Encoder

The 8B10B encoder converts each data byte of a packet into a unique 10-bit word as defined in IEEE 802.3z and shown in Table 2.7 (in abbreviated form).

Copyright © 2000–2001 by LSI Logic Corporation. All rights reserved.

Table 2.7 8B10B Coding Table

8B Bytes		10B Codes	
Data Byte Name	**Bits HGFEDCBA**	**CurrentRD– abcdei fghj**	**CurrentRD+ abcdei fghj**
D0.0	000 00000	100111 0100	011000 1011
D1.0	000 00001	011101 0100	100010 1011
D2.0	000 00010	101101 0100	010010 1011
D3.0	000 00011	110001 1011	110001 0100
. . .	. . .	. . .	. . .
D28.7	111 11100	001110 1110	001110 0001
D29.7	111 11101	101110 0001	010001 1110
D30.7	111 11110	011110 0001	100001 1110
D31.7	111 11111	101011 0001	010100 1110

The encoder also converts the start of packet delimiter, end of packet delimiter, idle code streams, and AutoNegotiation code streams into unique 10B code words. These unique 10B code words are referred to as ordered sets. Table 2.8 describes the ordered sets defined and used by IEEE 802.3z.

The 8B10B encoder also keeps the running disparity of the outgoing 10B word as close as possible to zero. Running disparity is the difference between the number of ones and zeros transmitted on the outgoing bit stream. The algorithm for calculating running disparity is defined in 802.3z. After each 10B word is transmitted, the running disparity is recalculated. If the current running disparity is negative, the next 10B word is chosen from the "Current RD–" column in Table 2.7 (in abbreviated form). If the current running disparity is positive, the next 10B word is chosen from the "Current RD+" column in Table 2.7.

Copyright © 2000–2001 by LSI Logic Corporation. All rights reserved.

2.11.2 8B10B Decoder

The 8B10B decoder performs the reverse process of the 8B10B encoder. The 8B10B decoder converts each 10-bit word back into an 8-bit byte using the code conversion tables defined in IEEE 802.3z and shown in Table 2.7 (in abbreviated form) and Table 2.8. The 8B10B decoder also checks the running disparity of the incoming 10B word to insure that it is correct.

A PCS codeword error results if the 8B10B decoder detects any of the following:

- A 10B word that is not valid (does not appear in Table 2.7)
- An ordered set that is not valid (does not appear in Table 2.8)
- An error in the running disparity

Packets with PCS codeword errors are normally discarded. Refer to Section 2.13, “Packet Discard” for more details on discards. Clearing the DIS_CWRD bit in “Register 8–Configuration 2," Section 4.3.9, programs the controller to not discard a packet with PCS codeword errors.

Table 2.8 10B Defined Ordered Sets

10B Code Symbol	Description	10B Codes	Begin RD	End RD
/C1/	Link Configuration 1	/K28.5/[1] /D21.5/ config_word1 config_word2	+ or -	flip[2]
/C2/	Link Configuration 2	/K28.5/[1] /D2.2/ config_word1 config_word2	+ or –	same[2]
/C/	Link Configuration	Alternating /C1/ & /C2/	–	–
/I1/	Idle 1	/K28.5/ /D5.6/	+	–
/I2/	Idle 2	/K28.5/ /D16.2/	–	–
/I/	Idle	/I1/ or /I2/	–	–

Copyright © 2000–2001 by LSI Logic Corporation. All rights reserved.

Table 2.8 10B Defined Ordered Sets (Cont.)

10B Code Symbol	Description	10B Codes	Begin RD	End RD
/S/	Start of packet delimiter (SPD)	/K27.7/	+ or –	same
/T/	End of packet delimiter (EPD)	/K29.7/	+ or –	same
/R/		/K23.7/	+ or –	same
/V/	Error (void)	/K30.7/	+ or –	same

1. config_word 1/2 contain the 16-Bit AutoNegotiation data word. See the AutoNegotiation section for details.
2. RD determined on the /K/ and /D/ characters only, not the config_word.

2.11.3 Start of Packet

A unique start of packet delimiter (SPD) indicates the start of a packet. The SPD consists of a single /S/ code inserted at the beginning of the packet in place of the first preamble octet, as defined in the IEEE 802.3z and shown in Figure 2.3. The /S/ code is defined in Table 2.8.

The transmit 8B10B PCS section inserts an /S/ code at the beginning of each transmit packet in place of the first 10B word of the preamble.

The receive 8B10B PCS section constantly monitors the incoming 10B bitstream. If an /S/ code is detected, the start of packet indication is given to the receive MAC, and a preamble octet is substituted in place of the /S/ code at the beginning of the packet. If the 8B10B PCS receiver detects the transition from the idle pattern (/I/ code stream) to nonidle pattern without an intervening /S/ code, the packet is assumed to have a bad SPD. Packets with a bad SPD are normally discarded as codeword errors.

Refer to Section 2.13, “Packet Discard” for more information about discards. Clearing the DIS_CWRD bit in “Register 8–Configuration 2," Section 4.3.9, programs the controller to not discard packets with PCS codeword errors.

Copyright © 2000–2001 by LSI Logic Corporation. All rights reserved.

2.11.4 End Of Packet

The End of Packet Delimiter, referred to as EPD indicates the end of a packet. The EPD consists of two codes, /T/ and /R/, inserted at the end of the packet, as defined in IEEE 802.3z and shown in Table 2.8, and also shown in Figure 2.3. To maintain synchronization on the proper word boundaries, an outgoing packet must also have an even number of 10-bit words transmitted. If the packet has an odd number of 10-bit words transmitted after the /T/R/ codes, an extra /R/ code is inserted after the /T/R/ (now a /T/R/R/) to meet the even word requirement, as defined in IEEE 802.3z and shown in Figure 2.3.

The transmit 8B10B PCS section appends either the /T/R/ or /T/R/R/ codes to the end of each transmit packet.

The receive 8B10B PCS section constantly monitors the incoming 10B bitstream. If the /T/R/ codes are detected, the end of packet indication is given to the receive MAC, and the /T/R/ or /T/R/R/ codes are stripped from the end of the packet. If the 8B10B PCS receiver detects the transition from the nonidle pattern to an idle pattern (/I/ code stream) without intervening /T/R/ codes, the packet is assumed to have a bad EPD. Packets with a bad EPD are discarded if the controller is so programmed. Refer to Section 2.13, “Packet Discard” for more details on discards. Clearing the DIS_CWRD bit in “Register 8–Configuration 2," Section 4.3.9, programs the controller to not discard packets with PCS errors.

2.11.5 Idle

The interpacket gap time is filled with a continuous stream of codes referred to as the idle pattern. The idle pattern consists of a continuous stream of /I2/ codes, as defined in IEEE 802.3z and shown in Figure 2.3. The running disparity during idle is defined to be negative. So, if the running disparity after the last /R/ code of a packet is positive, a single /I1/ code must be transmitted as the first idle code to make the running disparity negative. All subsequent idle codes must be /I2/, as defined in IEEE 802.3z and shown in Figure 2.3. The /I1/ and /I2/ codes are defined in Table 2.8.

The transmit 8B10B PCS section inserts a continuous stream of /I1/I2/I2/I2/…or /I2/I2/I2/I2/…codes between packets.

Copyright © 2000–2001 by LSI Logic Corporation. All rights reserved.

The receive 8B10B PCS section constantly monitors the incoming 10B bitstream. If an /I2/ or /I1/ code is detected, an end of packet indication is given to the receive MAC and the /I1/ and /I2/ codes are stripped from the packet.

2.11.6 Receive Word Synchronization

In order to correctly decode the incoming encoded data, the 8B10B PCS receiver must identify the word boundaries of the incoming data stream. The process of detecting these word boundaries is referred to as word synchronization. The receiver uses a state machine compatible with the algorithm defined in IEEE 802.3z to acquire and maintain word synchronization. The comma code is used to acquire and maintain receive word synchronization, as specified by IEEE 802.3z. The comma code consists of a unique 7-bit pattern that only appears in the defined ordered sets shown in Table 2.8, and the comma code does not appear in the normal data words or across data word boundaries.

When the 8B10B PCS receiver has lost word synchronization, the EN_CDET pin is asserted to signal the external PHY device. Reading the RSYNC bit in "Register 11–Status 1," Section 4.3.12, also determines word synchronization.

2.11.7 AutoNegotiation

The AutoNegiotation algorithm uses the /C/ ordered sets, as defined in Table 2.8, to configure the link for correct operation. Refer to Section 2.15, "AutoNegotiation" for more details on this process.

2.12 10-Bit PHY Interface

The 10-bit PHY interface is a standardized interface between the 8B10B PCS section and an external physical layer device. The 10-bit PHY interface meets all the requirements outlined in IEEE 802.3z. The controller can directly connect, without any external logic, to any physical layer device that also complies with the IEEE 802.3z 10-bit interface specifications. The 10-bit PHY interface frame format is defined in IEEE 802.3z and shown in Figure 2.3.

Copyright © 2000–2001 by LSI Logic Corporation. All rights reserved.

The 10-bit PHY interface consists of 26 signals as follows:

- Ten bit transmit data output bits (TX[9:0])
- Transmit clock output (TBC)
- Ten bit receive data input bits (RX[9:0])
- Two receive clock inputs (RBC0 and RBC1)
- Comma detect enable output (EN_CDET)
- Loopback output (EWRAP)
- Receiver lock output (LCK_REFn)

2.12.1 Data Format and Bit Order

The format and bit order of the data word on TX[9:0] and RX[9:0] and its relationship to the MAC frame and the system interface data words is shown in Figure 2.3. Note that Figure 2.3 assumes the controller is in Little Endian format (default). If the controller is in Big Endian format, the byte order of the system interface data word is reversed. See Section 2.6, “System Interface” for more details.

2.12.2 Transmit

On the transmit side, the TBC output clock is generated from the TCLK input clock and runs continuously at 125 MHz. Data on TX[9:0] is clocked out of the controller on the rising edge of the TBC clock output.

2.12.3 Receive

On the receive side, RX[9:0] data is clocked in on rising edges of the RBC[1:0] input clocks. RBC1 and RBC0 are required to be at a frequency of 62.5 MHz and be 180° out of phase. The data on RX[9:0] is clocked in at an effective 125 MHz using alternate rising edges of the RBC[1:0] clocks to latch in the data on RX[9:0]. The incoming data on RX[9:0] is also required to be word aligned to the RBC1 clock, (the words that contain comma codes must be clocked in with the RBC1 clock, as specified in IEEE 802.3z).

Copyright © 2000–2001 by LSI Logic Corporation. All rights reserved.

The comma detect output, EN_CDET, is asserted when the receiver in the 8B10B PCS section has lost word synchronization.Setting the CDET bit in "Register 9–Configuration 3," Section 4.3.10, also asserts EN_CDET. The EN_CDET output can be used to enable the bit synchronization process in an external physical layer device.

The controller does not have a pin designated for the standardized comma detect input, COM_DET, because the receive 8B10B PCS section has all the necessary logic to acquire word synchronization from the contents of the receive data stream alone.

2.12.4 Lock To Reference

Setting the LCKREFn bit in "Register 9–Configuration 3," Section 4.3.10, exclusively controls the LCK_REFn output. This output is typically used to enable the PLL locking process in an external physical layer device.

2.12.5 PHY Loopback

Setting the EWRAP bit in "Register 9–Configuration 3," Section 4.3.10, exclusively controls the EWRAP output. This output is typically used to enable a loopback function in an external physical layer device.

When the EWRAP pin is asserted, the signal detect input pin, SD, from an external physical layer device may be in an unknown state. To counteract this, the SD_EN bit in Register 9 "Configuration 3" should also be cleared when the EWRAP assert bit is set.

2.12.6 Signal Detect

There is an additional signal detect input pin, SD, which indicates to the controller that the receive data detected on RXD[9:0] contains valid data. If SD is asserted, the input data is assumed valid and the receive 8B10B PCS section is unaffected. If SD is deasserted, the data is assumed to be invalid and the receive 8B10B PCS section is forced into the loss of sync state. Although SD is not part of the IEEE-defined 10-bit PHY interface, it is typically sourced from an external physical layer device.

The controller powers up with the SD pin disabled (SD has no affect on the receive word synchronization state machine). To enable the SD pin, the SD_EN bit must be set in "Register 9–Configuration 3," Section 4.3.10.

Copyright © 2000–2001 by LSI Logic Corporation. All rights reserved.

There is also a SD status bit in "Register 11–Status 1," Section 4.3.12, which reflects the state of the SD input pin. If the SD pin is HIGH the SD bit is forced to 1; if the SD pin is LOW the SD bit is also forced to 0.

2.12.7 TBC Disable

The transmit side of the 10-bit PHY interface can be disabled if the TBC_DIS bit is set in "Register 10–Configuration 4," Section 4.3.11. When this bit is set, the TBC and TX[9:0] outputs are placed in a high-impedance state.

2.13 Packet Discard

The controller can be programmed to discard receive and transmit packets when certain error conditions are detected. The detection of these error conditions can occur in the MAC, FIFO, or 8B10B PCS sections.

2.13.1 Transmit Discards

Transmit packets are automatically discarded if certain error conditions are detected. These error conditions are described in Table 2.9. When a discard error is detected for a transmit packet, any remaining data for that packet being input from the system interface is ignored, a /V/ code is appended to the end of the packet to indicate an error to a remote station, and TXDC is asserted if the packet was being input from the system interface when the discard occurred.

Table 2.9 Transmit Discard Conditions

Discard Condition	Description
Transmit FIFO Underflow	TX FIFO empty. Packet transmission to 8B10B PCS halted. Partially transmitted packet is terminated with a /V/ code, followed by normal /I/ codes.
Transmit FIFO Overflow	TX FIFO full. No more data accepted from the system interface. Partially transmitted packet is terminated with a /V/ code, followed by normal /I/ codes.

Copyright © 2000–2001 by LSI Logic Corporation. All rights reserved.

2.13.2 Receive Discards

Receive packets can be discarded if the error conditions listed in Table 2.10 are detected. The discard behavior is dependent on whether or not the packet is being output on the system interface when the discard condition is detected. If the packet containing the error is not being output on the system interface when the discard condition is detected (an internal discard) the packet is discarded, (all data from the packet containing the error is flushed from the receive FIFO). If the packet containing the error is being output on the system interface when the discard condition is detected (an external discard) the RXDC pin is asserted to indicate the error condition. Asserting the RXABORT pin or setting the AUTORXAB bit in "Register 9–Configuration 3," Section 4.3.10, automatically discards the packet. For both internal and external discarded packets, the appended status word is updated to reflect the discard error condition.

Table 2.10 Receive Discard Conditions

Discard Condition	Description
Receive FIFO overflow	Receive FIFO full. No more data accepted from the 8B10B PCS.
CRC error	Receive packet has a CRC error.
Undersize packet	Receive packet is less than 64 bytes, exclusive of preamble and SFD.
Oversize packet	Receive packet is greater than maximum packet size, exclusive of preamble and SFD.
PCS codeword error	Receive packet contains at least one word with an 8B10BPCS coding error.
RXABORT pin asserted	RXABORT pin was asserted while the receive packet was read out on the system interface. The process of flushing a receive packet with RXABORT pin requires extra SCLK cycles equal to: (packet length in bytes)/8 + 6.

Each of the receive discard conditions can be individually removed as a discard condition by appropriately clearing the appropriate discard bit in "Register 8–Configuration 2," Section 4.3.9, associated with the corresponding condition. When these bits are cleared, a packet that is afflicted with the error condition indicated by that bit is not discarded.

Copyright © 2000–2001 by LSI Logic Corporation. All rights reserved.

The controller can be programmed to send status words for discarded packets to the receive FIFO. See Section 2.14, “Receive Status Word” for more details on status word configuration.

Note: Receive FIFO underflow is not listed as a discard condition in Table 2.10, (packets are not discarded when corrupted by receive FIFO underflow). However, receive FIFO underflow does cause the assertion of RXDC.

2.13.3 Discard Output Indication

When a discard condition is detected on a packet being received or transmitted over the system interface, the TXDC and RXDC output pins are asserted to indicate that the discard error was detected. TXDC and RXDC are normally latched HIGH when a discard takes place. Asserting CLR_TXDC and CLR_RXDC clearing pins, clears the TXDC and RXDC outputs.

2.13.4 AutoClear Mode

Programming the controller to be in the AutoClear mode automatically self clears the TXDC and RXDC pins. To program the controller for the AutoClear mode, set the AUTOCLR bit in “Register 9–Configuration 3," Section 4.3.10. When the controller is in the AutoClear mode, TXDC and RXDC are automatically cleared three SCLK cycles after the next end of packet occurs.

2.13.5 AutoAbort Mode

When the AutoAbort mode is enabled the controller can also automatically abort the current packet on the system interface in the receive FIFO when a discard condition is detected and RXDC is asserted. Set the AUTORXAB bit in “Register 9–Configuration 3," Section 4.3.10, to enable the AutoAbort mode.

Copyright © 2000–2001 by LSI Logic Corporation. All rights reserved.

2.14 Receive Status Word

A 32-bit status word can be appended to the end of each good receive data packet and stored in the receive FIFO. This status word contains a byte count and error information for the receive data packet.

2.14.1 Format

The format for the status word is shown in Table 2.11. The upper sixteen bits contain the actual byte count for the packet and the lower sixteen bits contain the status information related to the packet. Note that the endian select bit affects the byte order of the status word in the same way that it affects the normal data byte order on the system interface.

The byte count value in the status word (upper sixteen bits) is the total number of actual bytes in the received packet minus the preamble, SFD, and CRC bytes. The byte count is independent of whether the receive MAC has stripped the preamble or CRC. If the packet overflows the receive FIFO, the byte count stops counting at the moment that the receive FIFO overflow has been detected and the remaining bytes on the incoming packet are not counted.

Table 2.11 Receive Status Word Definition

RXD31						RXD16
BC[15:0]						
RXD15						RXD0
RESERVED	MPKT	CWRD	OSIZE	USIZE	OVFL	CRC

Symbol	Name	Definition	Position on RXD[31:0][1]
BC[15:0]	Byte count	Contains actual byte count of the receive packet	RXD[31:16]
–	–	Reserved	RXD[15:6]
MPKT	Multiple packet reject	1 = RX FIFO full and multiple consecutive packets were discarded. Status word indicates error condition for first packet of discarded group.	RXD5
CWRD	Codeword error	1 = Receive packet has PCS coding error	RXD4

Copyright © 2000–2001 by LSI Logic Corporation. All rights reserved.

Symbol	Name	Definition	Position on RXD[31:0][1]
OSIZE	Oversize packet	1 = Receive packet is greater than maximum size	RXD3
USIZE	Undersize packet	1 = Receive packet is less than minimum size	RXD2
OVFL	Receive FIFO overflow	1 = Receive FIFO is full and has received additional data	RXD1
CRC	CRC error	1 = Receive packet has a CRC error	RXD0

1. This byte order is for little endian format. Big endian format reverses this byte order.

2.14.2 Append Options

The status word is normally appended to the end of all good receive packets. However, the controller can also be programmed to store a status word in the receive FIFO for discarded packets as well as append a status word to the end of good (nondiscarded) packets. The controller can also be programmed to not append any status word at all. Setting the STSWRD [1:0] bits in "Register 7–Configuration 1," Section 4.3.8, select the appropriate status word option.

2.14.3 Status Word for Discarded Packets

When the controller is programmed to add a status word for discarded packets, only the status word is stored in the receive FIFO for each discarded packet. The status word for a discarded packet contains an indication of the error that caused the discard. If the receive FIFO is full and more than one consecutive packet was discarded, then one more status word is stored in the receive FIFO for the next consecutive group of discarded packets. A bit is set in the status word indicating that multiple status words or multiple packets have been discarded. When a status word has the multiple discard bit set, the other status bits reflect the status of the second discarded packet only.

2.14.4 Status Word for RXABORT Packets

When the RXABORT pin is asserted, both the packet data and its associated status word are normally flushed from the receive FIFO. Setting the RXAB_DEF bit in "Register 9–Configuration 3," Section 4.3.10, programs the controller to allow the RXABORT pin to discard the packet only and leave the status word for the discarded packet in the receive FIFO.

Copyright © 2000–2001 by LSI Logic Corporation. All rights reserved.

2.15 AutoNegotiation

The AutoNegotiation algorithm is a negotiation sequence between two stations over the 10-bit PHY interface that establishes a good link between two stations, and configures both stations for the same mode of operation. The AutoNegotiation algorithm in the controller meets all specifications defined in IEEE 802.3z.

AutoNegotiation uses a stream of /C/ ordered sets to pass an AutoNegotiation data word to and from a remote station. The /C/ ordered set stream consists of an alternating sequence of /C1/ and /C2/ ordered sets. The /C1/ and /C2/ ordered sets contain two unique 10B code words plus a 16-bit AutoNegotiation data word, as defined in IEEE 802.3z and shown in Figure 2.6.

Figure 2.6 AutoNegotiation Data Format

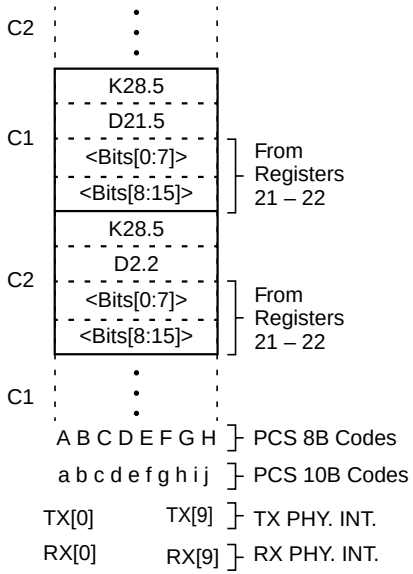

Note:
< > Means 10B Encoded

Copyright © 2000–2001 by LSI Logic Corporation. All rights reserved.

Any of the following conditions iniatiate the AutoNegotiation algorithm:

- Controller reset
- AutoNegotiation restart bit set
- /C/ ordered sets received from remote end
- Controller reacquires receive word synchronization

After a negotiation has been initiated the controller uses the contents of "Register 21–AutoNegotiation Base Page Transmit," Section 4.3.18, to advise a remote device of its capabilities. The remote device does the same, and the capabilities read back from the remote device are stored in the AutoNegotiation Base Page Receive register. The controller's capabilities can then be externally compared to the capabilities received from the remote device, and the device can then be configured for a compatible mode of operation. The controller also has next page capability. For a complete description of the AutoNegotiation algorithm in the controller, refer to IEEE 802.3z specification, clause 37.

If the 8B10B PCS receiver has lost word synchronization, the controller needs to acquire synchronization before AutoNegotiation words can be successfully received. While it is in the loss of synchronization state, the transmitter outputs /C/ ordered sets with the remote fault bits set to RF[1:0] = 0b01 to indicate the link failure condition to the remote end. After the 8B10B PCS receiver has acquired word synchronization, the negotiation process is ready to begin.

2.15.1 Next Page

The controller also has the next page capability defined in IEEE 802.3z. The next page feature allows the transfer of additional 16-bit data words between stations during a negotiation sequence in addition to the original base page message information. These additional 16-bit data words are referred to as next pages and can contain any arbitrary data.

If a next page is to be transmitted, the NP bit must be set in "Register 21–AutoNegotiation Base Page Transmit," Section 4.3.18, to indicate this to the remote station. Conversely, if a remote station wants to send a next page to the controller, it sets the NP bit in the base page, which is stored in "Register 22–AutoNegotiation Base Page Receive," Section 4.3.19. The next pages to be transmitted to the remote station have to be written into "Register 23–AutoNegotiation Next Page

Copyright © 2000–2001 by LSI Logic Corporation. All rights reserved.

Transmit," Section 4.3.20, in order to be transmitted. The next pages received from the remote station are stored in "Register 24–AutoNegotiation Next Page Receive," Section 4.3.21. Both stations must have the next page functionality for a successful next page transfer. Next page operation is complicated; refer to IEEE 802.3z for a full description of how this feature works and to Chapter 4, Registers for a description of the associated registers.

There are status bits related to next page operation. See Section 2.15.2, "Negotiation Status" for details.

2.15.2 Negotiation Status

There are bits in "Register 11–Status 1," Section 4.3.12, that indicate the status of AutoNegotiation. These bits are summarized in Table 2.12 and are described in more detail in the Status 1 register description. Some of the bits related to AutoNegotiation can be programmed to cause an interrupt, as described in the Status 1 register description.

Table 2.12 AutoNegotiation Status Bits

Register 11 Bit No.	Bit Name	What Bit Indicates
11	LINK	Link is up, autoNegotiation has completed
7	AN_NP	One TX and one RX next page has been exchanged
6	AN_TX_NP	One next page has been transmitted
5	AN_RX_NP	One next page has been received
4	AN_RX_BP	Base page has been received
3	AN_RMTRST	AutoNegotiation was restarted by remote station

2.15.3 AutoNegotiation Restart

Setting the ANRST bit in "Register 7–Configuration 1," Section 4.3.8, restarts the AutoNegotiation algorithm. The ANRST bit clears itself automatically after the AutoNegotiation process starts transmitting /C/ ordered sets.

Copyright © 2000–2001 by LSI Logic Corporation. All rights reserved.

2.15.4 AutoNegotiation Enable

Setting the AN_EN bit in "Register 9–Configuration 3," Section 4.3.10, enables the AutoNegotiation algorithm. When AutoNegotiation is disabled the transmitter will output /I/ ordered sets.

2.15.5 Link Indication

The successful completion of the AutoNegotiation process (and by definition the receiver has also acquired word synchronization) is indicated by asserting the LINKn pin LOW, and setting the LINK bit in "Register 11–Status 1," Section 4.3.12. The LINK output pin can drive an LED from VCC or GND as well as drive another digital input.

2.16 Flow Control

Flow control causes a remote station to temporarily halt sending packets in order to prevent packet loss in a congested system. The controller uses MAC control frames for flow control, according to IEEE 802.3x specifications. Refer to Section 2.17, "MAC Control Frames" for more details on the MAC control frame flow control scheme.

2.17 MAC Control Frames

MAC control frames are packets that pass signaling information between stations and are specified in IEEE 802.3, Clause 31. MAC control frames are used primarily for flow control.

MAC control frames are differentiated from other packets because they have the unique value of 0x8808 in the length/type field. MAC control frames have the same format as normal Ethernet packets, except the data field, consists of an opcode field and a parameter field. The opcode field contains an opcode command and the parameter field contains a value associated with the opcode command. The only opcode command defined to date by IEEE 802.3x is the pause opcode; the parameter field for the pause opcode defines the pause time. MAC control frames with the pause opcode, referred to as pause frames, are only allowed to have a destination address equal to a specific reserved multicast address or the address of the receive station itself. The value of the reserved multicast address is 0x0180C2000001.

Copyright © 2000–2001 by LSI Logic Corporation. All rights reserved.

The controller normally treats MAC control frames according to the IEEE 802.3, clause 31 algorithm. When the receive MAC detects a MAC control frame with a pause opcode and the destination address equals the reserved multicast address or address stored in the MAC Address 1–3 registers, then the transmitter is paused for a time equal to the number of pause times specified in the parameter field. Each unit of pause time equals 512 bits (512 ns for Gigabit Ethernet). If a pause frame is received while another packet is being transmitted, the transmission is completed for the current packet being transmitted, and then the transmitter is paused. If there are other packets in the transmit FIFO their transmission is delayed until the pause timer has expired. MAC control frames are not normally passed into the receive FIFO; they are terminated in the receive MAC.

The controller has also incorporated some additional features to facilitate MAC control frame operation. These features are described in the following sections.

2.17.1 Automatic Pause Frame Generation

Pause frames can be automatically generated when either the FCNTRL pin is asserted or the receive FIFO data exceeds the MAC control AutoSend threshold. These automatically generated pause frames, referred to as autogenerated pause frames, are internally generated and transmitted over the 10-bit PHY interface. The reception of a receive pause frame does not affect the transmission of autogenerated pause frames. Receive pause frames only inhibit the transmission of regular packets from the transmit FIFO.

If a packet transmission is in progress when an autogenerated pause frame is to be transmitted, the controller waits until the transmission of that packet has completed and then transmits the autogenerated pause frame before any other subsequent packets in the TX FIFO are transmitted. When the first autogenerated pause frame begins transmission, an internal timer starts whose value is equal to the pause_time value in the pause frame (and obtained from “Register 20–Flow Control 2," Section 4.3.17). If the FCNTRL pin is still asserted or the MAC control frame AutoSend threshold is still exceeded when the internal pause timer expires, another autogenerated pause frame is transmitted. This process continues as long as FCNTRL remains asserted or the MAC control frame AutoSend threshold is exceeded.

Copyright © 2000–2001 by LSI Logic Corporation. All rights reserved.

When FCNTRL is deasserted and the MAC control AutoSend threshold is not exceeded, one last autogenerated pause frame of pause_time = 0 is transmitted. To compensate for latency, the internal pause timer internally shortens itself by 32 units from the value programmed in "Register 20–Flow Control 2," Section 4.3.17.

Clearing the MCENDPS bit in "Register 19–Flow Control 1," Section 4.3.16 programs the controller to eliminate the last autogenerated pause frame with a pause_time = 0.

The structure of the autogenerated pause frame is described in Figure 2.7.

Note: The source address and pause_time parameter fields are programmable through internal registers as shown in Figure 2.7.

The FCNTRL pin and the MAC control AutoSend threshold can be individually disabled, (they can be programmed to no longer initiate the transmission of autogenerated pause frames). The FCNTRL pin is enabled by default. Setting the FCNTRL_DIS bit in "Register 9–Configuration 3," Section 4.3.10, disables the FCNTRL pin. The MAC control AutoSend is disabled by default. Appropriately setting the MAC control MCASND[3:0] bits in "Register 19–Flow Control 1," Section 4.3.16, enables the MAC control AutoSend.

2.17.2 Transmitter Pause Disable

Receive pause frames normally pause the transmitter. Clearing the MCNTRL bit in "Register 19–Flow Control 1," Section 4.3.16, programs the controller to not pause the transmitter. When the MCNTRL bit is 0 received pause frames do not affect the transmitter.

2.17.3 Pass Through to FIFO

Receive pause frames are normally discarded and not passed to the receive FIFO. Appropriately setting the MCPASS[1:0] bits in "Register 19–Flow Control 1," Section 4.3.16, allows the receive pause frames to be passed to the receive FIFO. These bits allow either all MAC control frames, nonpause frames only, or pause frames only to be passed to the receive FIFO.

Copyright © 2000–2001 by LSI Logic Corporation. All rights reserved.

Figure 2.7 Autogenerated Pause Frame Format

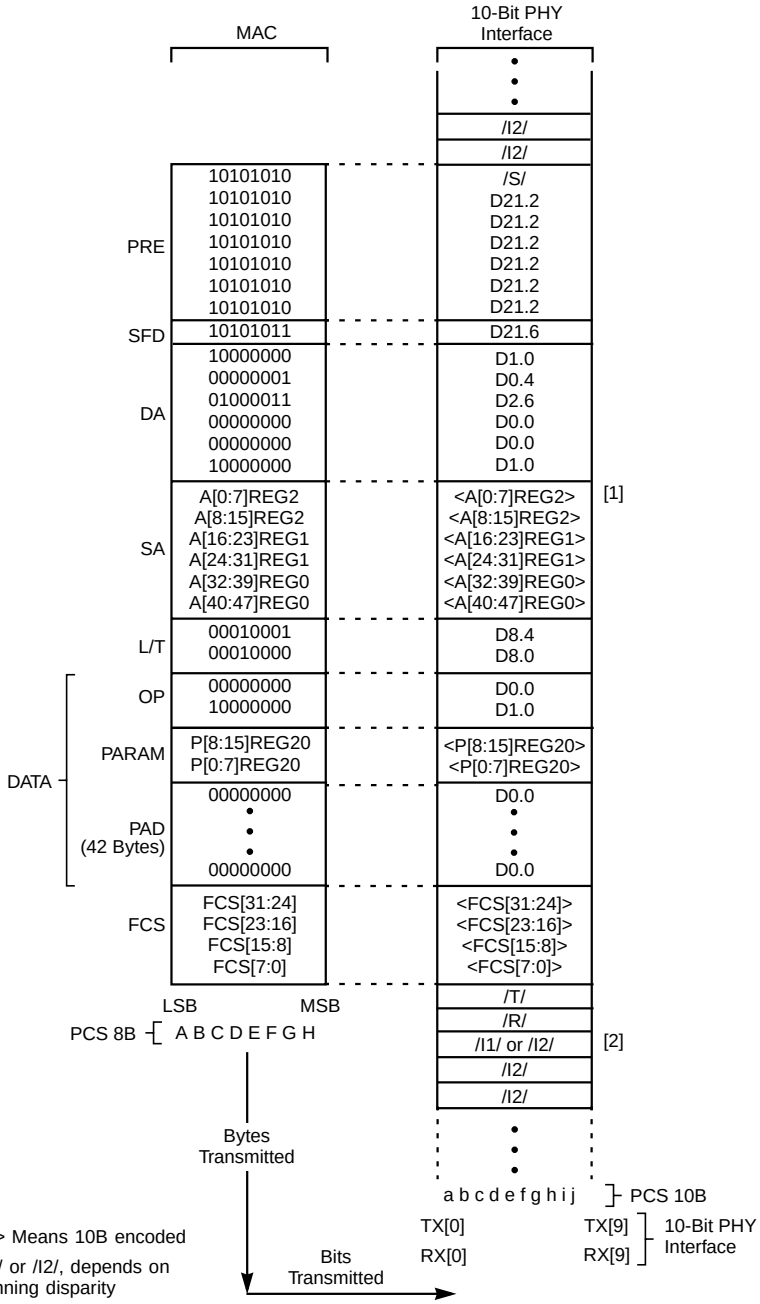

Notes:

[1] < > Means 10B encoded

[2] /I1/ or /I2/, depends on running disparity

Copyright © 2000–2001 by LSI Logic Corporation. All rights reserved.

2.17.4 Reserved Multicast Address Disable

Receive pause frames are normally rejected as invalid if they do not have the reserved multicast address in the destination address field. Setting the MCFLTR bit in "Register 19–Flow Control 1," Section 4.3.16, programs the controller to accept receive pause frames regardless of the contents in the destination address field. When this bit is cleared, any value in the destination address field is accepted as a valid address.

2.17.5 MAC Control Frame AutoSend

The level of data in the receive FIFO also triggers the transmission of autogenerated pause frames. This feature is referred to as MAC control frame AutoSend. Appropriately setting the MCASEND[3:0] bits in "Register 19–Flow Control 1," Section 4.3.16, enable the AutoSend feature. When MAC control frame AutoSend is enabled, autogenerated pause frames are transmitted when the receive FIFO data exceeds a programmable threshold level called the MAC control AutoSend threshold. The MAC control AutoSend threshold can be set with the four MACSEND bits in "Register 19–Flow Control 1," Section 4.3.16. The automatic pause frame generation mechanism is described in more detail in Section 2.17.1, "Automatic Pause Frame Generation".

2.18 Reset

The controller has four resets which are described in Table 2.13. The controller should be ready for normal operation 1 µs after the reset sequence has been completed for that bit.

Copyright © 2000–2001 by LSI Logic Corporation. All rights reserved.

Table 2.13 Reset Description

Name	Initiated By	Reset Action
Controller Reset	RESETn pin asserted LOW RST bit = 1 in Register 7 (Configuration i)	Reset datapath
		Flush transmit FIFO
		Flush receive FIFO
		Reset bits to default values
		Reset counters to 0
Transmit Reset	TXRST bit = 1 in Register 7 (Configuration 1)	Reset transmit data path
		Flush transmit FIFO
		Reset TX counters to 0
Receive Reset	RXRST bit = 1 in Register 7 (Configuration 1)	Reset receive data separate path
		Flush receive FIFO
		Reset RX counters to 0
AutoNegotiation Restart	ANRST bit = 1 in Register 7 (Configuration 1)	Starts AutoNegotiation sequence
Counter Reset	CTRRST bit = 1 in Register 7 (Configuration 1)	Reset counters to 0

2.19 Counters

The controller has a set of 53 management counters. Each counter tabulates the number of times a specific event occurs. A complete list of all counters along with their definitions is shown in Table 2.14. and described in Chapter 4, Registers.These counters provide the necessary statistics to completely support the following specifications:

- RMON Statistics Group (IETF RFC1757)
- SNMP Interfaces Group (IETF RFC1213 and 1573)
- Ethernet-Like MIB (IETF RFC1643)
- Ethernet MIB (IEEE 802.3z, clause 30)

Copyright © 2000–2001 by LSI Logic Corporation. All rights reserved.

All counters are 32 bits wide. To obtain each 32-bit counter result, perform a read operation over the register interface. The address locations for each counter are shown in both Table 2.14 and Table 4.2. For the two 16-bit register locations associated with each 32-bit counter, the register with the lower value address always contains the least significant 16 bits of the counter result. Thus, C0 of the lower value address register is the counter LSB; C15 of the higher value address register is the counter MSB.

When a counter read operation is initiated, the 32-bit counter result to be accessed is transferred to two internal 16-bit holding registers. These holding registers freeze and store the counter result for the duration of the read operation, while allowing the internal counter to continue to increment if needed.

When a counter is read, the count can, under program control, be automatically reset to zero or remain unchanged. Counters can be programmed to either stop counting when they reach their maximum count or roll over. Burst reading is only supported for the low and high value address of the same counter. To read the value of multiple counters, either REGCSn or REGRDn must be deasserted then reasserted.

Each counter has an associated status bit that is set when the counter becomes half full. These status bits can be individually programmed to cause an interrupt.

The counter set in Table 2.14 includes the packet and octet statistics for the transmit and receive sides. The RMON specification literally states that packet and octet counters should only tabulate received information. This is sometimes interpreted to mean both transmitted and received information because Ethernet was originally a shared media protocol. As such, packet and octet counters for both transmit and receive are available in the controller, and the transmit and receive packet and octet counts can be summed together if desired.

The exact correspondence of the actual MIB objects from the IETF and IEEE specifications to the actual controller counters locations is described in Chapter 5, Application Information.

Copyright © 2000–2001 by LSI Logic Corporation. All rights reserved.

Table 2.14 Counter Definition

Counter Number	Counter Name (MIB Object Name)	Counter Description			
		RX/TX	Definition	Size (Bits)	Register Address REGAD[7:0] (Low/High)
RMON Statistics Group MIB (RFC 1757)					
1	etherStatsDropEvents	RX	Packets with receive FIFO overflow error.	32	0b10000000 0b10000001
2	etherStatsOctets	RX	Bytes, exclusive of preamble, in good or bad packets. Bytes in packets with bad SFD are excluded.[1]	32	0b10000010 0b10000011
3	etherStatsPkts	RX	All packets, good or bad.[1]	32	0b10000100 0b10000101
4	etherStatsBroadcastPkts	RX	Broadcast packets, good only.[1]	32	0b10000110 0b10000111
5	etherStatsMulticastPkts	RX	Multicast packets, good only.[1]	32	0b10001000 0b10001001
6	etherStatsCRCAlignErrors	RX	Packets of legal-length with CRC error or alignment error. There are no alignment errors in 8B10B Gigabit Ethernet, so this counter will only count CRC errors for legal length packets.	32	0b10001010 0b10001011
7	etherStatsUndersizePkts	RX	Packets of length < 64 bytes with no other errors.	32	0b10001100 0b10001101
8	etherStatsOversizePkts	RX	Packets of length > Max_Packet_Length with no other errors.	32	0b10001110 0b10001111
9	etherStatsFragments	RX	Packets of length < 64 bytes with CRC error or alignment error. There are no alignment errors in 8B10B Gigabit Ethernet, so this counter will only count CRC errors with length < 64.	32	0b10010000 0b10010001
10	etherStatsJabber	RX	Packets of length > Max_Packet_Length with CRC error or alignment error. There is no jabber function in Gigabit Ethernet, so this counter is undefined.	32	0b10010010 0b10010011

Copyright © 2000–2001 by LSI Logic Corporation. All rights reserved.

Table 2.14 Counter Definition (Cont.)

Counter Number	Counter Name (MIB Object Name)	Counter Description			
		RX/TX	Definition	Size (Bits)	Register Address REGAD[7:0] (Low/High)
11	etherStatsCollisions	TX/ RX	CRS asserted and one or more collsions occurred. Since controller is Full Duplex only, this counter is undefined.	32	0b10010100 0b10010101
12	etherStatsPkts64Octets	RX	Packets of length = 64 bytes, good or bad.[1]	32	0b10010110 0b10010111
13	etherStatsPkts65to127Octets	RX	Packets of length between 65–127 bytes, inclusive, good or bad.[1]	32	0b10011000 0b10011001
14	etherStatsPkts128to255Octets	RX	Packets of length between 128–255 bytes, inclusive, good or bad.[1]	32	0b10011010 0b10011011
15	etherStatsPkts256to511Octets	RX	Packets of length between 256–511 bytes, inclusive, good or bad.[1]	32	0b10011100 0b10011101
16	etherStatsPkts512to1023Octets	RX	Packets of length between 512–1023 bytes, inclusive, good or bad.[1]	32	0b10011110 0b10011111
17	etherStatsPkts1024to1518Octets	RX	Packets of length between 1024 and Max_Packet_Length, inclusive, or bad.[1]	32	0b10100000 0b10100001
18	etherStatsOctets_TX	TX	Bytes, exclusive of preamble, in good or bad packets.[1]	32	0b10100010 0b10100011
19	etherStatsPkts_TX	TX	All packets, good or bad.[1]	32	0b10100100 0b10100101
20	etherStatsBroadcastPkts_TX	TX	Broadcast packets, good only.[1]	32	0b10100110 0b10100111
21	etherStatsMulticastPkts_TX	TX	Multicast packets, good only.[1]	32	0b10101000 0b10101001
22	etherStatsPkts64Octets_TX	TX	Packets of length = 64 bytes, good or bad.[1]	32	0b10101010 0b10101011
23	etherStatsPkts65to127Octets_TX	TX	Packets of length between 65–127 bytes, inclusive, good or bad.[1]	32	0b10101100 0b10101101
24	etherStatsPkts128to255Octets_TX	TX	Packets of length between 128–255, inclusive, good or bad.[1]	32	0b10101110 0b10101111
25	etherStatsPkts256to511Octets_TX	TX	Packets of length between 256–511 bytes, inclusive, good or bad.[1]	32	0b10110000 0b10110001

Copyright © 2000–2001 by LSI Logic Corporation. All rights reserved.

Table 2.14 Counter Definition (Cont.)

Counter Number	Counter Name (MIB Object Name)	Counter Description			
		RX/TX	Definition	Size (Bits)	Register Address REGAD[7:0] (Low/High)
26	etherStatsPkts512to1023Octets_TX	TX	Packets of length between 512–1023 bytes, inclusive, good or bad.[1]	32	0b10110010 0b10110011
27	etherStatsPkts1024to1518Octets_ TX	TX	Packets of length between 1023 and Max_Packet _Length, inclusive, good or bad.[1]	32	0b10110100 0b10110101
SNMP Interfaces Group MIB (RFC 1213 & 1573)					
28	ifInOctets	RX	Bytes, including preamble, in good or bad packets.	32	0b10110110 0b10110111
	ifInUcastPkts	RX	Unicast packets, good only.		0b10111000 0b10111001
	ifInMulticastPkts	RX	Multicast packets, good only. Equivalent to "etherStatsMulticastPkts"		Use Ctr. #5
	ifInBroadcastPkts	RX	Broadcast packets, good only. Equivalent to "etherStatsBroadcastPkts"		Use Ctr. #4
	ifInNUcastPkts	RX	Broadcast and multicast packets, good only. Equivalent to "etherStatsBroadcastPkts + etherStatsMulticastPkts"		Use Ctr. #4 and 5
	ifInDiscards	RX	Packets with receive FIFO overflow error. Equivalent to "etherStatsDropEvents"		Use Ctr. #1
29	ifInErrors	RX	All packets, bad only. Equivalent to "etherStatsCRCAlignError + etherStatsUndersizePkts + etherStatsOversizePkts"	32	Use Ctr. #6 and 7 and 8
30	ifOutOctets	TX	Bytes, including preamble, in good or bad packets.	32	0b10111010 0b10111011
31	ifOutUcastPkts	TX	Unicast packets, good and bad.	32	0b10111100 0b10111101
32	ifOutMulticastPkts	TX	Multicast packets, good and bad.	32	0b10111110 0b10111111

Copyright © 2000–2001 by LSI Logic Corporation. All rights reserved.

Table 2.14 Counter Definition (Cont.)

Counter Number	Counter Name (MIB Object Name)	Counter Description			
		RX/TX	Definition	Size (Bits)	Register Address REGAD[7:0] (Low/High)
	ifOutBroadcastPkts	TX	Broadcast packets, good and bad.		0b11000000 0b11000001
33	ifOutNUcastPkts	TX	Broadcast and multicast packets, good and bad. Equivalent to "ifOutMulticastPkts + ifOutBroadcastPkts"	32	Use Ctr. #32 and 33
34	ifOutDiscards	TX	Packets with transmit FIFO underflow error.	32	0b11000010 0b11000011
35	ifOutErrors	TX	All Packets, bad only, exclusive of legal-length errors.	32	0b11000100 0b11000101
Ethernet-Like Group MIB (RFC 1643)					
	dot3StatsAlignmentErrors	RX	Packets with alignment error only. There are no alignment errors in 8B10B Gigabit Ethernet, so this counter is undefined.		0b11000110 0b11000111
36	dot3StatsFCSErrors	RX	Packets with CRC error only. Equivalent to "etherStatsCRCAlignErrors"	32	Use Ctr. #6
38	dot3StatsSingleCollisionFrames	TX	Packets successfully transmitted after one and only one collision (ie: attempt value = 2). Since controller is Full Duplex only, this counter is undefined.	32	0b11001010 0b11001011
39	dot3StatsMultipleCollisionFrames	TX	Packets successfully transmitted after more than one collision (ie: 2<attempt value<16). Since controller is Full Duplex only, this counter is undefined.	32	0b11001100 0b11001101
40	dot3StatsSQETestErrors	RX	Number of times SQE was asserted. There is no SQE for Gigabit Ethernet, so this counter is undefined.	32	0b11001110 0b11001111
41	dot3StatsDeferredTransmissions	TX	Packets deferred, i.e. packets whose transmission was delayed due to busy medium, on first attempt only. Since controller is Full Duplex only, this counter is undefined.	32	0b11010000 0b11010001

Copyright © 2000–2001 by LSI Logic Corporation. All rights reserved.

Table 2.14 Counter Definition (Cont.)

Counter Number	Counter Name (MIB Object Name)	Counter Description			
		RX/TX	Definition	Size (Bits)	Register Address REGAD[7:0] (Low/High)
42	dot3StatsLateCollisions	TX	Packets that encounter a late collision, i.e. encountered collisions more than 512-bit times into transmitted packet. A late collision is counted twice: as a collision and a late collision. Since controller is Full Duplex only, this counter is undefined.	32	0b11010010 0b11010011
	dot3StatsExcessiveCollisions	TX	Packets not successfully transmitted after more than 15 collisions (ie: attempt value=16). Since controller is Full Duplex only, this counter is undefined.		0b11010100 0b11010101
43	dot3StatsInternalMacTransmitErrors	TX	Packets with transmit FIFO underflow error. Equivalent to "ifOutDiscards"	32	Use Ctr. #34
	dot3StatsCarrierSenseErrors	TX	Carrier sense dropout errors, i.e. number of times that carrier sense is not asserted or deasserted during packet transmission, without a collision. This counter is only incremented once per packet, regardless of the number of dropout errors in the packet. There is no CRS loopback in 8B10B Ethernet, so this counter is undefined.		0b11010110 0b11010111
	dot3StatsFrameTooLongs	RX	Packets of length > Max_Packet_Length with no other errors. Equivalent to "etherStatsOversizePkts"		Use Ctr. #8
44	dot3StatsInternalMacReceiveErrors	RX	Packets with receive FIFO overflow error. Equivalent to "etherStatsDropEvents"	32	Use Ctr. #1
Ethernet MIB (IEEE 802.3z Clause 30)					
	aFramesTransmittedOK	TX	All packets, good only. Equivalent to "etherStatsPkts_TX - ifOutErrors"		Use Ctr. #19 through 35
44	aSingleCollisionFrames	TX	Packets successfully transmitted after one and only one collision (ie: attempt value = 2). Equivalent to "dot3StatsSingleCollisionFrames"	32	Use Ctr. #38

Copyright © 2000–2001 by LSI Logic Corporation. All rights reserved.

Table 2.14 Counter Definition (Cont.)

Counter Number	Counter Name (MIB Object Name)	Counter Description			
		RX/TX	Definition	Size (Bits)	Register Address REGAD[7:0] (Low/High)
	aMultipleCollisionFrames	TX	Packets successfully transmitted after more than one collision (ie: 2<attempt value <16). Equivalent to "dot3StatsMultipleCollisionFrames"		Use Ctr. #39
	aFramesReceivedOK	RX	All packets, good only. Equivalent to "ifInUcastPkts + etherStatsBroadcastPkts + etherStatsMulticastPkts"		Use Ctr. #29 and 4 and 5
	aFrameCheckSequenceErrors	RX	Packets with CRC error only. Equivalent to "dot3StatsFCSErrors"		Use Ctr. #37
44	aAlignmentErrors	RX	Packets with alignment error only. Equivalent to "dot3StatsAlignmentErrors"	32	Use Ctr. #36
	aOctetsTransmittedOK	TX	Bytes, exclusive of preamble, in good packets only.		0b11011000 0b11011001
	aFramesWithDeferredXmissions	TX	Packets deferred, i.e. packets whose transmission was delayed due to busy medium, on first attempt only. Equivalent to "dot3StatsDeferredTransmissions"		Use Ctr. #41
	aLateCollisions	TX	Packets that encounter a late collision, i.e. encountered collisions more than 512-bit times into transmitted packet. A late collision is counted twice, as a collision and a late collision. Equivalent to "dot3StatsLateCollisions"		Use Ctr. #42
	aFrameAbortedDueToXSCollisions	TX	Packets not successfully transmitted after more than 15 collisions (ie: attempt value=16). Equivalent to "dot3StatsExcessiveCollisions"		Use Ctr. #43
45	aFrameAbortedDueToIntMACXmit Error	TX	Packets with transmit FIFO underflow error. Equivalent to "ifOutDiscards"	32	Use Ctr. #34

Copyright © 2000–2001 by LSI Logic Corporation. All rights reserved.

Table 2.14 Counter Definition (Cont.)

Counter Number	Counter Name (MIB Object Name)	Counter Description			
		RX/TX	Definition	Size (Bits)	Register Address REGAD[7:0] (Low/High)
45	aCarrierSenseErrors	TX	Carrier sense dropout errors, i.e. number of times that carrier sense is not asserted or deasserted during packet transmission, without a collision. This counter is only incremented once per packet, regardless of the number of dropout errors in the packet. Equivalent to "dot3StatsCarrierSenseErrors"	32	Use Ctr. #44
	aOctetsReceivedOK	RX	Bytes, exclusive of preamble, in good packets only.		0b11011010 0b11011011
	aFramesLostDueToIntMACRcvr Error	RX	Packets with receive FIFO overflow error. Equivalent to "etherStatsDropEvents"		Use Ctr. #1
	aMulticastFrameXmittedOK	TX	TX Multicast packets, good only. Equivalent to "etherStatsMulticastPkts_TX"		Use Ctr. #21
46	aBroadcastFramesXmittedOK	TX	TX Broadcast packets, good only. Equivalent to "etherStatsBroadcastPkts_TX"	32	Use Ctr. #20
	aFramesWithExcessiveDefferal	TX	Packets with excessive deferral, i.e. packets waiting for transmission longer than two max packet times. Since controller is Full Duplex only, this counter is undefined.		0b11011100 0b11011101
	aMulticastFramesReceivedOK	RX	Multicast packets, good only. Equivalent to "etherStatsMulticastPkts"		Use Ctr. #5
47	aBroadcastFramesReceivedOK	RX	Broadcast packets, good only. Equivalent to "etherStatsBroadcastPkts"	32	Use Ctr. #4
48	aInRangeLengthErrors	RX	Packets of legal-length whose actual length is different from length/type field value.	32	0b11011110 0b11011111
	aOutOfRangeLengthField	RX	Packets with length/type field value > Max_Packet_Length.		0b11100000 0b11100001
49	aFrameTooLongErrors	RX	Packets of length > Max_Packet_Length with no other errors. Equivalent to "etherStatsOversizePkts"	32	Use Ctr. #8

Copyright © 2000–2001 by LSI Logic Corporation. All rights reserved.

Table 2.14 Counter Definition (Cont.)

Counter Number	Counter Name (MIB Object Name)	Counter Description			
		RX/TX	Definition	Size (Bits)	Register Address REGAD[7:0] (Low/High)
49	aSQETestErrors	RX	Number of times SQE was asserted. Equivalent to "dot3StatsSQETestError"	32	Use Ctr. #40
	aSymbolErrorDuringCarrier	RX	One or more symbol errors received from a PHY during packet reception, exclusive of collision. This counter is only incremented once per packet, regardless of the number of symbol errors in that packet.		0b11100010 0b11100011
	aMACControlFramesTransmitted	TX	Valid MAC Control packets. Equivalent to "apauseMACCtrlFramesTransmitted"		Use Ctr. #52
50	aMACControlFramesReceived	RX	Valid MAC Control packets. Equivalent to "apauseMACCtrlFramesReceived"	32	Use Ctr. #53
51	aUnsupportedOpcodesReceived	RX	Valid MAC Control packets with non-pause opcode.	32	0b11100100 0b11100101
52	apauseMACCtrlFramesTransmitted	TX	Valid MAC Control packets with pause opcode.	32	0b11100110 0b11100111
53	apauseMACCtrlFramesReceived	RX	Valid MAC Control packets with pause opcode.	32	0b11101000 0b11101001

1. Footnotes
   a. Bad RX packet = legal-length error, CRC error, receive FIFO overflow, symbol error. Where: CRC Error is bad FCS with an integral number of octets. Alignment Error is bad FCS with nonintegral number of octets. Symbol Error is an invalid codeword or a /V/.
   b. Bad TX packet = legal-length error, transmit FIFO underflow.
   c. Legal-length packet is between 64 and Max_Packet_Length in bytes. Preamble is not included in length count.
   d. Max_Packet_Length for the counters can be programmed to be either 1518, 1522, 1535, or unlimited bytes. 1518 is the default for both transmit and receive.
   e. The counter result is stored in two 16-bit registers. Thus, there are two register addresses for each counter. Of the two registers for a given counter, the register with the lower value address contains the least significant counter bits.
   f. The RMON specs explicitly states that packet and octet counters should only tabulate received information. This is sometimes interpreted to mean both transmitted and received information because Ethernet was originally a shared media. As such, transmit packet and octet counters are also available in counters 18–27 and can be summed with receive packet and octet counts if desired.

Copyright © 2000–2001 by LSI Logic Corporation. All rights reserved.

2.19.1 Counter Half Full

Each 32-bit counter has a half-full status output bit associated with it. The half-full bits are stored in "Register 112–115–Counter Half Full 1-4," Section 4.3.23. A half-full bit is set when its counter value reaches 0x80000000 (MSB bit goes from a 0 to a 1), so it is set when the counter becomes half full.

The counter half-full bits latch themselves when they are set. Each bit stays latched until either the bit is read or the counter register with which the bit is associated is read. Counter half-full bits are also interrupt bits (the setting of any counter half-full bit can be programmed to cause the assertion of the interrupt pin, REGINT). When a read clears the counter half-full bit, the interrupt is also cleared.

Note: REGINT stays asserted until all interrupt bits are cleared.

Each counter half-full bit can be individually programmed to assert (or not assert) the REGINT pin. Setting the appropriate mask bit associated with the counter half full "Registers 120–123–Counter Half Full Mask 1-4," Section 4.3.24, programs the controller to mask (disable) the interrupt caused by the corresponding counter half full detect bit.

2.19.2 Counter Reset On Read

A read operation on a counter does not normally affect the counter values. However, setting the CTR_RD bit in "Register 9–Configuration 3," Section 4.3.10, programs the counter to automatically reset to zero when read.

When the CTR_RD bit is set, a counter is cleared to 0 whenever any one of the two 16-bit counter registers associated with a 32-bit counter is read. An internal holding register stores the entire 32-bit counter result so that the result is correctly read as long as two successive 16-bit counter register reads are performed from the same counter. In order to read the cleared value, the read operation needs to be deasserted then reasserted (i.e., REGCSn and REGRDn).

When the CTR_RD bit is cleared (default), a read does not affect the count in the counter, as long as the counter is not at maximum count. If a counter is at maximum count, its count is always reset to 0 when the counter is read.

Copyright © 2000–2001 by LSI Logic Corporation. All rights reserved.

2.19.3 Counter Rollover

Counters normally roll over to zero when they exceed their maximum count, (receive an increment when counter is at maximum count). The counters can be programmed to freeze and stop counting once they reach their maximum count. Setting the CTR_ROLL bit in "Register 9–Configuration 3," Section 4.3.10, programs the counters to freeze when they reach their maximum count.

2.19.4 Counter Maximum Packet Size

The maximum packet size used for the management counter statistics can be programmed to be one of four values. Setting the CMXPKT[1:0] bits in "Register 10–Configuration 4," Section 4.3.11, select the maximum packet size. This selection is described in the register descriptions for those registers and is also summarized in Table 2.15.

The bits in Table 2.15 affect the maximum packet size for the counters only; the maximum packet size for the MAC section is described in Section 2.8, "Receive MAC".

Table 2.15 Counter Maximum Packet Size Selection

CMXPKT [1:0]	Maximum Packet Size (bytes)
11	Unlimited
10	1535
01	1522
00	1518

2.19.5 Counter Reset

Setting the CTRRST bit in "Register 7–Configuration 1," Section 4.3.8, resets all counters to zero. Asserting the controller reset pin, RESETn, also resets the counters to zero.

Copyright © 2000–2001 by LSI Logic Corporation. All rights reserved.

2.20 Loopback

To enable the diagnostic loopback mode, set the LPBK bit in “Register 10–Configuration 4," Section 4.3.11. When the loopback mode is enabled, the transmit data input to the transmit system interface and output from the 8B10B encoder is internally looped back into the receive 8B10B decoder and is available to be read from the receive system interface.

2.21 Test Modes

The TEST pin is reserved for factory test, and must be tied LOW for normal operation.

Asserting the TAP pin HIGH, sets all inputs and outputs in the high-impedance state. This pin is intended for controller and board diagnostic testing.

Copyright © 2000–2001 by LSI Logic Corporation. All rights reserved.

Copyright © 2000–2001 by LSI Logic Corporation. All rights reserved.

Chapter 3
Signal Descriptions

This chapter describes the 8101/8104 Gigabit Ethernet Controller signals in the following sections:

- Section 3.1, “System Interface Signals”
- Section 3.2, “10-Bit PHY Interface Signals”
- Section 3.3, “Register Interface Signals”
- Section 3.4, “Micellaneous Signals”
- Section 3.5, “Power Supply Signals”

Figure 3.1 is a diagram of the 8101/8104 signals.

Copyright © 2000–2001 by LSI Logic Corporation. All rights reserved.

Figure 3.1 8101/8104 Interface Diagram

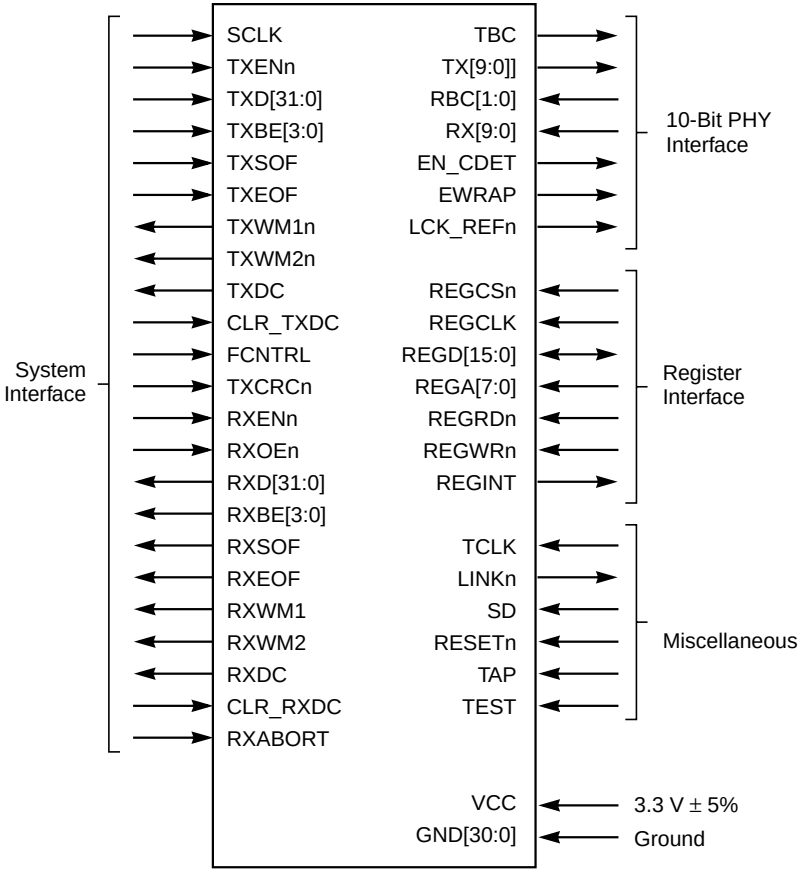

Copyright © 2000–2001 by LSI Logic Corporation. All rights reserved.

3.1 System Interface Signals

This section describes the 8101/8104 system interface signals.

CLR_RXDC **Clear RXDC** **Input**

When CLR_RXDC is asserted, the RXDC pin is cleared. Wheh CLR_RXDC is LOW, the RXDC pin is not cleared. CLR_RXDC is clocked in on the rising edge of the system clock, SCLK.

This pin only clears RXDC when AutoClear mode is disabled. When AutoClear mode is enabled, this pin is ignored and RXDC is automatically cleared two clock cycles after RXEOF is asserted.

CLR_TXDC **Clear TXDC** **Input**

When CLR_TXDC is HIGH, the TXDC pin is cleared. When CLR_TXDC is LOW, the TXDC pin is not cleared. TXDC is clocked in on the rising edge of the system clock, SCLK.

This pin only clears TXDC when AutoClear mode is disabled. When AutoClear mode is enabled, this pin is ignored and TXDC is automatically cleared two clock cycles after TXEOF is asserted.

FCNTRL **Flow Control Enable** **Input**

When FCNTRL is HIGH, transmitter automatically transmits a MAC control pause frame. When FCNTRL is LOW, the controller resumes normal operation. FCNTRL is clocked in on the rising edge of the system clock, SCLK.

RXABORT **Receive FIFO Data Abort** **Input**

When RXABORT is asserted, the packet being read out on RXD[31:0] is aborted and discarded. When LOW, the packet is not aborted and discarded. RXABORT is clocked in on the rising edge of the system clock, SCLK.

RXBE[3:0] **Receive Byte Enable** **Output**

These outputs determine which bytes of the current data on RXD[31:0] contain valid data. RXBE[3:0] is clocked out of the device on the rising edge of the system interface clock, SCLK.

Copyright © 2000–2001 by LSI Logic Corporation. All rights reserved.

RXD[31:0] **Receive Data** **Output**

This output bus contains the 32-bit received data word that is clocked out on the rising edge of the system interface clock, SCLK.

RXDC **Receive Packet Discard** **Output**

When HIGH, device detects that current packet being output on the system interface has an error and should be discarded. When LOW, no discard.

Asserting the RXABORT pin or setting the AUTORXAB bit in "Register 9–Configuration 3," Section 4.3.10, automatically discards the packet being output. RXDC is clocked out on the rising edge of the system clock, SCLK.

If AutoClear mode is not enabled, this output is latched HIGH and stays latched until cleared with the assertion of the CLR_RXDC pin. If AutoClear mode is enabled, this output is latched HIGH and automatically clears itself LOW two clock cycles after RXEOF is asserted. RXDC can also be cleared with RXABORT if programmed to do so.

RXENn **Receive Enable** **Input**

This input must be asserted active LOW to enable the current data word to be clocked out of the receive FIFO on RXD[31:0]. RXENn is clocked in on the rising edge of the system interface clock, SCLK.

RXEOF **Receive End Of Frame** **Output**

This output is asserted on the same clock cycle as the last word of the packet is being read out of the receive FIFO on RXD[31:0]. RXEOF is clocked out of the device on the rising edge of the system interface clock, SCLK.

RXOEn **Receive Output Enable** **Input**

When LOW, all receive outputs are active. When HIGH, receive outputs (RXD[31:0], RXBE[3:0], RXSOF, RXEOF) are high-impedence.

RXSOF **Receive Start Of Frame** **Output**

This output is asserted on the same clock cycle as the first word of the packet is being read out of the receive FIFO on RXD[31:0]. RXSOF is clocked out of the device on the rising edge of the system interface clock, SCLK.

Copyright © 2000–2001 by LSI Logic Corporation. All rights reserved.

RXWM1 **Receive FIFO Watermark 1** **Output**

When RXWM1 is LOW, the receive FIFO data is less than or equal to the receive FIFO watermark 1 threshold. When HIGH, the receive FIFO data is greater than the watermark. RXWM1 is clocked out on the rising edge of the system clock, SCLK. Data is valid on RXD[31:0] when either RXWM1 or RXWM2 is asserted, independent of RXENn.

RXWM2 **Receive FIFO Watermark 2** **Output**

When RXWM2 is LOW, the receive FIFO data is less than or equal to the receive FIFO watermark 2 threshold and no EOF in FIFO. When HIGH, the receive FIFO data is greater than the watermark. RXWM2 is clocked out on the rising edge of the system clock, SCLK. Data is valid on RXD[31:0] when either RXWM1 or RXWM2 is asserted, independent of RXENn.

SCLK **System Interface Clock** **Input**

This input clocks data in and out of the transmit and receive FIFOs on TXD[31:0] and RXD[31:0], respectively. All system interface inputs and outputs are also clocked in and out on the rising edge of SCLK, with the exception of RXOEn. SCLK clock frequency must be between 33–66 MHz.

TXBE[3:0] **Transmit Byte Enable** **Input**

These inputs determine which bytes of the current 32-bit word on TXD[31:0] contain valid data. TXBE[3:0] is clocked into the device on the rising edge of the system interface clock, SCLK.

TXCRCn **Transmit CRC Enable** **Input**

When TXCRC is LOW, CRC is calculated and appended to the current packet being input on the system interface. When TXCRC is HIGH, CRC is not calculated. TXCRCn is clocked in on the rising edge of the system clock, SCLK, and must be asserted on the same SCLK clock cycle as TXSOF.

TXD[31:0] **Transmit Data** **Input**

This input bus contains the 32-bit data word that is clocked into the transmit FIFO on the rising edge of the system interface clock, SCLK.

Copyright © 2000–2001 by LSI Logic Corporation. All rights reserved.

TXDC **Transmit Packet Discard** **Output**

When TXDC is HIGH, the controller detects that current packet being input on the system interface has an error, rest of packet ignored. When LOW, The packet is not discarded. TXDC is clocked out on thr rising edge of the system clock.

If AutoClear mode is not enabled, this output is latched HIGH and stays latched until cleared with the assertion of the CLR_TXDC pin. If AutoClear mode is enabled, this output is latched HIGH and automatically clears itself LOW two clock cycles after TXEOF is asserted.

TXENn **Transmit Enable** **Input**

This input must be low to enable the current data word on TXD[31:0] to be clocked into the transmit FIFO. TXENn is clocked in on the rising edge of the system interface clock, SCLK.

TXEOF **Transmit End Of Frame** **Input**

This input must be asserted on the same clock cycle as the last word of the packet is being clocked in on TXD[31:0]. TXEOF is clocked into the device on the rising edge of the system interface clock, SCLK.

TXSOF **Transmit Start Of Frame** **Input**

This input must be asserted on the same clock cycle as the first word of the packet is being clocked in on TXD[31:0]. TXSOF is clocked into the device on the rising edge of the system interface clock, SCLK.

TXWM1n **Transmit FIFO Watermark 1** **Output**

When TXWM1n is HIGH, the transmit FIFO data is less than or equal to the transmit FIFO watermark 1. When LOW, the transmit FIFO data is above the watermark. TXWM1n is clocked out on the rising edge of the system clock, SCLK.

TXWM2n **Transmit FIFO Watermark 2** **Output**

When TXWM2n is HIGH, the transmit FIFO data is less than or equal to the transmit FIFO watermark 2. When LOW, the transmit FIFO data is above the watermark. TXWM2n is clocked out on the rising edge of the system clock, SCLK.

Copyright © 2000–2001 by LSI Logic Corporation. All rights reserved.

3.2 10-Bit PHY Interface Signals

This section describes the 8101/8104 10-Bit PHY interface signals.

EN_CDET **Comma Detect Enable** **Output**
This output is asserted when either the receive 8B10B PCS state machine is in the loss of synchronization state or the CDET bit is set in "Register 9–Configuration 3," Section 4.3.10. This output is typically used to enable the comma detect function in an external physical layer device.

EWRAP **Loopback Output Enable** **Output**
This output is asserted whenever the EWRAP bit is set in "Register 9–Configuration 3," Section 4.3.10. This output is typically used to enable loopback in an external physical layer device.

LCK_REFn **Receiver Lock** **Output**
This output is asserted whenever the LCK_REFn bit is set in "Register 9–Configuration 3," Section 4.3.10. This output is typically used to enable the receive lock-to-reference mechanism in an external physical layer.

RBC[1:0] **Receive Clock** **Input**
The RBC[1:0] signals clock receive data into the controller on the clock rising edge. RBC[1:0] are 62.5 MHz clocks, 180° out of phase, that clock data into the controller on RX[9:0] at an effective rate of 125 MHz. For the device to acquire synchronization, the comma code must be input on RXD[9:0] on RBC1 rising edges.

RX[9:0] **Receive Data** **Input**
These inputs contain receive data that are clocked in on the rising edges of RBC[1:0].

TBC **Transmit Clock** **Output**
This output clock transmits data out on TX[0:9] on its rising edge. TBC is a 125 MHz clock and is generated from TCLK.

Copyright © 2000–2001 by LSI Logic Corporation. All rights reserved.

TX[9:0] **Transmit Data** **Output**
These interface outputs transmit data on the rising edge of TBC.

3.3 Register Interface Signals

This section describes the 8101/8104 register interface signals.

REGA[7:0] **Register Interface Address** **Input**
These inputs provide the address for the specific internal register to be accessed, and are clocked into the device on the rising edge of REGCLK.

REGCLK **Register Interface Clock** **Input**
This input clocks data in and out on REGD[15:0], REGA[7:0], REGRDn, and REGWRn on its rising edge. REGCLK frequency must be between 5–40 MHz.

REGCSn **Register Interface Chip Select** **Input**
This input must be asserted to enable reading and writing data on REGD[15:0] and REGA[7:0]. This input is clocked in on the rising edge of REGCLK.

REGD[15:0] **Register Interface Data Bus** **Bidirectional**
This bus is a bidirectional 16-bit data path to and from the internal registers. Data is read and written from and to the internal registers on the rising edge of the register clock, REGCLK.

REGINT **Register Interface Interrupt** **Output**
This output is asserted when certain interrupt bits in the registers are set, and it remains latched HIGH until all interrupt bits are read and cleared.

REGRDn **Register Interface Read** **Input**
When this input is asserted, the accessed internal register is read (data is output from the register). This input is clocked into the device on the rising edge of REGCLK.

REGWRn **Register Interface Write** **Input**
When this input is asserted, the accessed internal register is written (data is input to the register). This input is clocked into the device on the rising edge of REGCLK.

Copyright © 2000–2001 by LSI Logic Corporation. All rights reserved.

3.4 Micellaneous Signals

This section describes the 8101/8104 micellaneous signals.

LINKn **Receive Link** **Output**
When this signal is HGH, there is no link. When this signal is asserted, the receive link is synchronized and configured.

RESERVED **Reserved**
These pins are reserved and must be left floating.

RESETn **Reset** **Input**
When this signal is HIGH, controller is in normal operation. When this signal is asserted, controller resets, FIFO's are cleared, counters are cleared, and register bits are set to default values.

SD **Signal Detect** **Input**
When this signal is asserted, data detected on receive 10-bit PHY is valid. When SD is LOW, data is not valid and the 8B10B PCS receiver is forced to a loss of sync state. This signal is ignored (assumed high) unless the SD_EN bit in "Register 9–Configuration 3," Section 4.3.10, is cleared.

TAP **3-state all pins** **Input**
This pin is used for testing purposes only. When asserted, all output and bidirectional pins are placed in a high-impedence state.

TEST **Test Mode** **Input**
This pin is used for factory test and must be tied LOW for proper operation.

TCLK **Transmit Clock** **Input**
This 125 MHz input clock is used by the 8B10B PCS section and generates the 125 MHz transmit output clock, TBC, is used to output data on the 10-bit PHY interface.

Copyright © 2000–2001 by LSI Logic Corporation. All rights reserved.

3.5 Power Supply Signals

This section describes the 8101/8104 power supply signals.

VCC[26:0]	**Positive Supply.** +3.3 V ± 5% Volts	–
GND[26:0]	**Ground** 0 Volts	–

Copyright © 2000–2001 by LSI Logic Corporation. All rights reserved.

Chapter 4
Registers

The 8101/8104 controller has 136 internal 16-bit registers. Twenty-two registers are available for setting configuration inputs and reading status outputs. The remaining 114 registers are associated with the management counters.

This chapter contains the following sections:

- Section 4.1, “Register Interface”
- Section 4.2, “Register Addresses”
- Section 4.3, “Register Definitions”

4.1 Register Interface

The register interface is a 16-bit bidirectional data interface that allows access to the internal registers. The register interface consists of 29 signals:

- Sixteen bidirectional data I/O bits (REGD[15:0])
- Eight register address inputs (REGA[7:0])
- One chip select input (REGCSn)
- One clock input (REGCLK) The REGCLK clock frequency must be between 5–40 MHz.
- One read select input (REGRDn)
- One write select input (REGWRn)
- One interrupt output (REGINT)

All register accesses are done on the rising edge of the REGCLK clock. To access a register through the register interface, REGCSn must be asserted and is sampled on the rising edge of REGCLK. On that same

Copyright © 2000–2001 by LSI Logic Corporation. All rights reserved.

rising edge of REGCLK, the address of the register that is accessed is clocked in on REGA[7:0]. On that same rising edge of REGCLK, either REGRDn or REGWRn must also be asserted. These signals determine whether the register access is a read or write cycle. During a write cycle, the data to be written to a specific register is clocked in on the rising edge of the same clock that clocked in the other inputs. During a read cycle, the data is output on REGD[15:0] some delay after the rising edge of REGCLK that clocked in the input information. REGCSn can remain LOW for multiple REGCLK cycles so that many registers can be read or written during one REGCSn assertion.

During read cycles, the delay from REGCLK to data valid on the REGD[15:0] pins is a function of which register is being accessed. Data read from any register, exclusive of the Counter 1–53 registers, appears on the REGD[15:0] pins in one REGCLK cycle. Data read from the Counter 1–53 registers takes at most six REGCLK cycles to be available on REGD[15:0] for the first 16 bits of the counter result, and at most three REGCLK cycles for the second 16 bits of the counter result. Refer to Chapter 6, Specifications for details of the interface timing characteristics.

4.1.1 Bit Types

The register interface is bidirectional, and there are many types of bits in the registers. The bit type definitions are summarized in Table 4.1. Write bits (W) are inputs during a write cycle and are 0 during read cycles. Read bits (R) are outputs during a read cycle and ignored and high-impedance during a write cycle. Read/Write bits (R/W) are actually write bits that can be read during a read cycle. R/WSC bits are R/W bits that are self clearing after a set period of time or after a specific event has completed. R/LL bits are read bits that latch themselves when they go to 0 and they stay latched until read. After they are read, they are set to 1. R/LH bits are the same as R/LL bits except that they latch to 1. R/LT are read bits that latch themselves whenever they make a transition or change value and they stay latched until they are read. After R/LT bits are read, they are updated to their current value. R/LLI, R/LHI, and R/LTI bits function the same as R/LL, R/LH and R/LT bits, respectively, except they also assert interrupt if programmed to do so (not masked).

Copyright © 2000–2001 by LSI Logic Corporation. All rights reserved.

Table 4.1 Register Bit Type Definition

Bit Types		Definition	
Symbol	**Name**	**Write Cycle**	**Read Cycle**
W	Write	Input	No operation, output not valid
R	Read	No operation, input ignored	Output
R/W	Read/Write	Input	Ouput
R/W SC	Read/Write Self Clearing	Input Clears itself after operation completed	Ouput
R/LL R/LLI	Read, Latch when 0 Read, Latch when 0, Assert Interrupt	No operation latching	Output Input ignored when bit goes to 0, bit latched, and interrupt asserted (if not masked) When bit is read, bit updated and interrupt cleared
R/LH R/LHI	Read/write Read/write, latch HIGH with interrupt	No operation, input ignored	Output When bit goes to 1, bit latched & interrupt asserted (if not masked) When bit is read, bit updated and interrupt cleared
R/LT R/LTI	Read, Latch on Transition Read, Latch on Transition with interrupt	No operation, input ignored	Output When bit transitions, bit latched and interrupt asserted (if not masked) When bit is read, bit updated and interrupt cleared

4.1.2 Interrupt

An interrupt is triggered when certain output status bits change state. These bits are called interrupt bits and are designated as R/LLI, R/LHI, and R/LTI bits, as described in the previous section. The interrupt bits reside in “Register 11–Status 1," Section 4.3.12, and “Register 112–115–Counter Half Full 1-4," Section 4.3.23,. Interrupt bits automatically latch

Copyright © 2000–2001 by LSI Logic Corporation. All rights reserved.

themselves and assert the interrupt pin, REGINT. Interrupt bits stay latched until they are read. When interrupt bits are read, the interrupt pin REGINT is deasserted and the interrupt bits that caused the interrupt are updated to their current value.

Each interrupt bit can be individually masked and subsequently removed as an interrupt bit. Setting the appropriate mask register bits in "Register 14–Status Mask 1," Section 4.3.13, register and "Registers 120–123–Counter Half Full Mask 1-4," Section 4.3.24, preform this function.

4.1.3 Register Structure

The Controller has 136 internal 16-bit registers. 22 registers are available for setting configuration inputs and reading status outputs. The remaining 114 registers are associated with the management counters. The location of all registers is described in Table 4.2 Register Address Table. The definition of each bit for each register is described in Section 4.3.1 through Section 4.3.25.

4.2 Register Addresses

Table 4.2 lists the register number, register address, register name, and the paragraph that describes the register. Table 4.3 lists the register default values.

Table 4.2 Register Addresses

Register Numbers	Register Address (REGAD[7:0] Pins)	Register Name	Paragraph Number
0	0b00000000	MAC Address 1	4.3.1
1	0b00000001	MAC Address 2	4.3.2
2	0b00000010	MAC Address 3	4.3.3
3	0b00000011	MAC Address Filter 1	4.3.4
4	0b00000100	MAC Address Filter 2	4.3.5
5	0b00000101	MAC Address Filter 3	4.3.6

Copyright © 2000–2001 by LSI Logic Corporation. All rights reserved.

Table 4.2 Register Addresses (Cont.)

Register Numbers	Register Address (REGAD[7:0] Pins)	Register Name	Paragraph Number
6	0b00000110	MAC Address Filter 4	4.3.7
7	0b00000111	Configuration 1	4.3.8
8	0b00001000	Configuration 2	4.3.9
9	0b00001001	Configuration 3	4.3.10
10	0b00001010	Configuration 4	4.3.11
11	0b00001011	Status 1	4.3.12
12–13	0b00001100–0b00001101	Reserved	
14	0b00001110	Status Mask 1	4.3.13
15–16	0b00001111–0b00010000	Reserved	
17	0b00010001	Transmit FIFO Threshold	4.3.14
18	0b00010010	Receive FIFO Threshold	4.3.15
19	0b00010011	Flow Control 1	4.3.16
20	0b00010100	Flow Control 2	4.3.17
21	0b00010101	AutoNegotiation Base Page Transmit	4.3.18
22	0b00010110	AutoNegotiation Base Page Receive	4.3.19
23	0b00010111	AutoNegotiation Next Page Transmit	4.3.20
24	0b00011000	AutoNegotiation Next Page Receive	4.3.21
25–31	0b00011001–0b00011111	Reserved	
32	0b00100000	Device ID	4.3.22
33–111	0b00011001–0b01101111	Reserved	
112–115	0b01110000–0b01110011	Counter Half Full 1–4	4.3.23

Copyright © 2000–2001 by LSI Logic Corporation. All rights reserved.

Table 4.2 Register Addresses (Cont.)

Register Numbers	Register Address (REGAD[7:0] Pins)	Register Name	Paragraph Number
116–119	0b01110100–0b01110111	Reserved	
120–123	0b01111000–0b01111011	Counter Half Full Mask 1–4	4.3.24
124–127	0b01111100–0b01111111	Reserved	
128–129	0b10000000–0b10000001	Counter 1- etherStatsDropEvents	4.3.25
130–131	0b10000010–0b10000011	Counter 2 - etherStatsOctets	4.3.25
132–133	0b10000100–0b10000101	Counter 3 - etherStatsPkts	4.3.25
134–135	0b10000110–0b10000111	Counter 4 - etherStatsBroadcastPkts	4.3.25
136–137	0b10001000–0b10001001	Counter 5 - etherStatsMulticastPkts	4.3.25
138–139	0b10001010–0b10001011	Counter 6 - etherStatsCRCAlignErrors	4.3.25
140–141	0b10001100–0b10001101	Counter 7 - etherStatsUndersizePkts	4.3.25
142–143	0b10001110–0b10001111	Counter 8 - etherStatsOversizePkts	4.3.25
144–145	0b10010000–0b10010001	Counter 9 - etherStatsFragments	4.3.25
146–147	0b10010010–0b10010011	Counter 10 - etherStatsJabber	4.3.25
148–149	0b10010100–0b10010101	Counter 11 - etherStatsCollisions	4.3.25
150–151	0b10010110–0b10010111	Counter 12 - etherStatsPkts64Octets	4.3.25

Copyright © 2000–2001 by LSI Logic Corporation. All rights reserved.

Table 4.2 Register Addresses (Cont.)

Register Numbers	Register Address (REGAD[7:0] Pins)	Register Name	Paragraph Number
152–153	0b10011000–0b10011001	Counter 13 - etherStatsPkts65to127Octets	4.3.25
154–155	0b10011010–0b10011011	Counter 14 - etherStatsPkts128to255Octets	4.3.25
156–157	0b10011100–0b10011101	Counter 15 - etherStatsPkts256to511Octet	4.3.25
158–159	0b10011110–0b10011111	Counter 16 - etherStatsPkts512to1023Octets	4.3.25
160–161	0b10100000–0b10100001	Counter 17 - etherStatsPkts1024to1518Octets	4.3.25
162–163	0b10100010–0b10100011	Counter 18 - etherStatsOctets_TX	4.3.25
164–165	0b10100100–0b10100101	Counter 19 - etherStatsPkts_TX	4.3.25
166–167	0b10100110–0b10100111	Counter 20 - etherStatsBroadcastPkts_TX	4.3.25
168–169	0b10101000–0b10101001	Counter 21 - etherStatsMulticastPkts_TX	4.3.25
170–171	0b10101010–0b10101011	Counter 22 - etherStatsPkts64Octets_TX	4.3.25
172–173	0b10101100–0b10101101	Counter 23 - etherStatsPkts65to127Octets_TX	4.3.25
174–175	0b10101110–0b10101111	Counter 24 - etherStatsPkts128to255Octets_TX	4.3.25
176–177	0b10110000–0b10110001	Counter 25 - etherStatsPkts256to511Octets_TX	4.3.25
178–179	0b10110010–0b10110011	Counter 26 - etherStatsPkts512to1023Octets_TX	4.3.25
180–181	0b10110100–0b10110101	Counter 27 - etherStatsPkts1024to1518Octets_TX	4.3.25

Copyright © 2000–2001 by LSI Logic Corporation. All rights reserved.

Table 4.2 Register Addresses (Cont.)

Register Numbers	Register Address (REGAD[7:0] Pins)	Register Name	Paragraph Number
182–183	0b10110110–0b10110111	Counter 28 - ifInOctets	4.3.25
184–185	0b10111000–0b10111001	Counter 29 - ifInUcastPkts	4.3.25
186–187	0b10111010–0b10111011	Counter 30 - ifOutOctets	4.3.25
188–189	0b10111100–0b10111101	Counter 31 - ifOutUcastPkts	4.3.25
190–191	0b10111110–0b10111111	Counter 32 - ifOutMulticastPkts	4.3.25
192–193	0b11000000–0b11000001	Counter 33 - ifOutBroadcastPkts	4.3.25
194–195	0b11000010–0b11000011	Counter 34 - ifOutDiscards	4.3.25
196–197	0b11000100–0b11000101	Counter 35 - ifOutErrors	4.3.25
198–199	0b11000110–0b11000111	Counter 36 - dot3StatsAlignmentErrors	4.3.25
200–201	0b11001000–0b11001001	Reserved	
202–203	0b11001010–0b11001011	Counter 38 - dot3StatsSingleCollisionFrames	4.3.25
204–205	0b11001100–0b11001101	Counter 39 - dot3StatsMultipleCollisionFrames	4.3.25
206–207	0b11001110–0b11001111	Counter 40 - dot3StatsSQETestErrors	4.3.25
208–209	0b11010000–0b11010001	Counter 41 - dot3StatsDeferredTransmissions	4.3.25
210–211	0b11010010–0b11010011	Counter 42 - dot3StatsLateCollisions	4.3.25

Copyright © 2000–2001 by LSI Logic Corporation. All rights reserved.

Table 4.2 Register Addresses (Cont.)

Register Numbers	Register Address (REGAD[7:0] Pins)	Register Name	Paragraph Number
212–213	0b11010100–0b11010101	Counter 43 - dot3StatsExcessiveCollisions	4.3.25
214–215	0b11010110–0b11010111	Counter 44 - dot3StatsCarrierSenseErrors	4.3.25
216–217	0b11011000–0b11011001	Counter 45 - aOctetsTransmittedOK	4.3.25
218–219	0b11011010–0b11011011	Counter 46 - aOctetsReceivedOK	4.3.25
220–221	0b11011100–0b11011101	Counter 47 - aFramesWithExcessiveDefferal	4.3.25
222–223	0b11011110–0b11011111	Counter 48 - aInRangeLengthErrors	4.3.25
224–225	0b11100000–0b11100001	Counter 49 - aOutOfRangeLengthField	4.3.25
226–227	0b11100010–0b11100011	Counter 50 - aSymbolErrorDuringCarrier	4.3.25
228–229	0b11100100–0b11100101	Counter 51 - aUnsupportedOpcodesReceived	4.3.25
230–231	0b11100110–0b11100111	Counter 52 - aPauseMACCtrlFramesTransmitted	4.3.25
232–233	0b11101000–0b11101001	Counter 53 - aPauseMACCtrlFramesReceived	4.3.25
234–255	0b11101010–0b11111111	Reserved	

Copyright © 2000–2001 by LSI Logic Corporation. All rights reserved.

Table 4.3 Register Default Values

Register Numbers	Register Address (REGAD[7:0] Pins)	Register Name	Default (Hex)
0	0b00000000	MAC Address 1	0x0000
1	0b00000001	MAC Address 2	0x0000
2	0b00000010	MAC Address 3	0x0000
3	0b00000011	MAC Address Filter 1	0x0000
4	0b00000100	MAC Address Filter 2	0x0000
5	0b00000101	MAC Address Filter 3	0x0000
6	0b00000110	MAC Address Filter 4	0x0000
7	0b00000111	Configuration 1	0x03F2
8	0b00001000	Configuration 2	0x07E5
9	0b00001001	Configuration 3	0x07E0
10	0b00001010	Configuration 4	0x0000
11	0b00001011	Status 1	0x0000
12–13	0b00001100–0b00001101	Reserved	
14	0b00001110	Status Mask 1	0xFFFF
15–16	0b00001111–0b00010000	Reserved	
17	0b00010001	Transmit FIFO Threshold	0x8620
18	0b00010010	Receive FIFO Threshold	0x00C0
19	0b00010011	Flow Control 1	ox9800
20	0b00010100	Flow Control 2	0xF000
21	0b00010101	AutoNegotiation Base Page Transmit	0x00A0
22	0b00010110	AutoNegotiation Base Page Receive	0x0000
23	0b00010111	AutoNegotiation Next Page Transmit	0x0000
24	0b00011000	AutoNegotiation Next Page Receive	0x0000
25–31	0b00011001–0b00011111	Reserved	
32	0b00100000	Device ID	0x1000

Copyright © 2000–2001 by LSI Logic Corporation. All rights reserved.

Table 4.3 Register Default Values (Cont.)

Register Numbers	Register Address (REGAD[7:0] Pins)	Register Name	Default (Hex)
33–111	0b00011001–0b01101111	Reserved	
112–115	0b01110000–0b01110011	Counter Half Full 1–4	0x0000
116–119	0b01110100–0b01110111	Reserved	
120–123	0b01111000–0b01111011	Counter Half Full Mask 1–4	oxFFFF
124–127	0b01111100–0b01111111	Reserved	
128–233	0b10000000–0b11101001	Counter 1-53 32-bit Management Counters	0x0000
234–255	0b11101010–0b11111111	Reserved	

4.3 Register Definitions

The following paragraphs describe the 8101/8104 internal registers.

4.3.1 Register 0–MAC Address 1

15	0
A[47:32]	

Note: A[47] 15-bit occurs on the REGD15 pin.

A[47:32] **MAC Address, First Word** **[15:0], R/W**
This is the fist of three words in the 48-bit MAC address.

The MAC address is used to receive unicast address filtering of the DA, and serves as the SA for automatically generated MAC control pause frames.

A0 (see Register 2) corresponds to the first bit transmitted or received by the MAC section (DA[0] or SA[0] in Figure 2.3).

Copyright © 2000–2001 by LSI Logic Corporation. All rights reserved.

4.3.2 Register 1–MAC Address 2

15	0
A[31:16]	

Note: A[31] 15-bit occurs on the REGD15 pin.

A[31:16] **MAC Address, Second Word** **[15:0], R/W**
This is the second of three words in the 48-bit MAC address.

The MAC address is used to receive unicast address filtering of the DA, and serves as the SA for automatically generated MAC control pause frames.

A0 (see Register 2) corresponds to the first bit transmitted or received by the MAC section (DA[0] or SA[0] in Figure 2.3.

4.3.3 Register 2–MAC Address 3

15	0
A[15:0]	

Note: A[15] 15-bit occurs on the REGD15 pin.

A[15:0] **MAC Address, Third Word** **[15:0], R/W**
This is the third of three words that comprise the 48-bit MAC address.

The MAC address is used to receive unicast address filtering of the DA, and serves as the SA for automatically generated MAC control pause frames.

A0 corresponds to the first bit transmitted or received by the MAC section (DA[0] or SA[0] in Figure 2.3).

4.3.4 Register 3–MAC Address Filter 1

15	8
F7[7:0]	

Copyright © 2000–2001 by LSI Logic Corporation. All rights reserved.

7	0
F6[7:0]	

Note: F7[7] 15-bit occurs on the REGD15 pin.

F7[7:0], F6[7:0]

MAC Address Filter **[15:0], R/W**

This is the first of four words in the 64-bit MAC address filter.

The MAC address filter is used to filter the destination address on multicast packets.

4.3.5 Register 4–MAC Address Filter 2

15	8
F5[7:0]	

7	0
F4[7:0]	

Note: F5[7] 15-bit occurs on the REGD15 pin.

F5[7:0], F4[7:0]

MAC Address Filter **[15:0], R/W**

This is the second of four words in the 64-bit MAC address filter.

The MAC address filter is used to filter the destination address on multicast packets.

Copyright © 2000–2001 by LSI Logic Corporation. All rights reserved.

4.3.6 Register 5–MAC Address Filter 3

15	8
F3[7:0]	

7	0
F2[7:0]	

Note: F3[7] 15-bit occurs on the REGD15 pin

F3[7:0], F2[7:0]

MAC Address Filter **[15:0], R/W**

This is the third of four words in the 64-bit MAC address filter.

The MAC address filter is used to filter the destination address on multicast packets.

4.3.7 Register 6–MAC Address Filter 4

15	8
F1[7:0]	

7	0
F0[7:0]	

Note: F1[7] 15-bit occurs on the REGD15 pin

F1[7:0], F0[7:0]

MAC Address Filter **[15:0], R/W**

This is the fourth of four words in the 64-bit MAC address filter.

The MAC address filter is used to filter the destination address on multicast packets.

Copyright © 2000–2001 by LSI Logic Corporation. All rights reserved.

4.3.8 Register 7–Configuration 1

15	14	13	12	11	10	9	8
RST	RXRST	TXRST	ANRST	CTRRST	APAD	IPG[2:1]	

7	6	5	4	3	2	1	0
IPG[0]	TXPRMBL	TXCRC	RXPRMBL	RXCRC	STSWRD1	STSWRD0	PEOF

Note: RST 15-bit occurs on the REGD15 pin

RST **Reset** **15, R/WSC**

RST	Description
1	Controller is reset; it self-clears in 1 µs
0	Nominal operation

RXRST **Receive Reset** **14, R/WSC**

RXRST	Description
1	Receive data path reset, self-clears when the start of the new packet is detected
0	Normal

TXRST **Transmit Reset** **13, R/WSC**

TXRST	Description
1	Transmit data, data reset, self-clearing in 1 µs
0	Normal

ANRST **AutoNegotiation Restart** **12, R/WSC**

ANRST	Description
1	AutoNegotiation algorithm restarted, self-clearing after AutoNegotiation process starts
0	No Reset

CTRRST **Counter Reset** **11, R/WSC**

CTRRST	Description
1	All counters reset to 0, self-clearing in 1 µs
0	No reset

Copyright © 2000–2001 by LSI Logic Corporation. All rights reserved.

APAD **AutoPad Enable** **10, R/W**

APAD	Description
1	All undersize transmit packets padded to 64 bytes
0	No autopad

IPG[2:0] **Transmit Interpacket Gap Select** **[9:7], R/W**

IPG[2:0]	Description
111	Tranmsit IPG is 96 bits (IEEE specification minimum)
110	Transmit IPG is 122 bits
101	Transmit IPG is 80 bits
100	Transmit IPG is 64 bits
011	Transmit IPG is 192 bits-(2 x IEEE specification minimum)
010	Transmit IPG is 384 bits-(4 x IEEE specification minimum)
001	Transmit IPG is 768 bits-(8 x IEEE specification minimum)
000	Transmit IPG is 32 bits

TXPRMBL **Transmit Preamble Enable** **6, R/W**

TXPRMBL	Description
1	Preamble added to beginning of transmit packet
0	Preamble not added

TXCRC **Transmit CRC Enable** **5, R/W**

TXCRC	Description
1	CRC calculated and added to end of transmit packet
0	CRC not added

RXPRMBL **Receive Preamble Enable** **4, R/W**

RXPRMBL	Description
1	Preamble is stored in RX FIFO with rest of packet
0	Preamble stripped off

Copyright © 2000–2001 by LSI Logic Corporation. All rights reserved.

RXCRC **Receive CRC Enable** **3, R/W**

RXCRC	Description
1	CRC is stored in RX FIFO with rest of packet
0	CRC stripped off

STSWRD[1:0] **Receive Status Word Append Select** **[2:1], R/W**

STSWRD[1:0]	Description
11	Reserved
10	Receive status word for nondiscarded packets and discarded packets
01	Receive status word for nondiscarded packets
00	No receive status word

PEOF **Receive EOF Position Select** **0, R/W**

PEOF	Description
1	Receive EOF at end of packet data
0	Receive EOF at end of receive status word

4.3.9 Register 8–Configuration 2

15	14	13	12	11	10	9	8
REJUCST	REJMCST	REJBCST	REJALL	ACPTALL	DIS_OVF	DIS_CRC	DIS_USIZE

7	6	5	4 … 0
DIS_OSIZE	DIS_CWRD	DIS_RXAB	RES = 0

Note: REJUCST 15-bit occurs on the REGD15 pin

REJUCST **Receive Unicast Packets Reject** **15, R/W**

REJUCST	Description
1	Receiver rejects all unicast packets
0	Accept unicast packet if DA value in registers [0:2]

Copyright © 2000–2001 by LSI Logic Corporation. All rights reserved.

REJMCST **Receive Multicast Packets Reject** **14, R/W**

REJMCST	Description
1	Receiver rejects all multicast packets
0	Accept multicast packet if DA passes MAC address filter

REJBCST **Receive Broadcast Packets Reject** **13, R/W**

REJBCST	Description
1	Receiver rejects all broadcast packets
0	Accept broadcast packet

REJALL **Receive All Packet Reject** **12, R/W**

REJALL	Description
1	Receiver rejects all packets
0	Normal

ACPTALL **Receive All Packets Enable** **11, R/W**

ACPTALL	Description
1	Receiver accepts all packets regardless of address (not including MAC control frames)
0	Normal

DIS_OVF **Discard Overflow Packet Enable** **10, R/W**

DIS_OVF	Description
1	Discard receive packet with receive FIFO overflow error
0	No discard

DIS_CRC **Discard CRC Error Packet Enable** **9, R/W**

DIS_CRC	Description
1	Discard receive packet with CRC error
0	No discard

Copyright © 2000–2001 by LSI Logic Corporation. All rights reserved.

DIS_USIZE **Discard Undersize Packet Enable** **8, R/W**

DIS_USIZE	Description
1	Discard receive undersize packet
0	No discard

DIS_OSIZE **Discard Oversize Packet Enable** **7, R/W**

DIS_OSIZE	Description
1	Discard receive oversize packet
0	No discard

Note: Clearing this bit to 0 allows maximum packet size to be unlimited in length.

DIS_CWRD **Discard Codeword Error Packet Enable** **6, R/W**

DIS_CWRD	Description
1	Discard receive packets that contain PCS codeword error
0	No discard

DIS_RXAB **Discard RXABORT Packet Enable** **5, R/W**

DIS_RXAB	Description
1	Discard receive packets that are aborted with RXABORT
0	No discard (i.e. RXABORT pin is disabled)

RES **Reserved** **[4:0], R/W**
Must be left at default value or written to 0 for proper operation.

4.3.10 Register 9–Configuration 3

15	14	13	12	11	10	9	8
RES		AUTOCLR	AUTORXAB	CTR_RD	CTR_ROLL	EWRAP	LCKREF

7	6	5	4	3	2	1	0
CDET	AN_EN	RMXPKT1	RMXPKT2	RXAB_DEF	SINTF_DIS	FCNTRL_DIS	SD_EN

Note: RES 15-bit occurs on the REGD15 pin

Copyright © 2000–2001 by LSI Logic Corporation. All rights reserved.

RES **Reserved** **[15:14], R/W**

Must be left at default value or written to 0 for proper operation.

AUTOCLR **AutoClear Mode Enable** **13, R/W**

AUTOCLR	Description
1	TXDC and RXDC automatically cleared at next EOF
0	TXDC and RXDC cleared by CLR_TXDC and CLR_RXDC pins, respectively

AUTORXAB **AutoAbort Enable** **12, R/W**

AUTORXAB	Description
1	Current packet aborted and RXDC automatically cleared at next EOF
0	No Abort

CTR_RD **Counter Reset On Read Enable** **11, R/W**

CTR_RD	Description
1	Counters reset to 0 when read
0	Counters not reset when read (only if count < maximum count)

CTR_ROLL **Counter Rollover Enable** **10, R/W**

CTR_ROLL	Description
1	Counters rollover to 0 after maximum count
0	Counters stop at maximum count

EWRAP **EWRAP Pin Assert** **9, R/W**

EWRAP	Description
1	EWRAP pin is asserted active HIGH
0	Deassert

LCKREF **LCKREFn Pin Assert** **8, R/W**

LCKREF	Description
1	LCKREFn pin is asserted
0	Deassert

Copyright © 2000–2001 by LSI Logic Corporation. All rights reserved.

CDET **EN_CEDT Pin Assert** **7, R/W**

CDET	Description
1	EN_CDET pin is asserted active HIGH
0	EN_CDET pin is controlled by receive PCS state machine

AN_EN **AutoNegotiation Enable** **6, R/W**

AN_EN	Description
1	AutoNegotiation algorithm enabled
0	Disabled

RMXPKT[1:0] **Receive MAC Maximum Packet Size Select** **[5:4], R/W**

RMXPKT[1:0]	Description
11	Reserved
10	1535 Bytes
01	1522 Bytes
00	1518 Bytes

Note: Max packet size is unlimited if bit 7 = 0

RXAB_DEF **RXABORT Pin Definition** **3, R/W**

RXAB_DEF	Description
1	RXABORT pin and autoabort feature discards data
0	RXABORT pin and autoabort feature discards data and status word

SINTF_DIS **System Interface Disable** **2, R/W**

SINTF_DIS	Description
1	System interface disabled (see system interface section)
0	Normal

Copyright © 2000–2001 by LSI Logic Corporation. All rights reserved.

FCNTRL_DIS **FCNTRL Pin** **1, R/W**

FCNTRL_DIS	Description
1	FCNTRL pin disabled (does not cause autogenerated pause frame transmission).
0	Enabled

SD_EN **Signal Detect Pin Enable** **0, R/W**

SD_EN	Description
1	Enabled
0	SD pin disabled, i.e., internal SD always asserted, does not affect receive word synchronization

4.3.11 Register 10–Configuration 4

15	14	13	12	11	10	9 8	7	6	5 0
ENDIAN	BUSSIZE	RES	LPBK	LNKDN	TBC_DIS	RES	CMXPKT1	CMXPKT0	RES

Note: ENDIAN 15-bit occurs on the REGD15 pin

ENDIAN **Endian Select** **15, R/W**

ENDIAN	Description
1	RXD/TXD data in big endian format
0	RXD/TXD data in little endian format

BUSSIZE **Bus Size Word Width** **14, R/W**

BUSSIZE	Description
1	Receive system bus word width is 16 bits
0	Receive system bus word width is 32 bits

RES **Reserved** **13, [9:8], [5:0], R/W**

Must be left at default value or written to 0 for proper device operation.

LPBK **Loopback Enable** **12, R/W**

LPBK	Description
1	Loopback mode enabled
0	Normal

Copyright © 2000–2001 by LSI Logic Corporation. All rights reserved.

LNKDN **Link Down FIFO Flush Enable** **11, R/W**

LNKDN	Description
1	When receive link is down, data exiting the TX FIFO is discarded
0	Normal

TBC_DIS **TX Disable** **10, R/W**

TBC_DIS	Description
1	TBC, TX [9:0] outputs disabled (high impedance)
0	Enabled

RES **Reserved** **[9:8], [5:0] R/W**
Must be left at default value or written to 0 for proper device operation.

CMXPKT[1:0] **Counter Max Packet Size Select** **[7:6], R/W**

CMXPKT[1:0]	Description
11	Unlimited
10	1535 bytes
01	1522 bytes
00	1518 bytes

4.3.12 Register 11–Status 1

15	14 13	12	11	10 8	7	6	5	4	3	2 0
RSYNC	RES	SD	LINK	RES	AN_NP	AN_TX_NP	AN_RX_NP	AN_RX_BP	AN_RMTRST	RES

Note: RSYNC 15-bit occurs on the REGD15 pin

RSYNC **Receive Word Synchronization Detect** **15, R/LTI**

RSYNC	Description
1	Receive 8B10B PCS has acquired word synchronization
0	Not synchronized

RES **Reserved** **[14:13], [10:8], [2:0]**
Must be left at default value or written to 0 for proper device operation.

Copyright © 2000–2001 by LSI Logic Corporation. All rights reserved.

SD **Signal Detect Pin Status** **12, R**

SD	Description
1	SD input pin HIGH
0	SD input pin LOW

LINK **Link Detect Status** **11, R/LTI**

LINK	Description
1	Link pass (receiver in sync, AutoNegotiation done)
0	Link fail

AN_NP **AutoNegotiation Next Page Status** **7, R/LHI**

AN_NP	Description
1	One next page exchange done (both RX and TX)
0	Not done

AN_TX_NP **AutoNegotiation TX Next Page Status** **6, R**

AN_TX_NP	Description
1	Transmission of next page done
0	Not done

AN_RX_NP **AutoNegotiation RX Next Page Status** **5, R**

AN_RX_NP	Description
1	Reception of next page done, next page valid
0	Not done

AN_RX_BP **AutoNegotiation RX Base Page Status** **4, R**

AN_RX_BP	Description
1	Reception of base page done, base page valid
0	Not done

AN_RMTRST **AutoNegotiation Remote Restart Status** **3, R/LHI**

AN_RMTRST	Description
1	AutoNegotiation restarted because remote end sent restart codes or invalid characters
0	Normal

Copyright © 2000–2001 by LSI Logic Corporation. All rights reserved.

4.3.13 Register 14–Status Mask 1

15	14 12	11	10 8	7	6 4	3	2 0
MASK_RSYNC	RES = 1	MASK_LINK	RES = 1	MASK_AN_NP	RES = 1	MASK_AN_RMTRST	RES = 1

Note: MASK_RSYNC 15-bit occurs on the REGD15 pin

MASK_RSYNC

Interrupt Mask - Receive Word Synchronization Detect **15, R/W**

MASK_RSYNC	Description
1	Mask interrupt for RSYNC in Register 11
0	No mask

RES **Reserved** **[14:12], [10:8], [6:4], [2:0], R/W**

Must be left at default value or written to 1 for proper device operation.

MASK_LINK **Interrupt Mask - Link Status Detect** **11, R/W**

MASK_LINK	Description
1	Mask interrupt for LINK in Register 11
0	No mask

MASK_AN_NP

Interrupt Mask - AutoNegotiation Next Page Status **7, R/W**

MASK_AN_NP	Description
1	Mask interrupt for AN_NP in Register 11
0	No mask

MASK_AN_RMTRST

Interrupt Mask - AutoNegotiation Remote Restart Status **3, R/W**

MASK_AN_RMTRST	Description
1	Mask interrupt for AN_RMTRST in Register 11
0	No mask

Copyright © 2000–2001 by LSI Logic Corporation. All rights reserved.

4.3.14 Register 17–Transmit FIFO Threshold

15 – 11	10 – 6	5 – 0
TWM1[4:0]	TWM2[4:0]	TASND[5:0]

Note: TWM1[4] 15-bit occurs on the REGD15 pin

TWM1[4:0] Transmit FIFO Watermark 1 Threshold [15:11], R/W

TWM1[4:0]	Description
Range	0–1024 words (0–4096 bytes)
Increment	32 words (128 bytes)
11111	Reserved, do not use
11110	992 words in FIFO (3968 bytes)
11101	960 words in FIFO (3840 bytes
⋮	
00001	64 words in FIFO (256 bytes)
00000	32 words in FIFO (128 bytes)

TWM2[4:0] Transmit FIFO Watermark 2 Threshold [10:6], R/W

TWM2[4:0]	Description
Range	0–1024 words (0–4096 bytes)
Increment	32 words (128 bytes)
11111	Reserved, do not use
11110	992 words in FIFO (3968 bytes)
11101	960 words in FIFO (3840 bytes)
⋮	
00001	64 words in FIFO (256 bytes)
00000	32 words in FIFO (128 bytes)

Copyright © 2000–2001 by LSI Logic Corporation. All rights reserved.

TASND[5:0] Transmit FIFO AutoSend Threshold [5:0], R/W

TASND[5:0]	Description
Range	0–1024 words (0–4096 bytes)
Increment	8 words (32 bytes)
111111	Reserved do not use
111110	Transmit starts when 504 words in FIFO
⋮	
000010	Transmit starts when 24 words in FIFO
000001	Transmit starts when 16 words in FIFO
000000	Transmit starts when 992 words in FIFO

Note 1: An EOF written into FIFO also starts transmission of that packet regardless of the AutoSend threshold setting.

Note 2: The 0b000000 setting in TASND[5:0] lets the FIFO fill up before transmission starts, facilitating transmission of oversize packets.

4.3.15 Register 18–Receive FIFO Threshold

15 – 8	7 – 0
RWM1[7:0]	RWM2[7:0]

Note: RWM1[15] 15-bit occurs on REGD15 pin.

RWM1[7:0] Receive FIFO Watermark 1 Threshold [15:8], R/W

RWM1[7:0]	Description
Range	0–4096 words (0–16386 bytes)
Increment	16 words (64 bytes)
11111111	Reserved, do not use
11111110	4080 words in FIFO (16320 bytes)
11111110	4064 words in FIFO (16256 bytes)
⋮	
00000001	32 words in FIFO (128 bytes)
00000000	16 words in FIFO (64 bytes)

Copyright © 2000–2001 by LSI Logic Corporation. All rights reserved.

RWM2[7:0] **Receive FIFO Increment = 16 Words (64 Bytes) Watermark 2 Threshold** **[7:0], R/W**

RWM2[7:0]	Description
Range	0–4096 words (0–16386 bytes)
11111111	Reserved, do not use
11111110	4080 words in FIFO (16320 bytes)
11111110	4064 words in FIFO (16256 bytes)
⋮	
00000001	32 words in FIFO (128 bytes)
00000000	16 words in FIFO (64 bytes)

4.3.16 Register 19–Flow Control 1

15	14 13	12	11	10 7	6 0
MCNTRL	MCPASS[1:0]	MCFLTR	MCENDPS	MCASND[3:0]	RES = 0

Note: MCNTRL 15-bit occurs on REGD15 pin

MCNTRL **MAC Control Frame Enable** **15, R/W**

MCNTRL	Description
1	Valid receive MAC control frames cause the transmitter to pause (flow control enabled)
0	Transmitter not paused (flow control disable)

MCPASS[1:0]

MAC Control Frame Pass Through Enable **[14:13], R/W**

MCPASS[1:0]	Description
11	Valid MAC control frame that have pause opcode are passed through to receive FIFO
10	Valid MAC control frames that have any opcode are passed through to receive FIFO
01	Valid MAC control frames that have nonpause opcode are passed through to receive FIFO
00	MAC control frames are not passed through to receive FIFO

Copyright © 2000–2001 by LSI Logic Corporation. All rights reserved.

MCFLTR **MAC Control Frame Address Filter Enable** **12, R/W**

MCFLTR	Description
1	Use reserved multicast address or station address as the DA to determine MAC control pause frame validity
0	Use any address as the DA to determine MAC control pause frame validity

MCENDPS **MAC Control Frame End Pause Enable** **11, R/W**

MCENDPS	Description
1	When FNCTRL is deasserted, send transmit MAC control frame with pause_time = 0
0	Normal

MCASND[3:0]

MAC Control Frame AutoSend Threshold **[10:7], R/W**

These bits determine the receive FIFO threshold, which causes the automatic transmission of pause frames. Autogenerated pause frame transmission is also affected by the FCNTRL pin and bit 1.

MCASND[3:0]	Description
1111	15360 bytes
⋮	
0010	2048 bytes
0001	1024 bytes
0000	Disabled, i.e. RX FIFO data does not cause autogenerated pause frame transmission.

RES **Reserved** **[6:0], R/W**

Must be left at defaults or written to 0 for proper operation.

4.3.17 Register 20–Flow Control 2

15	0
P[15:0]	

Note: P15 15-bit occurs on REGD15 pin

Copyright © 2000–2001 by LSI Logic Corporation. All rights reserved.

P[15:0] **Pause Time** **[15:0], R/W**

The contents of this register are inserted into the pause_time parameter field of all autogenerated transmit MAC control pause frames. Upon successful reception of these autogenerated pause frames, a remote device does not transmit data for a time interval equal to the decimal value of this register times 512 ns.

P0 is the LSB.

Any pause time value less than or equal to 0x32 is sent as 0x32.

4.3.18 Register 21–AutoNegotiation Base Page Transmit

15	14	13 12	11 9	8	7	6	5	4 0
NP	ACK	RF[2:1]	RES	PS_DIR	PS	HDX	FDX	RES

Note: NP 15-bit occurs on REGD15 pin

NP **Next Page Enable** **15, R/W**

NP	Description
1	Next page exists
0	No next page

ACK **Acknowledge** **14, R/W**

ACK	Description
1	Received AutoNegotiation word recognized
0	Not recognized

Note: Writing this bit has no effect on device operation. The transmitted bit is controlled by internal state machine.

RF[2:1] **Remote Fault** **[13:12], R/W**

RF[2:1]	Description
11	AutoNegotiation error
10	Offline
01	Link failure
00	No error, link OK

Copyright © 2000–2001 by LSI Logic Corporation. All rights reserved.

RES **Reserved** **[11:9], R/W**

Reserved for future IEEE use

PS_DIR PS **Pause Capable** **[8:7], R/W**

PS_DIR PS	Description
11	Capable of receive pause only
10	Capable of transmit pause only
01	Capable of transmit and receive pause
00	Not capable

HDX **Half-Duplex Capable** **6, R/W**

HDX	Description
1	Capable of half duplex
0	Not capable

FDX **Full-Duplex Capable** **5, R/W**

FDX	Description
1	Capable of full duplex
0	Not capable

RES Reserved **[4:0], R/W**

Reserved for future IEEE use.

4.3.19 Register 22–AutoNegotiation Base Page Receive

15	14	13 12	11 9	8	7	6	5	4 0
NP	ACK	RF[2:1]	RES	PS_DIR	PS	HDX	FDX	RES

Note: NP 15-bit occurs on the REGD15 pin.

NP **Next Page Enable** **15, R**

NP	Description
1	Next page exists
0	No next page

Copyright © 2000–2001 by LSI Logic Corporation. All rights reserved.

ACK **Acknowledge** **14, R**

ACK	Description
1	Received AutoNegotiation word recognized
0	Not recognized

RF[2:1] **Remote Fault** **[13:12], R**

RF[2:1]	Description
11	AutoNegotiation error
10	Offline
01	Link failure
00	No error, link OK

RES **Reserved** **[11:9], [4:0], R**

Reserved for future IEEE use.

PS_DIR, PS **Pause Capable** **[8:7], R**

PS_DIR, PS	Description
11	Capable of receive pause only
10	Capable of transmit pause only
01	Capable of transmit and receive pause only
00	Not capable

HDX **Half-Duplex Capable** **6, R**

HDX	Description
1	Capable of half-duplex
0	Not capable

FDX **Full-Duplex Capable** **5, R**

FDX	Description
1	Capable of full-duplex
0	Not capable

Copyright © 2000–2001 by LSI Logic Corporation. All rights reserved.

4.3.20 Register 23–AutoNegotiation Next Page Transmit

15	14	13	12	11	10 … 0
NP	ACK	PAGETYPE	ACK2	TOGGLE	MSG[10:0]

Note: NP 15-bit occurs on REGD15 pin

NP **Next Page Enable** **15, R/W**

NP	Description
1	Additional next page exists
0	This is the last next page

ACK **Acknowledge** **14, R/W**

ACK	Description
1	Received AutoNegotiation word recognized
0	Not recognized

Note: Writing this bit has no effect on device operation. The transmitted bit is controlled by internal state machine.

PAGE **Page Type** **13, R/W**

PAGE	Description
1	Message page
0	Unformatted page

ACK2 **Acknowledge 2** **12, R/W**

ACK2	Description
1	Able to comply with the received message
0	Not able to comply

Copyright © 2000–2001 by LSI Logic Corporation. All rights reserved.

TOGGLE **Toggle Bit** **11, R/W**

TOGGLE	Description
1	Value of the toggle bit in previously transmitted AutoNegotiation word was 0
0	Value of the toggle bit in previously transmitted AutoNegotiation word was 1

Note: Writing this bit has no effect on device operation. The transmitted bit is controlled by internal state machine.

MSG[10:0] **Message** **[10:0], R/W**
These bits carry the 11-bit message associated with this next page. Refer to IEEE 802.3z specifications for details on the format and definition of these bits.

4.3.21 Register 24–AutoNegotiation Next Page Receive

15	14	13	12	11	10 … 0
NP	ACK	PAGETYPE	ACK2	TOGGLE	MSG[10:0]

Note: NP 15-bit occurs on the REGD15 pin

NP **Next Page Enable** **15, R**

NP	Description
1	Additional next page exists
0	This is last next page

ACK **Acknowledge** **14, R**

ACK	Description
1	Received AutoNegotiation word recognized
0	Not recognized

PAGETYPE **Page Type** **13, R**

PAGETYPE	Description
1	Message page
0	Unformatted page

Copyright © 2000–2001 by LSI Logic Corporation. All rights reserved.

ACK2 **Acknowledge 2** **12, R**

ACK2	Description
1	Able to comply with the received message
0	Not able to comply

TOGGLE **Toggle Bit** **11, R**

TOGGLE	Description
1	Value of the toggle bit in previous transmitted AutoNegotiation word was 0
0	Value of the toggle bit in previous transmitted AutoNegotiation word was 1

MSG[10:0] **Message** **[10:0], R**
These bits carry the 11-bit message associated with this next page. Refer to the IEEE 802.3z specifications for details on the format and definition of these bits.

4.3.22 Register 32–Device ID

15 12	11 8	7 4	3 0
PART[3:0]	HREV[3:0]	RES	SREV[3:0]

Note: PART[3] 15-bit occurs on the REGD15 pin.

PART[3:0] **Part Number** **[15:12], R**
This field contains a 4-bit number that uniquely identifies the device.

HREV[3:0] **Hardware Revision Number** **[11:8], R**
This field contains a 4-bit number that identifies that a revision was made to the device and the revision did not affect any register bit definitions.

RES **Reserved** **[7:4], R/W**
Reserved for future use.

SREV[3:0] **Software Revision Number** **[3:0], R/W**
This field contains a 4-bit number that identifies that a revision was made to the device and the revision did affect register bit definitions.

Copyright © 2000–2001 by LSI Logic Corporation. All rights reserved.

4.3.23 Register 112–115–Counter Half Full 1–4

15	0
HFULL[15:0]	

Note: HFULL[15] 15-bit occurs on the REGD15 pin.

HFULL[15:0] Counter Half Full Detect [15:0], R/LHI

These bits indicate when a counter is near overflow is half full. These four registers contain 53 counter half-full detect bits, one bit for each of the 53 counters.

Bit 0 in Counter Half Full Register 0 corresponds to Counter 1 as listed in Table 4.1; bit 15 in Counter Half Full Register 0 corresponds to Counter 16; bit 4 of Counter Half Full Register 4 corresponds to Counter 53.

HFULL[15:0]	Description
1	Counter has reached a count of 0x80000000, (half full).
0	Count < 0x80000000

4.3.24 Registers 120–123–Counter Half Full Mask 1–4

15	0
MASK_HFULL[15:0]	

Note: MASK_HFULL[15] 15-bit occurs on the REGD15 pin

MASK_HFULL[15:0]

Counter Half Full Detect Mask [15:0], R/W

The MASK_HFULL[15:0] bits mask (disable) the interrupt caused by the counter half-full detect bits. These four registers contain 53 mask bits, one bit for each of the 53 half-full detect bits.

Bit 0 in Counter Half Full Mask Register 0 masks the interrupt caused by the half full detect bit for Counter 1; bit 15 in Counter Half Full Mask Register 0 corresponds to Counter 16; bit 4 in Counter Half Full Mask Register 3 corresponds to Counter 53.

Copyright © 2000–2001 by LSI Logic Corporation. All rights reserved.

MASK_HFULL[15:0]	Description
1	Mask (disable) the interrupt caused by the corresponding Counter Half Full Detect Bit.
0	No mask

4.3.25 Registers 128–233–Counter 1–53

15	0
C[15:0]	

Note: C15 15-bit occurs on the REGD15 pin.

C[15:0] **Counter Result Value** **[15:0], R**

These 106 registers contain the results of the 53 32-bit management counters.

Each 32-bit counter result value resides in two 16-bit registers. For the two registers associated with each counter, the register with the lower value address always contains the least-significant 16 bits of the counter result. C0 of the lower value address is the counter LSB; C15 of the higher value is the counter MSB.

The definition and register address for each counter is shown in Table 2.14. The register address for each counter is also shown in Table 4.2.

Copyright © 2000–2001 by LSI Logic Corporation. All rights reserved.

Copyright © 2000–2001 by LSI Logic Corporation. All rights reserved.

Chapter 5
Application Information

This Chapter provides application information for the 8101/8104 Gigabit Ethernet Controller. The chapter contains the following sections

- Section 5.1, “Typical Ethernet Port”
- Section 5.2, “10-Bit PHY Interface”
- Section 5.3, “System Interface”
- Section 5.4, “Reset”
- Section 5.5, “Loopback”
- Section 5.6, “AutoNegotiation”
- Section 5.7, “Management Counters”
- Section 5.8, “TX Packet and Octet Counters”
- Section 5.9, “Power Supply Decoupling”

Copyright © 2000–2001 by LSI Logic Corporation. All rights reserved.

5.1 Typical Ethernet Port

A typical example of a Gigabit Ethernet switch port using the 8101/8104 controller is shown in Figure 5.1.

Figure 5.1 Gigabit Ethernet Switch Port Using the 8101/8104

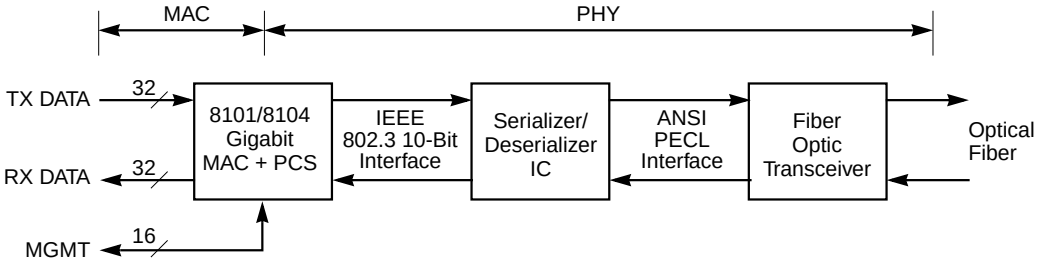

5.2 10-Bit PHY Interface

The 10-bit PHY interface directly couples to any external physical layer device that complies with the IEEE 802.3z or the 10-bit ANSI X3.230 interface standards.

5.2.1 External Physical Layer Devices

In a typical configuration, the controller is connected to an external Serializer/Deserializer (SerDes) Integrated circuit, as shown in Figure 5.1. A list of SerDes devices whose specifications are compatible with and can directly connect to the controller is shown in Table 5.1.

Copyright © 2000–2001 by LSI Logic Corporation. All rights reserved.

Table 5.1 Compatible SerDes Devices

Vendor	Device No.
Vitesse	VSC7135
Hewlett-Packard	HDMP-1636 HDMP-1646
Sony	CXB1589Q
AMCC	52052
TriQuint	TQ9506

5.2.2 Printed Circuit Board Layout

The 10-bit PHY interface clocks data at 125 MHz. The setup and hold times on the timing signals are very short. The outputs are specified assuming a maximum load of only 10 pf. For these reasons, it is imperative that the SerDes or other physical layer device be placed as close as possible to the controller, preferably within one inch. In addition, care should be taken to eliminate any extra loading on all the 10-bit PHY interface signal lines. Also, the clock and data lines in both receive and transmit directions should be routed along the same paths so that they have similar parasitics and delays, to prevent degrading setup and hold times. Termination is not necessary if these precautions are taken.

5.3 System Interface

The system interface requires the selection of watermarks and close attention to printed circuit board layout.

5.3.1 Watermarks

There are two independent watermarks on both the transmit and receive FIFOs. The usage of these watermarks is unspecified and is left to the discretion of the system designer. Below are three examples of watermark usage based on transferring data in any of the following ways:

- Complete packets
- Fixed block sizes
- Variable block sizes

Copyright © 2000–2001 by LSI Logic Corporation. All rights reserved.

5.3.1.1 Complete Packet Watermarks

To transfer data to and from the controller in completed packets, only one watermark is needed. Either transmit watermark could be chosen for this application. On the receive side, RXWM2 should be chosen because it is asserted when a complete packet is loaded into the RX FIFO. The transmit and receive watermark thresholds should preferably be set to a value equal to or larger than the maximum size packet (1518 bytes or greater). On the transmit side, the data is written into the TX FIFO in complete packet bursts when the system requires. On the receive side the data is read out of the RX FIFO beginning with the assertion of RXWM2 and ending when RXEOF is asserted.

5.3.1.2 Fixed Block Watermarks

To transfer data to and from the controller in fixed block sizes (64 bytes at a time, for example), only one watermark is needed. Either transmit watermark could be chosen for this application. On the receive side, RXWM2 should be chosen because it is asserted when a complete packet is loaded into the RX FIFO. The transmit watermark threshold is set to a low value (64 bytes for example), and the receive watermark thresholds preferably are set to a value equal to or greater than the fixed cell size (64 bytes in this example). On the transmit side, the data is written into the TX FIFO in fixed block size bursts when the system requires. When the transmit watermark is deasserted, another block must be written into the TX FIFO. On the receive side, the data is read out of the RX FIFO beginning with the assertion of RXWM2 and ending when the fixed block has been read out (64 bytes in this example) or RXEOF has been asserted.

5.3.1.3 Variable Block Watermarks

To transfer data to and from the controller in variable cell sizes, two watermarks are needed. The TXWM1n and RXWM1 watermark thresholds are set to some low value (64 bytes for this example) while the TXWM2n and RXWM2 watermark thresholds are set to some high value (1024 bytes for example). On the transmit side, the data is written into the TX FIFO when the system requires. If TXWM2n is asserted, the data input must be halted. If TXWM1n is deasserted, the data input must be resumed. In this way, the TX FIFO contents are kept between the high and low watermark thresholds, which potentially increses the external

Copyright © 2000–2001 by LSI Logic Corporation. All rights reserved.

system loading efficiency. Similarly, on the receive side the data must be read out of the RX FIFO when RXWM2 is asserted. If RXWM1 is deasserted, or RXEOF is asserted, the data output must be halted. If RXWM2 is asserted the data output must be resumed. In this way, the RX FIFO contents are kept between the high and low watermarks.

The transmit and receive watermarks can also be used to indicate that the FIFO is full or empty (or almost full or almost empty), if desired.

5.3.2 PCB Layout

Because the data rate of the system interface can be as high as 66 MHz, care should be taken to keep PCB trace lengths of all critical signals as short as possible, preferably less than 2 inches in length. If this guideline is followed termination is not necessary.

5.4 Reset

While the device is being reset, it transmits valid 10B symbols out of the 10-bit PHY interface on TXD[0:9] and TBC. If the device is reset with the RESETn pin for a long period of time, these 10B symbols may be mistakenly decoded as valid packet information and fill up the memory in a remote device. The reset procedure outlined in Table 5.2 avoids this situation and is recommended for use when the RESETn pin is asserted for long periods of time. When the reset bit is used for device reset the above situation is avoided because the reset bit is self-clearing in 1 µs.

Copyright © 2000–2001 by LSI Logic Corporation. All rights reserved.

Table 5.2 Reset Procedure

Step	Action	Result
1	Set the TBC_DIC bit	Stop transmission of data from the 10-bit PHY interface to SerDes.
2	Wait for more than 20 µs	Insures that the remote device receiver detects that the link has been broken so it will not decode 10B data as valid.
3	Assert RESETn	Start the reset period.
4	Wait more than 10 µs.	Allow enough time for all circuits in controller to be reset.
5	Deassert RESETn	Stop the reset period.
6	Clear the TBC_DIC bit	Turns on 10-bit PHY interface and returns controller to normal operation.

5.5 Loopback

The controller has a loopback mode, but most external SerDes devices connected to the controller 10-bit PHY interface also have a loopback mode. Sometimes it is desirable to use the SerDes loopback mode instead of the controller loopback mode because the SerDes loopback mode tests a larger and/or different section of the system circuitry. When the SerDes loopback mode is used, it is recommended that the procedure outlined in Table 5.3 be followed.

Copyright © 2000–2001 by LSI Logic Corporation. All rights reserved.

Table 5.3 SerDes Loopback Procedure

STEP	Action	Result
1	Set the REJALL bit in Register 8	Ignore all receive data until the loopback mode is ready for operation.
2	Set the EWRAP bit in Register 9	Enable the external SerDes loopback mode.
3	Clear the SD_EN bit in Register 9	Ignore the signal detect output from optical transceiver because the receive optical data may be invalid.
4	Set the TBC_DIS bit in Register 10	Stop transmission of data out of 10-bit PHY interface which causes the SerDes and controller to lose sync so that they properly resync to the new data stream.
5	Wait more than 200 µs	Allow time for the SerDes and controller receivers to lose sync.
6	Clear the TBC_DIS bit in Register 10	Turn on the transmitter so that the SerDes and controller receivers can gain sync.
7	Wait more than 200 µs	Allow time for the SerDes and controller receivers to gain sync.
8	Clear the REJALL bit in Register 8	Stop ignoring receive data and turn on the receive MAC.
9	Do loopback tests	
10	Clear the EWRAP bit, and set the SD_EN bit in Register 9 (if SD pin is used)	Turn off the SerDes loopback mode and enable the signal detect function (if used).
11	Set the ANRST bit in Register 7	Restarts AutoNegotiation. Controller is ready for normal operation when AutoNegotation is completed.

5.6 AutoNegotiation

AutoNegotiation is a handshake operation between the controller and the external device (see Section 2.15, “AutoNegotiation”). If the external device is capable of AutoNegotiation, the procedures described in Section 5.6.1, “AutoNegotiation at Power Up” should be followed. If the external device is not capable of AutoNegotiation, refer to Section 5.6.2, “Negotiating with a Non-AutoNegotiation Capable Device”.

Copyright © 2000–2001 by LSI Logic Corporation. All rights reserved.

5.6.1 AutoNegotiation at Power Up

When the device is powered up the AutoNegotiation algorithm must handshake with the remote device to configure itself for a common mode of operation. To insure smooth and proper AutoNegotiation operation at power up it is recommended that the procedure outlined in Table 5.4 be followed.

Table 5.4 AutoNegotiation Power Up Procedure

STEP	Action	Result
1	Wait for the SD pin to go HIGH (If SD is not used, go to the next step.)	Waits for valid data from the optical transceiver.
2	Set RST bit in Register 7	Resets the device.
3	Set bits [15:0] in Register 21	Sets up the capabilities for AutoNegotiation.
4	Set the remaining register bits as needed.	Sets up the device for the desired operation.
5	Set ANRST bit in Register 7	Restarts AutoNegotiation.
6	Wait > 50 µs	Wait for AutoNegotiation to complete.
7	Read LINK bit in register 11 twice. If 0, then done. If 1, repeat #5–7 (up to seven times).	Determine if AutoNegotiation done and link pass. If link pass, device ready for operation. If link fail, retry again seven more times. If no link pass after seven times, disable ANEG and try manual link pass.
8	Clear AN_EN bit in Register 9	Disable AutoNegotiation.
9	Clear ANRST bit in Register 7	Clears all internal AutoNegotiation circuitry.
10	Wait > 100 µs	Wait for manual link pass.
11	Read LINK bit in Register 11 twice. If 0, go to first step. If 1, done.	If manual link pass, then device ready for operation. If link fail, then redo procedure until link pass is achieved.

Copyright © 2000–2001 by LSI Logic Corporation. All rights reserved.

5.6.2 Negotiating with a Non-AutoNegotiation Capable Device

When the controller has AutoNegotiation enabled and the remote device to which it is connected has the AutoNegotiation disabled (or does not have AutoNegotiation capability at all), the controller stays in the link fail state and continually restarts AutoNegotiation because it cannot complete a negotiation sequence successfully. Conversely, the remote device goes to the link pass state because it sees the AutoNegotiation words transmitted to it as valid idle symbols. For proper operation between two devices, the controller and the remote device must both be either set with AutoNegotiation enabled or set with AutoNegotiation disabled.

5.7 Management Counters

The controller management counters provide the necessary statistics to completely support the following IETF and IEEE specifications:

- IETF RFC 1757: RMON Statistics Group
- IETF RFC 1213 and 1573 SNMP Interfaces Group
- IETF RFC 1643: Ethernet-Like MIB
- IEEE 802.3/Cl. 30: Ethernet MIB

A complete list of the counters along with their definitions was already defined in Table 2.14. A map of the actual MIB objects from the IETF and IEEE specifications to the specific controller counters is shown below in Table 5.5–Table 5.8.

Copyright © 2000–2001 by LSI Logic Corporation. All rights reserved.

Table 5.5 MIB Objects vs. Counter Location for RMON Statistics Group MIB (RFC 1757)

	Counter Location	
MIB Objects	**Counter**	**Register Address (Low/High)**
etherStatsDropEvents	1	0b10000000 0b10000001
etherStatsOctets	2	0b10000010 0b10000011
etherStatsPkts	3	0b10000100 0b10000101
etherStatsBroadcastPkts	4	0b10000110 0b10000111
etherStatsMulticastPkts	5	0b10001000 0b10001001
etherStatsCRCAlignErrors	6	0b10001010 0b10001011
etherStatsUndersizePkts	7	0b10001100 0b10001101
etherStatsOversizePkts	8	0b10001110 0b10001111
etherStatsFragments	9	0b10010000 0b10010001
etherStatsJabber	10	0b10010010 0b10010011
etherStatsCollisions	11	0b10010100 0b10010101
etherStatsPkts64Octets	12	0b10010110 0b10010111
etherStatsPkts65to127Octets	13	0b10011000 0b10011001
etherStatsPkts128to255Octets	14	0b10011010 0b10011011

Copyright © 2000–2001 by LSI Logic Corporation. All rights reserved.

Table 5.5 MIB Objects vs. Counter Location for RMON Statistics Group MIB (RFC 1757) (Cont.)

	Counter Location	
MIB Objects	**Counter**	**Register Address (Low/High)**
etherStatsPkts256to511Octets	15	0b10011100 0b10011101
etherStatsPkts512to1023Octets	16	0b10011110 0b10011111
etherStatsPkts1024to1518Octets	17	0b10100000 0b10100001

Table 5.6 MIB Objects vs. Counter Location for SNMP Interface Group MIB (RFC 1213 and 1573)

	Counter Location	
MIB Objects	**Counter #**	**Register Address (Low/High)**
ifInOctets	28	0b10110110 0b10110111
ifInUcastPkts	29	0b10111000 0b10111001
ifInMulticastPkts	5	0b10001000 0b10001001
ifInBroadcastPkts	4	0b10000110 0b10000111
ifInNUcastPkts	5 and 4	0b10001000 0b10001001 and 0b10000110 0b10000111
ifInDiscards	1	0b10000000 0b10000001

Copyright © 2000–2001 by LSI Logic Corporation. All rights reserved.

Table 5.6 MIB Objects vs. Counter Location for SNMP Interface Group MIB (RFC 1213 and 1573) (Cont.)

	Counter Location	
MIB Objects	**Counter #**	**Register Address (Low/High)**
ifInErrors	6 and 7 and 8	0b10001010 0b10001011 and 0b10001100 0b10001101 and 0b10001110 0b10001111
ifOutOctets	30	0b10111010 0b10111011
ifOutUcastPkts	31	0b10111100 0b10111101
ifOutMulticastPkts	32	0b10111110 0b10111111
ifOutBroadcastPkts	33	0b11000000 0b11000001
ifOutNUcastPkts	32 and 33	0b10111110 0b10111111 and 0b11000000 0b11000001
ifOutDiscards	34	0b11000010 0b11000011
ifOutErrors	35	0b11000100 0b11000101

Copyright © 2000–2001 by LSI Logic Corporation. All rights reserved.

Table 5.7 MIB Objects vs. Counter Location for Ethernet-Like Group MIB (RFC 1643)

	Counter Location	
MIB Objects	**Counter #**	**Register Address (Low/High)**
dot3StatsAlignmentErrors	36	0b11000110 0b11000111
dot3StatsFCSErrors	6	0b10001010 0b10001011
dot3StatsSingleCollisionFrames	38	0b11001010 0b11001011
dot3StatsMultipleCollisionFrames	39	0b11001100 0b11001101
dot3StatsSQETestErrors	40	0b11001110 0b11001111
dot3StatsDeferredTransmissions	41	0b11010000 0b11010001
dot3StatsLateCollisions	42	0b11010010 0b11010011
dot3StatsExcessiveCollisions	43	0b11010100 0b11010101
dot3StatsInternalMacTransmitErrors	34	0b11000010 0b11000011
dot3StatsCarrierSenseErrors	44	0b11010110 0b11010111
dot3StatsFrameTooLongs	8	0b10001110 0b10001111
dot3StatsInternalMacReceiveErrors	1	0b10000000 0b10000001

Copyright © 2000–2001 by LSI Logic Corporation. All rights reserved.

Table 5.8 MIB Objects vs. Counter Location For Ethernet MIB (IEEE 802.3z, Clause 30)

	Counter Location	
MIB Objects	**Counter #**	**Register Address (Low/High)**
aFramesTransmittedOK	19 through 35	0b10100100 0b10100101 through 0b11000100 0b11000101
aSingleCollisionFrames	38	0b11001010 0b11001011
aMultipleCollisionFrames	39	0b11001100 0b11001101
aFramesReceivedOK	29 and 4 and 5	0b10111000 0b10111001 and 0b10000110 0b10000111 and 0b10001000 0b10001001
aFrameCheckSequenceErrors	6	0b10001010 0b10001011
aAlignmentErrors	36	0b11000110 0b11000111
aOctetsTransmittedOK	45	0b11011000 0b11011001
aFramesWithDeferredXmissions	41	0b11010000 0b11010001
aLateCollisions	42	0b11010010 0b11010011
aFrameAbortedDueToXSCollisions	43	0b11010100 0b11010101
aFrameAbortedDueToIntMACXmitError	34	0b11000010 0b11000011
aCarrierSenseErrors	44	0b11010110 0b11010111

Copyright © 2000–2001 by LSI Logic Corporation. All rights reserved.

Table 5.8 MIB Objects vs. Counter Location For Ethernet MIB (IEEE 802.3z, Clause 30) (Cont.)

	Counter Location	
MIB Objects	**Counter #**	**Register Address (Low/High)**
aOctetsReceivedOK	46	0b11011010 0b11011011
aFramesLostDueToIntMACRcvrError	1	0b10000000 0b10000001
aMulticastFrameXmittedOK	21	0b10101000 0b10101001
aBroadcastFramesXmittedOK	20	0b10100110 0b10100111
aFramesWithExcessiveDefferal	47	0b11011100 0b11011101
aMulticastFramesReceivedOK	5	0b10001000 0b10001001
aBroadcastFramesReceivedOK	4	0b10000110 0b10000111
aInRangeLengthErrors	48	0b11011110 0b11011111
aOutOfRangeLengthField	49	0b11100000 0b11100001
aFrameTooLongErrors	8	0b10001110 0b10001111
aSQETestErrors	40	0b11001110 0b11001111
aSymbolErrorDuringCarrier	50	0b11100010 0b11100011
aMACControlFramesTransmitted	52	0b11100110 0b11100111
aMACControlFramesReceived	53	0b11101000 0b11101001

Copyright © 2000–2001 by LSI Logic Corporation. All rights reserved.

Table 5.8 MIB Objects vs. Counter Location For Ethernet MIB (IEEE 802.3z, Clause 30) (Cont.)

	Counter Location	
MIB Objects	**Counter #**	**Register Address (Low/High)**
aUnsupportedOpcodesReceived	51	0b11100100 0b11100101
aPauseMACCtrlFramesTransmitted	52	0b11100110 0b11100111
aPauseMACCtrlFramesReceived	53	0b11101000 0b11101001

5.8 TX Packet and Octet Counters

The controller counter set includes packet and octet counters for the transmit and receive packets. The RMON specifications state that packet and octet counters should only tabulate received information. This is sometimes interpreted to mean both transmitted and received information, because Ethernet was originally a shared media protocol. As such, the tables above only point to receive packet and octet counters, but the transmit packet and octet counters are also available in counters 17 through 26 and can be summed with the receive packet and octet counts if desired.

5.9 Power Supply Decoupling

There are 23 VCCs (VCC[22:0]) and 31 GNDs (GND[30:0]) on the controller. All GNDs should also be connected to a large ground plane. If the GNDs vary in potential by even a small amount, noise and latch up can result. The GNDs should be kept to within 50 mV of each other.

Some of the VCC pins on the controller go to the internal core logic, and the remaining VCCs go to the I/O buffers. The core and I/O VCCs should be isolated from each other to minimize jitter on the 10-bit PHY interface. It is recommended that all of the I/O VCCs be directly connected to a large VCC plane. It is also recommended that the core VCCs (pins 70,

Copyright © 2000–2001 by LSI Logic Corporation. All rights reserved.

97, 135, 147, and193 of the 8101 or pins B6, D13, G14, N13, and R7 of the 8104) be isolated from the I/O VCCs with a 2-ohm resistor between the VCC plane and the device core VCC pins, as shown in Figure 5.2.

Figure 5.2 Decoupling Recommendations

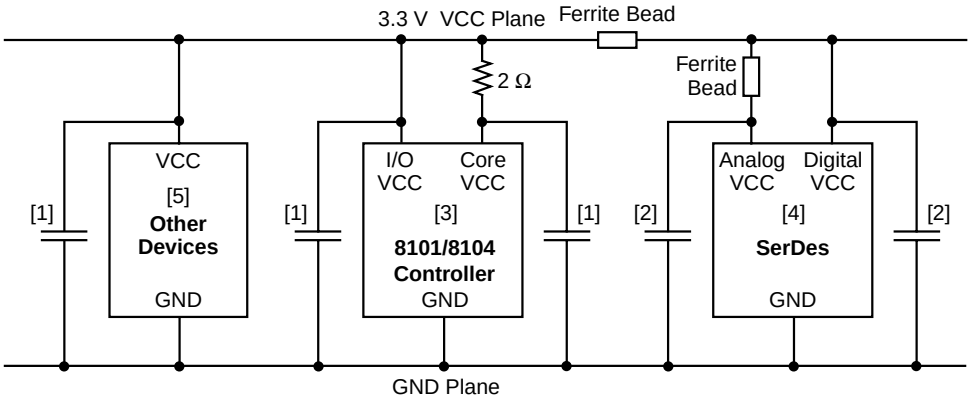

Notes:

[1] It is recommended that a 0.1/0.001 µF pair of capacitors for every four VCCs less than 0.5 inches from the device VCC/GND pins, evenly distributed around all four sides of the devices.

[2] Same as Note [1] except every two VCCs.

[3] Core VCC pins are 70, 97, 135, 147, and 193 of the 8101 or pins B6, D13, G14, N13, and R7 of the 8104. All remaining VCC pins are I/O VCCs.

[4] These are generic recommendations for SerDes. Follow any recommendations fromthe specific SerDes manufacturer.

[5] This is a generic recommendation for other digital devices. Follow any recommendations from the spevific device manufacturers.

The 2 ohm resistor will reduce the amount of noise coupling from the I/O VCCs to the core VCCs. A resistor is recommended over a ferrite bead because the inductance of a ferrite bead can induce noise spikes at the device pins. Decoupling capacitors should then be placed between the device VCC pins and GND plane, as shown in Figure 5.2 and described as follows.

The external SerDes device that is typically connected to the 10-bit PHY interface can also be very sensitive to noise from the VCC plane. Recommendations from the manufacturer of the SerDes device used should be followed. Generically, it has been found from practice that the SerDes should be isolated from all devices on the PCB with a ferrite bead between the VCC plane and all of the SerDes VCC pins, as shown in Figure 5.2. In addition, it has been found from practice that the analog

Copyright © 2000–2001 by LSI Logic Corporation. All rights reserved.

and digital VCC pins on the SerDes device should be isolated from each other with a ferrite bead placed between the analog SerDes VCC pins and the digital SerDes VCC pins, as shown in Figure 5.2. Decoupling capacitors should then be placed between the SerDes device VCC pins and GND plane, as shown in Figure 5.2 and described as follows.

For the controller and other digital devices there should be a pair of 0.1 µf and 0.001 µf decoupling capacitors connected between VCC and GND for every four sets of VCC/GND pins placed as close as possible to the device pins, preferably within 0.5" and evenly distributed around all four sides of the devices. For the external SerDes device, there should be a pair of 0.1/0.001 µf capacitors for every two sets of VCC/GND pins. The 0.1 µf and 0.001 µf capacitors reduce the LOW and HIGH frequency noise, respectively, on the VCC at the device.

The PCB layout and power supply decoupling discussed above should provide sufficient decoupling to achieve the following when measured at the device:

- The resultant AC noise voltage measured across each VCC/GND set should be less than 100 mVpp.
- All VCCs should be within 50 mVpp of each other.
- All GNDs should be within 50 mVpp of each other.

Copyright © 2000–2001 by LSI Logic Corporation. All rights reserved.

Chapter 6
Specifications

This Chapter describes the specifications of the 8101/8104 Gigabit Ethernet Controller and consists of the following Sections:

- Section 6.1, “Absolute Maximum Ratings”
- Section 6.2, “DC Electrical Characteristics”
- Section 6.3, “AC Electrical Characteristics”
- Section 6.4, “8101/8104 Pinouts and Pin Listings”
- Section Figure 6.13, “8104 208-Pin BGA Pinout”
- Section 6.5, “Package Mechanical Dimensions”

6.1 Absolute Maximum Ratings

Absolute maximum ratings are limits, which when exceeded may cause permanent damage to the device or affect device reliability. All voltages are specified with respect to GND, unless otherwise specified.

VCC supply voltage	–0.3 V to 4.0 V
All inputs and outputs	–0.3 V to 5.5 V
Package power dissipation	2.2 Watt @ 70 °C
Storage temperature	–65 to +150 °C
Temperature under bias	–10 to +85 °C
Lead temperature (soldering, 10 sec)	260 °C
Body temperature (soldering, 30 sec)	220 °C

Copyright © 2000–2001 by LSI Logic Corporation. All rights reserved.

6.2 DC Electrical Characteristics

Table 6.1 lists and describes the DC electrical characteristics of the 8101/8104. Unless otherwise noted, all test conditions are as follows:

- TA = 0 to +70 °C
- VCC = 3.3 V ± 5%
- SCLK = 66 MHz ± 0.01%
- TCLK = 125 MHz ± 0.01%

Table 6.1 DC Electrical Characteristics

Symbol	Parameter	Limit			Unit	Conditions
		Min	Typ	Max		
VIL	Input LOW voltage	–	–	0.8	Volt	
VIH	Input HIGH voltage	2	–	5.5	Volt	
IIL	Input LOW current	–	–	–1	µA	VIN = GND
IIH	Input HIGH current	–	–	1	µA	VIN = VCC
VOL	Output LOW voltage	GND	–	0.4	Volt	IOL = –4 mA All except LINKn
		GND	–	1	Volt	IOL = –20 mA LINKn
VOH	Output HIGH voltage	2.4	–	VCC	Volt	IOL = 4 mA All except LINKn
		VCC – 1.0	–	VCC	Volt	IOL = 20 mA LINKn
CIN	Input capacitance	–	–	5	pF	
ICC	VCC supply current	–	–	300	mA	No output load

Copyright © 2000–2001 by LSI Logic Corporation. All rights reserved.

6.3 AC Electrical Characteristics

The following tables list and describe the the AC electrical characteristics of the 8101/8104. Unless otherwise noted, all test conditions are as follows:

- TA = 0 to +70 °C
- VCC = 3.3 V ± 5%
- SCLK = 66 MHz ± 0.01%
- TCLK = 125 MHz ± 0.01%
- Input conditions:

  All Inputs: tr, tf ≤ 4 ns, 0.8 V to 2.0 V
- Output loading

  TBC, TX[0:9]: 10 pF

  LINK: 50 pF

  All other digital outputs: 30 pF
- Measurement points:

  Data active to 3-state: 200 mV change

  Data 3-state to active: 200 mV change

  All inputs and outputs: 1.5 Volts

Copyright © 2000–2001 by LSI Logic Corporation. All rights reserved.

Table 6.2 Input Clock Timing Characteristics

Symbol	Parameter	Limit			Unit	Conditions
		Min	Typ	Max		
t1	SCLK cycle time	1/33		1/66	1 MHz	
t2	SCLK duty cycle	40		60	%	
t3	TCLK period	7.9992	8	8.0008	ns	
t4	TCLK HIGH time	3.6		4.4	ns	
t5	TCLK LOW time	3.6		4.4	ns	
t6	TCLK to TBC delay	0		8	ns	
t7	REGCLK cycle time	1/5		1/40	1 MHz	
t8	REGCLK duty cycle	40		60	%	

Note: Refer to Figure 6.1 for timing diagram.

Figure 6.1 Input Clock Timing

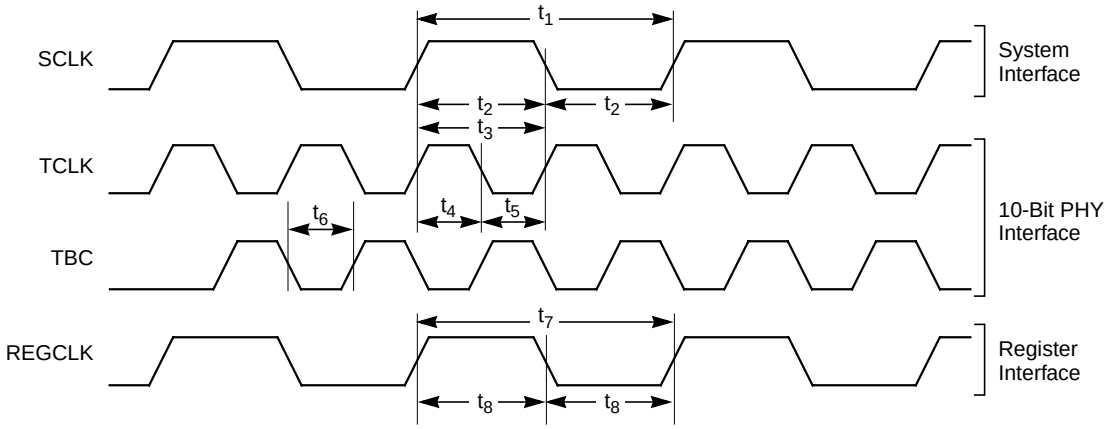

Copyright © 2000–2001 by LSI Logic Corporation. All rights reserved.

Table 6.3 Transmit System Interface Timing Characteristics

Symbol	Parameter	Limit			Unit	Conditions
		Min	Typ	Max		
t11	TXENn setup time	5			ns	
t12	TXENn hold time	0			ns	
t13	TXENn deassert time	1 SCLK cycle			ns	
t14	TXD, TXBE, TXSOFn, TXEOF, and TXCRC setup time	5			ns	
t15	TXD, TXBE, TXSOFn, TXEOF, and TXCRC hold time	0			ns	
t16	TXWMn delay time	0		8	ns	
t17	TXWMn rise/fall time			4	ns	

Note: Refer to Figure 6.2 for timing diagram.

Copyright © 2000–2001 by LSI Logic Corporation. All rights reserved.

Copyright © 2000–2001 by LSI Logic Corporation. All rights reserved.

Figure 6.2 Transmit System Interface Timing

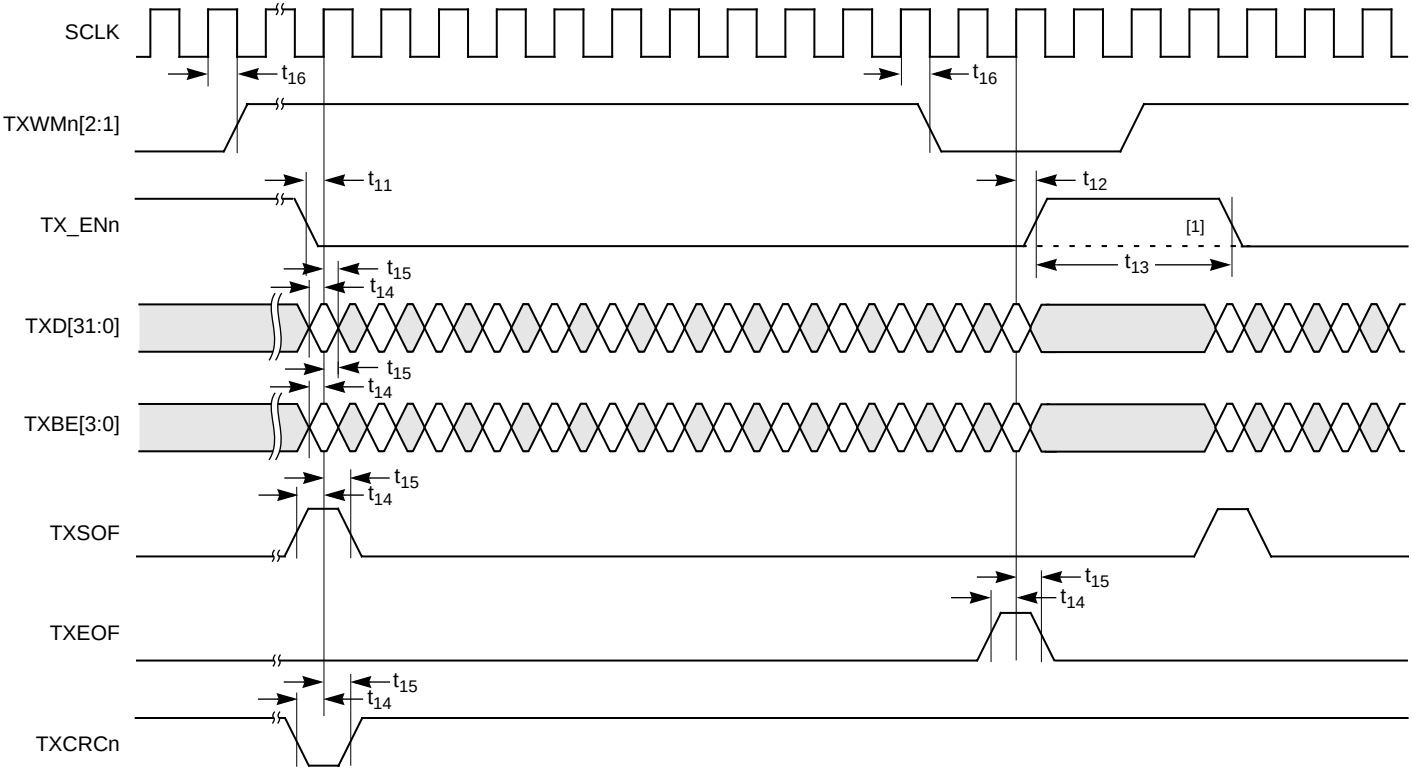

Note:

[1] Back-to-back packet transmission allowed without TXENn deassertion.

Table 6.4 Receive System Interface Timing Characteristics

Symbol	Parameter	Limit			Unit	Conditions
		Min	Typ	Max		
t31	RXENn setup time	5			ns	
t32	RXENn hold time	1			ns	
t33	RXENn deassert time	3 SCLK cycles			ns	
t34	RXD, RXBE, RXSOF, RXEOF, and RXWM delay time	0		8	ns	
t35	RXD, RXBE, RXSOF, RXEOF, and RXWM rise/fall time			4	ns	
t41	RXABORT setup time	5			ns	
t42	RXABORT hold time	0			ns	
t43	RXABORT assert to RXWM deassert delay	0		1 SCLK cycles + 8 ns	ns	
t46	RXOEn deassert to data High-Z delay	0		15	ns	
t47	RXOEn assert to data active delay	0		15	ns	

Note: Refer to Figure 6.3–Figure 6.5 for timing diagrams.

Copyright © 2000–2001 by LSI Logic Corporation. All rights reserved.

Figure 6.3 Receive System Interface Timing

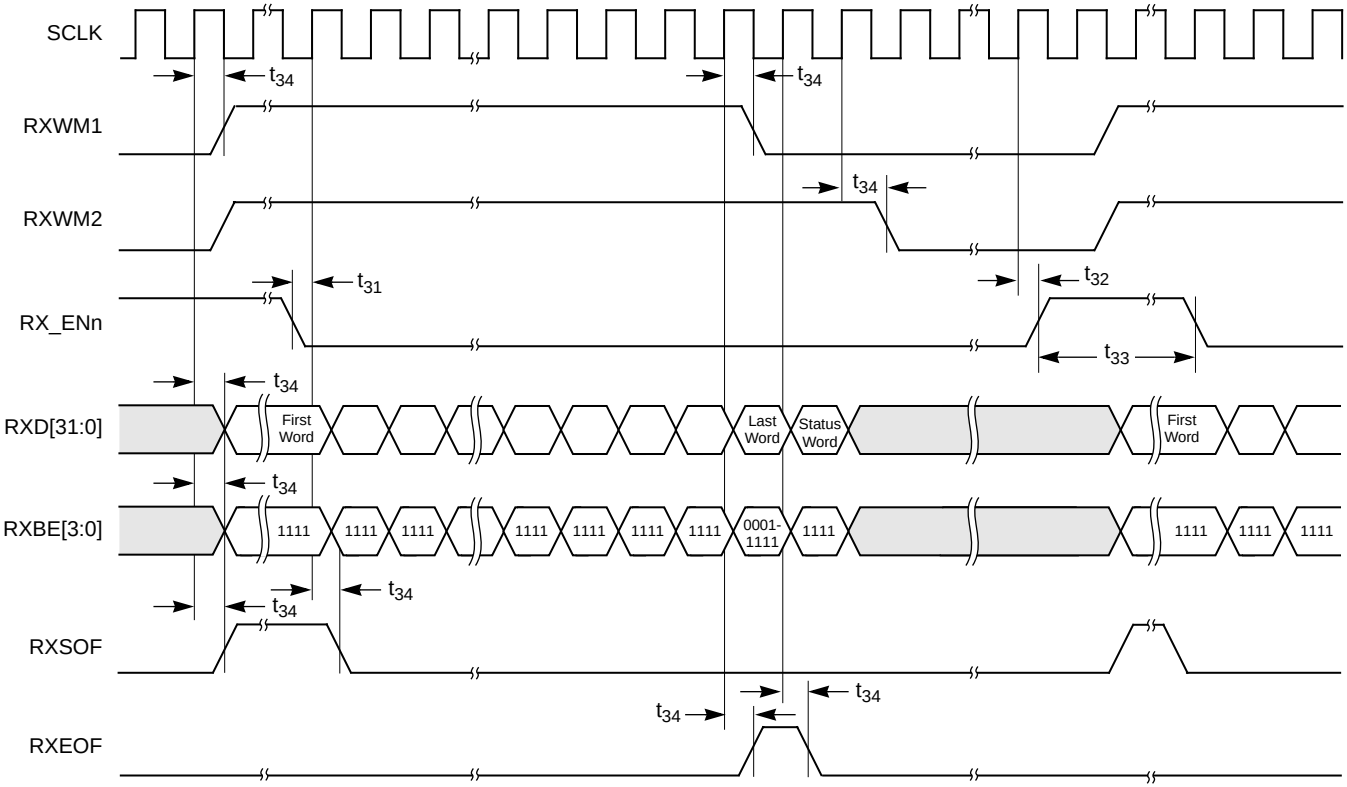

Copyright © 2000–2001 by LSI Logic Corporation. All rights reserved.

Figure 6.4 Receive System Interface RXABORT Timing

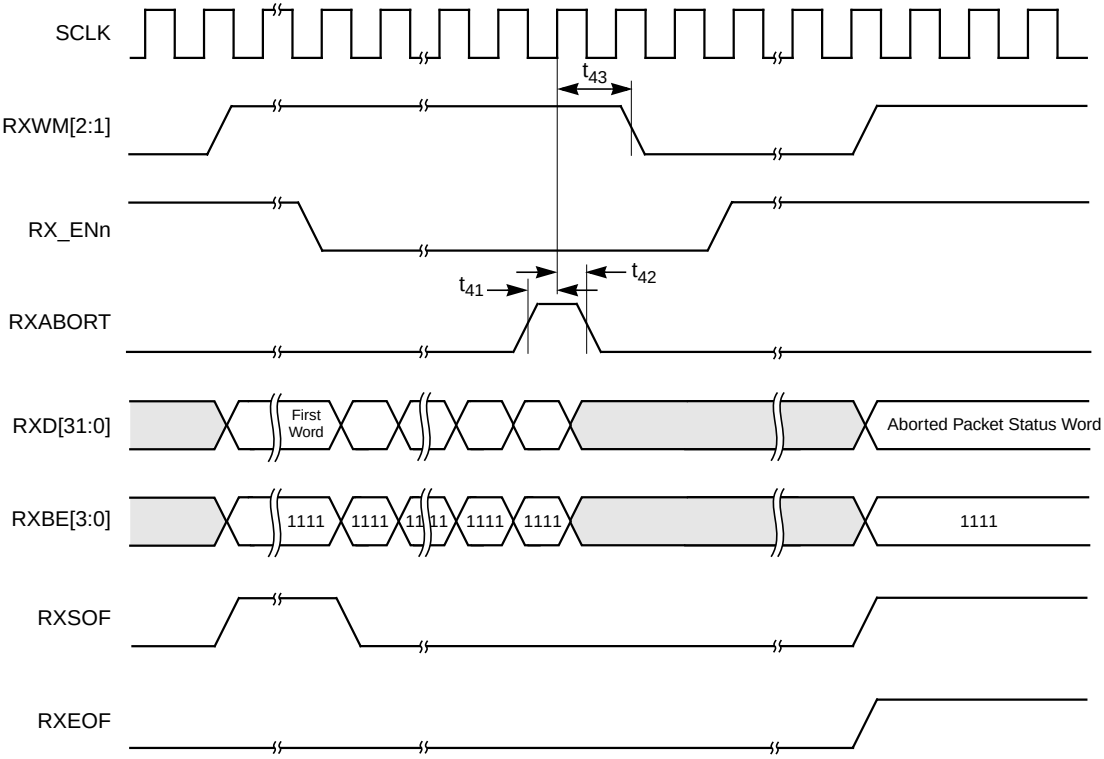

Figure 6.5 Receive System Interface RXOEn Timing

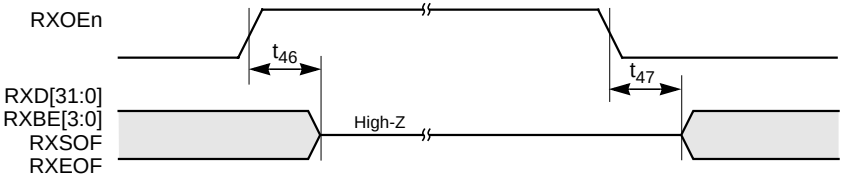

Copyright © 2000–2001 by LSI Logic Corporation. All rights reserved.

Table 6.5 System Interface RXDC/TXDC Timing Characteristics

Symbol	Parameter	Limit			Unit	Conditions
		Min	Typ	Max		
t51	TXDC/RXDC assert delay time	0		8	ns	
t52	TXDC/RXDC deassert delay time	0		2 SCLK cycle + 8 ns	ns	AutoClear mode off
		0		3 SCLK cycle + 8 ns	ns	AutoClear mode on
t53	CLR_TXDC/RXDC setup time	5			ns	
t54	CLR_TXDC/RXDC hold time	0			ns	
	TXDC/RXDC rise and fall time			4	ns	

Note: Refer to Figure 6.6 for timing diagram.

Figure 6.6 System Interface RXDC/TXDC Timing

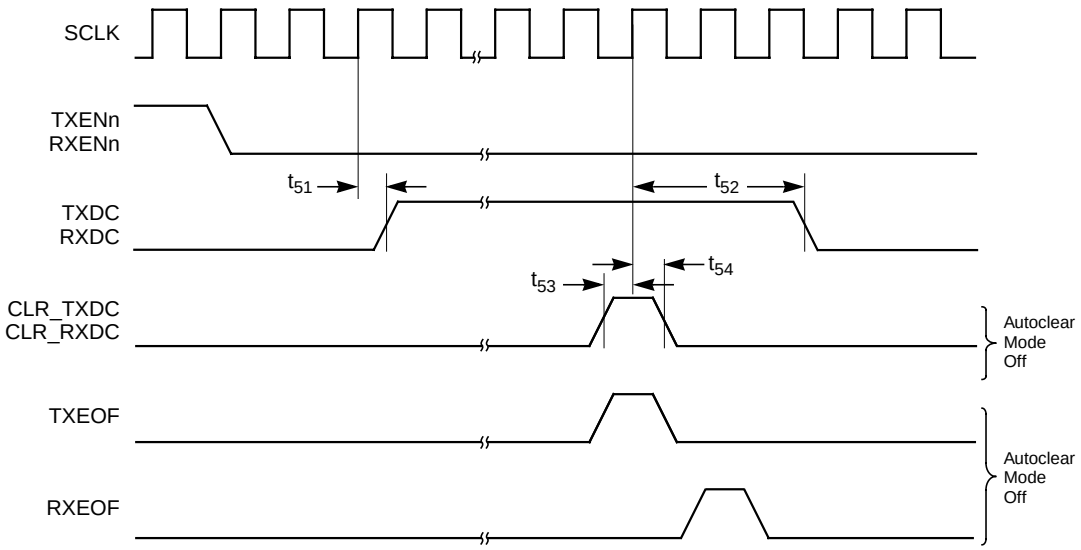

Copyright © 2000–2001 by LSI Logic Corporation. All rights reserved.

Table 6.6 Transmit 10-Bit PHY Interface Timing Characteristics

Symbol	Parameter	Limit			Unit	Conditions
		Min	Typ	Max		
t61	TBC period	7.992	8	8.008	ns	
t62	TBC HIGH time	3.2		4.8	ns	
t63	TBC LOW time	3.2		4.8	ns	
t64	TX[0:9] data valid before TBC rising edge	2.0			ns	Assumes TBC duty cycle = 40–60%
t65	TX[0:9] data valid after TBC rising edge	1.0			ns	Assumes TBC duty cycle = 40–60%
t66	TBC, TX[0:9] rise and fall time	0.7		2.4	ns	

Note: Refer to Figure 6.7 for timing diagram.

Figure 6.7 Transmit 10-Bit PHY Interface Timing

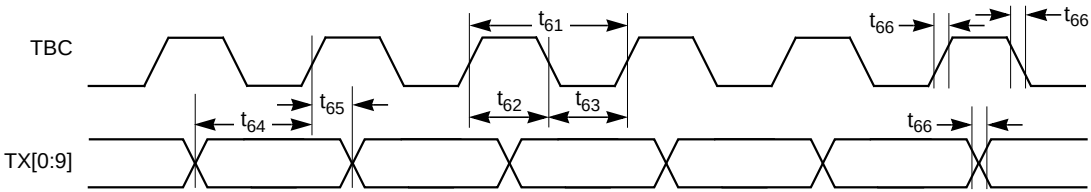

Copyright © 2000–2001 by LSI Logic Corporation. All rights reserved.

Table 6.7 Receive 10-Bit PHY Interface Timing Characteristics

Symbol	Parameter	Limit			Unit	Conditions
		Min	Typ	Max		
t_{71}	RBC frequency	62.4937	62.5	62.5063	MHz	
t_{72}	RBC HIGH time	6.4		9.6	ns	
		6.4		128	ns	During synchronization
t_{73}	RBC LOW time	6.4		9.6	ns	
		6.4		128	ns	During synchronization
t_{74}	RBC skew	7.5		8.5	ns	
t_{75}	RX[0:9] setup time	2.5			ns	
t_{76}	RX[0:9] hold time	1.5			ns	
t_{77}	RBC, RX[0:9] rise and fall time	0.7		2.4	ns	

Note: Refer to Figure 6.8 for timing diagram.

Figure 6.8 Receive 10-Bit PHY Interface Timing

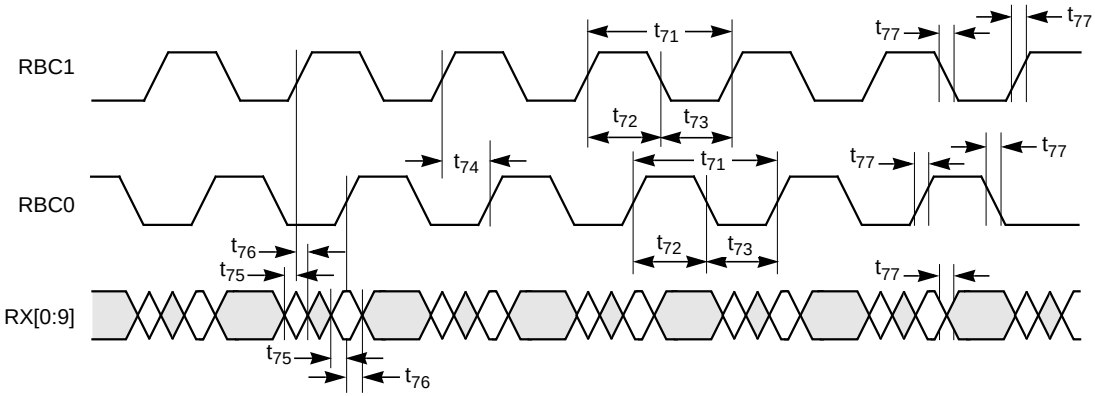

Copyright © 2000–2001 by LSI Logic Corporation. All rights reserved.

Table 6.8 Register Interface Timing Characteristics

Symbol	Parameter	Limit			Unit	Conditions
		Min	Typ	Max		
t81	REGCSn, REGWRn, REGRDn, REGA, REGD setup time	10			ns	
t82	REGCSn, REGWRn, REGRDn, REGA, REGD hold time	1			ns	
t83	REGCLK to REGD active delay			10	ns	Read cycle. All registers except Counter Registers 1–53
				6 REGCLK cycles + 10 ns	ns	Read cycle. Counter Registers 1–53, first 16 bits of counter result
				3 REGCLK cycles + 10 ns	ns	Read cycle. Counter Registers 1–53, second 16 bits of counter result
t84	REGCLK to REGD 3-state delay	0		10	ns	
t85	REGCLK to REGINT assert delay	0		20	ns	
t86	REGCLK to REGINT deassert delay	0		20	ns	
t87	Deassertion time between reads	4 REG-CLK				

Note: Refer to Figure 6.9 and Figure 6.10 for timing diagrams.

Copyright © 2000–2001 by LSI Logic Corporation. All rights reserved.

Figure 6.9 Register Interface Timing (Excluding Counter Read Cycle)

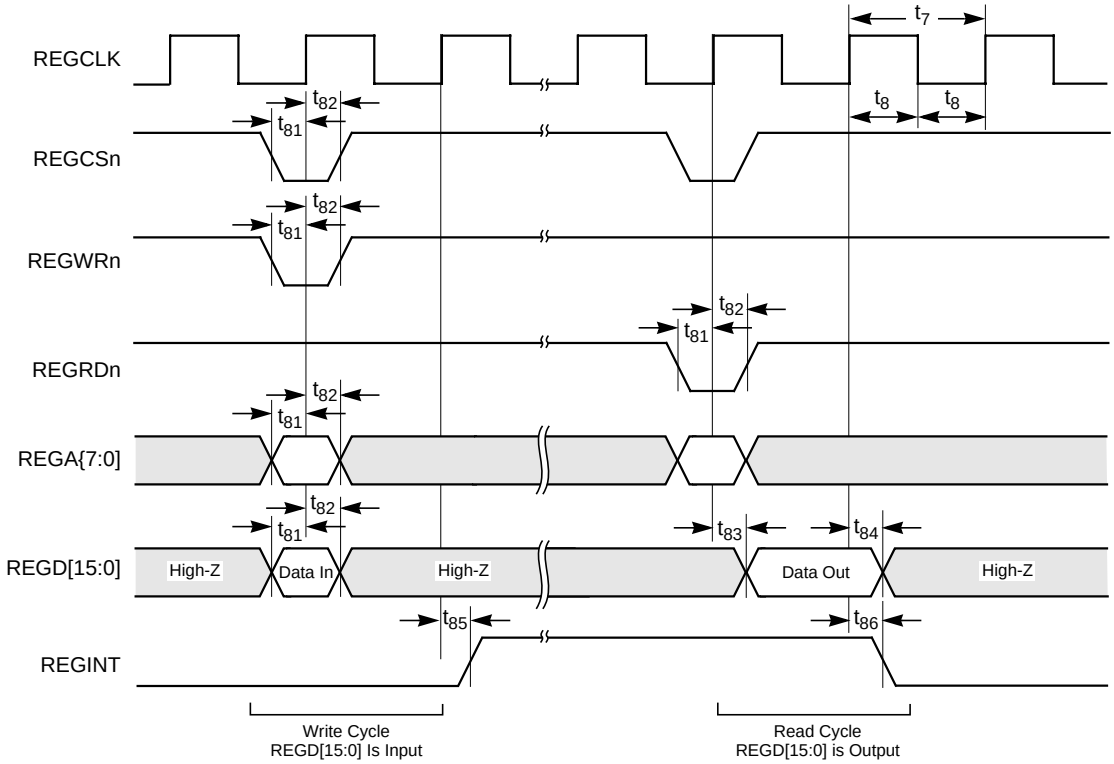

Copyright © 2000–2001 by LSI Logic Corporation. All rights reserved.

Figure 6.10 Register Interface Timing, Counter Read Cycle (of the Same Counter)

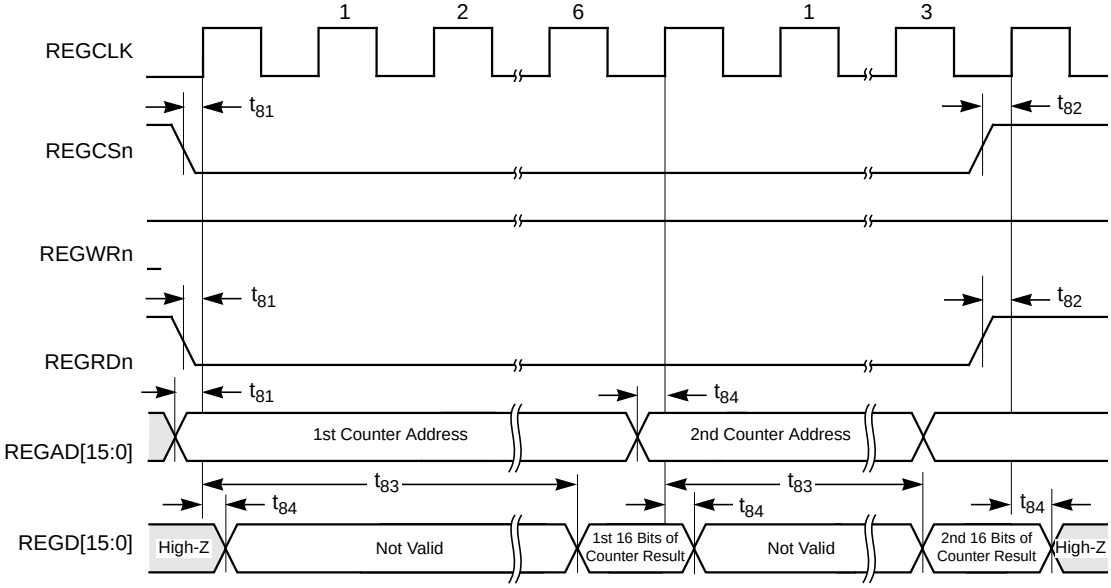

Copyright © 2000–2001 by LSI Logic Corporation. All rights reserved.

Figure 6.11 Register Interface Timing, Counter Read Cycle (Between Different Counters)

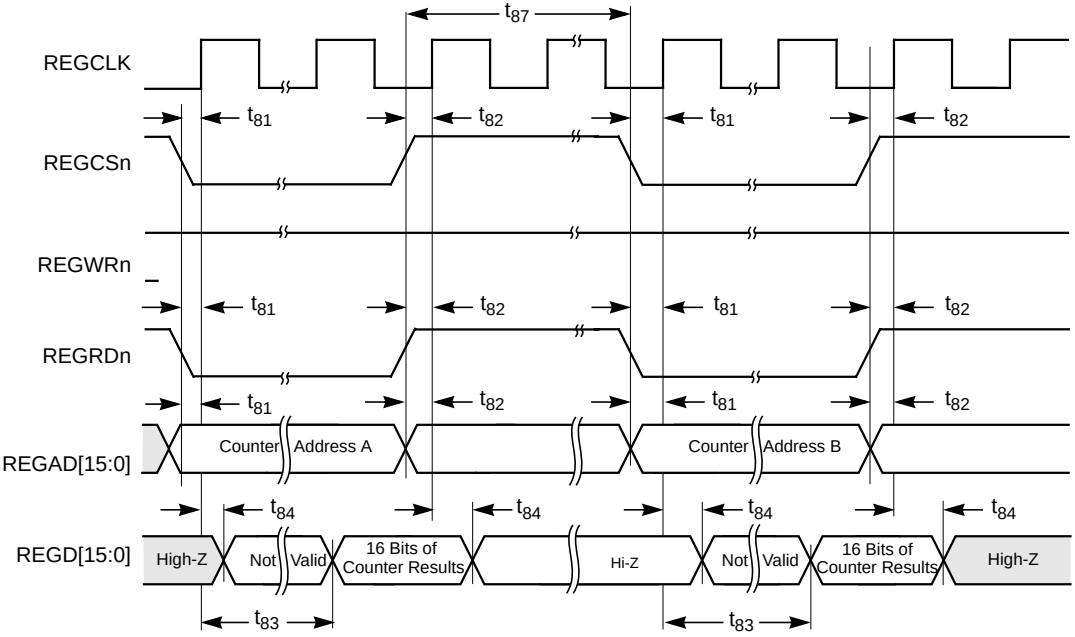

Note: No burst reading,

Copyright © 2000–2001 by LSI Logic Corporation. All rights reserved.

6.4 8101/8104 Pinouts and Pin Listings

Figure 6.12 shows the pinout and Table 6.9 lists the pins for the 8101 and Figure 6.13 shows the pinout and Table 6.10 lists the pins for the 8104.

Copyright © 2000–2001 by LSI Logic Corporation. All rights reserved.

Figure 6.12 8101 208-Pin PQFP Pinout

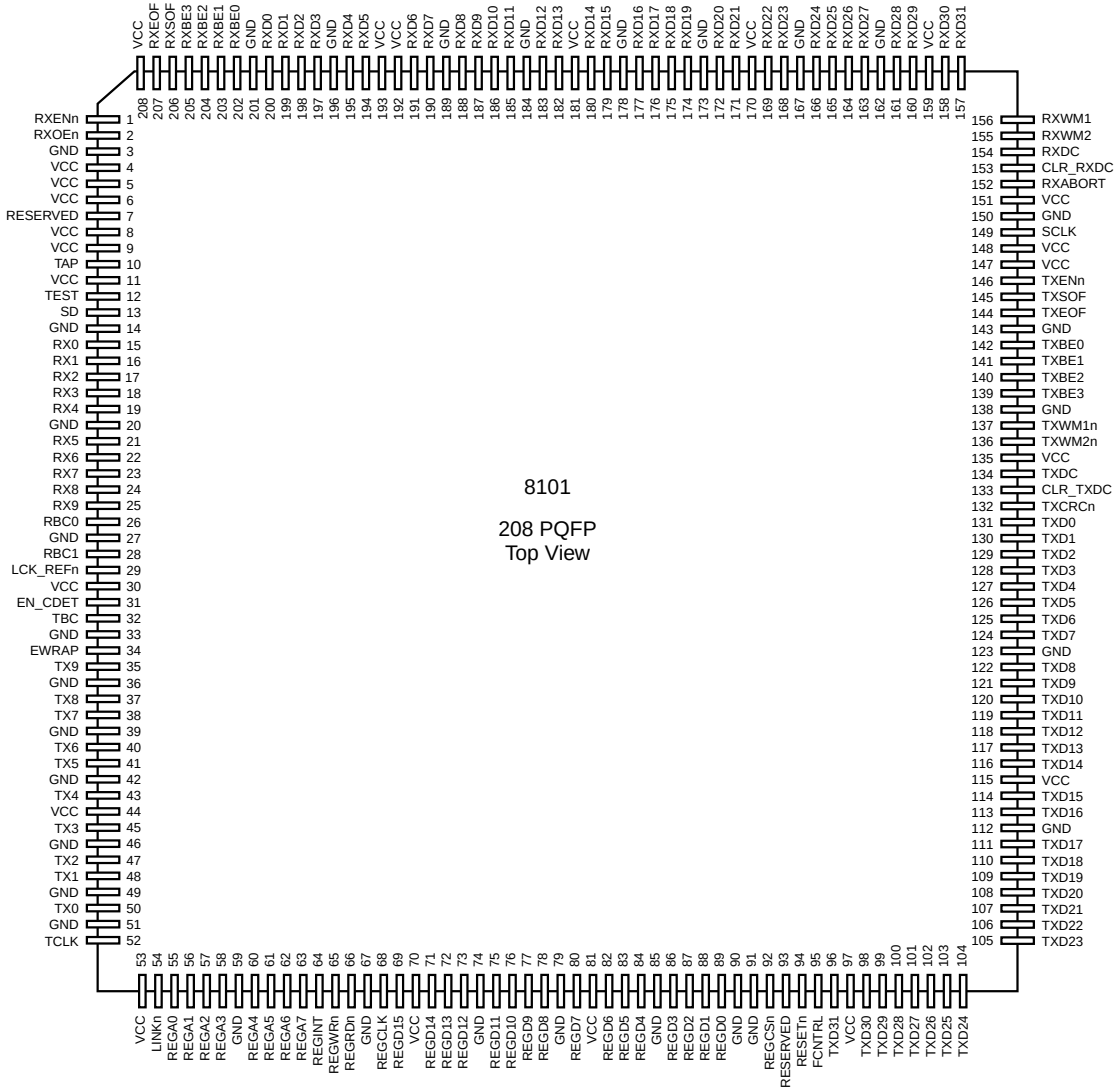

Copyright © 2000–2001 by LSI Logic Corporation. All rights reserved.

Table 6.9 8101 208-Pin PQFP Pin List (Alphabetical Listing)

Signal	Pin	Signal	Pin	Signal	Pin	Signal	Pin	Signal	Pin
CLR_RXDC	153	REGA2	57	RXBE1	203	SCLK	149	TXD21	107
CLR_TXDC	133	REGA3	58	RXBE2	204	SD	13	TXD22	106
EN_CDET	31	REGA4	60	RXBE3	205	TAP	10	TXD23	105
EWRAP	34	REGA5	61	RXD0	200	TBC	32	TXD24	104
FCNTRL	95	REGA6	62	RXD1	199	TCLK	52	TXD25	103
GND	3	REGA7	63	RXD2	198	TEST	12	TXD26	102
GND	14	REGCLK	68	RXD3	197	TX0	50	TXD27	101
GND	20	REGCSn	92	RXD4	195	TX1	48	TXD28	100
GND	27	REGD0	89	RXD5	194	TX2	47	TXD29	99
GND	33	REGD1	88	RXD6	191	TX3	45	TXD30	98
GND	36	REGD2	87	RXD7	190	TX4	43	TXD31	96
GND	39	REGD3	86	RXD8	188	TX5	41	TXDC	134
GND	42	REGD4	84	RXD9	187	TX6	40	TXENn	146
GND	46	REGD5	83	RXD10	186	TX7	38	TXEOF	144
GND	49	REGD6	82	RXD11	185	TX8	37	TXSOF	145
GND	51	REGD7	80	RXD12	183	TX9	35	TXWM1n	137
GND	59	REGD8	78	RXD13	182	TXBE0	142	TXWM2n	136
GND	67	REGD9	77	RXD14	180	TXBE1	141	VCC	4
GND	74	REGD10	76	RXD15	179	TXBE2	140	VCC	5
GND	79	REGD11	75	RXD16	177	TXBE3	139	VCC	6
GND	85	REGD12	73	RXD17	176	TXCRCn	132	VCC	8
GND	90	REGD13	72	RXD18	175	TXD0	131	VCC	9
GND	91	REGD14	71	RXD19	174	TXD1	130	VCC	11
GND	112	REGD15	69	RXD20	172	TXD2	129	VCC	30
GND	123	REGINT	64	RXD21	171	TXD3	128	VCC	44
GND	138	REGRDn	66	RXD22	169	TXD4	127	VCC	53
GND	143	REGWRn	65	RXD23	168	TXD5	126	VCC	70
GND	150	RESERVED	7	RXD24	166	TXD6	125	VCC	81
GND	162	RESERVED	93	RXD25	165	TXD7	124	VCC	97
GND	167	RESETn	94	RXD26	164	TXD8	122	VCC	115
GND	173	RX0	15	RXD27	163	TXD9	121	VCC	135
GND	178	RX1	16	RXD28	161	TXD10	120	VCC	147
GND	184	RX2	17	RXD29	160	TXD11	119	VCC	148
GND	189	RX3	18	RXD30	158	TXD12	118	VCC	151
GND	196	RX4	19	RXD31	157	TXD13	117	VCC	159
GND	201	RX5	21	RXDC	154	TXD14	116	VCC	170
LCK_REFn	29	RX6	22	RXENn	1	TXD15	114	VCC	181
LINKn	54	RX7	23	RXEOF	207	TXD16	113	VCC	193
RBC0	26	RX8	24	RXOEn	2	TXD17	111	VCC	192
RBC1	28	RX9	25	RXSOF	206	TXD18	110	VCC	208
REGA0	55	RXABORT	152	RXWM1	156	TXD19	109		
REGA1	56	RXBE0	202	RXWM2	155	TXD20	108		

Copyright © 2000–2001 by LSI Logic Corporation. All rights reserved.

Figure 6.13 8104 208-Pin BGA Pinout

A1 VCC	A2 RXEOF	A3 RXBE3	A4 RXD0	A5 RXD4	A6 VCC	A7 RXD7	A8 RXD11	A9 RXD16	A10 RXD20	A11 RXD21	A12 RXD23	A13 RXD27	A14 RXD29	A15 RXD30	A16 RXD31
B1 RXOEn	B2 RXENn	B3 RXSOF	B4 RXBE2	B5 RXD2	B6 VCC	B7 RXD8	B8 RXD10	B9 RXD15	B10 RXD19	B11 VCC	B12 RXD25	B13 RXD28	B14 VCC	B15 RXWM1	B16 RXWM2
C1 GND	C2 VCC	C3 VCC	C4 RXBE1	C5 RXD3	C6 VCC	C7 RXD6	C8 RXD12	C9 RXD14	C10 RXD18	C11 RXD22	C12 RXD26	C13 GND	C14 RXABORT	C15 CLR_RXDC	C16 TXDC
D1 VCC	D2 VCC	D3 RESERVED	D4 RXBE0	D5 RXD1	D6 RXD5	D7 RXD9	D8 RXD13	D9 VCC	D10 RXD17	D11 VCC	D12 RXD24	D13 VCC	D14 VCC	D15 SLCK	D16 VCC
E1 VCC	E2 TAP	E3 VCC	E4 TEST									E13 GND	E14 TXEOF	E15 TXSOF	E16 TXENn
F1 SD	F2 RX0	F3 RX1	F4 RX2									F13 TXBE3	F14 TXBE2	F15 TXBE0	F16 TXBE1
G1 RX4	G2 RX3	G3 RX5	G4 RX6			G7 GND	G8 GND	G9 GND	G10 GND			G13 TXDC	G14 VCC	G15 TXWM2n	G16 TXWM1n
H1 RX8	H2 RX7	H3 RX9	H4 RBC0			H7 GND	H8 GND	H9 GND	H10 GND			H13 TXD1	H14 TXD0	H15 TXCRCn	H16 CLR_TXDC
J1 RBC1	J2 LCK_REFn	J3 VCC	J4 VCC			J7 GND	J8 GND	J9 GND	J10 GND			J13 TXD2	J14 TXD3	J15 TXD5	J16 TXD4
K1 TBC	K2 EN_CDET	K3 EWRAP	K4 TX9			K7 GND	K8 GND	K9 GND	K10 GND			K13 TXD6	K14 TXD7	K15 GND	K16 TXD8
L1 TX7	L2 TX8	L3 GND	L4 TX6									L13 TXD9	L14 TXD10	L15 TXD11	L16 TXD12
M1 GND	M2 TX5	M3 TX4	M4 VCC									M13 TXD13	M14 TXD14	M15 TXD15	M16 VCC
N1 TX3	N2 TX2	N3 GND	N4 GND	N5 REGWRn	N6 REGD15	N7 REGD12	N8 REGD8	N9 REGD7	N10 REGD5	N11 REGD1	N12 RESERVED	N13 VCC	N14 TXD17	N15 TXD18	N16 TXD16
P1 TX1	P2 TCLK	P3 REGA3	P4 REGA5	P5 REGINT	P6 REGCLK	P7 REGD13	P8 REGD9	P9 REGD6	P10 REGD4	P11 REGD0	P12 RESETn	P13 TXD30	P14 TXD19	P15 TXD22	P16 TXD20
R1 TX0	R2 VCC	R3 REGA2	R4 REGA4	R5 REGA6	R6 REGRDn	R7 VCC	R8 REGD11	R9 VCC	R10 REGD2	R11 GND	R12 TXD31	R13 TXD28	R14 TXD27	R15 TXD23	R16 TXD21
T1 LINKn	T2 REGA0	T3 REGA1	T4 GND	T5 REGA7	T6 GND	T7 REGD14	T8 REGD10	T9 VCC	T10 REGD3	T11 REGCSn	T12 FCNTRL	T13 TXD29	T14 TXD26	T15 TXD25	T16 TXD24

Copyright © 2000–2001 by LSI Logic Corporation. All rights reserved.

Table 6.10 8104 208-Pin BGA Pin List (Alphabetical Listing)

Signal	Pin	Signal	Pin	Signal	Pin	Signal	Pin	Signal	Pin
CLR_RXDC	C15	REGA6	R05	RXD1	D05	TCLK	P02	TXD25	T15
CLR_TXDC	H16	REGA7	T05	RXD2	B05	TEST	E04	TXD26	T14
EN_CDET	K02	REGCLK	P06	RXD3	C05	TX0	R01	TXD27	R14
EWRAP	K03	REGCSn	T11	RXD4	A05	TX1	P01	TXD28	R13
FCNTRL	T12	REGD0	P11	RXD5	D06	TX2	N02	TXD29	T13
GND	C01	REGD1	N11	RXD6	C07	TX3	N01	TXD30	P13
GND	C13	REGD2	R10	RXD7	A07	TX4	M03	TXD31	R12
GND	E13	REGD3	T10	RXD8	B07	TX5	M02	TXDC	G13
GND	G07	REGD4	P10	RXD9	D07	TX6	L04	TXENn	E16
GND	G08	REGD5	N10	RXD10	B08	TX7	L01	TXEOF	E14
GND	G09	REGD6	P09	RXD11	A08	TX8	L02	TXSOF	E15
GND	G10	REGD7	N09	RXD12	C08	TX9	K04	TXWM1n	G16
GND	H07	REGD8	N08	RXD13	D08	TXBE0	F15	TXWM2n	G15
GND	H08	REGD9	P08	RXD14	C09	TXBE1	F16	VCC	A01
GND	H09	REGD10	T08	RXD15	B09	TXBE2	F14	VCC	A06
GND	H10	REGD11	R08	RXD16	A09	TXBE3	F13	VCC	B06
GND	J07	REGD12	N07	RXD17	D10	TXCRCn	H15	VCC	B11
GND	J08	REGD13	P07	RXD18	C10	TXD0	H14	VCC	B14
GND	J09	REGD14	T07	RXD19	B10	TXD1	H13	VCC	C02
GND	J10	REGD15	N06	RXD20	A10	TXD2	J13	VCC	C03
GND	K07	REGINT	P05	RXD21	A11	TXD3	J14	VCC	C06
GND	K08	REGRDn	R06	RXD22	C11	TXD4	J16	VCC	D01
GND	K09	REGWRn	N05	RXD23	A12	TXD5	J15	VCC	D02
GND	K10	RESERVED	D03	RXD24	D12	TXD6	K13	VCC	D09
GND	K15	RESERVED	N12	RXD25	B12	TXD7	K14	VCC	D11
GND	L03	RESETn	P12	RXD26	C12	TXD8	K16	VCC	D13
GND	M01	RX0	F02	RXD27	A13	TXD9	L13	VCC	D14
GND	N03	RX1	F03	RXD28	B13	TXD10	L14	VCC	D16
GND	N04	RX2	F04	RXD29	A14	TXD11	L15	VCC	E01
GND	R11	RX3	G02	RXD30	A15	TXD12	L16	VCC	E03
GND	T04	RX4	G01	RXD31	A16	TXD13	M13	VCC	G14
GND	T06	RX5	G03	RXDC	C16	TXD14	M14	VCC	J03
LCK_REFn	J02	RX6	G04	RXENn	B02	TXD15	M15	VCC	J04
LINKn	T01	RX7	H02	RXEOF	A02	TXD16	N16	VCC	M04
RBC0	H04	RX8	H01	RXOEn	B01	TXD17	N14	VCC	M16
RBC1	J01	RX9	H03	RXSOF	B03	TXD18	N15	VCC	N13
REGA0	T02	RXABORT	C14	RXWM1	B15	TXD19	P14	VCC	R02
REGA1	T03	RXBE0	D04	RXWM2	B16	TXD20	P16	VCC	R07
REGA2	R03	RXBE1	C04	SCLK	D15	TXD21	R16	VCC	R09
REGA3	P03	RXBE2	B04	SD	F01	TXD22	P15	VCC	T09
REGA4	R04	RXBE3	A03	TAP	E02	TXD23	R15		
REGA5	P04	RXD0	A04	TBC	K01	TXD24	T16		

Copyright © 2000–2001 by LSI Logic Corporation. All rights reserved.

6.5 Package Mechanical Dimensions

The 8101 Gigabit Ethernet Controller is available in the 208-pin Plastic Quad Flat Pack (PQFP) as shown in Figure 6.14. and the 8104 Ball Grid Array Package as shown in Figure 6.15.

Figure 6.14 208-Pin PQFP Mechanical Drawing

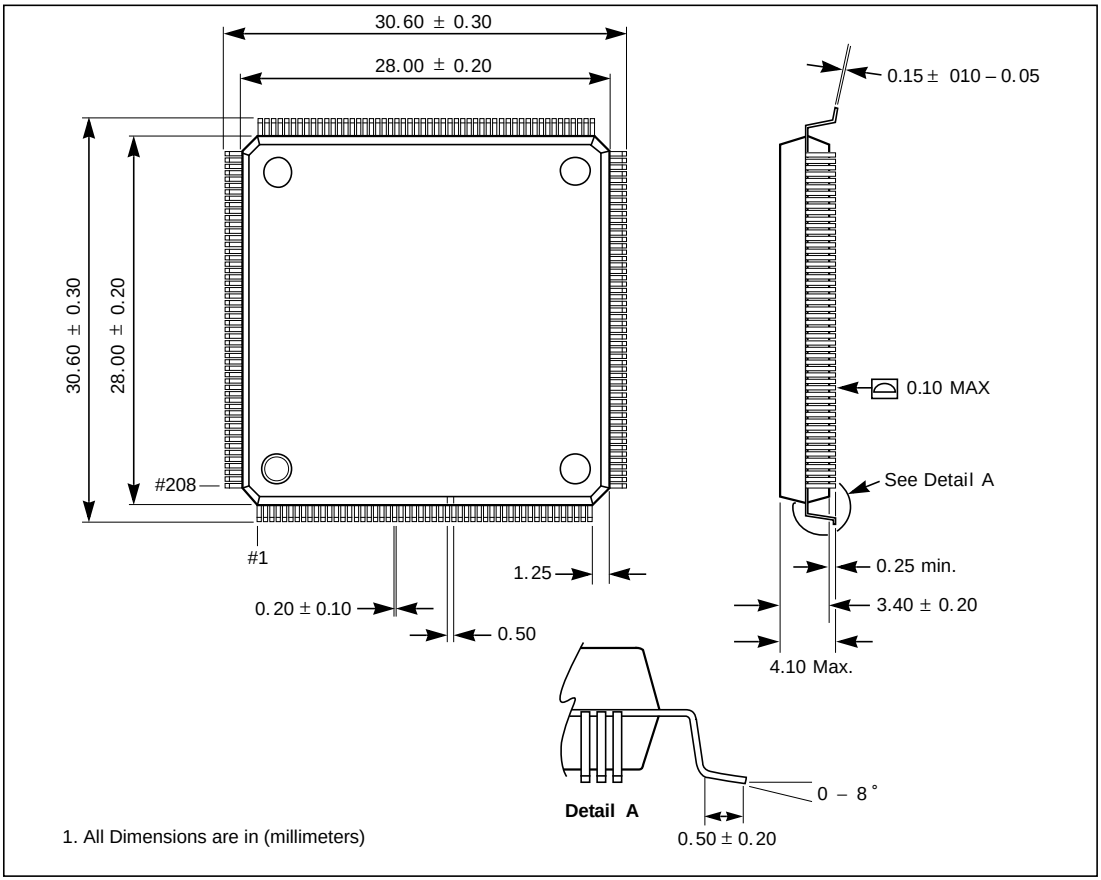

Note: This drawing may not be the latest version.

Copyright © 2000–2001 by LSI Logic Corporation. All rights reserved.

Figure 6.15 208 mini-BGA (HG) Mechanical Drawing

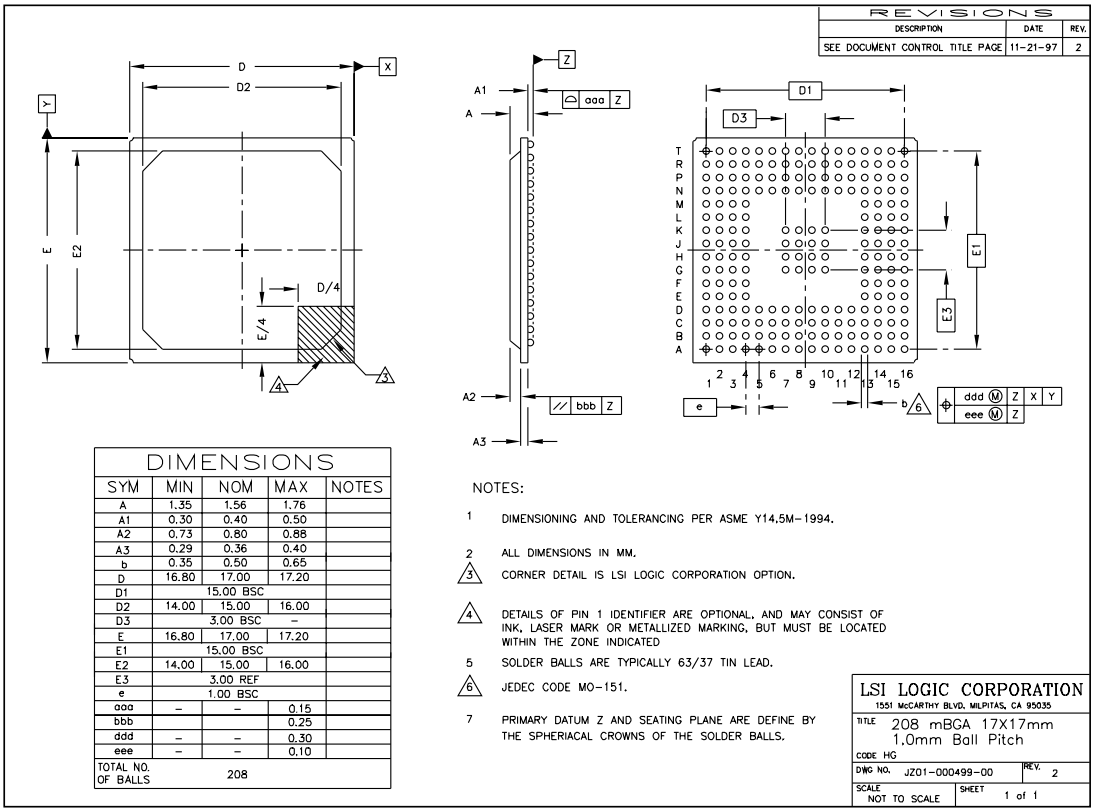

DIMENSIONS				
SYM	MIN	NOM	MAX	NOTES
A	1.35	1.56	1.76	
A1	0.30	0.40	0.50	
A2	0.73	0.80	0.88	
A3	0.29	0.36	0.40	
b	0.35	0.50	0.65	
D	16.80	17.00	17.20	
D1		15.00 BSC		
D2	14.00	15.00	16.00	
D3		3.00 BSC	–	
E	16.80	17.00	17.20	
E1		15.00 BSC		
E2	14.00	15.00	16.00	
E3		3.00 REF		
e		1.00 BSC		
aaa	–	–	0.15	
bbb			0.25	
ddd	–	–	0.30	
eee	–	–	0.10	
TOTAL NO. OF BALLS		208		

Important: **This drawing may not be the latest version. For board layout and manufacturing, obtain the most recent engineering drawings from your LSI Logic marketing representative by requesting the outline drawing for package code HG.**

Copyright © 2000–2001 by LSI Logic Corporation. All rights reserved.

Copyright © 2000–2001 by LSI Logic Corporation. All rights reserved.

Customer Feedback

We would appreciate your feedback on this document. Please copy the following page, add your comments, and fax it to us at the number shown.

If appropriate, please also fax copies of any marked-up pages from this document.

Important: Please include your name, phone number, fax number, and company address so that we may contact you directly for clarification or additional information.

Thank you for your help in improving the quality of our documents.

Reader's Comments

Fax your comments to: LSI Logic Corporation
Technical Publications
M/S E-198
Fax: 408.433.4333

Please tell us how you rate this document: *8101/8104 Gigabit Ethernet Controller.* Place a check mark in the appropriate blank for each category.

	Excellent	Good	Average	Fair	Poor
Completeness of information	____	____	____	____	____
Clarity of information	____	____	____	____	____
Ease of finding information	____	____	____	____	____
Technical content	____	____	____	____	____
Usefulness of examples and illustrations	____	____	____	____	____
Overall manual	____	____	____	____	____

What could we do to improve this document?

_____

_____

_____

_____

If you found errors in this document, please specify the error and page number. If appropriate, please fax a marked-up copy of the page(s).

_____

_____

_____

Please complete the information below so that we may contact you directly for clarification or additional information.

Name _____ Date _____

Telephone _____ Fax _____

Title _____

Department _____ Mail Stop _____

Company Name _____

Street _____

City, State, Zip _____

You can find a current list of our U.S. distributors, international distributors, and sales offices and design resource centers on our web site at

http://www.lsilogic.com/contacts/na_salesoffices.html