www.DataSheet4U.com

OKI Semiconductor

This version: Jan. 1998
Previous version: Dec. 1996

MSM54C865

65,536-Word × 8-Bit Multiport DRAM

DESCRIPTION

The MSM54C865 is a 512Kbit CMOS multiport DRAM composed of a 65,536-word by 8-bit dynamic RAM and a 256-word by 8-bit SAM. Its RAM and SAM operate independently and asynchronously.

The MSM54C865 supports three types of operaton: random access to RAM port, high speed serial access to SAM port and bidirectional transfer of data between any selected row in the RAM port and the SAM port. In addition to the conventional multiport DRAM operating modes, the MSM54C865 features the block write and flash write functions on the RAM port and a split data transfer capability on the SAM port. The SAM port requires no refresh operation because it uses static CMOS flip-flops.

FEATURES

- Single power supply: 5 V ±10%
- Full TTL compatibility
- Multiport organization
  RAM : 64K word × 8 bits
  SAM : 256 word × 8 bits
- Fast page mode
- Write per bit
- Masked flash write
- Masked block write
- $\overline{\text{RAS}}$ only refresh
- $\overline{\text{CAS}}$ before $\overline{\text{RAS}}$ refresh
- Hidden refresh
- Serial read/write
- 256 tap location
- Bidirectional data transfer
- Split transfer
- Masked write transfer
- Refresh :256 cycles/4 ms
- Package options:

40-pin 475 mil plastic ZIP	(ZIP40-P-475-1.27)	(Product : MSM54C865-xxZS)
40-pin 400 mil plastic SOJ	(SOJ40-P-400-1.27)	(Product : MSM54C865-xxJS)
		xx indicates speed rank.

PRODUCT FAMILY

Family	Access Time		Cycle Time		Power Dissipation	
	RAM	SAM	RAM	SAM	Operating	Standby
MSM54C865-70	70 ns	25 ns	140 ns	30 ns	120 mA	8 mA
MSM54C865-80	80 ns	25 ns	150 ns	30 ns	110 mA	8 mA
MSM54C865-10	100 ns	25 ns	180 ns	30 ns	100 mA	8 mA

www.DataSheet4U.com

www.DataSheet4U.com

PIN CONFIGURATION (TOP VIEW)

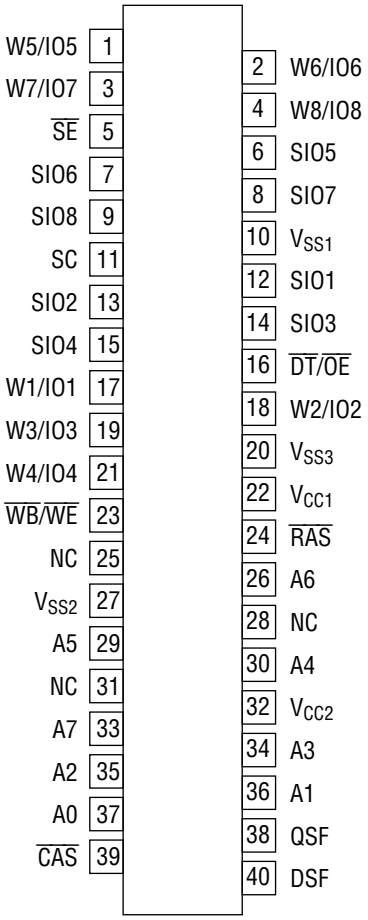

40-Pin Plastic ZIP

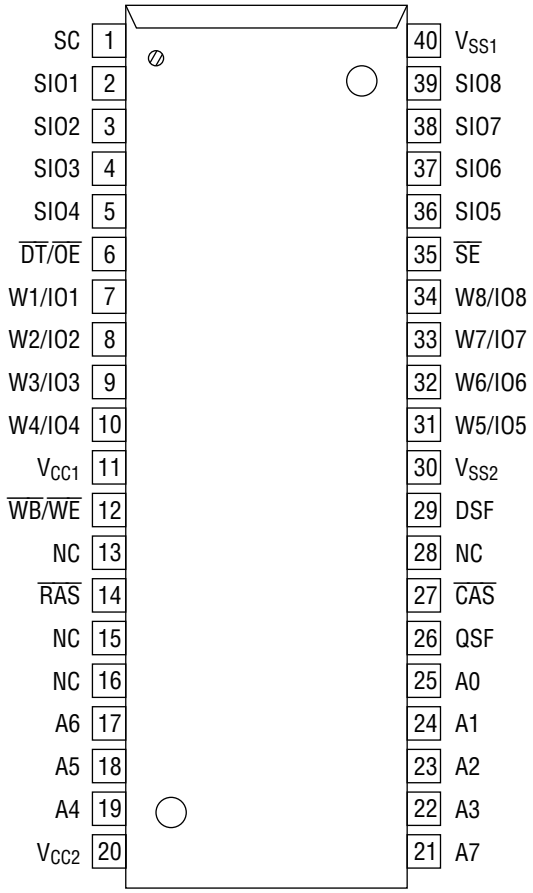

40-Pin Plastic SOJ

Pin Name	Function	Pin Name	Function
A0 - A7	Address Input	SC	Serial Clock
W1/IO1 - W8/IO8	RAM Inputs/Outputs	$\overline{SE}$	SAM Port Enable
SIO1 - SIO8	SAM Inputs/Outputs	DSF	Special Function Input
$\overline{RAS}$	Row Address Strobe	QSF	Special Function Output
$\overline{CAS}$	Column Address Strobe	V_{CC}	Power Supply (5 V)
$\overline{WB/WE}$	Write per Bit/Write Enable	V_{SS}	Ground (0 V)
$\overline{DT/OE}$	Transfer/Output Enable	NC	No Connection

Note : The same power supply voltage must be provided to every V_{CC} pin, and the same GND voltage level must be provided to every V_{SS} pin.

www.DataSheet4U.com

www.DataSheet4U.com

BLOCK DIAGRAM

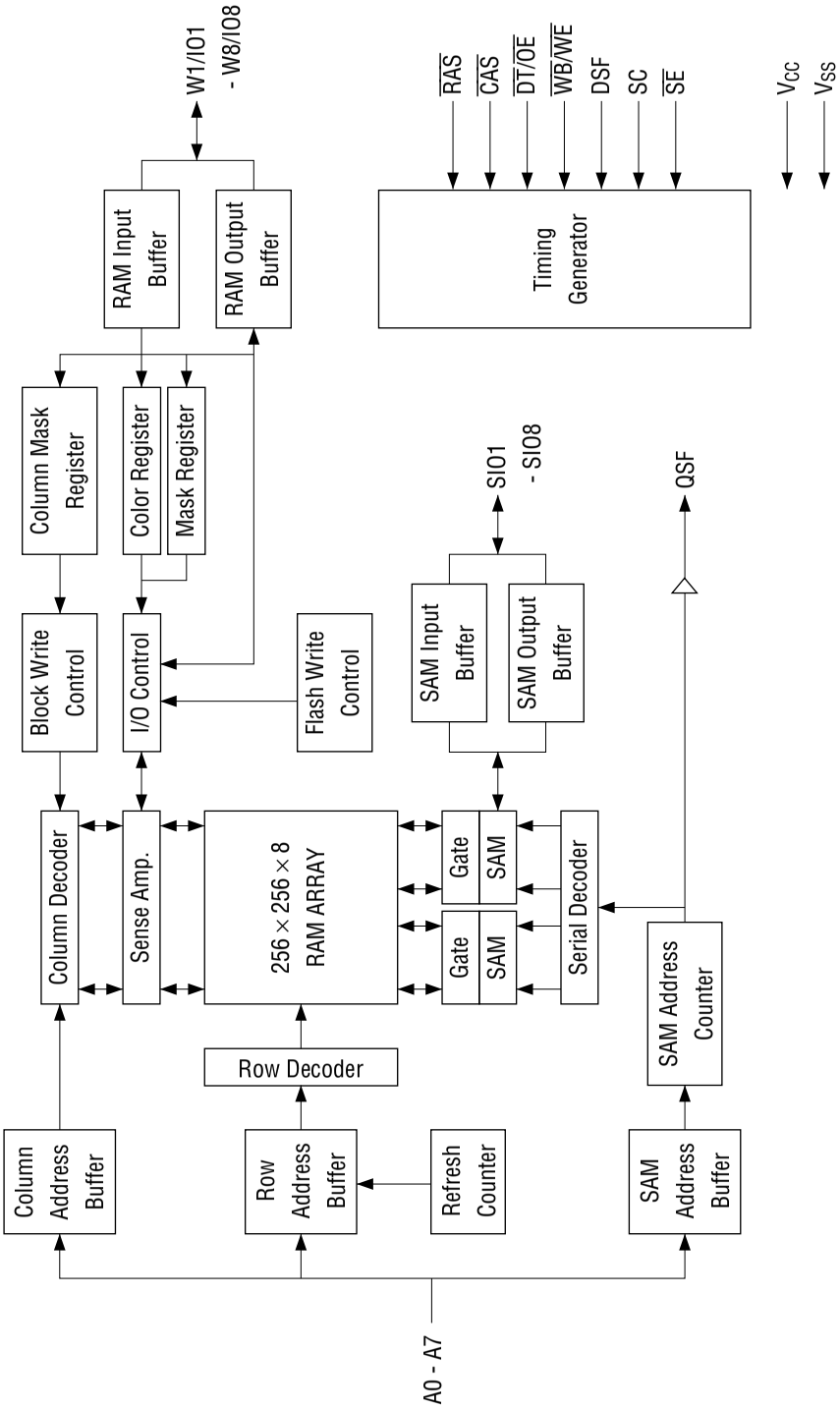

www.DataSheet4U.com

www.DataSheet4U.com

ELECTRICAL CHARACTERISTICS

Absolute Maximum Ratings

(Note: 16)

Parameter	Symbol	Condition	Rating	Unit
Input Output Voltage	V_T	Ta = 25°C	–1.0 to 7.0	V
Output Current	I_{OS}	Ta = 25°C	50	mA
Power Dissipation	P_D	Ta = 25°C	1	W
Operating Temperature	T_{opr}	—	0 to 70	°C
Storage Temperature	T_{stg}	—	–55 to 150	°C

Recommended Operating Conditions

(Ta = 0°C to 70°C) (Note: 17)

Parameter	Symbol	Min.	Typ.	Max.	Unit
Power Supply Voltage	V_{CC}	4.5	5.0	5.5	V
Input High Voltage	V_{IH}	2.4	—	6.5	V
Input Low Voltage	V_{IL}	–1.0	—	0.8	V

Capacitance

(V_{CC} = 5 V ±10%, f = 1 MHz, Ta = 25°C)

Parameter	Symbol	Min.	Max.	Unit
Input Capacitance	C_I	—	7	pF
Input/Output Capacitance	$C_{I/O}$	—	9	pF
Output Capacitance	C_O(QSF)	—	9	pF

Note: This parameter is periodically sampled and is not 100% tested.

DC Characteristics 1

Parameter	Symbol	Condition	Min.	Max.	Unit
Output "H" Level Voltage	V_{OH}	I_{OH} = –2 mA	2.4	—	V
Output "L" Level Voltage	V_{OL}	I_{OL} = 2 mA	—	0.4	
Input Leakage Current	I_{LI}	$0 \le V_{IN} \le V_{CC}$ All other pins not under test = 0 V	–10	10	µA
Output Leakage Current	I_{LO}	$0 \le V_{OUT} \le 5.5$ V Output Disable	–10	10	

www.DataSheet4U.com

www.DataSheet4U.com

DC Characteristics 2

(V_{CC} = 5 V ±10%, Ta = 0°C to 70°C)

Item (RAM)	SAM	Symbol	-70 Max.	-80 Max.	-10 Max.	Unit	Note
Operating Current	Standby	I_{CC1}	85	75	65	mA	1, 2
($\overline{RAS}$, $\overline{CAS}$ Cycling, $t_{RC} = t_{RC}$ min.)	Active	I_{CC1A}	120	110	100		1, 2
Standby Current	Standby	I_{CC2}	8	8	8		3
($\overline{RAS}$, $\overline{CAS} = V_{IH}$)	Active	I_{CC2A}	50	45	40		1, 2
$\overline{RAS}$ Only Refresh Current	Standby	I_{CC3}	85	75	65		1, 2
($\overline{RAS}$ Cycling, $\overline{CAS} = V_{IH}$, $t_{RC} = t_{RC}$ min.)	Active	I_{CC3A}	120	110	100		1, 2
Page Mode Current	Standby	I_{CC4}	70	65	60		1, 2
($\overline{RAS} = V_{IL}$, $\overline{CAS}$ Cycling, $t_{PC} = t_{PC}$ min.)	Active	I_{CC4A}	120	110	100		1, 2
$\overline{CAS}$ before $\overline{RAS}$ Refresh Current	Standby	I_{CC5}	85	75	65		1, 2
($\overline{RAS}$ Cycling, $\overline{CAS}$ before $\overline{RAS}$, $t_{RC} = t_{RC}$ min.)	Active	I_{CC5A}	120	110	100		1, 2
Data Transfer Current	Standby	I_{CC6}	85	75	65		1, 2
($\overline{RAS}$, $\overline{CAS}$ Cycling, $t_{RC} = t_{RC}$ min.)	Active	I_{CC6A}	120	110	100		1, 2
Flash Write Current	Standby	I_{CC7}	85	75	65		1, 2
($\overline{RAS}$, $\overline{CAS}$ Cycling, $t_{RC} = t_{RC}$ min.)	Active	I_{CC7A}	120	110	100		1, 2
Block Write Current	Standby	I_{CC8}	85	75	65		1, 2
($\overline{RAS}$, $\overline{CAS}$ Cycling, $t_{RC} = t_{RC}$ min.)	Active	I_{CC8A}	120	110	100		1, 2

www.DataSheet4U.com

www.DataSheet4U.com

AC Characteristics (1/3)

(V_{CC} = 5 V ±10%, Ta = 0°C to 70°C) Note 4, 5, 6

Parameter	Symbol	-70		-80		-10		Unit	Note
		Min.	Max.	Min.	Max.	Min.	Max.		
Random Read or Write Cycle Time	t_{RC}	140	—	150	—	180	—	ns	
Read Modify Write Cycle Time	t_{RWC}	195	—	195	—	235	—	ns	
Fast Page Mode Cycle Time	t_{PC}	45	—	50	—	55	—	ns	
Fast Page Mode Read Modify Write Cycle Time	t_{PRWC}	90	—	90	—	100	—	ns	
Access Time from $\overline{RAS}$	t_{RAC}	—	70	—	80	—	100	ns	7, 13
Access Time from Column Address	t_{AA}	—	35	—	40	—	55	ns	7, 13
Access Time from $\overline{CAS}$	t_{CAC}	—	20	—	25	—	25	ns	7, 14
Access Time from $\overline{CAS}$ Precharge	t_{CPA}	—	40	—	45	—	50	ns	7, 14
Output Buffer Turn-off Delay	t_{OFF}	0	20	0	20	0	20	ns	9
Transition Time (Rise and Fall)	t_T	3	35	3	35	3	35	ns	6
$\overline{RAS}$ Precharge Time	t_{RP}	60	—	60	—	70	—	ns	
$\overline{RAS}$ Pulse Width	t_{RAS}	70	10k	80	10k	100	10k	ns	
$\overline{RAS}$ Pulse Width (Fast Page Mode Only)	t_{RASP}	70	100k	80	100k	100	100k	ns	
$\overline{RAS}$ Hold Time	t_{RSH}	20	—	25	—	25	—	ns	
$\overline{CAS}$ Hold Time	t_{CSH}	70	—	80	—	100	—	ns	
$\overline{CAS}$ Pulse Width	t_{CAS}	20	10k	25	10k	25	10k	ns	
$\overline{RAS}$ to $\overline{CAS}$ Delay Time	t_{RCD}	20	50	20	55	20	75	ns	13
$\overline{RAS}$ to Column Address Delay Time	t_{RAD}	15	35	15	40	20	50	ns	13
Column Address to $\overline{RAS}$ Lead Time	t_{RAL}	35	—	40	—	55	—	ns	
$\overline{CAS}$ to $\overline{RAS}$ Precharge Time	t_{CRP}	10	—	10	—	10	—	ns	
$\overline{CAS}$ Precharge Time	t_{CPN}	10	—	10	—	10	—	ns	
$\overline{CAS}$ Precharge Time (Fast Page Mode)	t_{CP}	10	—	10	—	10	—	ns	
Row Address Set-up Time	t_{ASR}	0	—	0	—	0	—	ns	
Row Address Hold Time	t_{RAH}	10	—	10	—	10	—	ns	
Column Address Set-up Time	t_{ASC}	0	—	0	—	0	—	ns	
Column Address Hold Time	t_{CAH}	15	—	15	—	15	—	ns	
Column Address Hold Time referenced to $\overline{RAS}$	t_{AR}	55	—	55	—	70	—	ns	
Read Command Set-up Time	t_{RCS}	0	—	0	—	0	—	ns	
Read Command Hold Time	t_{RCH}	0	—	0	—	0	—	ns	10
Read Command Hold Time referenced to $\overline{RAS}$	t_{RRH}	0	—	0	—	0	—	ns	10
Write Command Hold Time	t_{WCH}	15	—	15	—	15	—	ns	
Write Command Hold Time referenced to $\overline{RAS}$	t_{WCR}	55	—	55	—	70	—	ns	
Write Command Pulse Width	t_{WP}	15	—	15	—	15	—	ns	
Write Command to $\overline{RAS}$ Lead Time	t_{RWL}	20	—	20	—	25	—	ns	
Write Command to $\overline{CAS}$ Lead Time	t_{CWL}	20	—	20	—	25	—	ns	

www.DataSheet4U.com

www.DataSheet4U.com

AC Characteristics (2/3)

(V_{CC} = 5 V ±10%, Ta = 0°C to 70°C) Note 4, 5, 6

Parameter	Symbol	-70		-80		-10		Unit	Note
		Min.	Max.	Min.	Max.	Min.	Max.		
Data Set-up Time	t_{DS}	0	—	0	—	0	—	ns	11
Data Hold Time	t_{DH}	15	—	15	—	15	—	ns	11
Data Hold Time referenced to $\overline{RAS}$	t_{DHR}	55	—	55	—	70	—	ns	
Write Command Set-up Time	t_{WCS}	0	—	0	—	0	—	ns	12
$\overline{RAS}$ to $\overline{WE}$ Delay Time	t_{RWD}	100	—	100	—	130	—	ns	12
Column Address to $\overline{WE}$ Delay Time	t_{AWD}	65	—	65	—	80	—	ns	12
$\overline{CAS}$ to $\overline{WE}$ Delay Time	t_{CWD}	45	—	45	—	55	—	ns	12
Data to $\overline{CAS}$ Delay Time	t_{DZC}	0	—	0	—	0	—	ns	
Data to $\overline{OE}$ Delay Time	t_{DZO}	0	—	0	—	0	—	ns	
Access Time from $\overline{OE}$	t_{OEA}	—	20	—	20	—	25	ns	7
Output Buffer Turn-off Delay from $\overline{OE}$	t_{OEZ}	0	10	0	10	0	20	ns	9
$\overline{OE}$ to Data Delay Time	t_{OED}	10	—	10	—	20	—	ns	
$\overline{OE}$ Command Hold Time	t_{OEH}	10	—	10	—	20	—	ns	
$\overline{RAS}$ Hold Time referenced to $\overline{OE}$	t_{ROH}	15	—	15	—	15	—	ns	
$\overline{CAS}$ Set-up Time for $\overline{CAS}$ before $\overline{RAS}$ Cycle	t_{CSR}	10	—	10	—	10	—	ns	
$\overline{CAS}$ Hold Time for $\overline{CAS}$ before $\overline{RAS}$ Cycle	t_{CHR}	10	—	10	—	10	—	ns	
$\overline{RAS}$ Precharge to $\overline{CAS}$ Active Time	t_{RPC}	0	—	0	—	0	—	ns	
Refresh Period	t_{REF}	—	4	—	4	—	4	ms	
$\overline{WB}$ Set-up Time	t_{WSR}	0	—	0	—	0	—	ns	
$\overline{WB}$ Hold Time	t_{RWH}	15	—	15	—	15	—	ns	
DSF Set-up Time referenced to $\overline{RAS}$	t_{FSR}	0	—	0	—	0	—	ns	
DSF Hold Time referenced to $\overline{RAS}$ (1)	t_{RFH}	15	—	15	—	15	—	ns	
DSF Hold Time referenced to $\overline{RAS}$ (2)	t_{FHR}	55	—	55	—	70	—	ns	
DSF Set-up Time referenced to $\overline{CAS}$	t_{FSC}	0	—	0	—	0	—	ns	
DSF Hold Time referenced to $\overline{CAS}$	t_{CFH}	15	—	15	—	15	—	ns	
Write Per Bit Mask Data Set-up Time	t_{MS}	0	—	0	—	0	—	ns	
Write Per Bit Mask Data Hold Time	t_{MH}	15	—	15	—	15	—	ns	
$\overline{DT}$ High Set-up Time	t_{THS}	0	—	0	—	0	—	ns	
$\overline{DT}$ High Hold Time	t_{THH}	15	—	15	—	15	—	ns	
$\overline{DT}$ Low Set-up Time	t_{TLS}	0	—	0	—	0	—	ns	
$\overline{DT}$ Low Hold Time	t_{TLH}	15	10k	15	10k	15	10k	ns	
$\overline{DT}$ Low Hold Time referenced to $\overline{RAS}$ (Real Time Read Transfer)	t_{RTH}	60	10k	65	10k	80	10k	ns	
$\overline{DT}$ Low Hold Time referenced to Column Address (Real Time Read Transfer)	t_{ATH}	25	—	30	—	30	—	ns	
$\overline{DT}$ Low Hold Time referenced to $\overline{CAS}$ (Real Time Read Transfer)	t_{CTH}	20	—	25	—	25	—	ns	
$\overline{SE}$ Set-up Time referenced to $\overline{RAS}$	t_{ESR}	0	—	0	—	0	—	ns	
$\overline{SE}$ Hold Time referenced to $\overline{RAS}$	t_{REH}	15	—	15	—	15	—	ns	

www.DataSheet4U.com

www.DataSheet4U.com

AC Characteristics (3/3)

(V_{CC} = 5 V ±10%, Ta = 0°C to 70°C) Note 4, 5, 6

Parameter	Symbol	-70		-80		-10		Unit	Note
		Min.	Max.	Min.	Max.	Min.	Max.		
$\overline{DT}$ to $\overline{RAS}$ Precharge Time	t_{TRP}	60	—	60	—	70	—	ns	
$\overline{DT}$ Precharge Time	t_{TP}	20	—	20	—	30	—	ns	
$\overline{RAS}$ to First SC Delay Time (Read Transfer)	t_{RSD}	70	—	80	—	100	—	ns	
Column Address to First SC Delay Time (Read Transfer)	t_{ASD}	45	—	45	—	50	—	ns	
$\overline{CAS}$ to First SC Delay Time (Read Transfer)	t_{CSD}	20	—	25	—	25	—	ns	
Last SC to $\overline{DT}$ Lead Time (Real Time Read Transfer)	t_{TSL}	5	—	5	—	5	—	ns	
$\overline{DT}$ to First SC Delay Time (Read Transfer)	t_{TSD}	15	—	15	—	15	—	ns	
Last SC to $\overline{RAS}$ Set-up Time (Serial Input)	t_{SRS}	25	—	25	—	30	—	ns	
$\overline{RAS}$ to First SC Delay Time (Serial Input)	t_{SRD}	20	—	20	—	25	—	ns	
$\overline{RAS}$ to Serial Input Delay Time	t_{SDD}	40	—	40	—	50	—	ns	
Serial Output Buffer Turn-off Delay from $\overline{RAS}$ (Pseudo Write Transfer)	t_{SDZ}	10	40	10	40	10	50	ns	9
SC Cycle Time	t_{SCC}	30	—	30	—	30	—	ns	
SC Pulse Width (SC High Time)	t_{SC}	10	—	10	—	10	—	ns	
SC Precharge Time (SC Low Time)	t_{SCP}	10	—	10	—	10	—	ns	
Access Time from SC	t_{SCA}	—	25	—	25	—	25	ns	8
Serial Output Hold Time from SC	t_{SOH}	5	—	5	—	5	—	ns	
Serial Input Set-up Time	t_{SDS}	0	—	0	—	0	—	ns	
Serial Input Hold Time	t_{SDH}	15	—	15	—	15	—	ns	
Access Time from $\overline{SE}$	t_{SEA}	—	25	—	25	—	25	ns	8
$\overline{SE}$ Pulse Width	t_{SE}	25	—	25	—	25	—	ns	
$\overline{SE}$ Precharge Time	t_{SEP}	25	—	25	—	25	—	ns	
Serial Output Buffer Turn-off Delay from $\overline{SE}$	t_{SEZ}	0	20	0	20	0	20	ns	9
Serial Input to $\overline{SE}$ Delay Time	t_{SZE}	0	—	0	—	0	—	ns	
Serial Input to First SC Delay Time	t_{SZS}	0	—	0	—	0	—	ns	
Serial Write Enable Set-up Time	t_{SWS}	5	—	5	—	5	—	ns	
Serial Write Enable Hold Time	t_{SWH}	15	—	15	—	15	—	ns	
Serial Write Disable Set-up Time	t_{SWIS}	5	—	5	—	5	—	ns	
Serial Write Disable Hold Time	t_{SWIH}	15	—	15	—	15	—	ns	
Split Transfer Set-up Time	t_{STS}	25	—	30	—	30	—	ns	
Split Transfer Hold Time	t_{STH}	25	—	30	—	30	—	ns	
SC-QSF Delay Time	t_{SQD}	—	25	—	25	—	25	ns	
$\overline{DT}$-QSF Delay Time	t_{TQD}	—	25	—	25	—	25	ns	
$\overline{CAS}$-QSF Delay Time	t_{CQD}	—	35	—	35	—	35	ns	
$\overline{RAS}$-QSF Delay Time	t_{RQD}	—	75	—	75	—	85	ns	

www.DataSheet4U.com

www.DataSheet4U.com

Notes:
1. These parameters depend on output loading. Specified values are obtained with the output open.
2. These parameters are masured at minimum cycle test.
3. I_{CC2} (Max.) are mesured under the condition of TTL input level.
4. V_{IH} (Min.) and V_{IL} (Max.) are reference levels for measuring timing of input signals. Also, transition times are measured between V_{IH} and V_{IL}.
5. An initial pause of 200 µs is required after power-up followed by any 8 $\overline{RAS}$ cycles ($\overline{DT}/\overline{OE}$ "high") and any 8 SC cycles before proper divice operation is achieved. In the case of using an internal refresh counter, a minimum of 8 $\overline{CAS}$ before $\overline{RAS}$ initialization cycles in stead of 8 $\overline{RAS}$ cycles are required.
6. AC measurements assume t_T = 5 ns.
7. RAM port outputs are mesured with a load equivalent to 1 TTL load and 100 pF. Output reference levels are V_{OH}/V_{OL} = 2.4 V/1.0 V.
8. SAM port outputs are measured with a load equivalent to 1 TTL load and 30 pF. Output reference levels are V_{OH}/V_{OL} = 2.0 V/1.0 V.
9. t_{OFF} (Max.), t_{OEZ} (Max.), t_{SDZ} (Max.) and t_{SEZ} (Max.) difine the time at which the outputs achieve the open circuit condition and are not reference to output voltage levels.
10. Either t_{RCH} or t_{RRH} must be satisfied for a read cycle.
11. These parameters are referenced to $\overline{CAS}$ leading edge of early write cycles and to $\overline{WB}/\overline{WE}$ leading edge in $\overline{OE}$ controlled write cycles and read modify write cycles.
12. t_{WCS}, t_{RWD}, t_{CWD} and t_{AWD} are not restrictive operating parameters. They are included in the data sheet as electrical characteristics only.
    If $t_{WCS} \geq t_{WCS}$ (Min.), the cycle is an early write cycle, and the data out pin will remain open circuit (high impedance) throughout the entire cycle : If $t_{RWD} \geq t_{RWD}$ (Min.), $t_{CWD} \geq t_{CWD}$ (Min.) and $t_{AWD} \geq t_{AWD}$ (Min.) the cycle is a read-write cycle and the data out will contain data read from the selected cell : If neither of the above sets of conditions is satisfied, the condition of the data out (at access time) is indterminate.
13. Operation within the t_{RCD} (Max.) limit ensures that t_{RAC} (Max.) can be met. t_{RCD} (Max.) is specified as a reference point only : If t_{RCD} is greater than the specified t_{RCD} (Max.) limit, then access time is controlled by t_{CAC}.
14. Operation within the t_{RAD} (Max.) limit ensures that t_{RAC} (Max.) can be met. t_{RAD} (Max.) is specified as a reference point only : If t_{RAD} is greater than the specified t_{RAD} (Max.) limit, then access time is controlled by t_{AA}.
15. Input levels at the AC parameter measurement are 3.0 V/0 V.
16. Stresses greater than those listed under "Absolute Maximum Ratings" may cause permenent damege to the device.
17. All voltages are referenced to V_{SS}.

www.DataSheet4U.com

www.DataSheet4U.com

TIMING WAVEFORM

Read Cycle

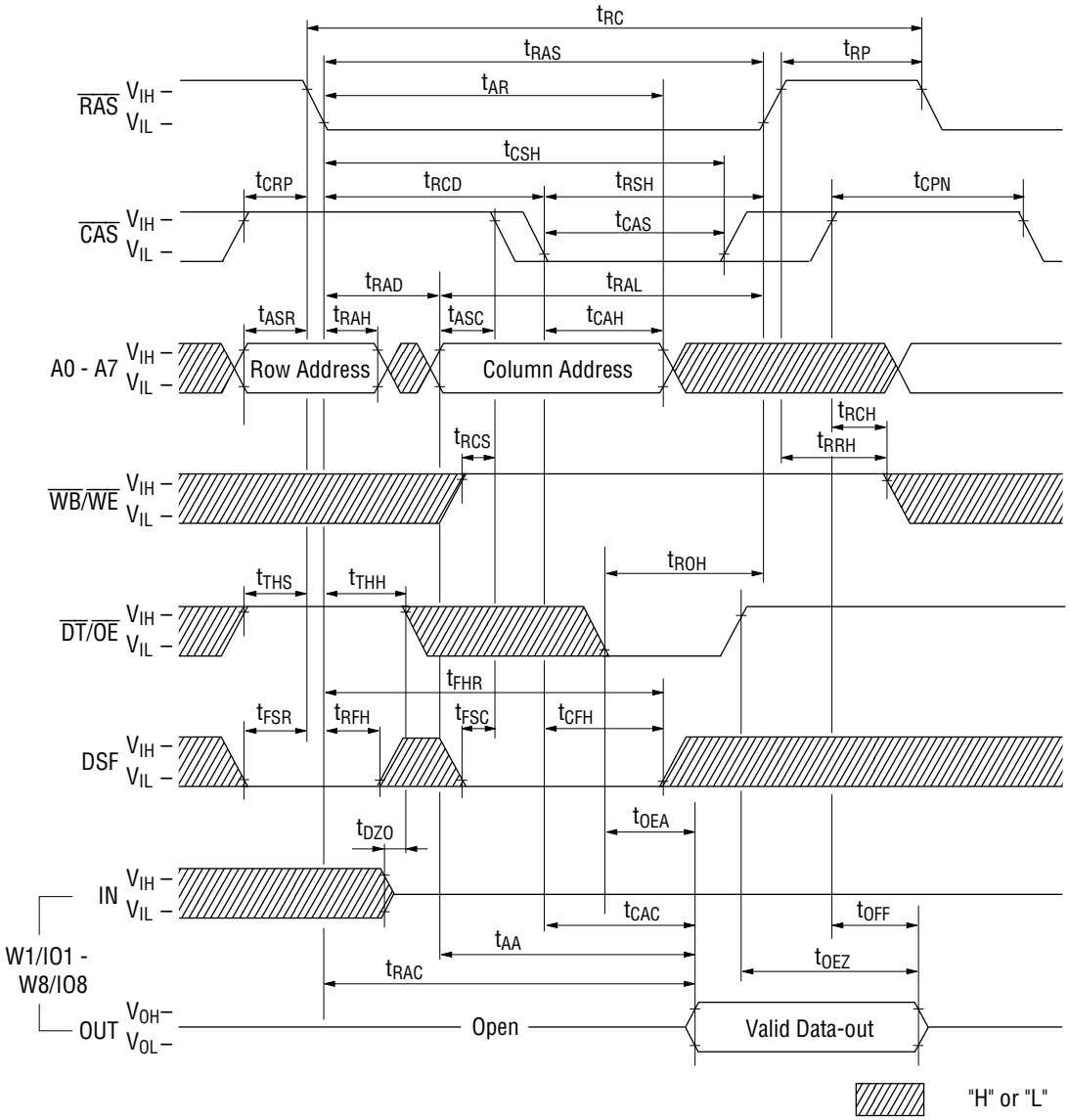

www.DataSheet4U.com

www.DataSheet4U.com

Write Cycle (Early Write)

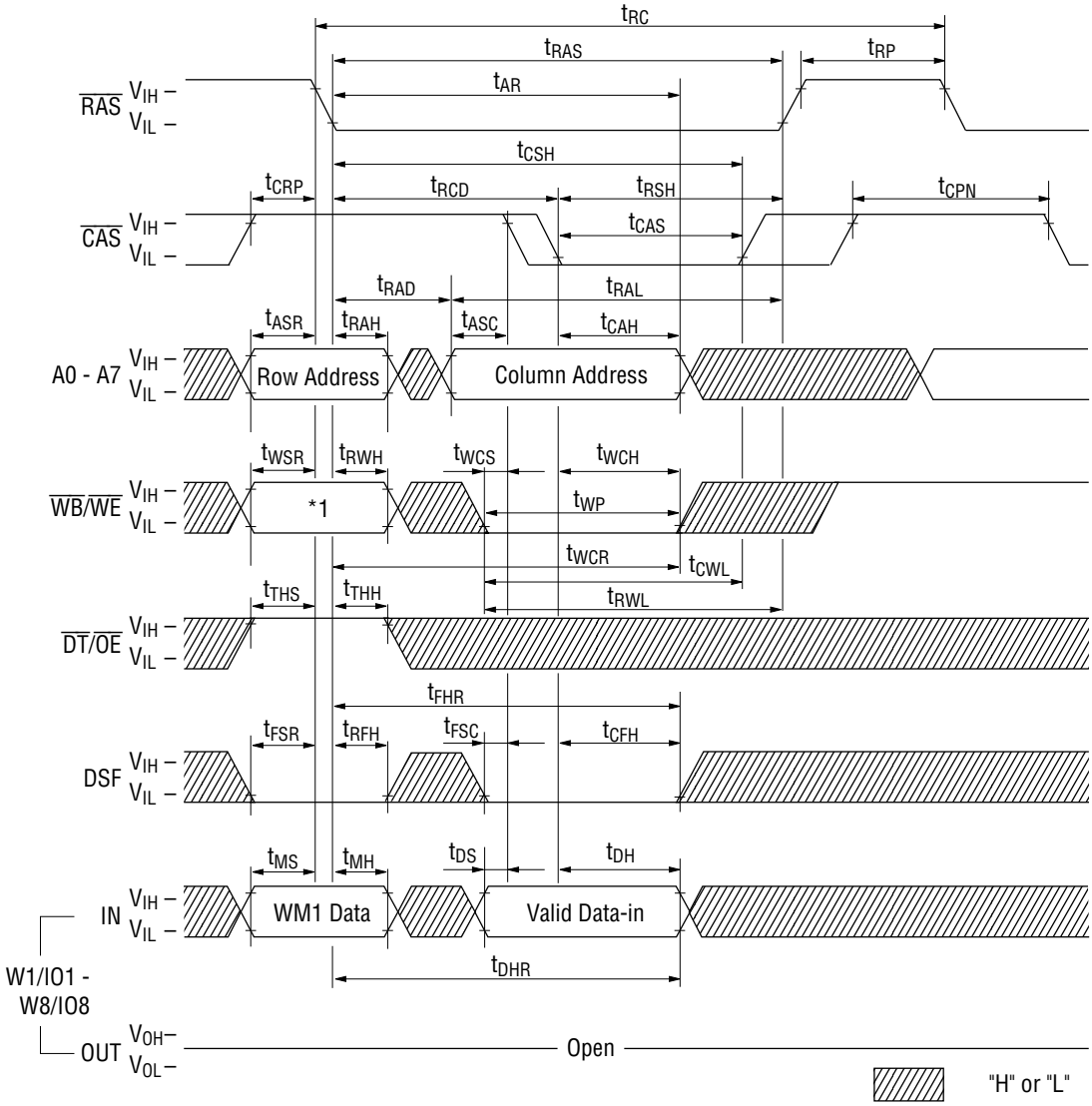

*1 $\overline{WB}/\overline{WE}$	W1/IO1 - W8/IO8	Cycle
0	WM1 data	Write per Bit
1	Don't Care	Normal Write

WM1 data: 0: Write Disable
1: Write Enable

www.DataSheet4U.com

www.DataSheet4U.com

Write Cycle ($\overline{OE}$ Control)

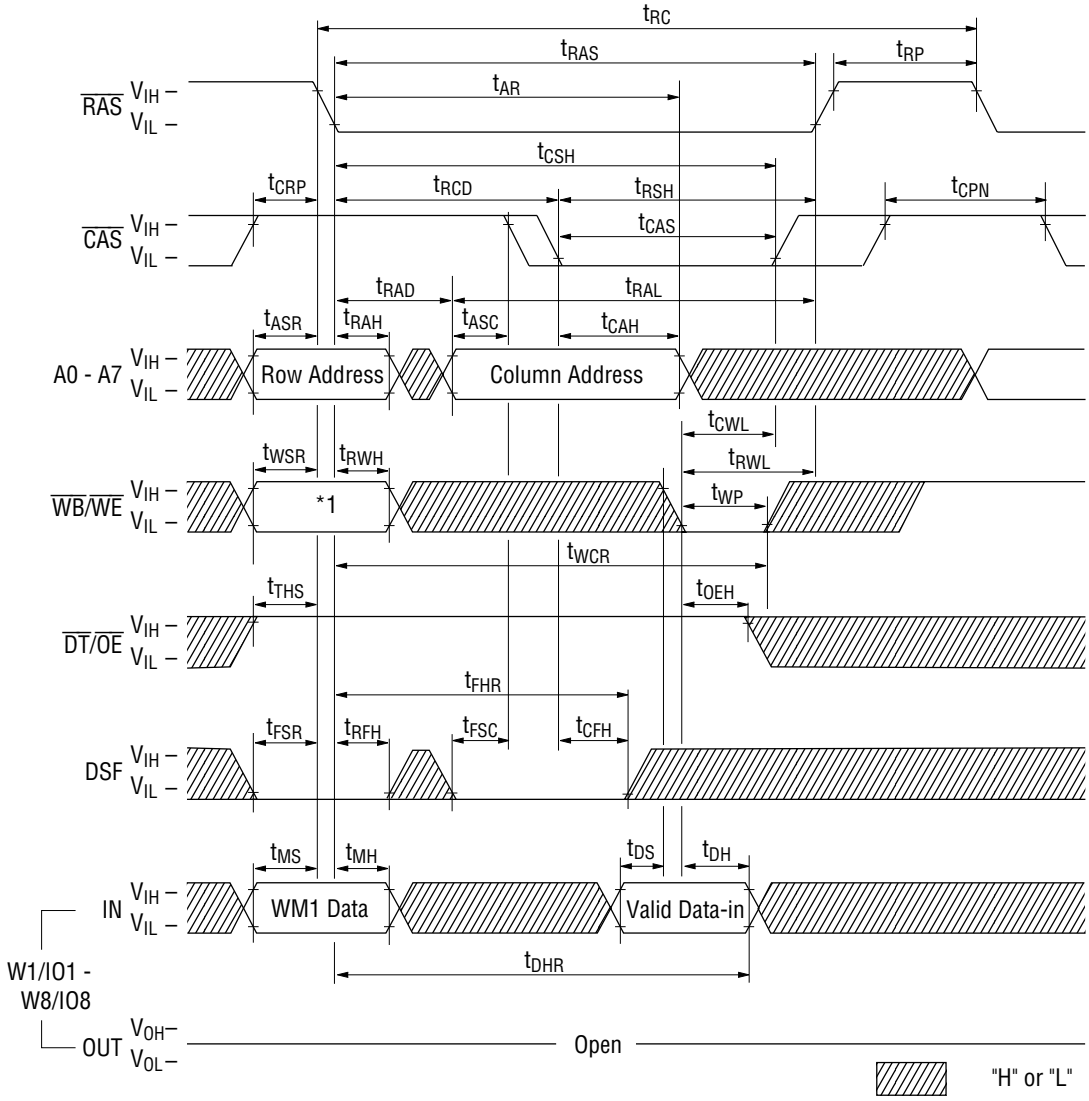

*1 $\overline{WB}/\overline{WE}$	W1/IO1 - W8/IO8	Cycle
0	WM1 data	Write per Bit
1	Don't Care	Normal Write

WM1 data: 0: Write Disable
1: Write Enable

www.DataSheet4U.com

www.DataSheet4U.com

Read Modify Write Cycle

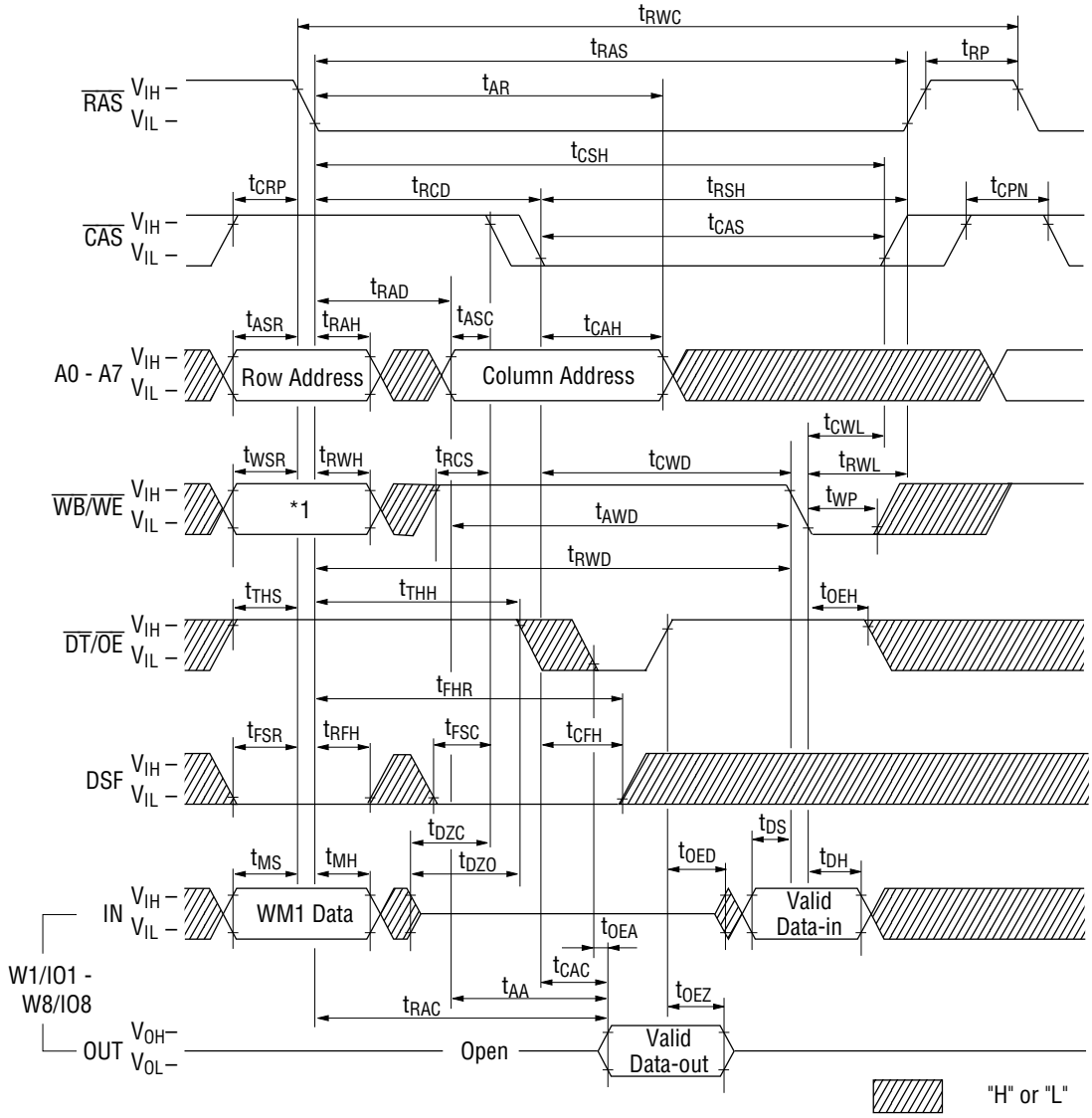

*1 $\overline{WB}/\overline{WE}$	W1/IO1 - W8/IO8	Cycle
0	WM1 data	Write per Bit
1	Don't Care	Normal Write

WM1 data: 0: Write Disable
1: Write Enable

www.DataSheet4U.com

www.DataSheet4U.com

Fast Page Mode Read Cycle

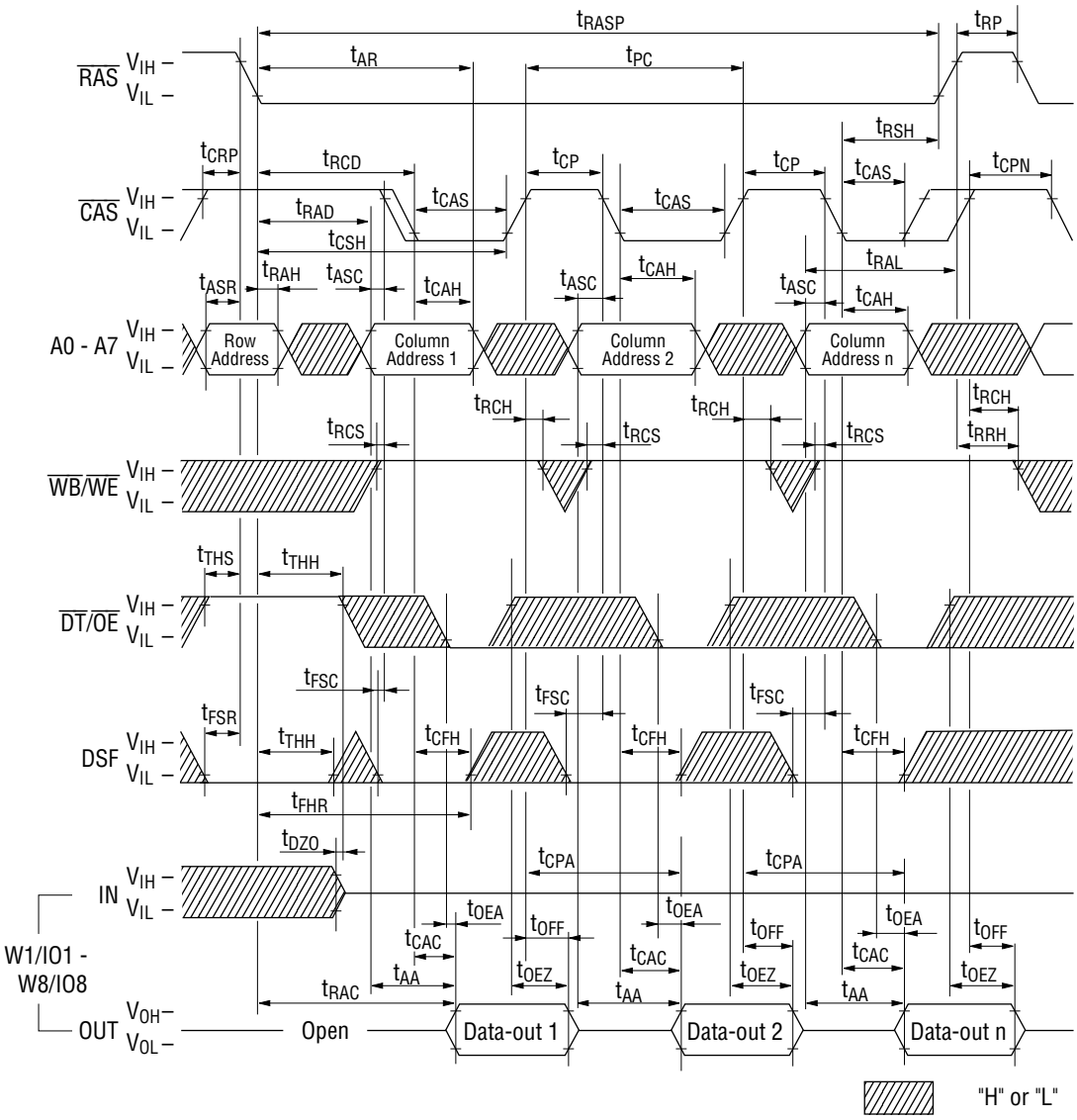

www.DataSheet4U.com

www.DataSheet4U.com

Fast Page Mode Write Cycle (Early Write)

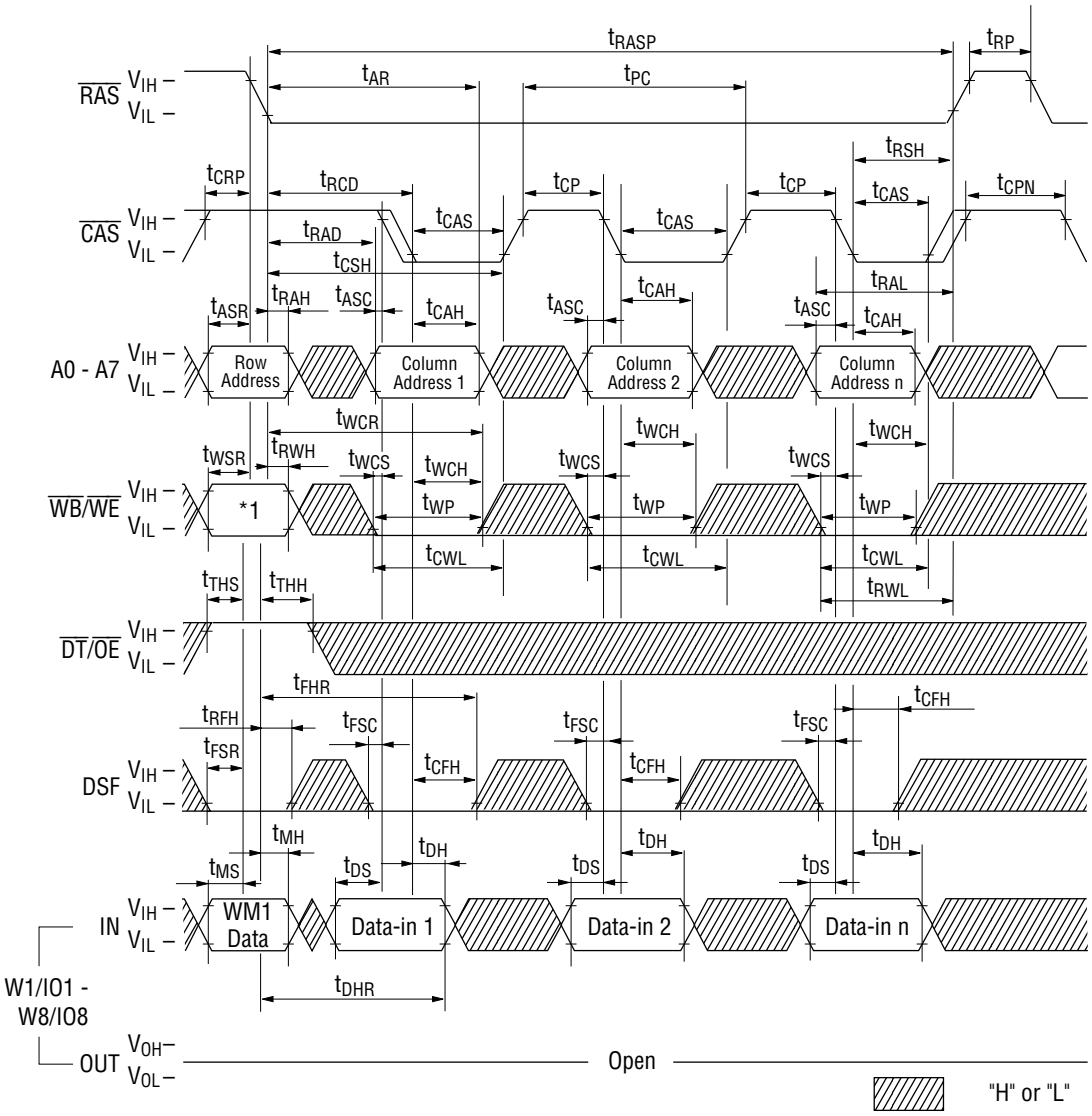

*1 $\overline{WB}/\overline{WE}$	W1/IO1 - W8/IO8	Cycle
0	WM1 data	Write per Bit
1	Don't Care	Normal Write

WM1 data: 0: Write Disable
1: Write Enable

www.DataSheet4U.com

www.DataSheet4U.com

Fast Page Mode Read Modify Write Cycle

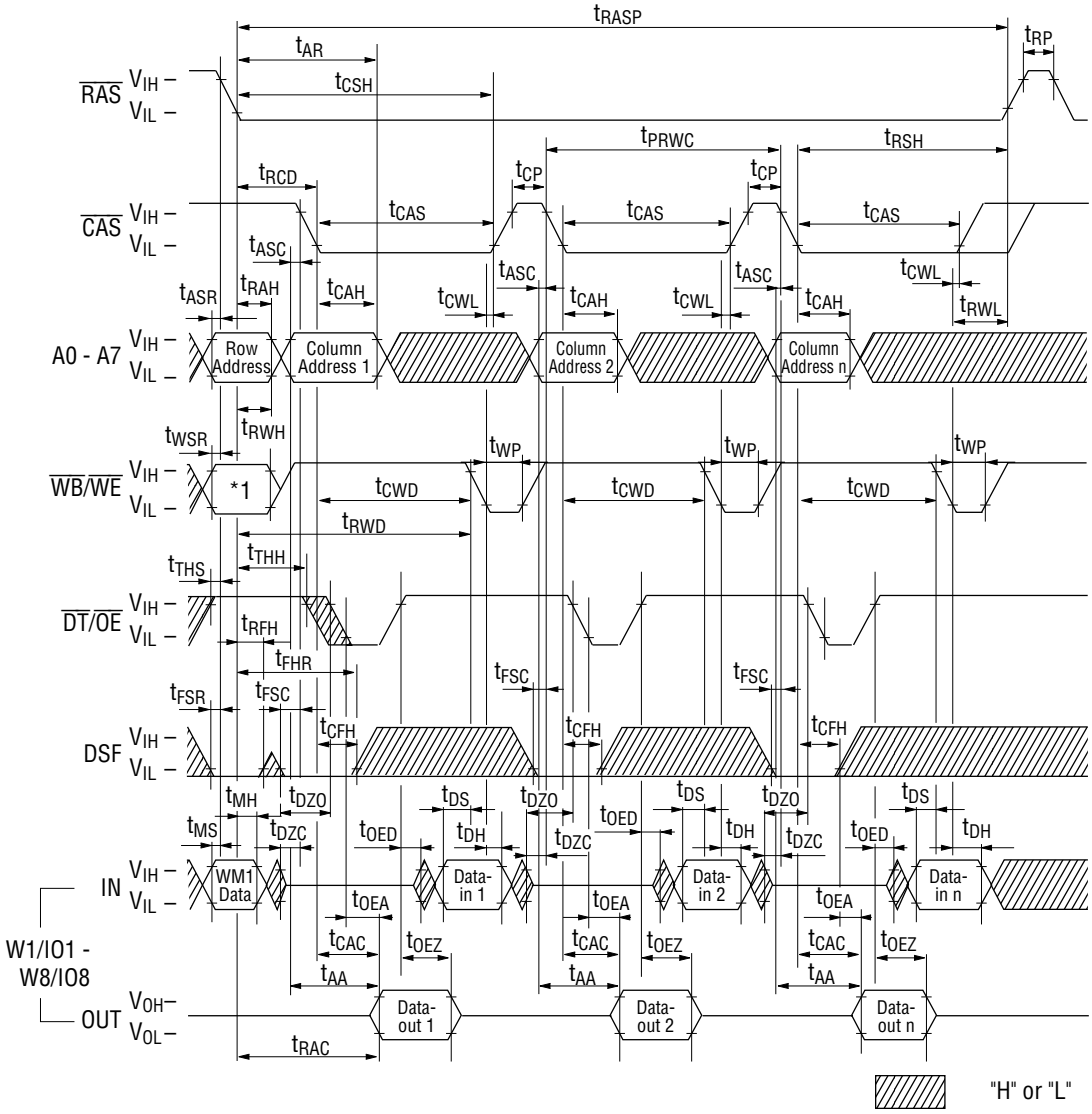

*1 $\overline{WB}/\overline{WE}$	W1/IO1 - W8/IO8	Cycle
0	WM1 data	Write per Bit
1	Don't Care	Normal Write

WM1 data: 0: Write Disable
1: Write Enable

www.DataSheet4U.com

www.DataSheet4U.com

$\overline{RAS}$ Only Refresh Cycle

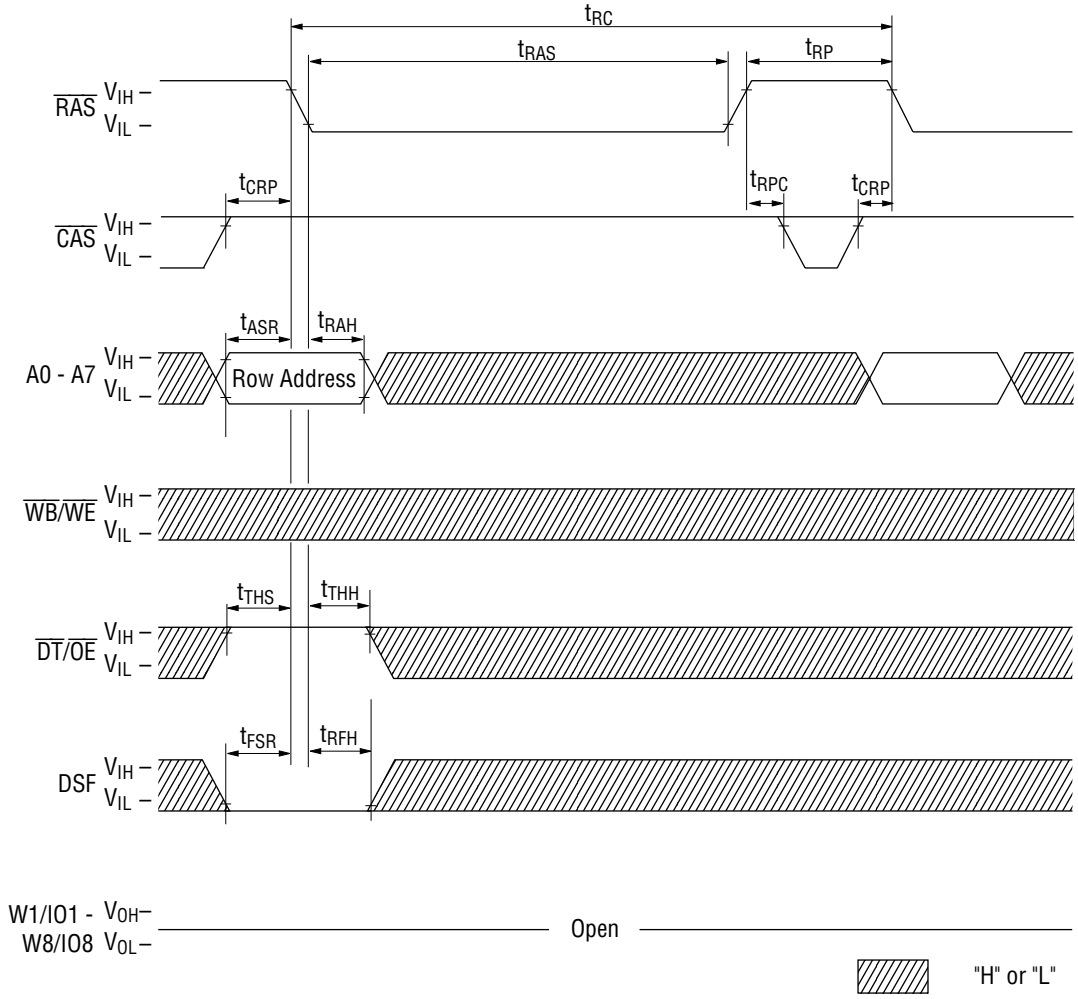

www.DataSheet4U.com

www.DataSheet4U.com

$\overline{CAS}$ before $\overline{RAS}$ Refresh Cycle

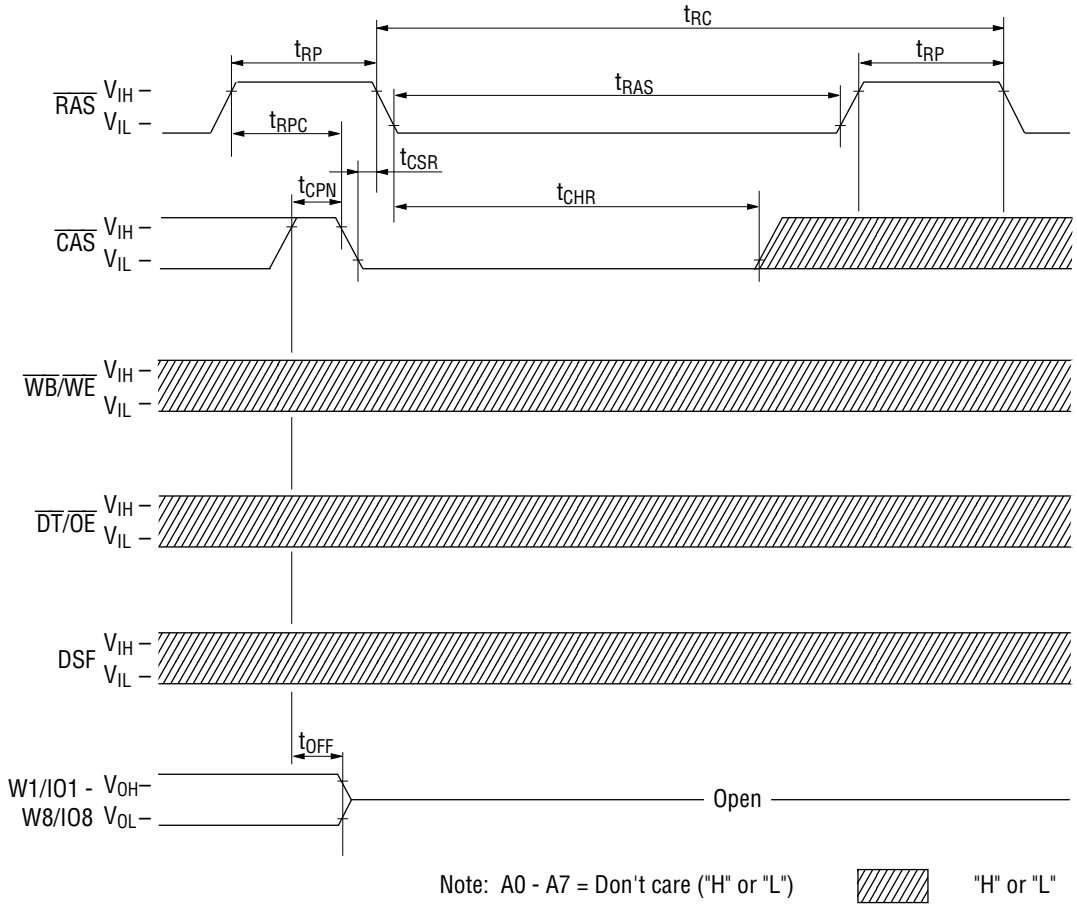

www.DataSheet4U.com

www.DataSheet4U.com

Hidden Refresh Cycle

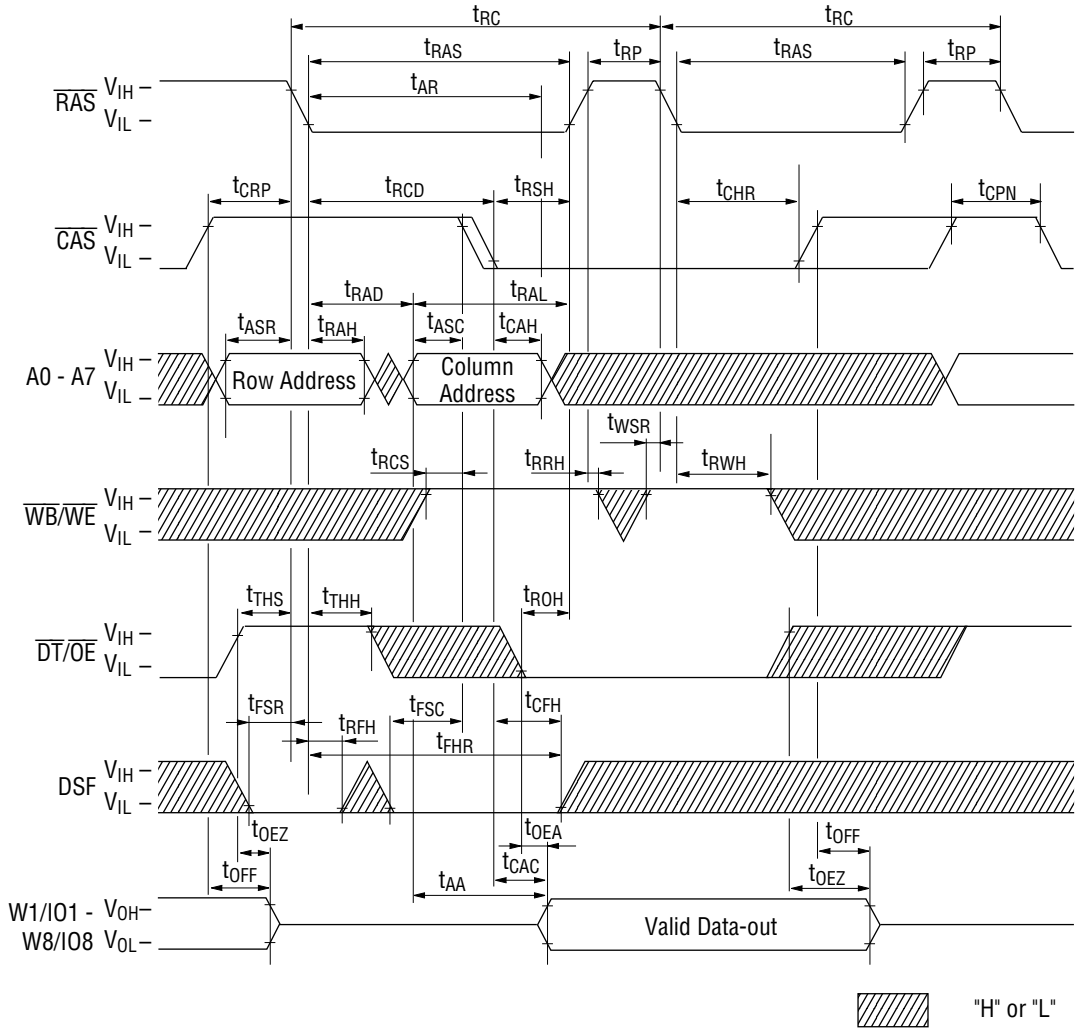

www.DataSheet4U.com

www.DataSheet4U.com

Load Color Register Cycle

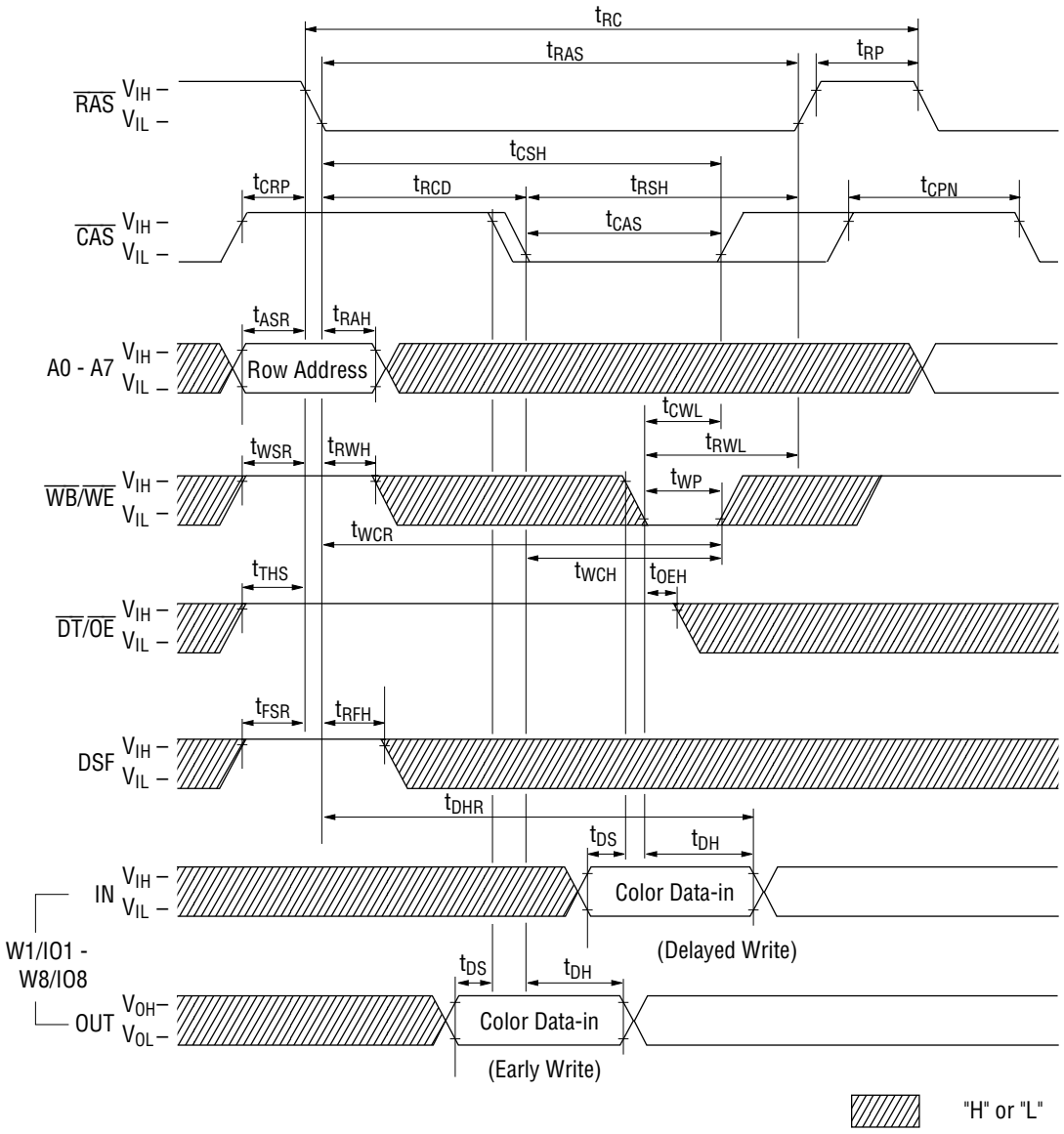

www.DataSheet4U.com

www.DataSheet4U.com

Read Color Register Cycle

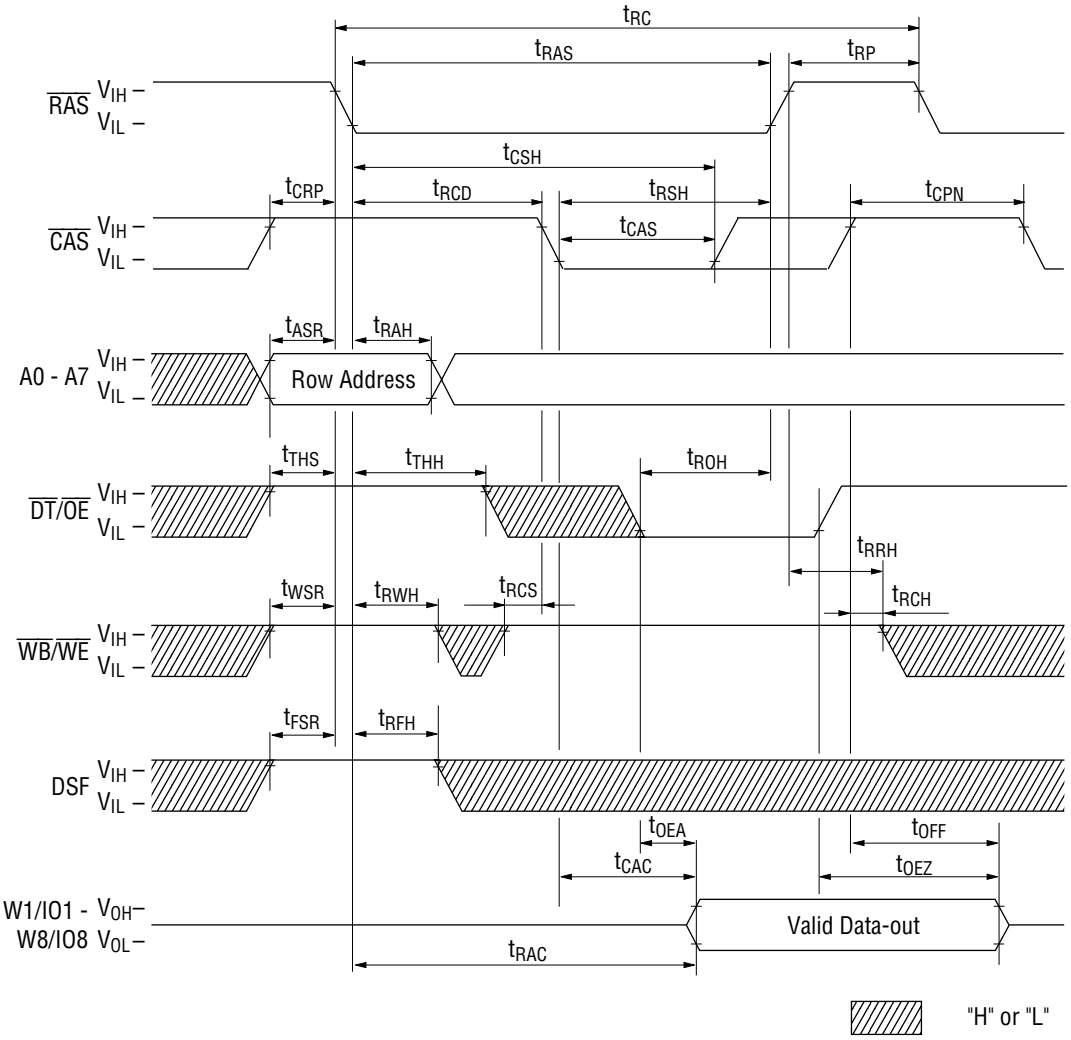

www.DataSheet4U.com

www.DataSheet4U.com

Flash Write Cycle

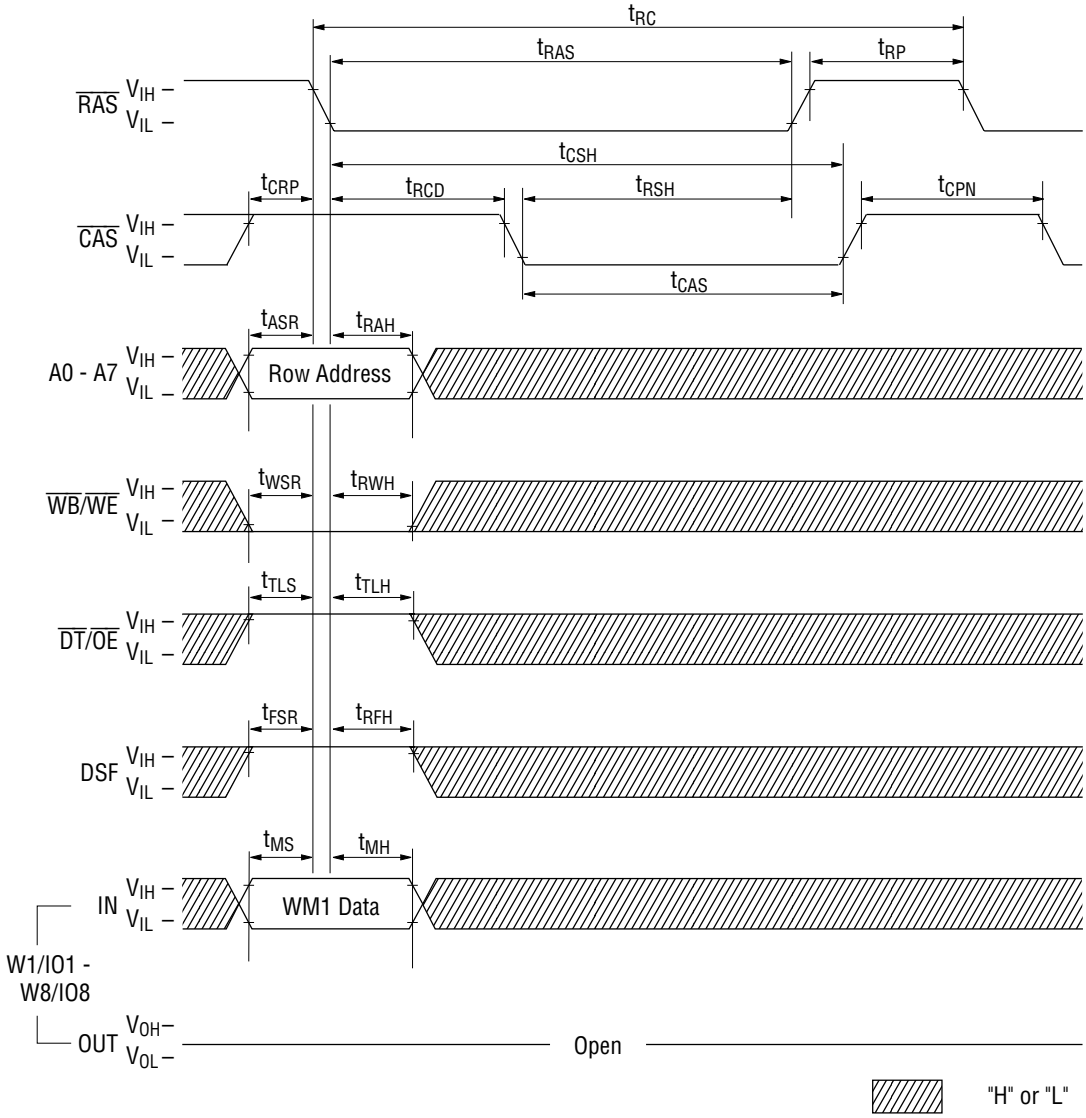

WM1 Data	Cycle
0	Flash Write Disable
1	Flash Write Enable

www.DataSheet4U.com

www.DataSheet4U.com

Block Write Cycle

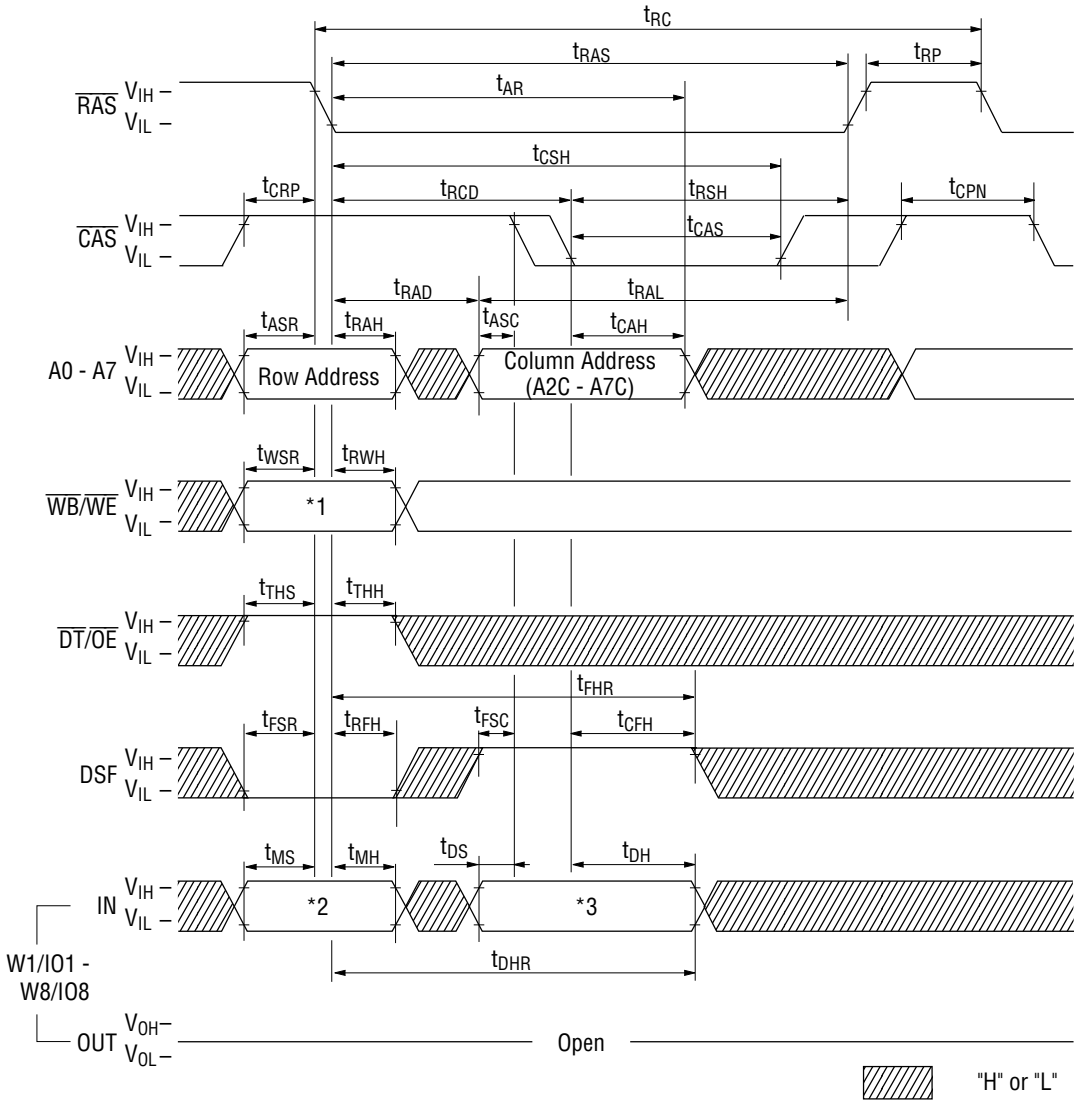

*1 $\overline{WB}/\overline{WE}$	*2 W1/IO1 - W8/IO8	Cycle
0	WM1 data	Masked Block Write
1	Don't Care	Block Write (Non Mask)

WM1 data: 0: Write Disable
1: Write Enable

*3) COLUMN SELECT

W1/IO1 – Column 0 (A1C = 0, A0C = 0)
W2/IO2 – Column 1 (A1C = 0, A0C = 1)
W3/IO3 – Column 2 (A1C = 1, A0C = 0)
W4/IO4 – Column 3 (A1C = 1, A0C = 1)

} Wn/IOn
= 0 : Disable
= 1 : Enable

www.DataSheet4U.com

www.DataSheet4U.com

Fast Page Mode Block Write Cycle

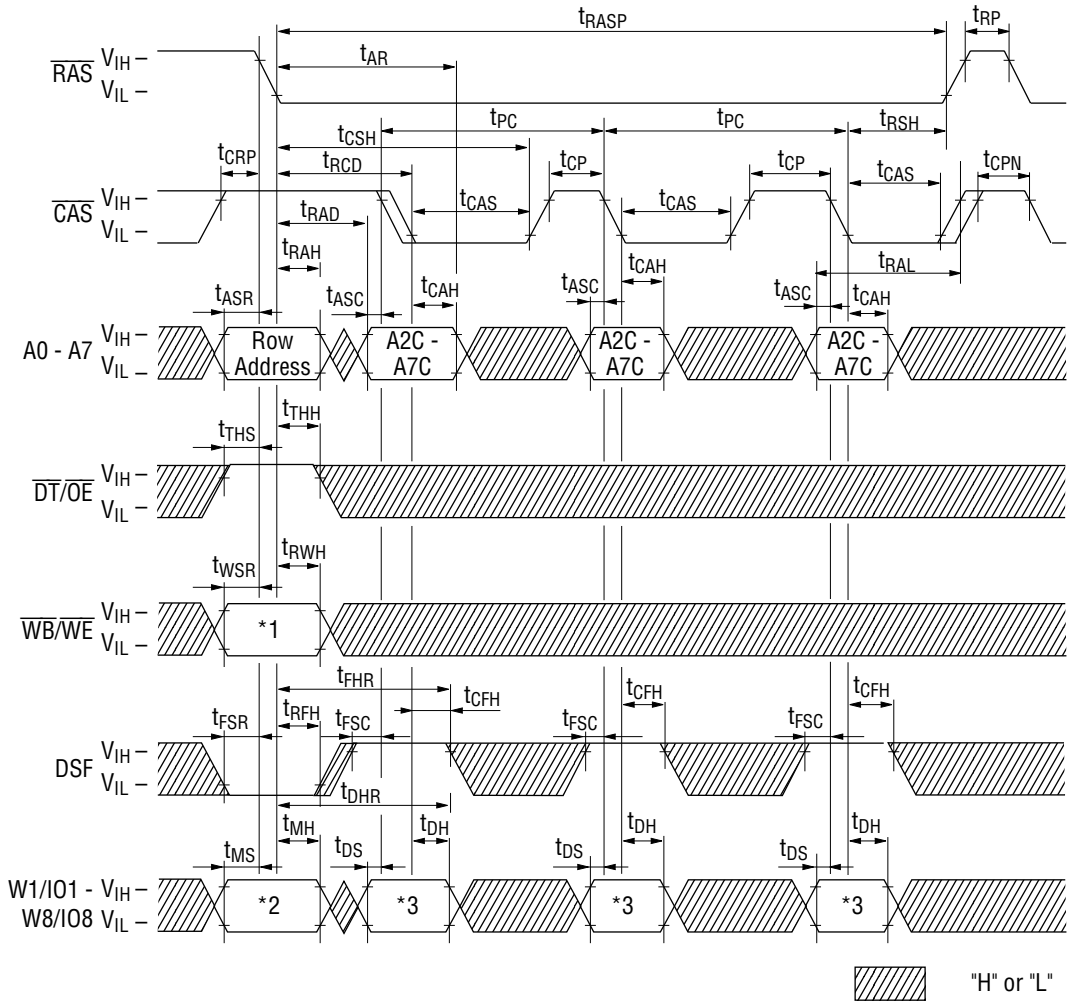

*1 $\overline{WB}/\overline{WE}$	*2 W1/IO1 - W8/IO8	Cycle
0	WM1 data	Masked Block Write
1	Don't Care	Block Write (Non Mask)

WM1 data: 0: Write Disable
1: Write Enable

*3) COLUMN SELECT

W1/IO1 – Column 0 (A1C = 0, A0C = 0)
W2/IO2 – Column 1 (A1C = 0, A0C = 1)
W3/IO3 – Column 2 (A1C = 1, A0C = 0)
W4/IO4 – Column 3 (A1C = 1, A0C = 1)

Wn/IOn
= 0 : Disable
= 1 : Enable

www.DataSheet4U.com

www.DataSheet4U.com

Read Transfer Cycle (Previous Transfer is Write Transfer Cycle)

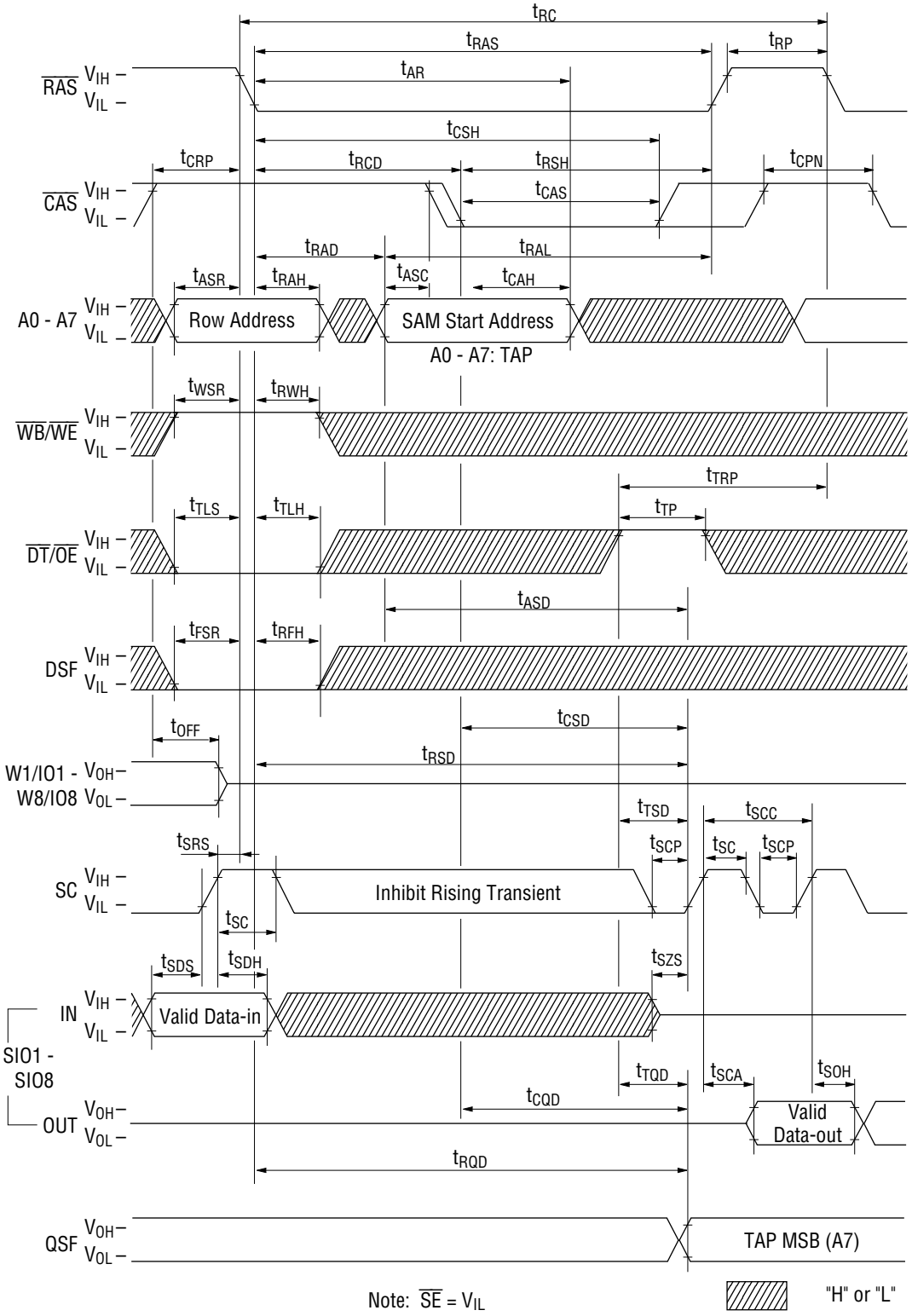

www.DataSheet4U.com

www.DataSheet4U.com

Real Time Read Transfer Cycle

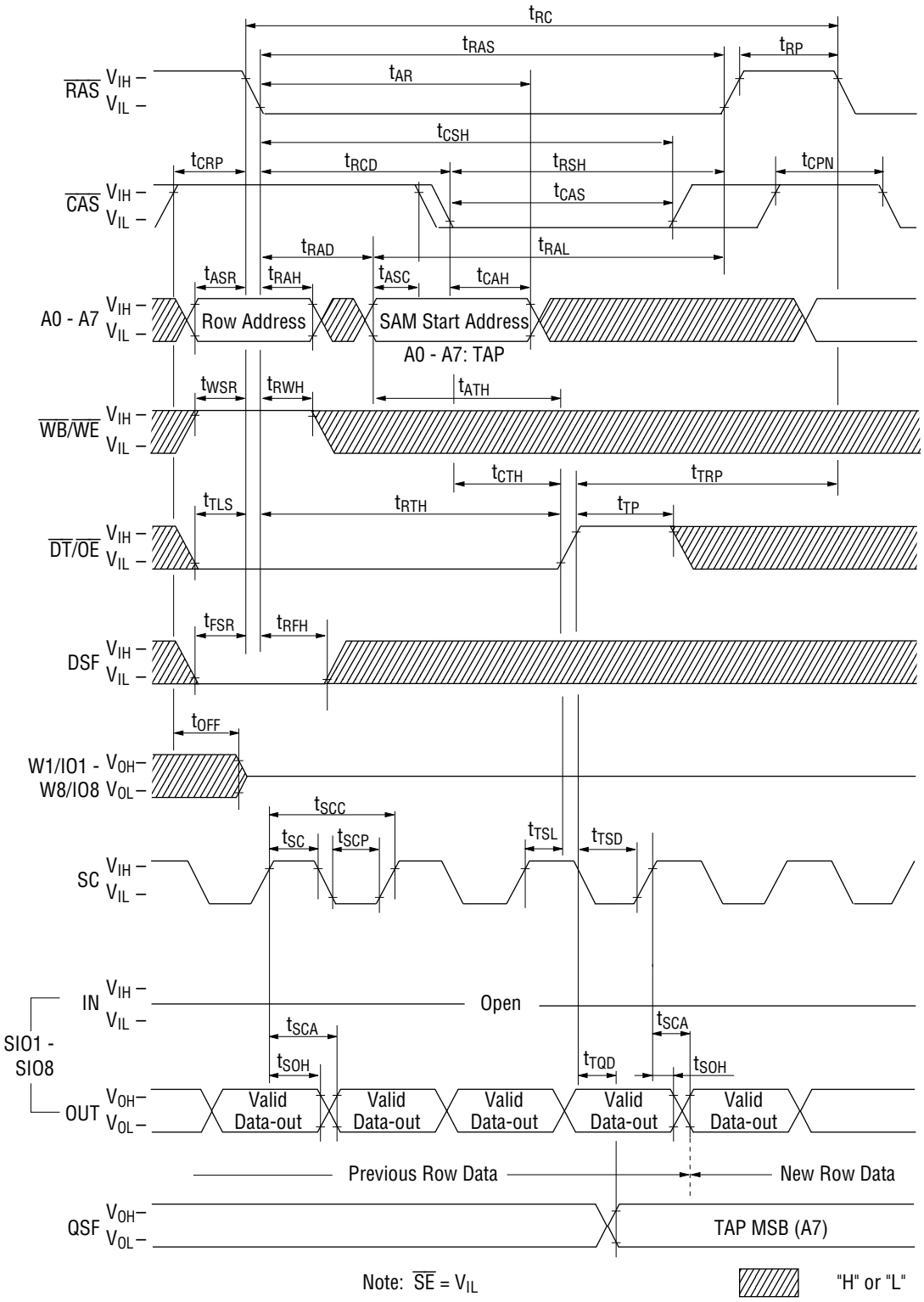

www.DataSheet4U.com

www.DataSheet4U.com

Split Read Transfer Cycle

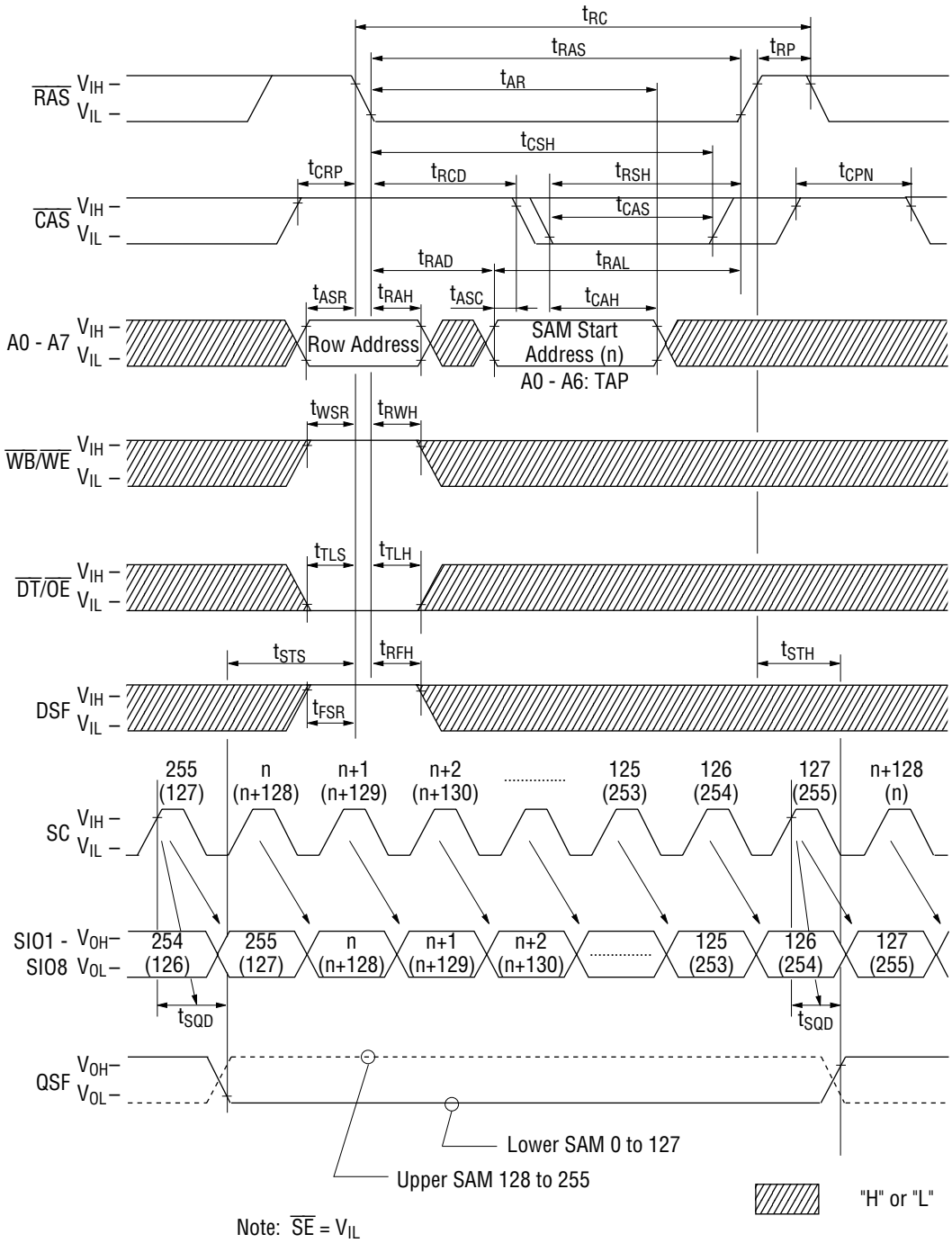

Note: $\overline{SE} = V_{IL}$

www.DataSheet4U.com

www.DataSheet4U.com

Pseudo Write Transfer Cycle

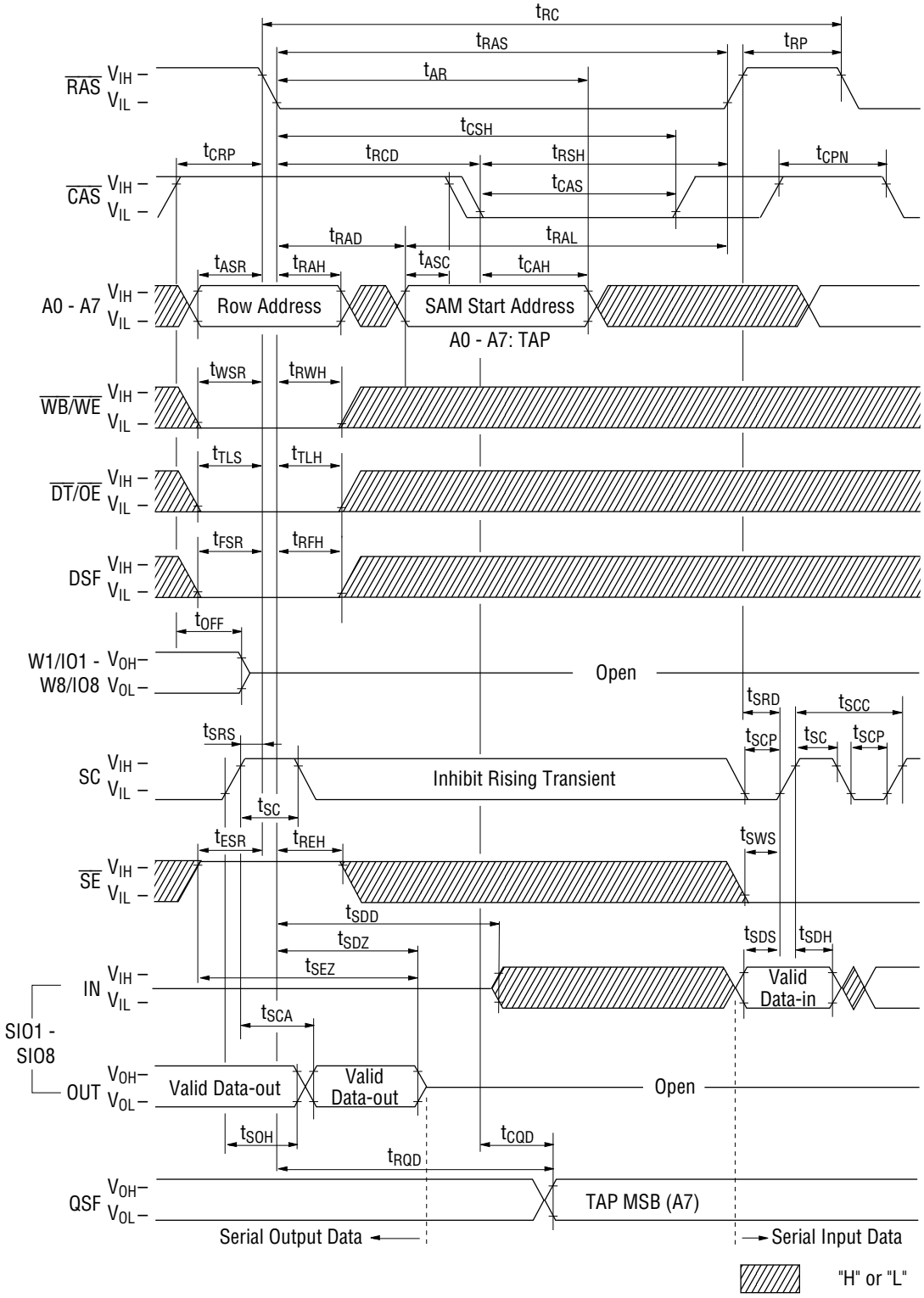

www.DataSheet4U.com

www.DataSheet4U.com

Write Transfer Cycle

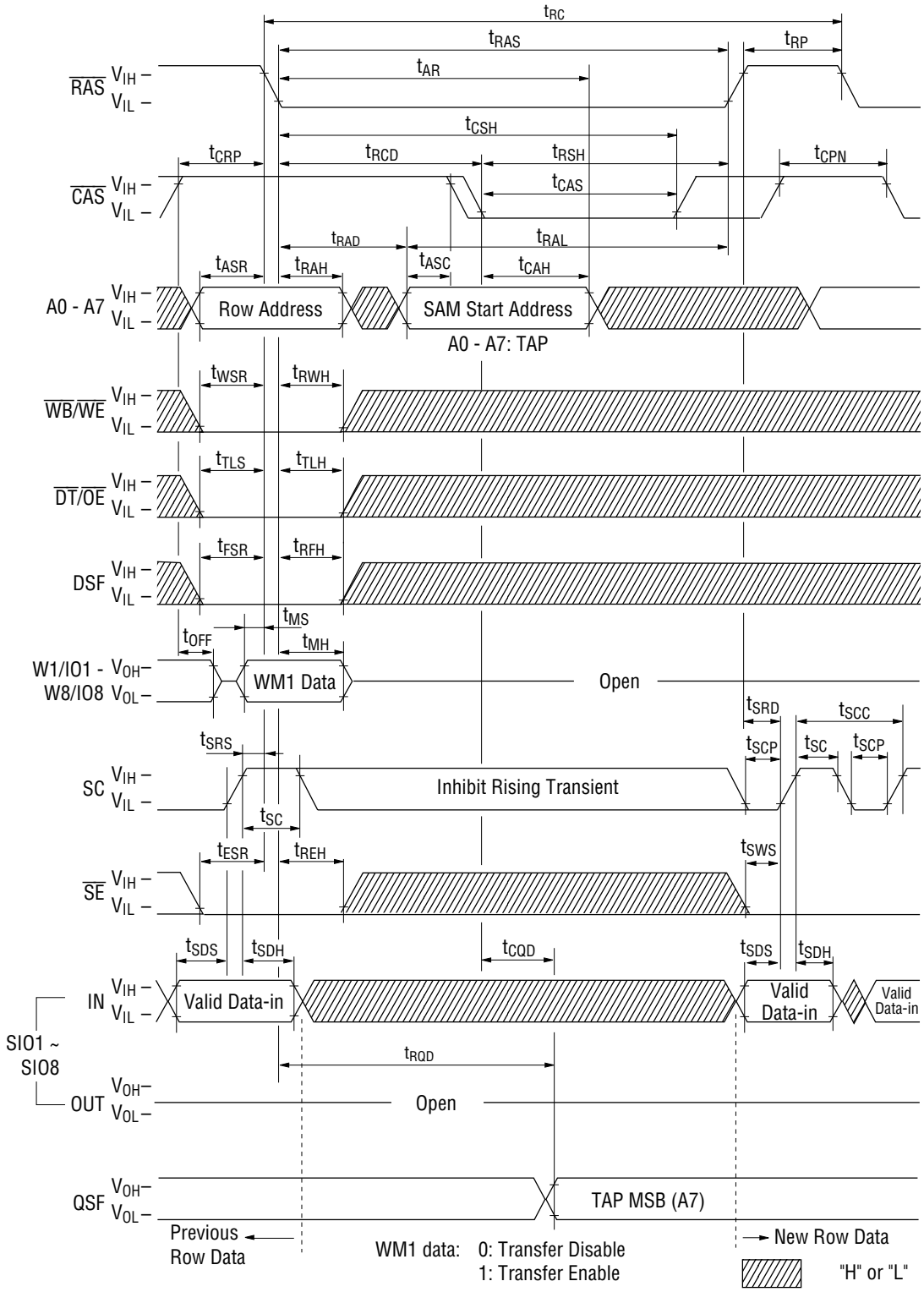

www.DataSheet4U.com

www.DataSheet4U.com

Split Write Transfer Cycle

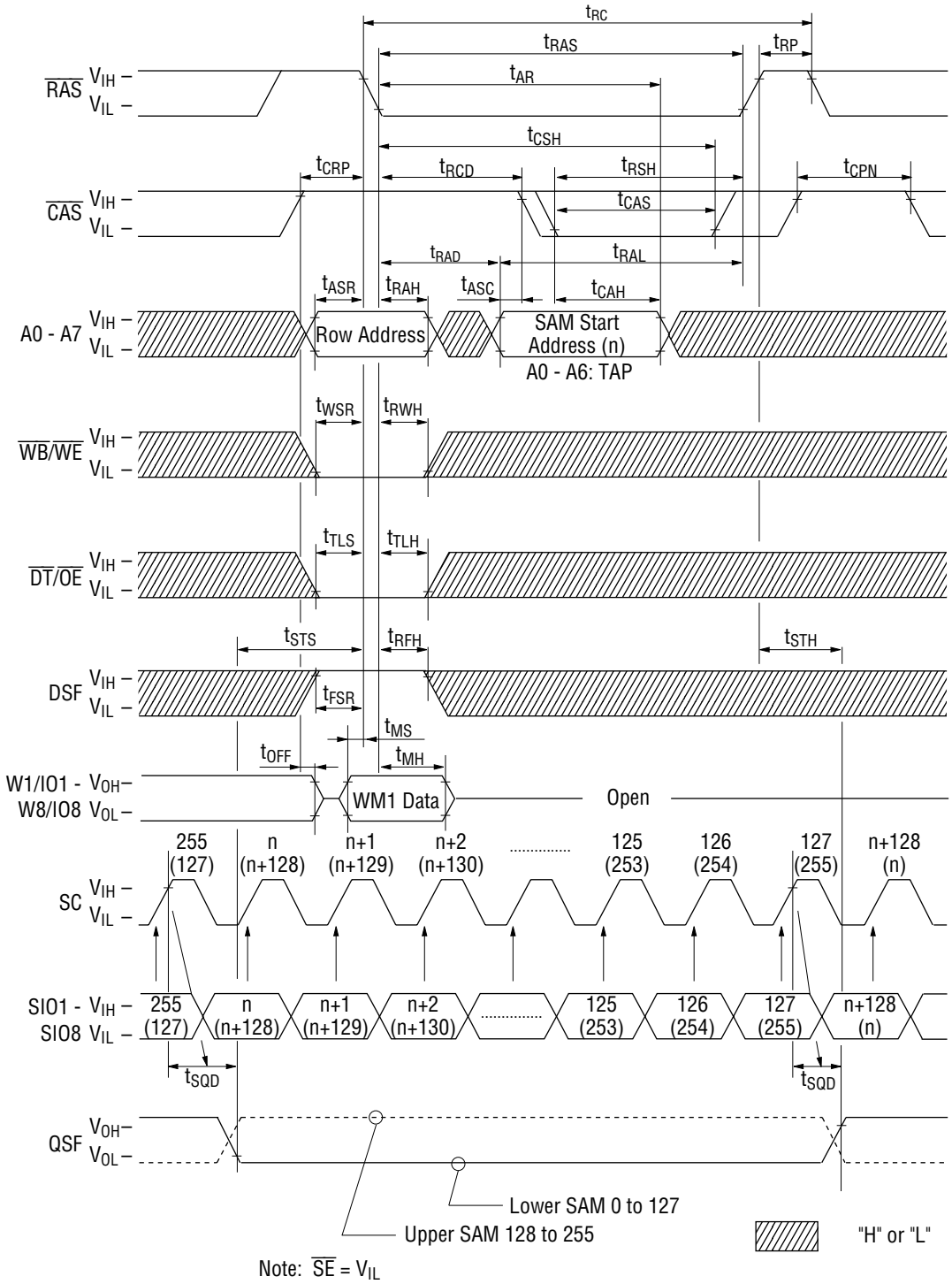

Note: $\overline{SE} = V_{IL}$

www.DataSheet4U.com

www.DataSheet4U.com

Serial Read Cycle ($\overline{SE}$ = V_{IL})

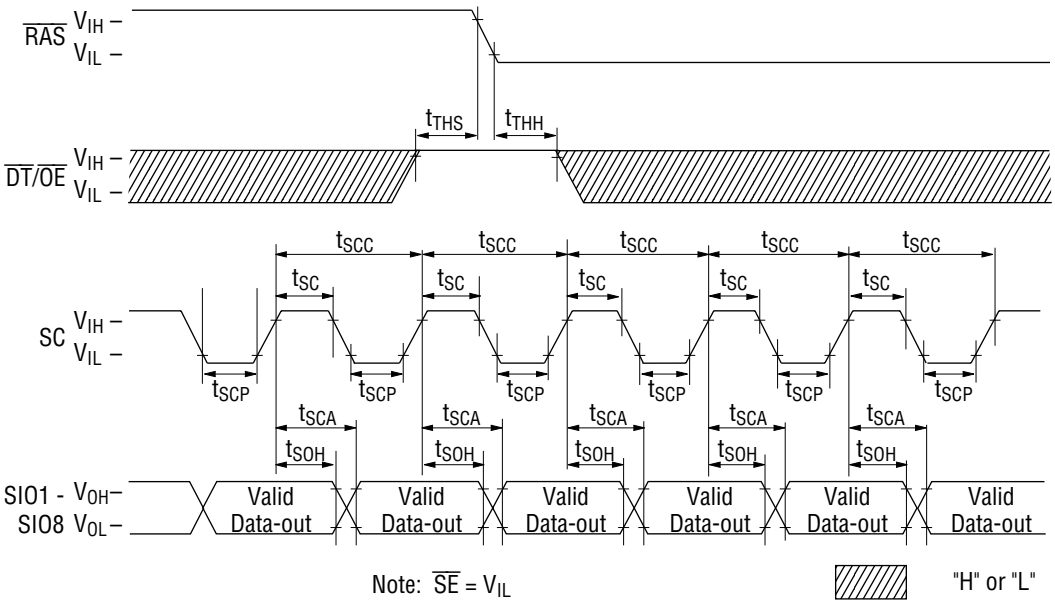

Serial Read Cycle ($\overline{SE}$ Controlled Outputs)

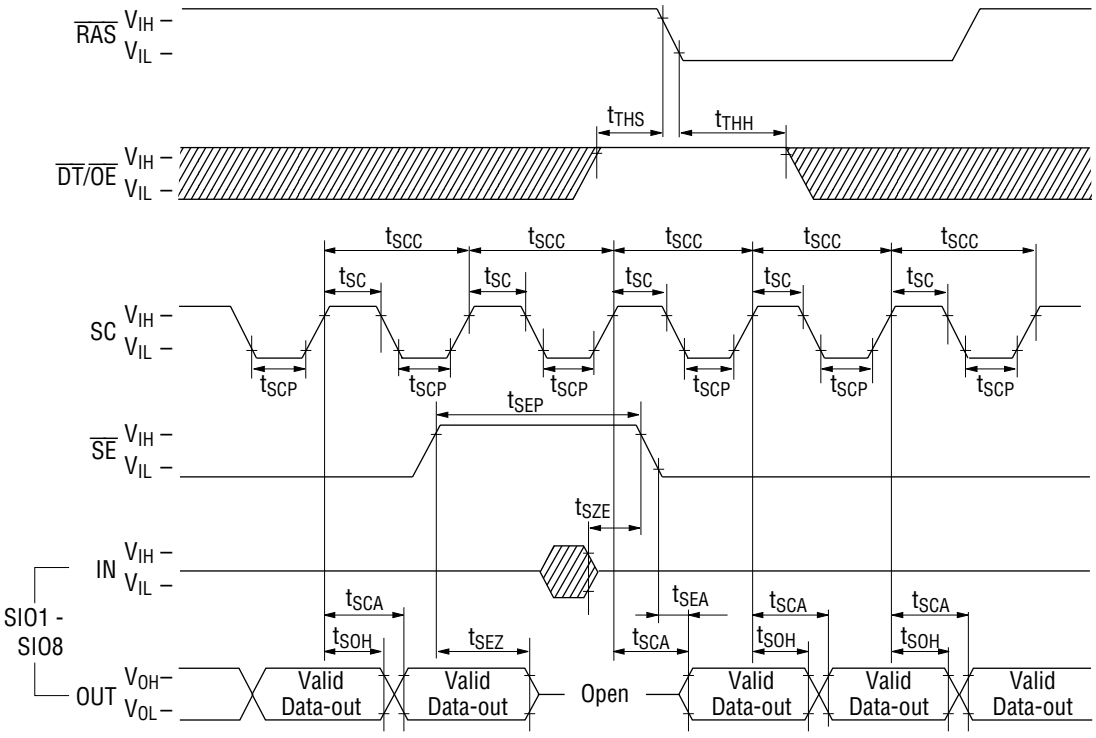

www.DataSheet4U.com

www.DataSheet4U.com

Serial Write Cycle ($\overline{SE}$ = V_{IL})

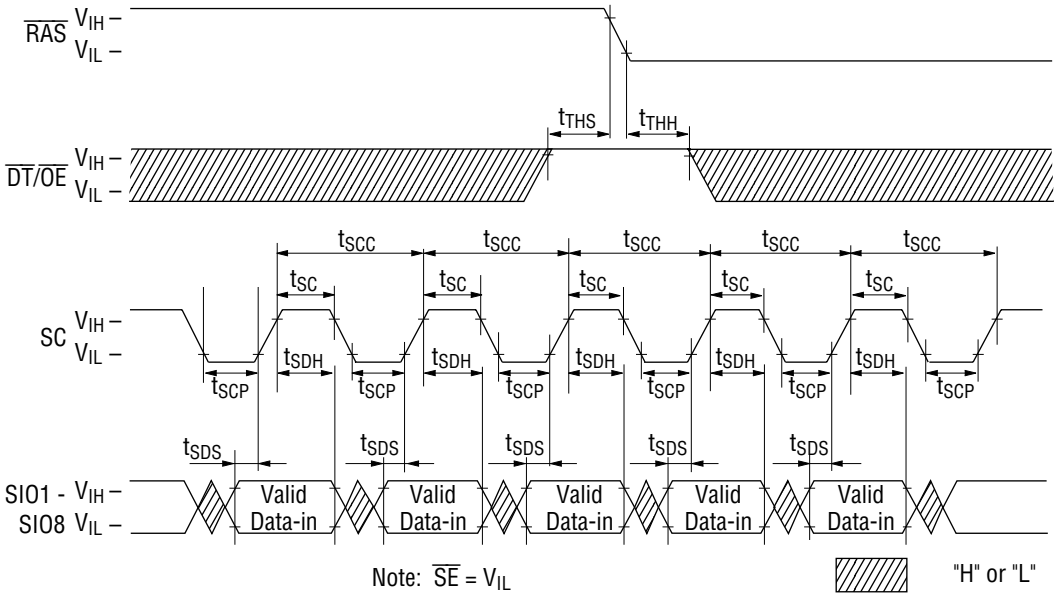

Serial Write Cycle ($\overline{SE}$ Controlled Inputs)

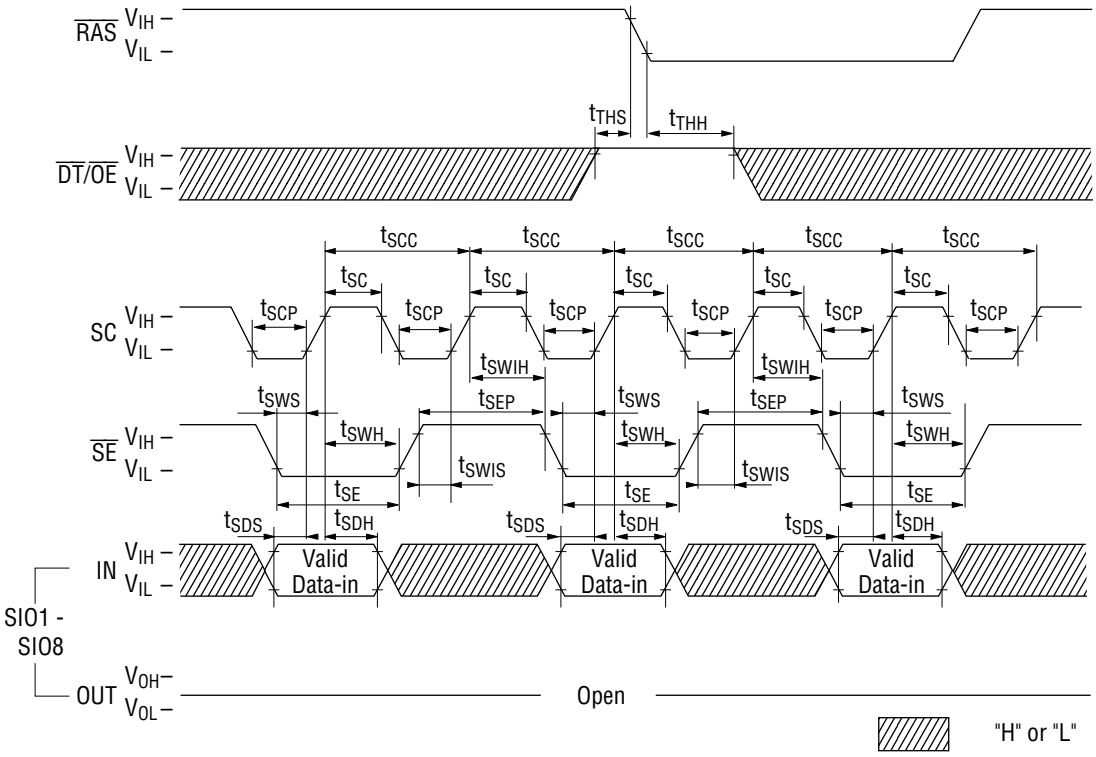

www.DataSheet4U.com

www.DataSheet4U.com

PIN FUNCTION

Address Input : A0 - A7

The 16 address bits decode an 8-bit location of the 525,288 locations in the MSM54C865-JS/ZS memory array. The address bits are multiplexed to 8 address input pins (A0 to A7) as standard DRAM. 8 row address bits are latched at the falling edge of $\overline{RAS}$. The following 8 column address bits are latched at the falling edge of $\overline{CAS}$.

Row Address Strobe : $\overline{RAS}$

$\overline{RAS}$ is a basic RAM control signal. The RAM port is in standby mode when the $\overline{RAS}$ level is "high". As the standard DRAM's $\overline{RAS}$ signal function, $\overline{RAS}$ is control input that latches the row address bits and random access cycle begins at the falling edge of $\overline{RAS}$.

In addition to the conventional $\overline{RAS}$ signal function, the level of the input signals, $\overline{CAS}$, $\overline{DT}$/$\overline{OE}$, $\overline{WB}$/$\overline{WE}$, DSF, and $\overline{SE}$, at the falling edge of $\overline{RAS}$, determines the MSM54C865-JS/ZS operation modes.

Column Address Strobe : $\overline{CAS}$

As the standard DRAM's $\overline{CAS}$ signal function, $\overline{CAS}$ is the control signal that latches the column address input and the states of the special function input DSF to select, in conjunction with the $\overline{RAS}$ control, either read/write operations or the special block write feature on the RAM port when the DSF is held "low" at the falling edge of $\overline{RAS}$. $\overline{CAS}$ also acts as a RAM port output enable signal.

Data Transfer/Out Enable : $\overline{DT}$/$\overline{OE}$

$\overline{DT}$/$\overline{OE}$ is also a control input signal having multiple functions. As the standard DRAM's $\overline{OE}$ signal function, $\overline{DT}$/$\overline{OE}$ is used as an output enable control when $\overline{DT}$/$\overline{OE}$ is "high" at the falling edge of $\overline{RAS}$.

In addition to the conventional $\overline{OE}$ signal function, a data transfer operation is started between the RAM port and the SAM port when $\overline{DT}$/$\overline{OE}$ is "low" at the falling edge of $\overline{RAS}$.

Write per Bit/ Write Enable : $\overline{WB}$/$\overline{WE}$

$\overline{WB}$/$\overline{WE}$ is also a control input signal having multiple functions. As the standard DRAM's $\overline{WE}$ signal function, it is used to write data into the memory on the RAM port when $\overline{WB}$/$\overline{WE}$ is "high" at the falling edge of $\overline{RAS}$.

In addition to the conventional $\overline{WE}$ signal function, the $\overline{WB}$/$\overline{WE}$ determines the write-per-bit function when $\overline{WB}$/$\overline{WE}$ is "low" at the falling edge of $\overline{RAS}$, during RAM port operations. The $\overline{WB}$/$\overline{WE}$ is "high" at the falling edge of $\overline{RAS}$, the data is transferred from RAM to SAM (read transfer). When $\overline{WB}$/$\overline{WE}$ is "low" at the falling edge of $\overline{RAS}$, the data is transferred SAM to RAM (write transfer).

www.DataSheet4U.com

www.DataSheet4U.com

Write Mask Data/Data Input and Output : W1/IO1 - W8/IO8

W1/IO1 - W8/IO8 have the functions of both Input/Output and a control input signal. As the standard DRAM's I/O pins, input data on the W1/IO1 - W8/IO8 are written into the RAM port during the write cycle. The input data is latched at the falling edge of either $\overline{CAS}$ or $\overline{WB}/\overline{WE}$, whichever occurs later. The RAM data out buffers, which will output read data from $\overline{RAS}$, $\overline{CAS}$, $\overline{DT}/\overline{OE}$ and column address are satisfied and the output data will remain valid as long as $\overline{CAS}$ and $\overline{DT}/\overline{OE}$ are kept "low". The outputs will return to the high impedance state at the rising edge of either $\overline{CAS}$ or $\overline{DT}/\overline{OE}$, whichever occurs earlier. In addition to the conventional I/O function, the W1/IO1 - W8/IO8 have the function to set the mask data, which select mask input pins out of eight input pins, W1/IO1 - W8/IO8, at the falling edge of $\overline{RAS}$. Data is written to the DRAM on data lines where the write-mask data is a logic "1". The write-mask data is valid for only one cycle.

Serial Clock : SC

SC is a main serial cycle control input signal. All operation of SAM port are synchronized with the serial clock SC. Data is shifted in or out of the SAM registers at the rising edge of SC. In a serial read , the output data becomes valid on the SIO pins after the maximum specified serial access time t_{SCA} from the rising edge of SC.

The SC also increments the 8 bits serial pointer which is used to select the SAM address. The pointer address is incremented in a wrap-around mode to select sequential locations after the setting location which is determined by the column address in the read transfer cycle. When the pointer reaches the most significant address location (decimal 255), the next SC clock will place it at the least significant address location (decimal 0).

The SC must be held data constant V_{IH} or V_{IL} level during read/pseudo write/write-transfer operations and should not be clocked while the SAM port is in the standby mode to prevent the SAM pointer from being incremented.

Serial Enable : $\overline{SE}$

The $\overline{SE}$ is a serial access enable control and serial read/write control signal. In a serial read cycle, $\overline{SE}$ is used as an output control. In a serial write cycle, $\overline{SE}$ is used as a write enable control. When $\overline{SE}$ is "high", serial access is disable, however, the serial address pointer location is still incremented when SC is clocked even when $\overline{SE}$ is "high".

Special Function Input : DSF

The DSF is latched at the falling edge of $\overline{RAS}$ and $\overline{CAS}$ and allows for the selection of several RAM port and transfer operating modes. In addition to the conventional multiport DRAM, the special function consisting of flash write, block write, load/read color register and split read/write transfer can be invoked.

Special Function Output : QSF

QSF is an output signal which, during split register mode, indicates which half of the split SAM is being accessed. QSF "low" indicates that the lower split SAM (0-127) is being accessed. QSF 'high" indicates that the upper SAM (128-255) is being accessed.

QSF is monitored so that after it toggles and after allowing for a delay of t_{STS}, split read/write transfer operation can be performed on the non-active SAM.

www.DataSheet4U.com

www.DataSheet4U.com

Serial Input/Output : SIO1 - SIO8

Serial input/output mode is determined by the most recent read, write or pseudo write transfer cycle. When a read transfer cycle is performed, the SAM port is in the output mode. When a write or pseudo write transfer cycle is performed, the SAM port is switched from output mode to input mode.

www.DataSheet4U.com

www.DataSheet4U.com

OPERATION MODES

Table-1 shows the function truth table for a listing of all available RAM ports and transfer operation of MSM54C865.

The RAM port and data transfer operations are determined by the state of $\overline{CAS}$, $\overline{DT}$/$\overline{OE}$, $\overline{WB}$/$\overline{WE}$, $\overline{SE}$ and DSF at the falling edge of $\overline{RAS}$ and by the level of DSF at the falling edge of $\overline{CAS}$.

Table-1. Function Truth Table

$\overline{RAS}$↓					$\overline{CAS}$↓	ADDRESS		W/IO			Write Mask	Register		Function
$\overline{CAS}$	$\overline{DT}$/$\overline{OE}$	$\overline{WB}$/$\overline{WE}$	DSF	$\overline{SE}$	DSF	$\overline{RAS}$↓	$\overline{CAS}$↓	$\overline{RAS}$↓	$\overline{CAS}$↓	$\overline{CAS}$/$\overline{WE}$↓		WM	Color	
0	*	*	*	*	—	*	—	*	—	—	—	—	—	C.B.R Refresh
1	0	0	0	0	*	Row	TAP	WM1	*	*	WM1	Load Use	—	Masked Write Transfer
1	0	0	0	1	*	Row	TAP	*	*	*	—	—	—	Pseudo Write Transfer
1	0	0	1	*	*	Row	TAP	WM1	—	*	WM1	Load Use	—	Split Write Transfer
1	0	1	0	*	*	Row	TAP	*	*	*	—	—	—	Read Transfer
1	0	1	1	*	*	Row	TAP	*	*	*	—	—	—	Split Read Transfer
1	1	0	0	*	0	Row	Column	WM1	—	Din	WM1	Load Use	—	Write per Bit
1	1	0	0	*	1	Row	Column A2c-7c	WM1	Column Select	—	WM1	Load Use	Use	Masked Block Write
1	1	0	1	*	*	Row	*	WM1	—	*	WM1	Load Use	Use	Masked Flash Write
1	1	1	0	*	0	Row	Column	*	—	Din	—	—	—	Read Write
1	1	1	0	*	1	Row	Column A2c-7c	*	Column Select	—	—	—	Use	Block Write
1	1	1	1	*	*	Row	*	*	—	Color	—	—	Load	Load Color Register

If the DSF is 'high" at the falling edge of $\overline{RAS}$, special functions such as split transfer, flash write, and load/read color register can be invoked. If the DSF is "low" at the falling edge of $\overline{RAS}$ and "high" at the falling edge of $\overline{CAS}$, the block write feature can be invoked.

If the DSF is "low" at the falling edge of $\overline{RAS}$ and $\overline{CAS}$, only the conventional multiport DRAM operating feature can be invoked.

www.DataSheet4U.com

www.DataSheet4U.com

RAM PORT OPERATION

Fast Page Mode

Fast page mode allows data to be transferred into or out of multiple column locations of the same row by performing multiple $\overline{CAS}$ cycle during a single activity for a period up to 100µ seconds. For the initial fast page mode access, the output data is valid after the specified access times from $\overline{RAS}$, $\overline{CAS}$, column address and $\overline{DT}/\overline{OE}$.

For all subsequent fast page mode read operations, the output data is valid after the specified access times from $\overline{CAS}$, column address and $\overline{DT}/\overline{OE}$. When the write-per-bit function is enabled, the mask data latched at the falling edge of $\overline{RAS}$ is maintained throughout the fast page mode write or read or read modify write cycle.

$\overline{RAS}$-Only Refresh

The data in the DRAM requires periodic refreshing to prevent data loss. Refreshing is accomplished by performing a memory cycle at each of the 256 rows in the DRAM array within the specified 4 ms refresh period.

Although any normal memory cycle will perform the refresh operation, this function is most easily accomplished with "$\overline{RAS}$-Only" cycle.

Block Write

Block write allows for the data in the color register to be written into 4 consecutive column address locations starting from a selectively controlled on an I/O basis and column mask capability is also available.

Block write cycle is performed by holding $\overline{CAS}$, $\overline{DT}/\overline{OE}$ "high" and DSF "low" at the falling edge of $\overline{RAS}$ and by holding DSF "high" at the falling edge of $\overline{CAS}$. The state of the $\overline{WB}/\overline{WE}$ input at the falling edge of $\overline{RAS}$ determines whether or not the I/O data mask is enabled ($\overline{WB}/\overline{WE}$ must be "low" to enable the I/O mask or "high" to disable mask). At the falling edge of $\overline{RAS}$, a valid row address and I/O mask data are also specified. At the falling edge of $\overline{CAS}$, the starting column address location and column mask data must be provided. During a block write cycle, the 2 least significant column address locations (A0C, A1C) are internally controlled and only the 6 most significant column addresses (A2C - A7C) are latched at the falling edge of $\overline{CAS}$.

www.DataSheet4U.com

www.DataSheet4U.com

SAM PORT OPERATION

Single Register Mode

High speed serial read or write operation can be performed through the SAM port independent of the RAM port operation, except during read/write transfer cycles.

The preceding transfer operation determines the direction of data flow through the SAM port. If the preceding transfer is a read transfer, the SAM port is in the output made. If the preceding transfer is write or pseudo write transfer, the SAM port is in the input mode.

The pseudo write transfer only switches the SAM port from output mode to input mode (Data is not transffered from SAM port to RAM port).

Serial data can be read out of the SAM after a read transfer has been performed. The data is shifted out of the SAM starting at any of the 256 bits locations.

The TAP location corresponds to the column address selected at the falling edge of $\overline{CAS}$ during the read or write transfer cycle. The SAM register is configured as a circular data register. The data is shifted out sequentially starting from the selected TAP location to the most significant bit (255) and then wraps around the least significant bit (0).

Split Register Mode

In split register mode, data can be shifted into or out of one half of the SAM while a split read or split write transfer is being performed on the other half of the SAM.

Conventional (non split) read, write, or pseudo write transfer cycle must precede any split read or split write transfers. The split read and write transfers will not change the SAM port mode set by preceding conventional transfer operation. In the split register mode, serial data can be shifted in or out of one of the split SAM registers starting from any at the 128 TAP locations, excluding the last address of each split SAM. Data is shifted in or out sequentially starting from the selected TAP location to the most significant bit (127 or 255) of the first split SAM. Then the SAM pointer moves to the TAP location selected for the second split SAM to shift data in or out sequentially starting from this TAP location to the most significant bit (255 or 127) and finally wraps around to the least significant bit.

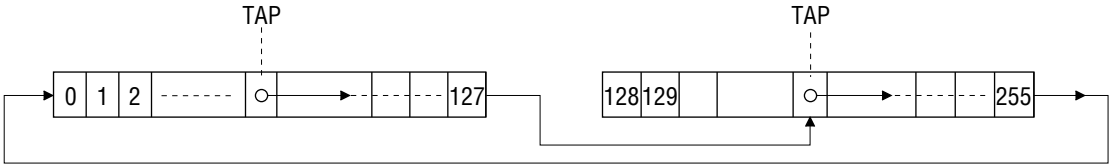

www.DataSheet4U.com

www.DataSheet4U.com

DATA TRANSFER OPERATION

The MSM54C865 features two types of bidirectional data transfer capability between RAM and SAM, as shown in Figure 1 below.

1) Conventional (non split) transfer : 256 words by 8 bits of data can be loaded from RAM to SAM (Read transfer) or from SAM to RAM (write transfer).
2) Split transfer : 128 words by 8 bits of data can be loaded from the lower/upper half of the RAM to the lower/upper half of the SAM (Split read transfer) or from the lower/upper half of SAM to the lower/upper half of RAM (Split write transfer).
   The conventional transfer and split transfer modes are controlled by the DSF input signal.

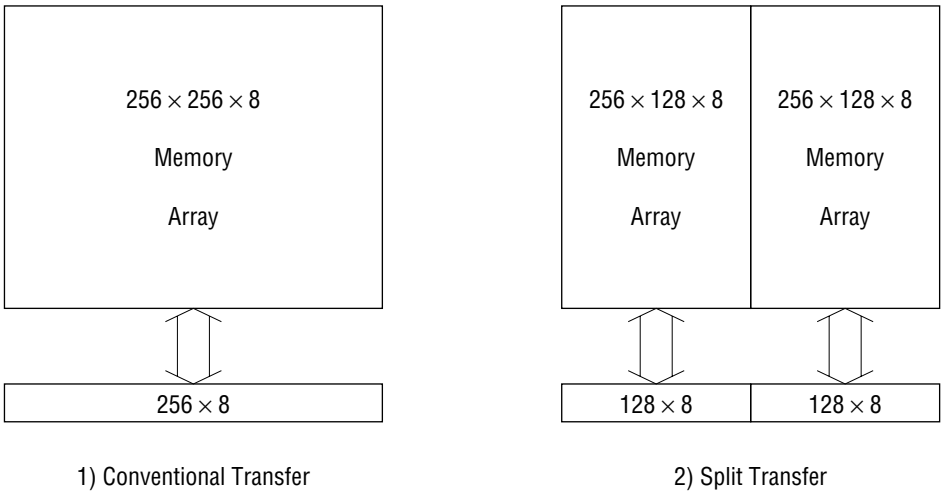

Figure 1.

The MSM54C865 supports five types of transfer operation : Read transfer, Split read transfer, Write transfer, Pseudo write transfer and Split write transfer as shown in truth table. Data transfer is invoked by holding the $\overline{DT}/\overline{OE}$ signal "low" at the falling edge of $\overline{RAS}$. The type of transfer operation is determined by the state of $\overline{CAS}$, $\overline{WB}/\overline{WE}$, $\overline{SE}$ and DSF latched at the falling edge of $\overline{RAS}$. During conventional transfer operations, the SAM port is switched from input to output mode (Read transfer) or output to input mode (Write/Pseudo write transfer) whereas it remains unchanged during split transfer operation (Split read transfer or Split write transfer).

www.DataSheet4U.com

www.DataSheet4U.com

Read Transfer Operation

Read transfer consists of loading a selected row of data from the RAM into the SAM register. A read transfer is invoked by holding $\overline{CAS}$ "high", $\overline{DT}/\overline{OE}$ "low", $\overline{WB}/\overline{WE}$ "high", and DSF "low" at the falling edge of $\overline{RAS}$. The low address selected at the falling edge of $\overline{RAS}$ determines the RAM row to be transferred into the SAM. The transfer cycle is completed at the rising edge of $\overline{DT}/\overline{OE}$. When the transfer is completed, the SAM port is set into the output mode. In a read/real time read transfer cycle, the transfer of a new row of data is completed at the rising edge of $\overline{DT}/\overline{OE}$ and this data becomes valid on the SIO lines after the specified access time t_{SCA} from the rising edge of the subsequent SC cycles. The start address of the serial pointer of the SAM is determined by the column address selected at the falling edge of $\overline{CAS}$. In a read transfer cycle (which is preceded by a write transfer cycle), SC clock must be held at a constant V_{IL} or V_{IH}, after the SC high time has been satisfied. A rising edge of the SC clock must not occur until after the specified delay t_{TSD} from the rising edge of $\overline{DT}/\overline{OE}$.

In a real time transfer cycle (which is preceded by another read transfer cycle), the previous row data appears on the SIO lines until the $\overline{DT}/\overline{OE}$ signal goes "high" and the serial access time t_{SCA} for the following serial clock is satisfied. This feature allows for the first bit of the new row of data to appear on the serial output as soon as the last bit of the previous row has been strobed without any timing loss. To make this continuous data flow possible, the rising edge of $\overline{DT}/\overline{OE}$ must be synchronized with $\overline{RAS}$, $\overline{CAS}$ and the subsequent rising edge of SC (t_{RTH}, t_{CTH}, and t_{TSL}/t_{TSD} must be satisfied).

Write Transfer Operation

Write transfer cycle consists of loading the content of the SAM register into a selected row of the RAM. If the SAM data to be transferred must first be loaded through the SAM, a pseudo write transfer operation must precede the write transfer cycles. A write transfer is invoked by holding $\overline{CAS}$ "high", $\overline{DT}/\overline{OE}$ "low", $\overline{WB}/\overline{WE}$ "low", $\overline{SE}$ "low" and DSF "low" at the falling edge of $\overline{RAS}$. This write transfer is selectively controlled per RAM I/O block by setting the mask data on the Wi/Oi lines at the falling edge of $\overline{RAS}$. The row address selected at the falling edge of $\overline{RAS}$ determines the RAM row address into which the data will be transferred. The column address selected at the falling edge of $\overline{CAS}$ determines the start address of the serial pointer of the SAM. After the write transfer is completed, the SIO lines are set in the input mode so that serial data synchronized with the SC clock can be loaded. When consecutive write transfer operations are performed, new data must not be written into the serial register until the $\overline{RAS}$ cycle of the preceding write transfer is completed. Consequently, the SC clock must be held at a constant V_{IL} or V_{IH} during the $\overline{RAS}$ cycle. A rising edge of the SC clock is only allowed after the specified delay t_{SRD} from the rising edge of $\overline{RAS}$, at which time a new row of data can be written in the serial register.

Pseudo Write Transfer Operation

Pseudo write transfer cycle must be performed before loading data into the serial register after a read transfer operation has been executed. The only purpose of a pseudo write transfer is to change SAM port mode from output mode to input mode (A data transfer from SAM to RAM does not occur). After the serial register is loaded with new data, a write transfer is invoked by holding $\overline{CAS}$ "high", $\overline{DT}/\overline{OE}$ "low", $\overline{WB}/\overline{WE}$ "low", $\overline{SE}$ "high" and DSF "low" at the falling edge of $\overline{RAS}$. The timing conditions are the same as the one for the write transfer cycle except for the state of $\overline{SE}$ at the falling edge of $\overline{RAS}$.

www.DataSheet4U.com

www.DataSheet4U.com

Split Data Transfer and QSF

The MSM54C865 features a bidirectional split data transfer capability between the RAM and SAM. During split data transfer operation, the serial register is split into two halves which can be controlled independently. Split read or split write transfer operation can be performed to or from one half of the serial register while serial data can be shifted into or out of the other half of the serial register. The most significant column address location (A7C) is controlled internally to determine which half of the serial register will be reloaded from the RAM. QSF is an output which indicates which half of the serial register is in an active state. QSF changes state when the last SC clock is applied to active split SAM.

Split Read Transfer Operation

Split read transfer consists of loading 128 words by 8 bits of data from a selected row of the split RAM into the corresponding non-active split SAM register. Serial data can be shifted out from of the other half of the split SAM register simultaneously. During split read transfer operation, the RAM port input clocks do not have to be synchronized with the serial clock SC, thus eliminating timing restrictions as in the case of real time read transfers. A split read transfer can be performed after a delay of t_{STS}, from the change of state of the QSF output, is satisfied.

Conventional (non-split) read transfer operation must be preceded by split read transfer cycles.

Split Write Transfer Operation

Split write transfer consists of loading 128 words by 8 bits of data from the non-active split SAM register into a selected row of the corresponding split RAM. Serial data can be shifted into the other half of the split SAM register simultaneously. During split write transfer operation, the RAM port input clocks do not have to be synchronized with the serial clock SC, thus allowing for real time transfer. A split write transfer can be performed after a delay of t_{STS}, from the change of state of the QSF output, is satisfied.

A pseudo write transfer operation must precede split write transfer. The purpose of the pseudo write transfer operation is to switch the SAM port from output mode to input mode and to set the initial TAP location prior to split write transfer operation.

Transfer Operation Without $\overline{CAS}$

During all transfer cycles, the $\overline{CAS}$ input clock must be cycled, so that the column addresses are latched at the falling edge of $\overline{CAS}$, to set the SAM TAP location.

TAP Location in Split Transfer

1) In a split transfer operation, column address A0C through A6C must be latched at the falling edge of $\overline{CAS}$ in order to set the TAP location in one of the split SAM registers. During a split transfer, column address A7C is controlled internally and therefore it is ignored internally at the falling edge of $\overline{CAS}$. During a split transfer, it is not permissible to set the last address location (A0C-A6C = 7F), in either the lower SAM or the upper SAM, as the TAP location.

www.DataSheet4U.com

www.DataSheet4U.com

POWER-UP

Power must be applied to the $\overline{RAS}$ and $\overline{DT}/\overline{OE}$ input signals to pull them "high" before or at the same time as the V_{CC} supply is turned on. After power-up, a pause of 200 µs minimum is required with $\overline{RAS}$ and $\overline{DT}/\overline{OE}$ held "high". After the pause, a minimum of 8 $\overline{RAS}$ and 8 SC dummy cycles must be performed to stabilize the internal circuitry, before valid read, write or transfer operations can begin. During the initialization period, the $\overline{DT}/\overline{OE}$ signal must be held "high". If the internal refresh counter is used, a minimum 8 $\overline{CAS}$ before $\overline{RAS}$ cycles are required instead of 8 $\overline{RAS}$ cycles.

www.DataSheet4U.com

www.DataSheet4U.com

PACKAGE DIMENSIONS

(Unit : mm)

ZIP40-P-475-1.27

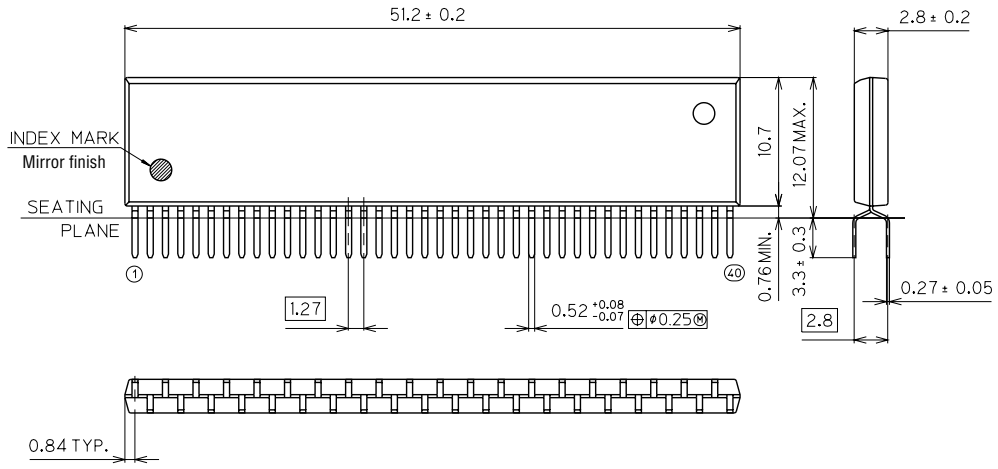

Package material	Epoxy resin
Lead frame material	42 alloy
Pin treatment	Solder plating
Solder plate thickness	5 μm or more
Package weight (g)	3.46 TYP.

www.DataSheet4U.com

www.DataSheet4U.com

(Unit : mm)

SOJ40-P-400-1.27

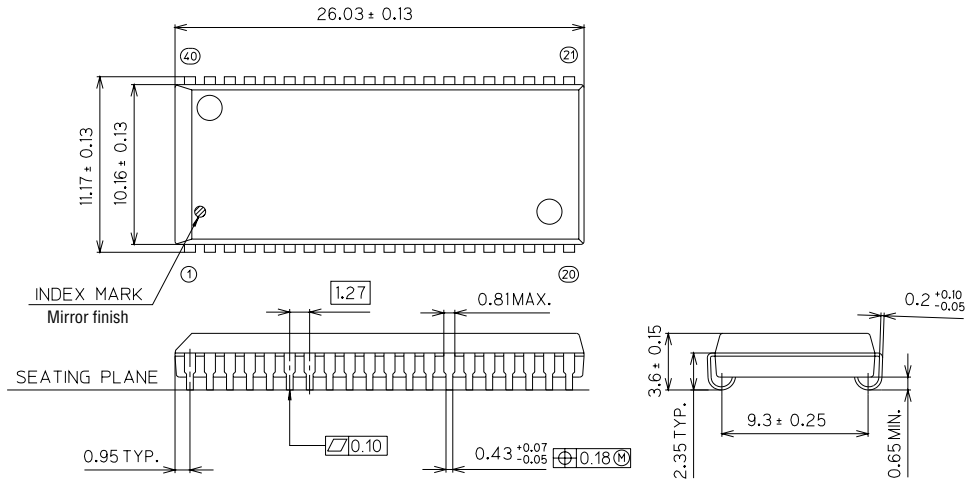

Package material	Epoxy resin
Lead frame material	42 alloy
Pin treatment	Solder plating
Solder plate thickness	5 μm or more
Package weight (g)	1.70 TYP.

Notes for Mounting the Surface Mount Type Package

The SOP, QFP, TSOP, SOJ, QFJ (PLCC), SHP and BGA are surface mount type packages, which are very susceptible to heat in reflow mounting and humidity absorbed in storage.
Therefore, before you perform reflow mounting, contact Oki's responsible sales person for the product name, package name, pin number, package code and desired mounting conditions (reflow method, temperature and times).

www.DataSheet4U.com