Details are subject to change without notice

REGULATED CHARGE PUMP DC/DC CONVERTERS

Features

www.DataSheet4U.com

- Monitored Output Voltage
  (AAT1501: $V_O = 5V \pm 4\%$)
  (AAT1501A: $V_O = 4.5V \pm 4\%$)
- Output Current: 120mA (V_{DD} = 3.3V)
  150mA (V_{DD} = 3.6V)
- Input Voltage Range: 2.7V to 5.0V
- A Power-Saving Shutdown Current of less than 1μA
- Internal Oscillation Frequency : 750kHz
- Compact SOT-23-6 Package

Pin Configuration

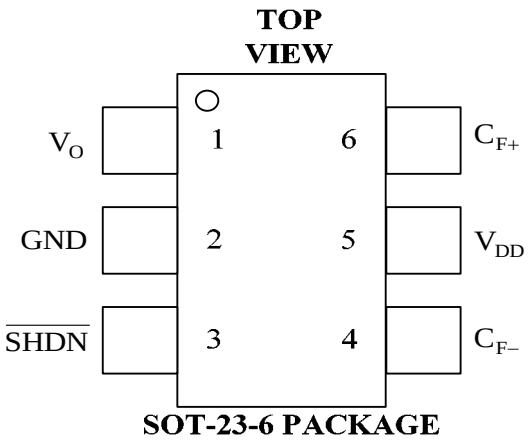

General Description

The AAT1501/A is a charge pump DC/DC converter mainly used for white LED backlighting. It operates with an input voltage ranging from 2.7V to 5.0V to generate constant 5.0V (AAT1501) or 4.5V (AAT1501A) output. The regulated output is produced by using an internal feedback switched capacitor voltage doublers.

The AAT1501/A requires no external inductor when operating. By using a flying capacitor, the AAT1501/A can deliver up to 120mA (V_{DD} = 3.3V) output current for the system. The AAT1501/A's typical ultra low operating current, and compact external parts make it an ideal component for small, portable, battery-powered applications.

AAT1501/A comes in a compact 6-pin SOT-23 package to offer users optimal and economical power management solution.

www.DataSheet4U.com

Pin Description

Pin No	Name	I/O	Description
1	V_O	O	Output Voltage
2	GND	-	Ground
3	$\overline{SHDN}$	I	Shutdown Input Pin
4	C_{F-}	O	Flying Capacitor Negative Terminal
5	V_{DD}	-	Supply Voltage
6	C_{F+}	I	Flying Capacitor Positive Terminal

www.DataSheet4U.com

Absolute Maximum Ratings

CHARACTERISTICS	SYMBOL	VALUE	UNIT
Supply Voltage	V_{DD}	6	V
Output Voltage (V_O , V_{CF+} , V_{CF-})	V_O	6	V
Input Voltage ($V_{\overline{SHDN}}$)	V_I	6	V
Storage Temperature Range	$T_{storage}$	– 45 to 125	^oC
Operating Temperature Range	T_C	– 40 to 85	^oC

www.DataSheet4U.com

Electrical Characteristics, V_{DD} = 3.3 V (Unless Otherwise Specified)

Operating Condition

Parameter	Symbol	Test Condition	Min	Typ	Max	Unit
Supply Voltage	V_{DD}		2.7		5.0	V
Supply Current	I_{DD}	V_{DD} =2.7V to 5.0V, I_O =0 , $\overline{SHDN}$ = V_{DD}	-	1.5	2.0	mA
Shutdown Current	$I_{\overline{SHDN}}$	V_{DD} =2.7V to 5.0V, I_O =0 , $\overline{SHDN}$ = 0V	-	0.01	1.00	μA
Oscillation Frequency	f_{OSC}		-	750	-	kHz
Thermal Shutdown	T_{SHDN}		-	160	-	ºC
Thermal Shutdown Hysteresis	T_{HYS}		-	20	-	ºC

Output Performance

Parameter	Symbol	Test Condition	Min	Typ	Max	Unit
Output Voltage	V_{OUT}	AAT1501	4.8	5.0	5.2	V
		AAT1501A	4.3	4.5	4.7	V
Output Current	I_O	V_{DD} =3V, $\overline{SHDN}$ = V_{DD}	80	-	-	mA
Output Ripple	V_{OR}	V_{DD} =3V, I_O =50mA	-	50	-	mV
Efficiency	η	V_{DD} =2.7V, I_O =30mA	-	83	-	%

Control Input

Parameter	Symbol	Test Condition	Min	Typ	Max	Unit
Input Current	$I_{\overline{SHDN}}$	$\overline{SHDN}$ = 0 ~ V_{DD}	-	±0.1	±1	μA
$\overline{SHDN}$ High Voltage	V_{IH}		1.1			V
$\overline{SHDN}$ Low Voltage	V_{IL}				0.5	V

www.DataSheet4U.com

Block Diagram

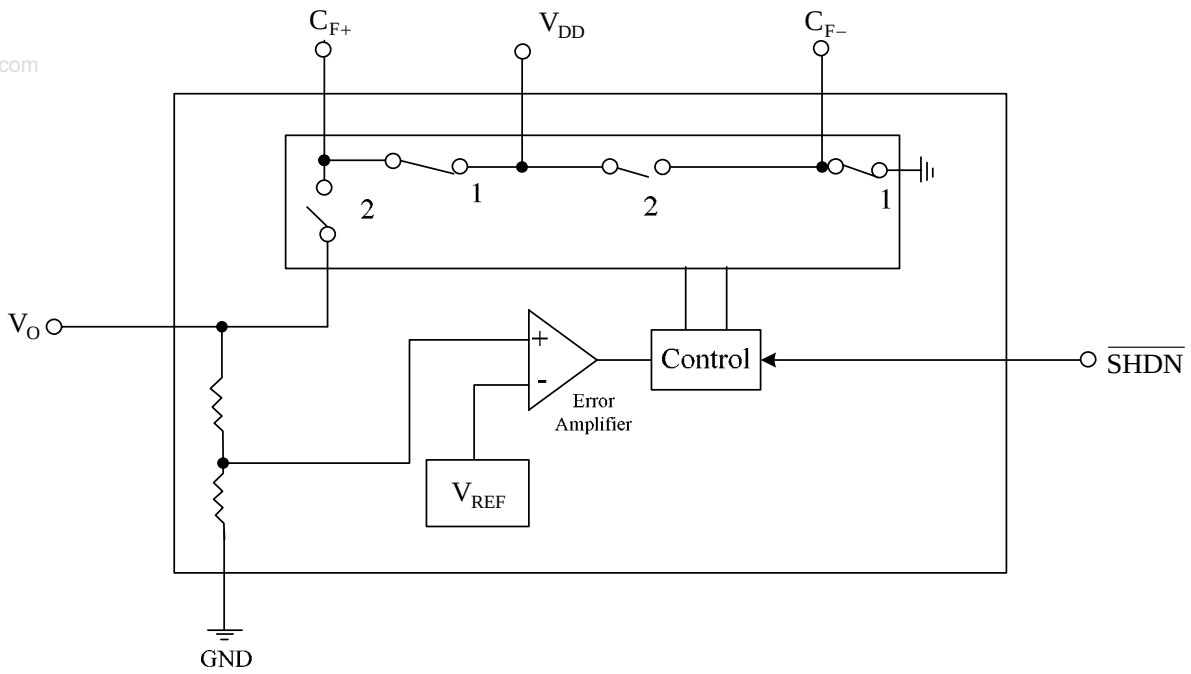

www.DataSheet4U.com

www.DataSheet4U.com

Application Circuit

www.DataSheet4U.com

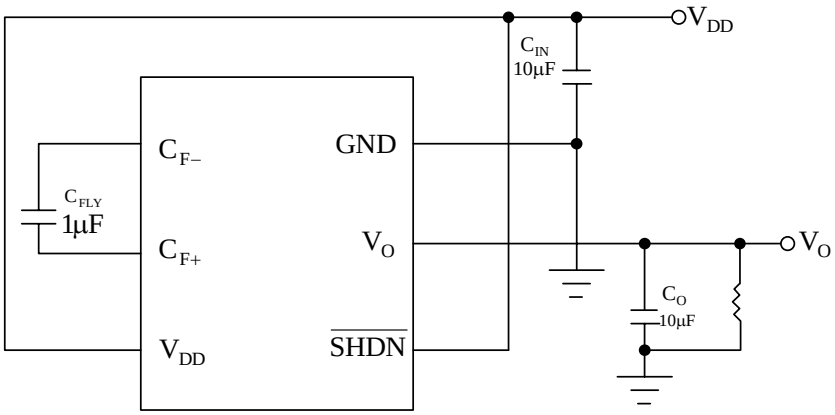

www.DataSheet4U.com

Package Dimensions

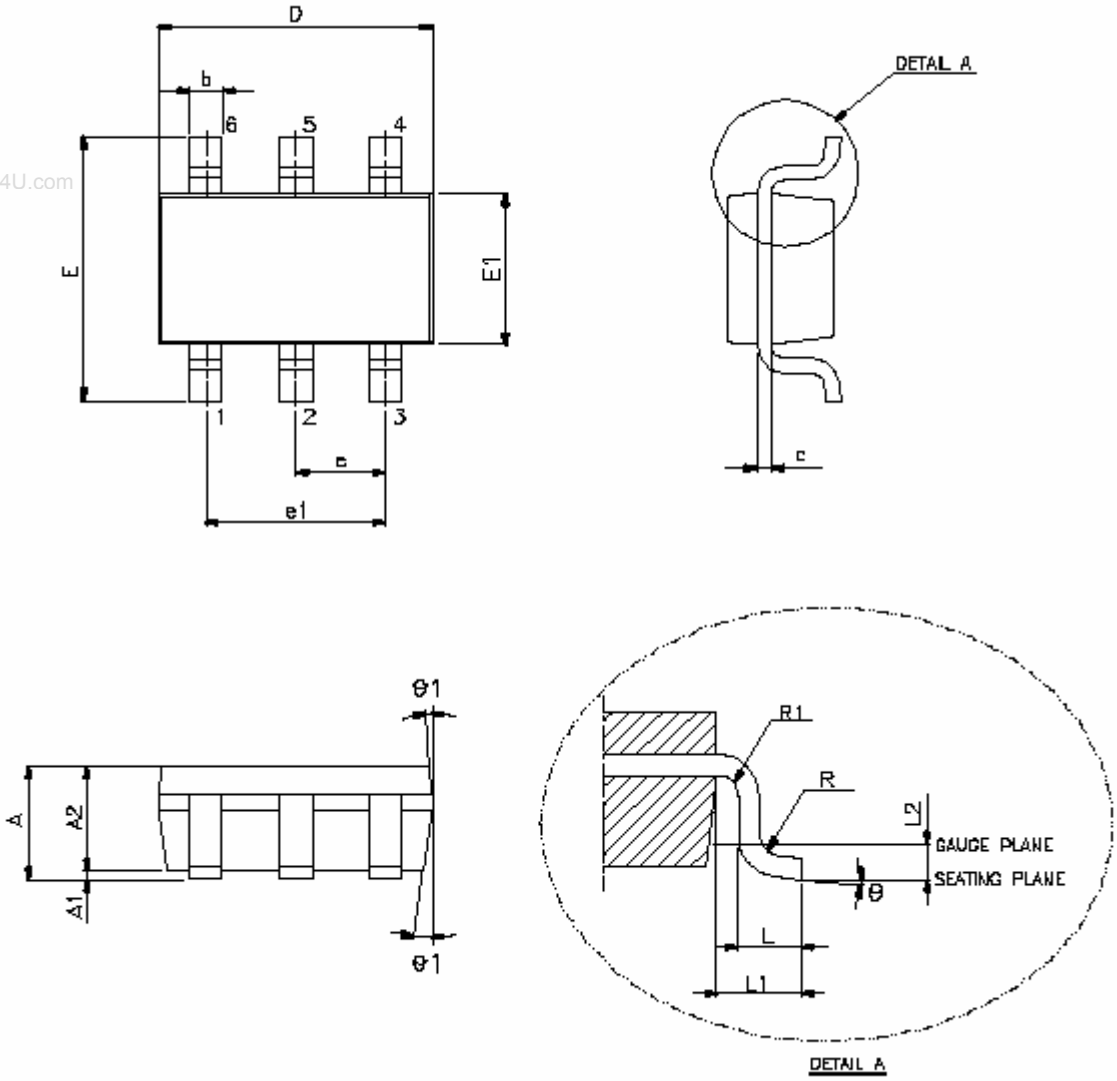

www.DataSheet4U.com

www.DataSheet4U.com

Package Dimensions (Cont.)

VARIATION (ALL DIMENSIONS SHOWN IN MILLIMETERS)

www.DataSheet4U.com

SYMBOL	MIN	TYP	MAX
A	------	------	1.45
A1	------	------	0.15
A2	0.90	1.15	1.30
b	0.30	------	0.50
c	0.08	------	0.22
D	2.90 BSC		
E	2.80 BSC		
E1	1.60 BSC		
e	0.95 BSC		
e1	1.90 BSC		
L	0.30	0.45	0.60
L1	0.60 REF		
L2	0.25 BSC		
R	0.10	------	------
R1	0.10	------	0.25
θ	0°	4°	8°
θ1	5°	10°	15°

NOTE:

1 JEDEC OUTLINE: MO-178 AB

www.DataSheet4U.com

Tape and Reel

Packing Method: 3,000pcs/reel, 5 reels/box

www.DataSheet4U.com

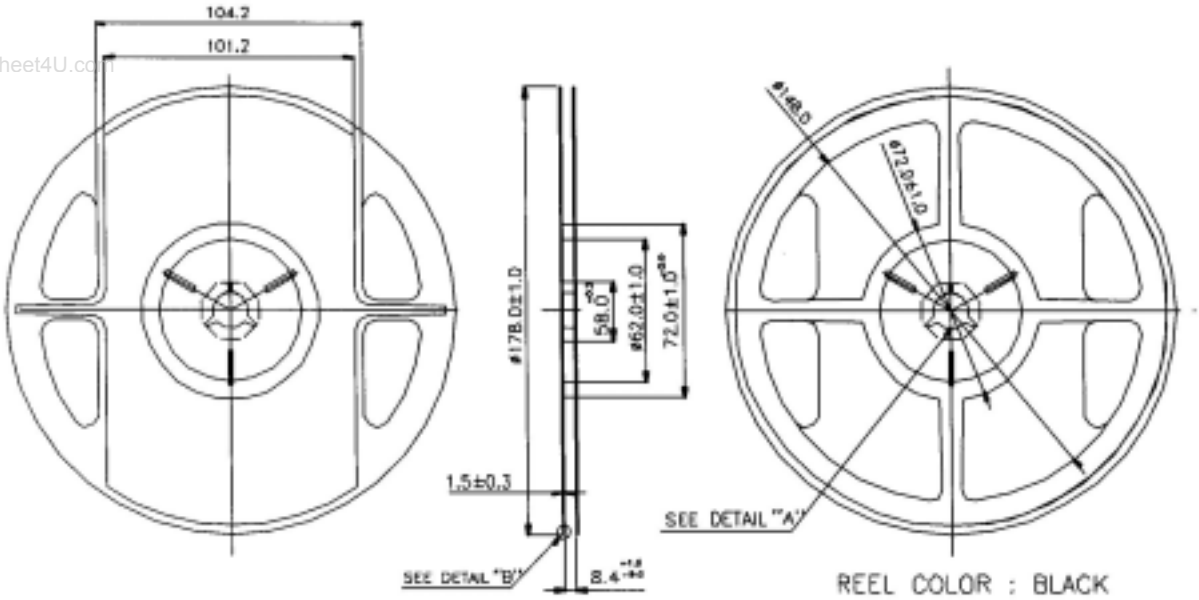

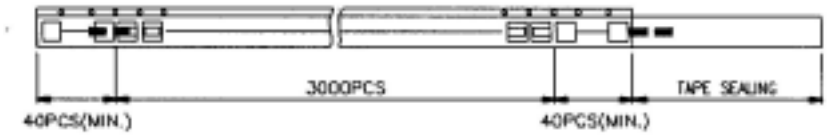

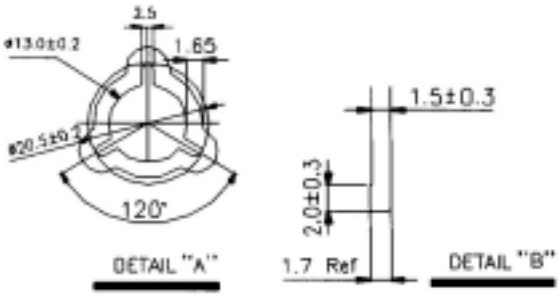

www.DataSheet4U.com

Tape and Reel (Cont.)

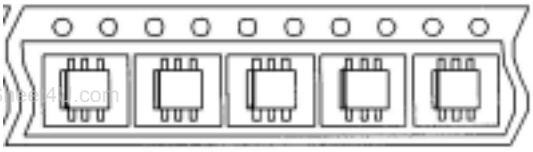

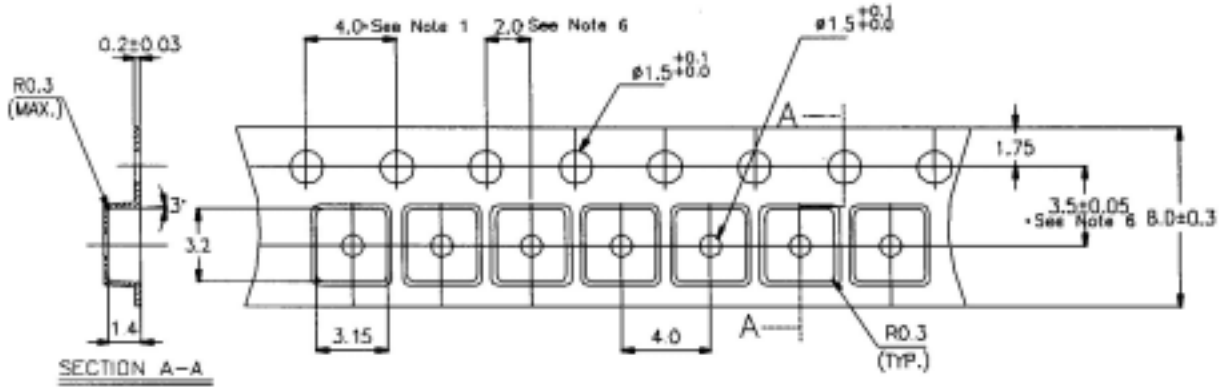

X.XXX X	±	0.0025
X.XXX	±	0.006
X.XX	±	0.025
X.X	±	0.10
X	±	0.25

UNIT: MILLIMETERS

www.DataSheet4U.com

Part Marking

SOT23-6 TOP MARKING

www.DataSheet4U.com

AXX

NOTE: SOT23-6 HAS NO BACK MARKING.

www.DataSheet4U.com