www.DataSheet4U.com

CHINA
SEMICONDUCTOR
CORPORATION

Spec. No.	PS-ND-0807
Rev.	A

PRODUCT SPECIFICATION

Model No：CSS-1814S/1815S

Descriptions:
• 1.80 Inch Single Digit Display • Emitting Color：Super Bright Red

CUSTOMER APPROVED SIGNATURES	APPROVED BY	CHECKED BY	PREPARED BY
			陳新強

CHINA SEMICONDUCTOR CORPORATION
Address:2FL. NO.909,Chung-Cheng Road,
Chung-Ho City Taipei Hsien,Taiwan.

Tel:886-2-2223-9696
Fax:886-2-2223-9377

OPTO PLUS TECHNOLOGIES CO.,LTD
Address:696 Shun jiang Rd.,Ji Shan St.Shaoxing,
ZheJiang,China

Tel:86-0575-88623888
Fax:86-0575-88623112

http://www.csctw.com.tw

www.DataSheet4U.com

www.DataSheet4U.com

Model No：CSS-1814S/1815S

Features -

1. 1.80 inch (45.0mm) digit height.
2. Case mold type.
3. RoHS compliant.
4. Low power consumption.
5. Easy mounting on P.C. board or socket.

Device Selection Guide -

Model No.	Chip		Description
	Material	Emitted Color	
CSS-1814S	AlGaAs	Super Bright Red	Common Anode
CSS-1815S	AlGaAs	Super Bright Red	Common Cathode

Mechanical Dimensions -

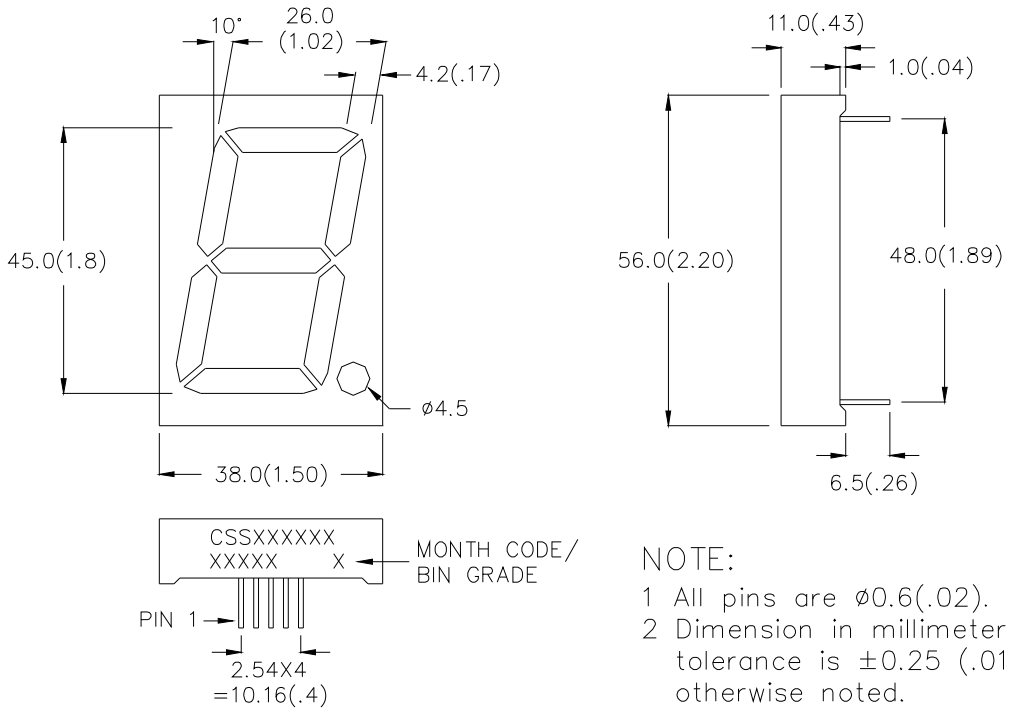

NOTE:
1 All pins are ø0.6(.02).
2 Dimension in millimeter (inch), and tolerance is ±0.25 (.01) unless otherwise noted.

www.DataSheet4U.com

www.DataSheet4U.com

Model No：CSS-1814S/1815S

■ Internal Circuit Diagrams -

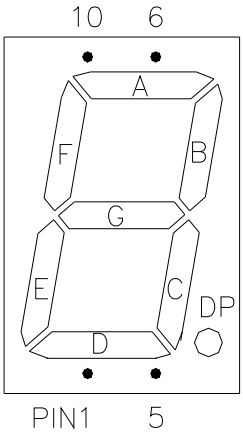

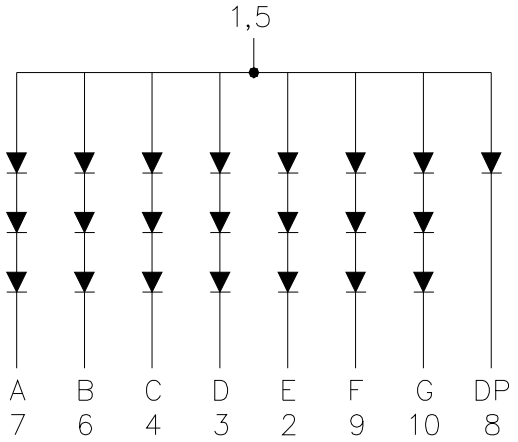

CSS-1814 Common Anode
(CSS-1815 Common Cathode.)

■ Absolute Maximum Rating -

(Ta=25℃)

Parameter	Symbol	Rating	Unit
Power Dissipation Per Dice	Pd	75	mW
Continuous Forward Current Per Dice	IAF	30	mA
Peak Current Per Dice	IPF	120	mA
Continuous Forward Current Per Dice	-	0.42	mA/℃
Reverse Voltage Per Dice	VR	5	V
Operating Temperature	Topr	-35 ~ +85	℃
Storage Temperature	Tstg	-35 ~ +85	℃
Solder temperature 1/16 inch below seating plane for 3 seconds at 260			

www.DataSheet4U.com

www.DataSheet4U.com

Model No：CSS-1814S/1815S

■ Electro-optical Characteristics -

(Ta=25℃)

Parameter	Symbol	Min.	Typ.	Max.	Unit	Condition
Forward Voltage Per Segment (DP)	VF	-	5.4(1.8)	7.5(2.5)	V	IF=20mA
Luminous Intensity Per Segment	Iv	-	25	-	mcd	IF=10mA
Peak Emission Wavelength	λP	-	660	-	nm	IF=20mA
Dominant Wavelength	λd	-	644	-	nm	IF=20mA
Spectrum Radiation Bandwidth	Δλ	-	20	-	nm	IF=20mA
Reverse Current	IR	-	-	100	μA	VR=12V
Luminous Intensity Matching Ratio	IV-m	-	-	2:1		IF=10mA

www.DataSheet4U.com

www.DataSheet4U.com

Model No：CSS-1814S/1815S

■ Typical Electrical / Optical Charateristics Curves -

(Ta = 25℃ Unless Otherwise Noted)

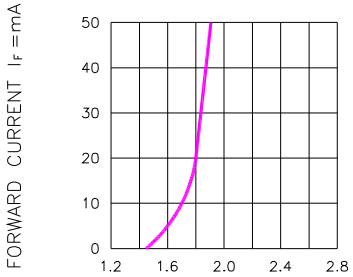

Fig.1 FORWARD CURRENT VS. FORWARD VOLTAGE

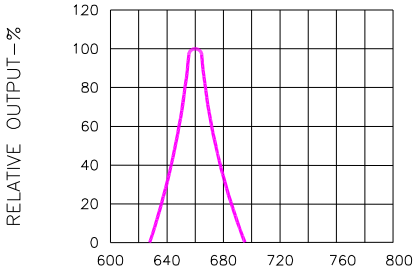

Fig.2 SPECTRAL RESPONSE

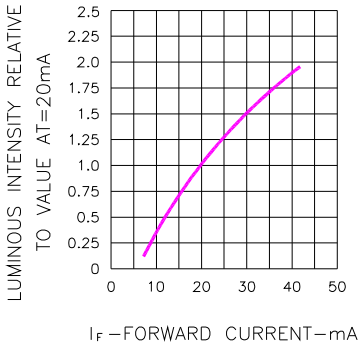

Fig.3 RELATIVE LUMINOUS INTENSITY VS. FORWARD CURRENT

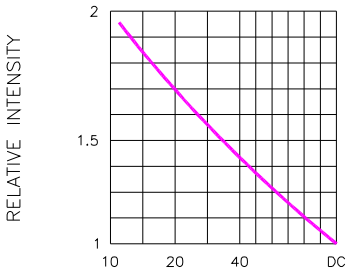

Fig.5 LUMINOUS INTENSITY VS. DUTY CYCLE

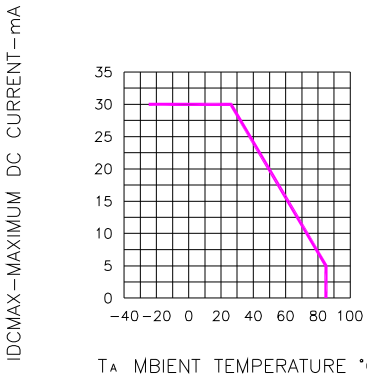

Fig.4 MAXIMUM ALLOWABLE DC CURRENT PER SEGMENT VS. A FUNCTION OF AMBIENT TEMPERATURE

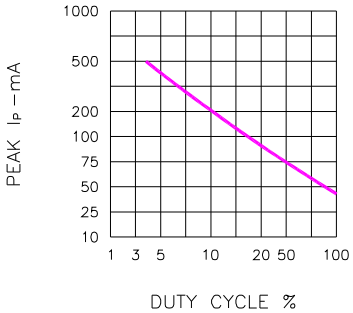

Fig.6 MAX PEAK CURRENT VS. DUTY CYCLE %
(REFRESH RATE f=1 KHz)

www.DataSheet4U.com

www.DataSheet4U.com

Model No：CSS-1814S/1815S

■ Package Dimensions

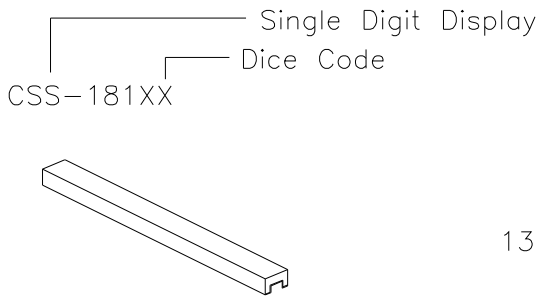

13 PCS per tube

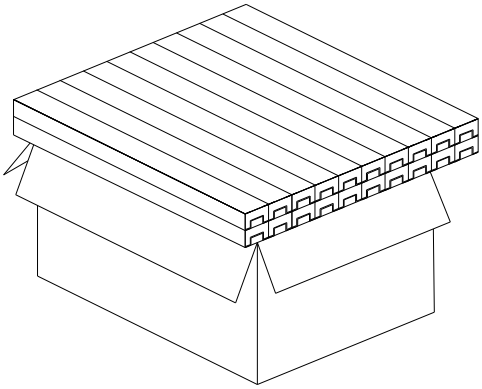

20 Tubes per inner box

Total Q'TY: 260 pcs

3 Inner boxes per carton.

Total Q'TY: 780 pcs

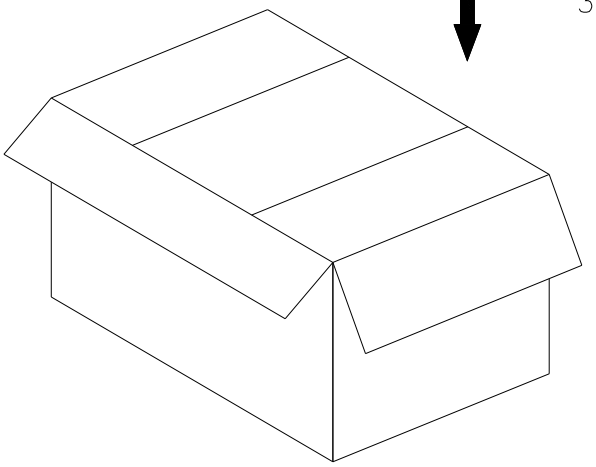

Carton size:
L54xW48.5xH30.5cm

www.DataSheet4U.com