AV-DISPLAY

www.DataSheet4U.com

CGG128064A Series

128x64 DOTS
1/65 DUTY,1/9 BIAS

OUTLINE DIMENSIONS

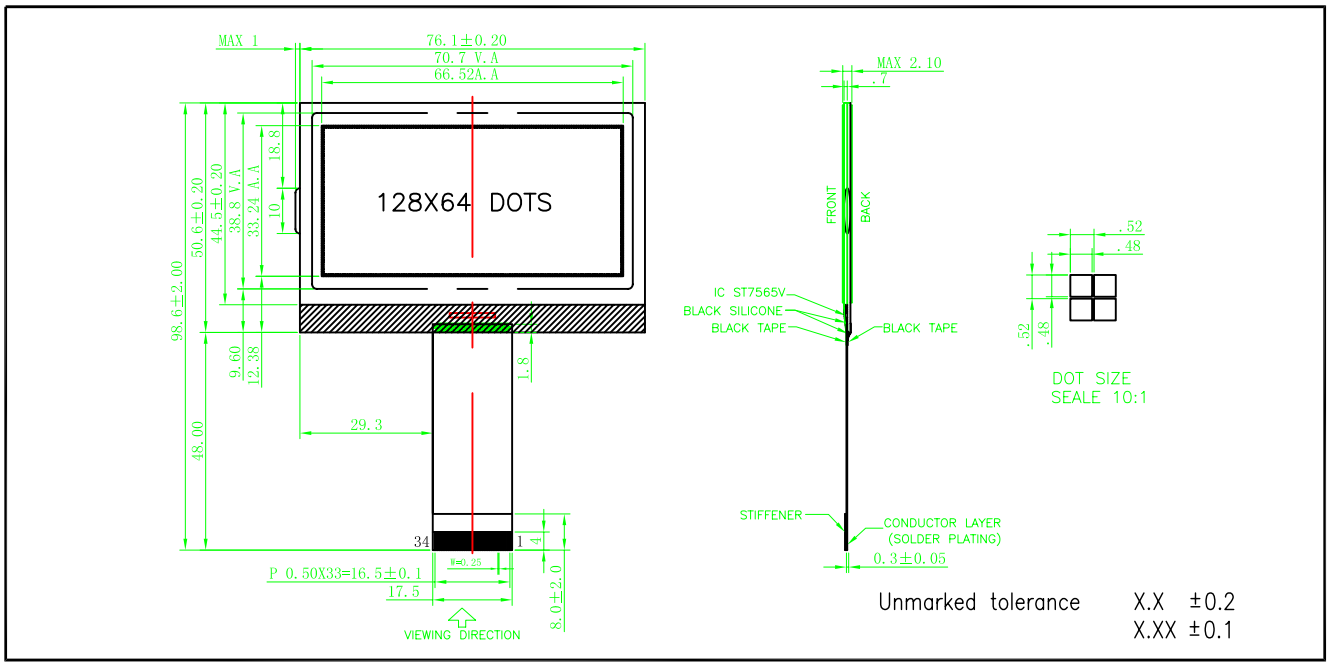

BLOCK DIAGRAM & POWER SUPPLY

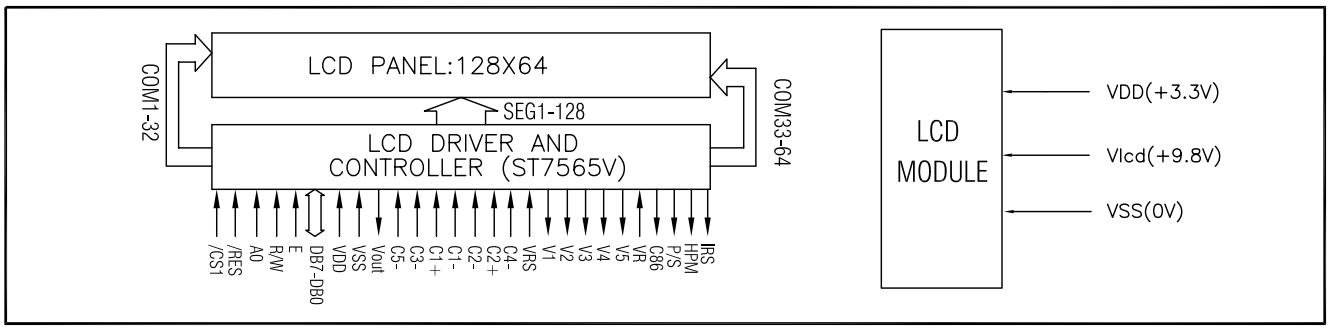

MECHANICAL SPECIFICATIONS & FEATURE

Item	Normal Dimensions(mm)	FEATURE	
Module Size (W*H*T)	76.1X98.6X2.1	LCD Type	STN、FSTN
View Area (W*H)	70.7X38.8	LCD Colour	STN:Yellow-Green、Gray FSTN:Gray
DotsxDots(W*H)	128X64	View Angle	6 O'clock、12 O'clock
Dot Pitch (W*H)	0.52X0.52	Display Type	Positive Typ、Negative Type
Dot Size (W*H)	0.48X0.48	Rear polarizer	Transflectiv、Reflective、Transflective
---	---	Operating Temperature	0°C ~ 50°C、 -10°C ~ 60°C 、-20°C~70°C
---	---	Backlight	---

ELECTRICAL CHARACTERISTICS

Item	Symbol	Test Condition	Min.	Typ.	Max.	Unit
Operating Voltage	Vdd	Ta=25° C	---	3.3	---	V
Operating Voltage for LCD	Vlcd	Ta=25° C	---	9.8	---	V
Supply Current	Idd	Ta=25° C, Vdd=3.3V	---	0.3	---	mA
Supply Current for Backlight	If	---	---	---	---	mA

INTERFACE PIN CONNECTIONS

Pin No	Symbol	Level	Description	Pin No	Symbol	Level	Description
1	/CS1	L	Chip selection	21	CAP2-	--	Capacitor 2 negative connection pin
2	/RES	L	Reset signal	22	CAP2+	--	Capacitor 2 positive connection pin
3	A0	H/L	Register selection	23	CAP4-	--	Capacitor 4 negative connection pin
4	R/W-WR	L	Write signal	24	VRS	--	Internal-output VREG power supply
5	E/RD	L	Read signal	26-29	V1-V5	--	LCD driver supply voltages
6-13	DB0-DB7	H/L	Data bus lines	30	VR	--	Output voltage regulator terminal
14	VDD		Power supply for Logic	31	C86	--	MPU interface selection
15	VSS	--	Ground for Logic	32	P/S	--	Parallel input/serial input selection
16	Vout	--	Voltage converter input/output pin	33	HPM	--	Mode selection
17	CAP5-	--	Capacitor 5 negative connection pin	34	IRS	--	Selects the resistors for the V5 voltage
18	CAP3-	--	Capacitor 3 negative connection pin				
19	CAP1+	--	Capacitor 1 positive connection pin				
20	CAP1-	--	Capacitor 1 negative connection pin				

REMARK
Old NO.:CGG128064A00

www.DataSheet4U.com