FSCTxxA-UH5

A.S.D.™
Application Specific Discretes

FAN SPEED CONTROLER

APPLICATIONS
- COMPUTER AND SERVER POWER SUPPLY
- TELECOM
- LOW COST VENTILATION (consumer)

FEATURES
- Built in thermal sensor
- Brushless DC fan speed control
- Linear control and regulation of the fan speed according to the temperature
- Green OFF mode operation with automatic turn- ON in case of overtemperature
- Voltage limitation above fan stall voltage
- No external NTC required

BENEFITS
- Low cost integrated fan speed control
- High integration: only one or two external components
- Reduced acoustic noise because of the linear control of the external transistor
- Power supply noise rejection
- Good thermal coupling with heater
- Reduced ON/OFF oscillation because of large hysteresis
- High current capability (base current higher than 10 mA)
- Higher accuracy than discrete circuit with NTC

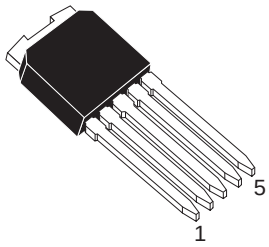

IPPAK

Fig. 1: Block Diagram.

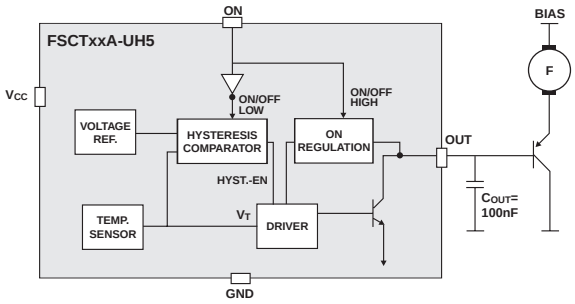

GENERAL DESCRIPTION

The FSCTxxA-UH5 is a high-integrated low cost fan speed controller suitable for PC desktops, notebooks and server power supplies and also all kind of equipments where low cost ventilation system is needed. An internal thermal sensor connected to the tab is used to regulate the fan speed. A continuous analog voltage proportional to the tab temperature is produced at the OUT terminal and can control linearly an external PNP transistor (Fan Transistor) connected in series with a Brushless DC Fan, in order to vary its speed.

The ON control terminal can be used to select two operation modes. If not connected (high impedance state) ON mode is selected by default.
In Mode ON, the fan speed is regulated according to the tab temperature of the FSCT by adjusting the Vbe voltage of the PNP fan Transistor. In low temperature conditions, the fan transistor voltage is limited to about 5.5V (for a 12V fan) in order to guarantee a minimum voltage across the fan above its stalling voltage and to keep it running (see figure 3).

This regulation is implemented with a high Fan supply voltage rejection.

www.DataSheet4U.com

The mode OFF allows to operate in green Mode. The fan is stopped as long as the temperature remains below the TON threshold. When the temperature rises above TON the fan is forced to ON and the speed is regulated according to the temperature as in the same way as mode ON. When temperature falls below TOFF, the fan is automatically turned OFF. The hysteresis has been dimensioned large enough to reduce ON/OFF oscillations during the green mode operation.

www.DataSheet4U.com

PINT OUT DESIGNATION

Pint Out designation	Description	Pin
TEST	Test pin (must not be connected)	1
V_{CC}	Operating DC supply	2
GND	Ground (internally connected to the tab)	3
ON	Mode ON and OFF selection	4
OUT	Output (connect to PNP fan transistor base)	5

ABSOLUTE MAXIMUM RATINGS

Symbol	Parameter	Value	Unit
V_{CC}	Supply voltage referenced to GND	-0.3 to 20	V
T_j	Operating junction temperature	0 to 125	°C
Tstg	Storage temperature	-65 to 150	°C
T_L	Lead temperature (double wave soldering)	260	°C
	Maximum voltage at any pin	V_{CC}	V
	Minimum voltage at any pin	-0.3	V
ESD	Electrostatic discharge immunity at each terminal (human body model)	2	kV

ELECTRICAL CHARACTERISTICS (Continue)

V_{CC} from 9Vdc to 15Vdc, C_{out} = 100nF, T_j = 0°C to 125°C, otherwise specified

Symbol	Parameter	Test conditions		Value			Unit
				Min.	Typ.	Max.	
SUPPLY							
I_{CCmax}	Operating supply current	V_{ON} = 5V or 0V V_{CC} = 12V			1.1	3	mA
DRIVER							
I_{OL}	Sinking current capability at the OUT terminal	$V_{OUT} = V_{OL}$ and T_j = 125°C		10			mA
I_{LEAK}	Maximum sink leakage current at OUT pin (mode OFF)	V_{OUT} = 20V, V_{ON} = 0V T_j = 50°C				10	µA
V_{OL}	Minimum voltage at the OUT terminal (mode ON)	V_{ON} = 5V, T_j = 125°C			0.55	0.7	V
V_{OMS}	OUT voltage for minimum fan speed (mode ON)	V_{ON} = 5V, T_j from 0°C to T_{MS}			5.3	5.5	V
	Static line regulation	V_{CC} = 9V to 15V, V_{ON} = 5V T_j = 25°C			0.5		mV/V
K_{SL}	V_{OUT} temperature slope	V_{OUT} = 80% V_{OMS} to 20% V_{OMS}	FSCT17A-UH5	155	165	175	mV/°C
			FSCT11A-UH5	100	107	114	
			FSCT07A-UH5	68	72	77	

www.DataSheet4U.com

www.DataSheet4U.com

ELECTRICAL CHARACTERISTICS (Continue)

V_{CC} within the supply voltage range, C_{out} = 100nF, T_j = 0°C to 125°C, otherwise specified

Symbol	Parameter	Test conditions		Value Min.	Value Typ.	Value Max.	Unit
TEMPERATURE MANAGEMENT (all T° threshold are guaranteed by design)							
T_{MS}	Temperature regulation threshold	$V_{OUT} = V_{OMS}$ V_{ON} = 5V		32	37	42	°C
T_{ON}	OFF mode switch ON temperature	V_{CC} = 12V V_{ON} = 0V		66	71	76	°C
T_{OFF}	OFF mode switch OFF temperature	V_{CC} = 12V V_{ON} = 0V		34	39	44	°C
T_{OL}	Minimum temperature for maximum speed	V_{CC} = 12V V_{ON} = 5V $V_{OUT} = V_{OL}$	FSCT17A-UH5	61	66	71	°C
			FSCT11A-UH5	76	81	86	
			FSCT07A-UH5	97	102	107	
T_{V3}	Tab temperature for V_{OUT} = 3V (*) *(see figure 3)*	V_{OUT} = 3V V_{ON} = 5V	FSCT17A-UH5	49	52	55	°C
			FSCT11A-UH5	56	59	62	
			FSCT07A-UH5	66	69	72	
ON SIGNAL							
V_{IH}	Voltage range for ON mode			1			V
V_{IL}	Voltage range for OFF mode					0.3	V
I_S	Source current at the ON pin *(see figure 2)*	V_{CC} = 12V ON terminal shorted to ground			10	25	µA

(*) Absolute temperature dissipation applicable on all V_{OUT} range between V_{OMS} and V_{OL}

THERMAL PARAMETERS

Symbol	Parameter	Value	Unit
$Rth_{(j-c)}$	Thermal resistance junction to case	3	°C/W

Fig. 2: "ON" input schematic diagram.

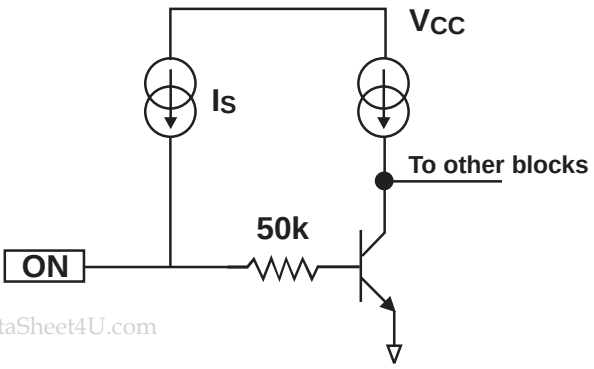

www.DataSheet4U.com

www.DataSheet4U.com

Fig. 3: Temperature slopes.

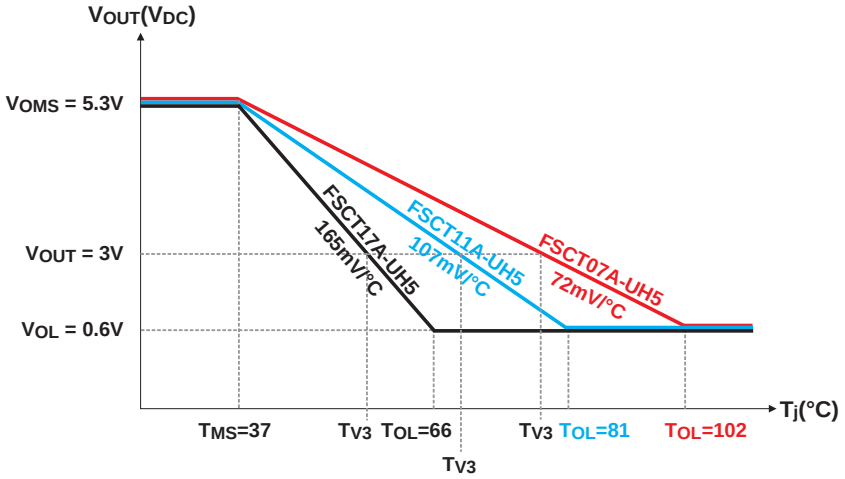

Fig. 4: I_{CC} versus V_{CC} for mode ON.

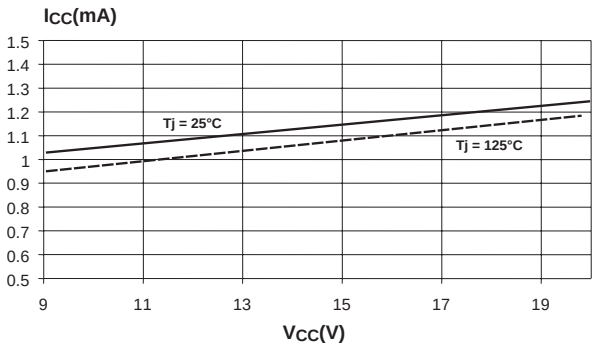

Fig. 5: I_{CC} versus V_{CC} test circuit (mode ON).

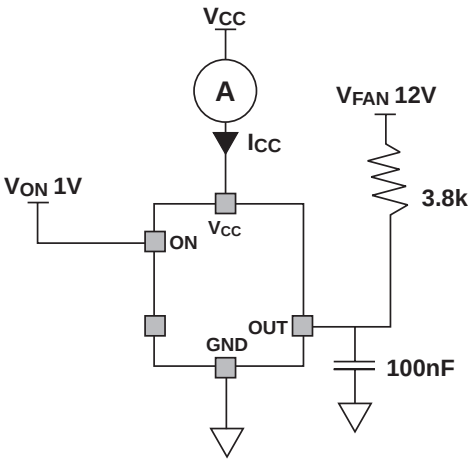

www.DataSheet4U.com

www.DataSheet4U.com

DETAILED DESCRIPTION & APPLICATION INFORMATION

1. OUTPUT CHARACTERISTIC VERSUS TEMPERATURE

1.1 FAN speed control

As it's well known, BRUSHLESS DC motors present the advantage of a quasi-linear speed-voltage characteristic. Hence, the fan speed is varying linearly versus the voltage which is applied across its terminals.

The FSCT Integrated Circuit provides at its OUT terminal, a voltage which changes versus the temperature sensed through its tab. This OUT voltage decreases as temperature increases, following two modes of operation. By connecting this OUT terminal to the Base of a PNP transistor, as shown in *figure 1*, the FAN voltage will increase with the sensed temperature.

The FAN voltage is given by the following equation: $V_{FAN} = V_{FAN+} - V_{EB} - V_{OUT}$ (1)

Typically, for a 12 V V_{FAN+} and a 1 V V_{EB} voltage, this gives: $V_{FAN(V)} = 11 - V_{OUT(V)}$ (2)

It can be noticed that the PNP operates as a linear amplifier. This avoids EMI and acoustic noise compared to Pulse Width Modulation control circuits.

1.2 ON/OFF Mode Selection

The *figure 6* gives the algorithm flowchart of the FSCT behavior. First, two modes of operation are distinguished by the ON pin signal.

- Mode ON: activated when ON pin is at High Level or Not Connected (thanks to an internal Pull-up curren source "I_S")
- Mode OFF: activated when ON pin is at Low Level.

During Mode ON, the OUT voltage follows a three-parts characteristic, according to its junction temperature (T_j):

- $T_j < T_{MS}$: in this case, V_{OUT} is limited to V_{OMS} to avoid stalling the fan rotor
- $T_{MS} < T_j < T_{OL}$: V_{OUT} is linearly regulated versus the junction temperature
- $T_j > T_{OL}$: in this case, V_{OUT} is clamped to its minimum value (V_{OL}).

During Mode OFF, an Hysteresis control allows the system to switch to mode ON only if the temperature exceeds the T_{ON} value. The Fan is turned back off, if the system is cooled enough to lower the temperature below T_{OFF}.

The *figure 7* sums up the FSCT Output characteristic versus the temperature, for the two operation modes.

1.3 Minimum speed (mode ON)

Mode ON allows users to ensure that the FAN will be always ON, whatever the ambient temperature is.

The OUT voltage is clamped to V_{OMS} for low temperature (below T_{MS} = 37 °C typically).

The V_{OMS} has been set to 5.5 V max , thus the minimum voltage applied across the FAN is 5.5 V (according to *Equation 2*). This voltage is above stalling value of most fans and will then ensure that the controlled FAN will always run, in mode ON, avoiding spurious turn-off due to too low voltage at low temperature. Annoying noises due to FAN repetitive starts up are also suppressed.

www.DataSheet4U.com

Fig. 6: FSCT behavior flow-chart.

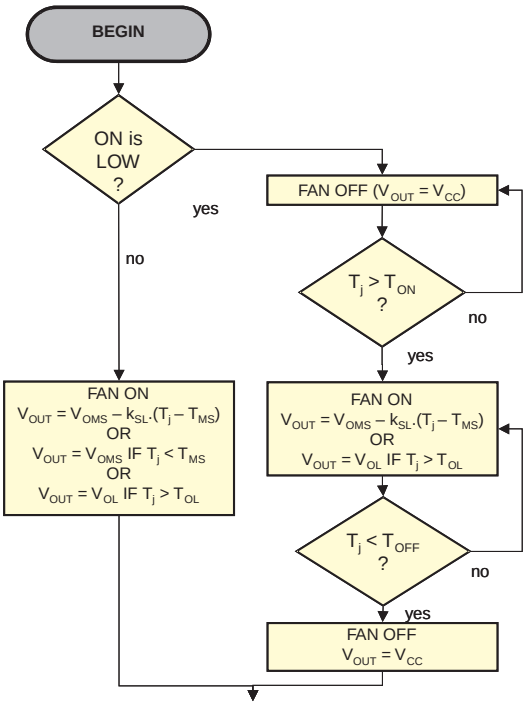

www.DataSheet4U.com

2. Hysteresis control (mode OFF)

FSCT can be shut down by the ON signal. When, this signal is low, the OUT pin is at high level, i.e. the FAN is turned off.

This mode enables to save the energy wasted by the FAN in case of operations at very low output power. For a 12 V supply voltage, the shut-down of the FAN brings a 0.5 to 2.5 W power saving (for a 200 mA 12 V DC motor).

During the mode OFF, the FSCT doesn't lose temperature control; indeed, in case of over-temperature, the FAN is automatically switched on. This safety feature protects the power supply or the semiconductor devices from unexpected over-temperature.

In order to keep the energy saving benefit, the FSCT turns back off the FAN when the temperature falls below T_{OFF} threshold.

In practice, three cases can appear for a constant applied heating power (for instance, the output power of the power supply where the FSCT is used) (cf. *figure 8*):

- **Case 1:** the heating power is too low, and keeps T_j below T_{ON}. The FAN remains OFF.
- **Case 2:** the heating power is high enough to raise T_j above T_{ON}. But, as this power is quite low, T_j falls down T_{OFF}, and the temperature starts again to increase, up to T_{ON}. This results in a FAN ON/OFF periodical cycle.
- **Case 3:** the heating power is higher that in case 2, so that Tj remains above T_{OFF}. The FAN stays ON in that case, unless the heating power decreases.

For example, with a 200 W computer power supply, working with a FSCT17 device put on the power semiconductors heatsink, Case 1 could be reached for a 25 W output power consumption (T_j will stabilize around 60 °C, i.e. below typical T_{ON}).

Case 2 could be reached for a 50 W power consumption. Then, thanks to the large Hysteresis value (30 °C typ.), the ON/OFF period (refer to T_P on *figure 8*) lasts approximately 15 minutes. This is long enough to avoid too many FAN starts-up cycle per hour.

Case 3 could be reached for a 75W, or higher, power consumption. For 75W, the power supply ambient temperature stabilizes itself around 42°C.

It should be noted that, for Case 3, such steady state points of operation, are allowed due to the fact that the OUT voltage follows the same linear law as that in ON mode. Then, the Hysteresis control is smarter than a simple ON/OFF control mode.

Fig. 7: OUT voltage versus junction temperature.

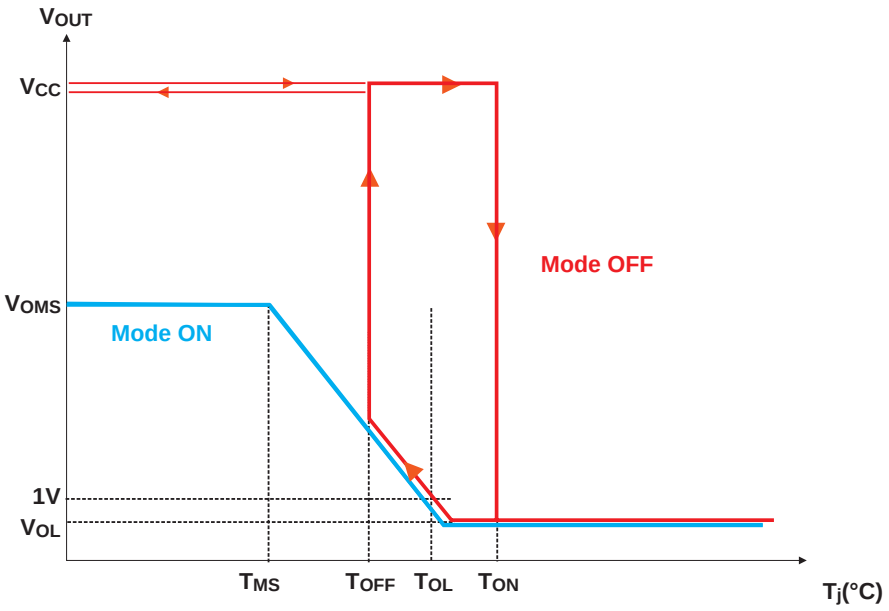

www.DataSheet4U.com

www.DataSheet4U.com

Fig. 8: Temperature evolution cases in mode OFF.

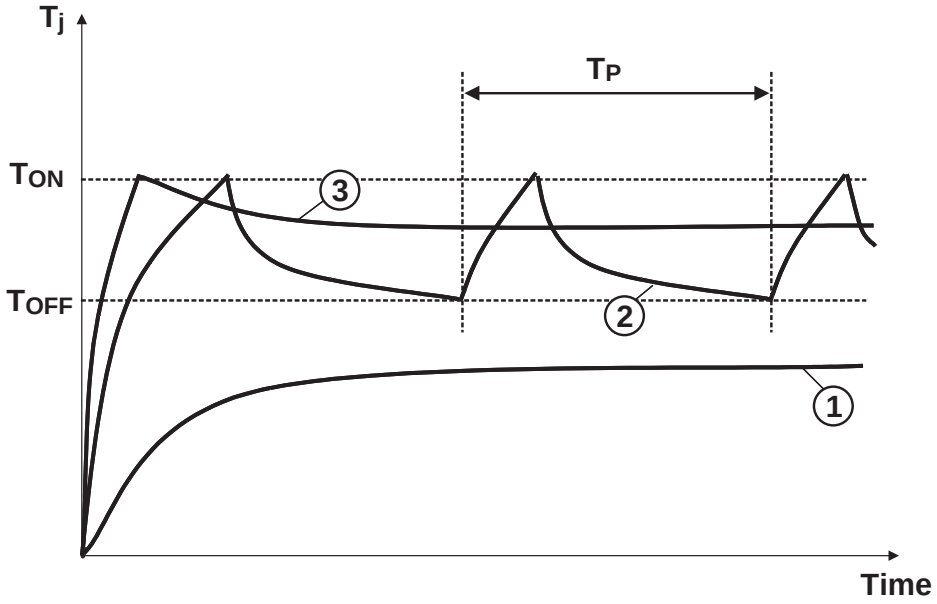

3. Internal temperature sensor

3.1 Temperature sensor linear response

FSCT devices feature an internal temperature sensor. This sensor results directly from silicon properties. It is actually a voltage reference which is proportional to the absolute temperature, as it is an image of the Silicon thermal voltage "Vt" (refer to the following equation).

$$Vt = \frac{k \cdot T}{q} \text{ with: } \begin{cases} k: \textit{Boltzmann constant} \\ T: \textit{absolute temperature } (K) \\ q = 16 \cdot 10^{-19} C \end{cases}$$

This sensing method, which presents a positive temperature coefficient of +2mV/°C is preferred to a V_{BE} sensing method (-2mV/°C, sometimes used in thermal protections) because of its better accuracy (low impact of process dispersions).

This signal is then processed to provide the desired OUT voltage range.

This internal sensor allows users not to use a Negative Temperature Coefficient thermistor (NTC).

Hence, users get rid of Joule effect, due to NTC bias current, that disturbs the temperature measurement. Furthermore, the FSCT response is linear with the temperature. This simplifies the thermal study and the heat sink rating for the power supply components or for the microprocessor.

NTC thermistors users need also to add a fixed resistor in order to get a linear thermal response from such kind of sensor. The linear behavior is also only ensured for a restricted temperature range.

3.2 IPPAK mounting considerations

First, it should be noted that the tab is directly connected to the GND pin; then care must be taken when the FSCT is glued to a heatsink. If this heatsink is at a differential voltage that the Ground, an electrical insulator has to be added between the tab and the heat-sink.

Using non-isolated Through-Hole package like the IPPAK offers also a lot of benefits, compared to NTC bulbs. Indeed, NTC do not offer a flat area like IPPAK package. Users need to add some glue to ensure contact of the NTC bulb and the heat sink, at the cost of an increase in the thermal impedance and response.

www.DataSheet4U.com

www.DataSheet4U.com

Two components should be used to improve the heat exchange between the FSCT die and the heat sink, that the temperature has to be monitored. These components are:

- A thermal interface pad, in order to reduce the impact of air voids on the thermal impedance and to ensure an electrical insulation (if needed)
- A clip to push the IPPAK against the heat sink and then to reduce also the interface thermal impedance.

Several clips can be used depending on the heat sink type:

- Saddle clips (cf. *figure 9*) for slim heat sink;
- U-clips (cf. *figure 10*) for thick heat sink
- Dedicated clips for special shape heat sink.

Fig. 9: IPPAK mounted with a Saddle clip.

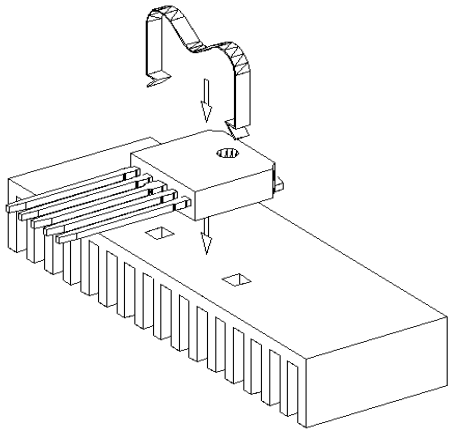

Fig. 10: IPPAK mounted with a U-clip.

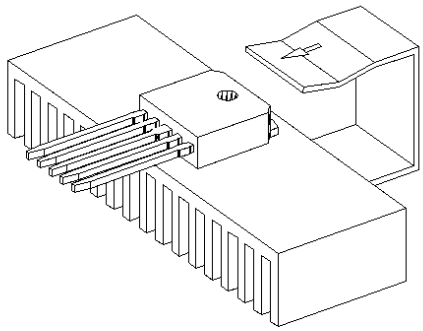

It can be noticed that the thickness of the IPPAK package (2.3 +/- 0.1 mm) is similar to those of SOT-32 and SOT-82 (2.55 +/- 0.15 mm). The same clips can so be used for all these packages.

3.3 Temperature measurement error

Firstly, the time constant between a temperature variation on the external side on the IPPAK copper tab, and the silicon die is in the range of a few hundred of milliseconds. As temperature phenomena are extremely slow for the targeted applications (the temperature of a MOSFET heat sink, increases typically with an 1°C per second rate, in a power supply), the FSCT is able to react immediately to over-heating events.

Moreover, the very low junction to case thermal resistance (3 °C/W) reduces as much as possible the temperature measurement error.

We calculate, in the following, this error considering both the package and the heatsink-Tab interface thermal resistances (*figure 11*).

Several companies offer adhesive and isolating materials to be used as interface between electronic devices and a heat sink. These interfaces can be provided with a shape dedicated for the Tab foot print. For the IPPAK package, users could choose a shape dedicated for SOT-32, SOT-82 or even TO-126 or TO-220 packages (the more can do the less).

www.DataSheet4U.com

Fig. 11: IPPAK Heatsink Interface.

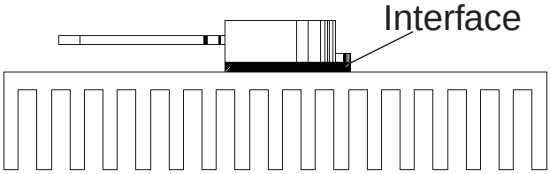

www.DataSheet4U.com

These interfaces offer very low thermal resistance. For example, the Sil-Pad® 800 family, from BERGQUIST, which is designed for low cost applications and low mounting pressures, present a typical thermal impedance of 0.45 °C.in²/W. This impedance can increase up to 0.92 °C.in²/W for a 10 psi pressure, which is below the normal atmospheric one (1 atm = 1013 hPa = 1013 x 100 x 14.5 x 10-3 = 14.7 psi).

Furthermore, a mounting clip will apply a force between 15 to 50 N. This leads to a 25 to 200 psi pressure. In this case, the thermal impedance varies from 0.6 to 0.29 °C.in²/W for the Sil-Pad® 800 family.

For the example, we take the worst case hypothesis of a 1°C.in²/W interface between the FSCT case and the heat sink.

We take into account only the tab surface for the heat exchange. This surface equals typically:

S = 4.7 x 5.1 mm^2 = 0.037 in^2

This yields to a supplementary resistance of: R_{thc-h} = 1/0.037 = 27°C/W

Then, the maximum power dissipated in the FSCT, for the maximum output power, is given by the following equation:

$$P_{max} = I_{CC} \cdot V_{CC} + I_{OUT} \cdot V_{OMS}$$

The following numerical application gives (for a 150 mA FAN DC current, a 80 gain for the PNP and a 12 V power supply):

I_{OUT} = 150 / 80 = 1.87mA

$P_{max} = 3 \times 12 \times 10^{-3} + 1.87 \times 5.5 \times 10^{-3} = 46mW$

Then, the temperature error is: $\Delta T = 0.046 \times (3 + 27) = 138°C$

The temperature sensing error can then be neglected whan one considers the operation range (from 0 to 100 °C), even with low cost interface material and without any mounting clip. For example, with a higher pressure, thanks to a clip, this error could be divided by three.

4. TEMPERATURE/VOLTAGE SLOPE CHANGE

The OUT voltage versus temperature characteristic of the FSCT has been designed to fit majority cases of application, in the field of PC power supplies.

The advantage for the user is to have a minimum count of components while achieving a smart temperature regulation.

Nevertheless, some applications require dedicated temperature regulation characteristic. *Figure 13* provides an example of a solution which allows to change the ratio between PNP base voltage and the temperature. This schematic only requires a dual single-voltage amplifier (in DIL8 package for example) and less than ten supplementary resistors.

This schematic keeps the advantage of applying a constant minimum voltage (V_{OMS}) below T_{MS} temperature. Indeed, the U1A operational amplifier subtracts 5.1 V (thanks to the D1 Zener diode, refer to V_{REF}) from V_{OUT}. This means that the ratio change is only taken into account when V_{OUT} is lower than 5.1 V. For higher voltages (V_{OMS} in mode ON or V_{CC} in mode OFF), the new base to GND voltage (V_{NEW}) remains the same (cf. *figure 12*).

So, if one wants to increase accurately the voltage-temperature ratio, i.e. that V_{OUT} will decrease more quickly when T_j increases, *figure 13* schematics should be implemented. Indeed, the voltage at the operational amplifier U1B (which acts as a follower) output is:

Fig. 12: Modified characteristics.

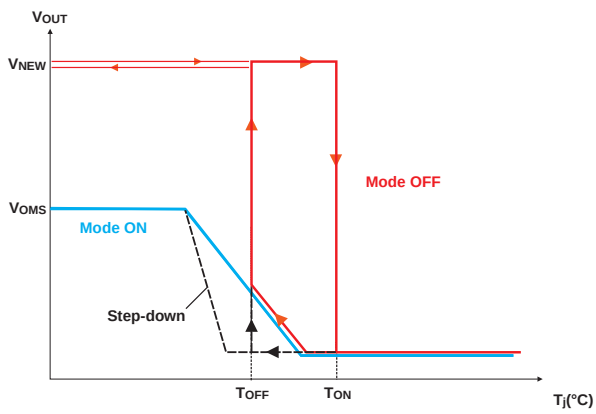

www.DataSheet4U.com

$$\begin{cases} V_{NEW} = V_{OUT} \text{ if } V_{OUT} > V_{REF} \\ V_{NEW} = V_{OUT} - \dfrac{RN}{RD} \cdot (V_{REF} - V_{OUT}) \text{ otherwise} \end{cases}$$

www.DataSheet4U.com

Fig. 13: Step-down OUT voltage schematic.

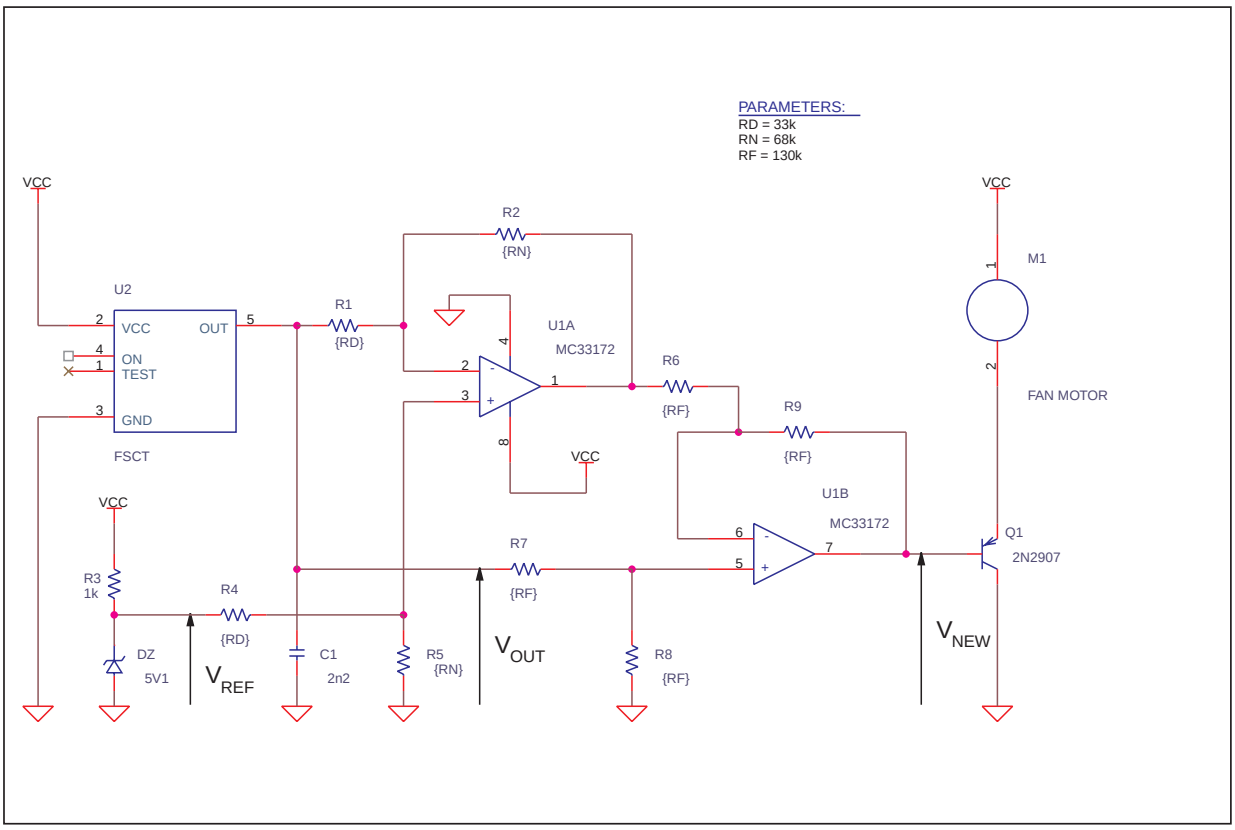

www.DataSheet4U.com

www.DataSheet4U.com

PACKAGE MECHANICAL DATA
IPPAK

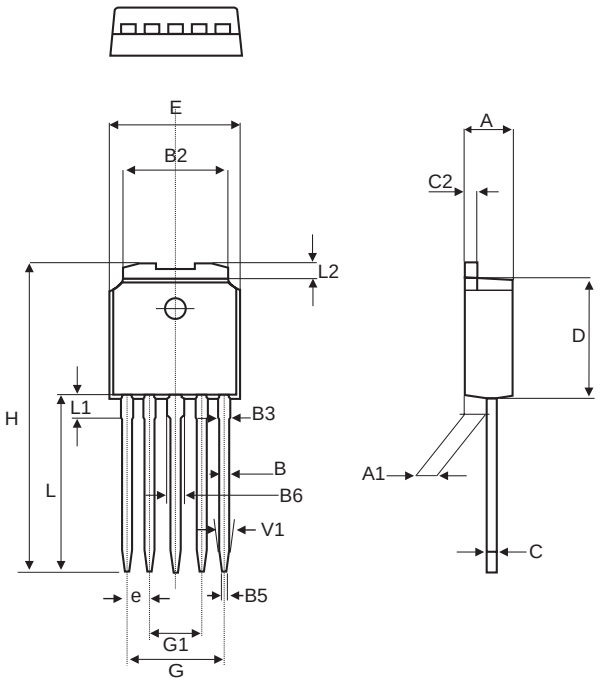

REF.	DIMENSIONS					
	Millimeters			Inches		
	Min.	Typ.	Max	Min.	Typ.	Max.
A	2.20		2.40	0.086		0.094
A1	0.90		1.10	0.035		0.043
B	0.40		0.60	0.015		0.023
B2	5.20		5.40	0.204		0.212
B3			0.70			0.027
B5		0.30			0.011	
B6			1.00			0.039
C	0.45		0.60	0.017		0.023
C2	0.48		0.60	0.018		0.023
D	6.00		6.20	0.236		0.244
E	6.40		6.60	0.215		0.259
e		1.27			0.050	
G	4.9		5.25	0.192		0.206
G1	2.38		2.70	0.093		0.106
H	15.90		16.30	0.625		0.641
L	9.00		9.40	0.354		0.370
L1	0.80		1.20	0.031		0.047
L2		0.80	1.00		0.031	0.039
V1		10°			10°	

Order code	Marking	Package	Weight	Delivery mode	Base qty
FSCT17A-UH5	FSCT17A	IPPAK	0.4 g	Tube	75
FSCT11A-UH5	FSCT11A				
FSCT07A-UH5	FSCT07A				

Information furnished is believed to be accurate and reliable. However, STMicroelectronics assumes no responsibility for the consequences of use of such information nor for any infringement of patents or other rights of third parties which may result from its use. No license is granted by implication or otherwise under any patent or patent rights of STMicroelectronics. Specifications mentioned in this publication are subject to change without notice. This publication supersedes and replaces all information previously supplied. STMicroelectronics products are not authorized for use as critical components in life support devices or systems without express written approval of STMicroelectronics.

The ST logo is a registered trademark of STMicroelectronics.

All other names are the property of their respective owners.

© 2003 STMicroelectronics - All rights reserved.

STMicroelectronics GROUP OF COMPANIES

Australia - Belgium - Brazil - Canada - China - Czech Republic - Finland - France - Germany - Hong Kong - India - Israel - Italy - Japan - Malaysia - Malta - Morocco - Singapore - Spain - Sweden - Switzerland - United Kingdom - United States

www.st.com

www.DataSheet4U.com

www.DataSheet4U.com