PESD5V0X1BA; PESD5V0X1BL

Ultra low capacitance bidirectional ESD protection diodes

Rev. 01 — 4 November 2008 Product data sheet

1. Product profile

1.1 General description

Ultra low capacitance bidirectional ElectroStatic Discharge (ESD) protection diodes in small Surface-Mounted Device (SMD) plastic packages designed to protect one signal line from the damage caused by ESD and other transients.

Table 1. Product overview

Type number	Package		Package configuration
	NXP	JEITA	
PESD5V0X1BA	SOD323	SC-76	very small
PESD5V0X1BL	SOD882	-	leadless ultra small

1.2 Features

- Bidirectional ESD protection of one line
- Ultra low diode capacitance: C_d = 0.9 pF
- Very low leakage current: I_{RM} = 1 nA
- ESD protection up to 9 kV
- IEC 61000-4-2; level 4 (ESD)
- AEC-Q101 qualified

1.3 Applications

- USB interfaces
- Antenna protection
- 10/100/1000 Mbit/s Ethernet
- FireWire
- High-speed data lines
- Subscriber Identity Module (SIM) card protection
- Cellular handsets and accessories
- Portable electronics
- Communication systems
- Computers and peripherals
- Audio and video equipment

www.DataSheet4U.net

1.4 Quick reference data

Table 2. Quick reference data

T_{amb} = 25 °C unless otherwise specified.

Symbol	Parameter	Conditions	Min	Typ	Max	Unit
Per diode						
V_{RWM}	reverse standoff voltage		-	-	5	V
C_d	diode capacitance	f = 1 MHz; V_R = 0 V	-	0.9	1.3	pF

founded by Philips

2. Pinning information

Table 3. Pinning

Pin	Description		Simplified outline	Graphic symbol
PESD5V0X1BA				
1	cathode (diode 1)	[1]	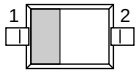	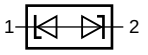 006aab041
2	cathode (diode 2)			
PESD5V0X1BL				
1	cathode (diode 1)	[1]	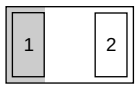 Transparent top view	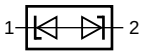 006aab041
2	cathode (diode 2)			

[1] The marking bar indicates the cathode.

3. Ordering information

Table 4. Ordering information

Type number	Package		
	Name	Description	Version
PESD5V0X1BA	SC-76	plastic surface-mounted package; 2 leads	SOD323
PESD5V0X1BL	-	leadless ultra small plastic package; 2 terminals; body 1.0 × 0.6 × 0.5 mm	SOD882

4. Marking

Table 5. Marking codes

Type number	Marking code
PESD5V0X1BA	69
PESD5V0X1BL	XX

5. Limiting values

Table 6. Limiting values

In accordance with the Absolute Maximum Rating System (IEC 60134).

Symbol	Parameter	Conditions	Min	Max	Unit
Per device					
T_j	junction temperature		-	150	°C
T_{amb}	ambient temperature		–55	+150	°C
T_{stg}	storage temperature		–65	+150	°C

© NXP B.V. 2008. All rights reserved.

Table 7. ESD maximum ratings

T_{amb} = 25 °C unless otherwise specified.

Symbol	Parameter	Conditions		Min	Max	Unit
Per diode						
V_{ESD}	electrostatic discharge voltage	IEC 61000-4-2 (contact discharge)	[1]	-	9	kV
		MIL-STD-883 (human body model)		-	10	kV

[1] Device stressed with ten non-repetitive ESD pulses.

Table 8. ESD standards compliance

Standard	Conditions
Per diode	
IEC 61000-4-2; level 4 (ESD)	> 8 kV (contact)
MIL-STD-883; class 3 (human body model)	> 4 kV

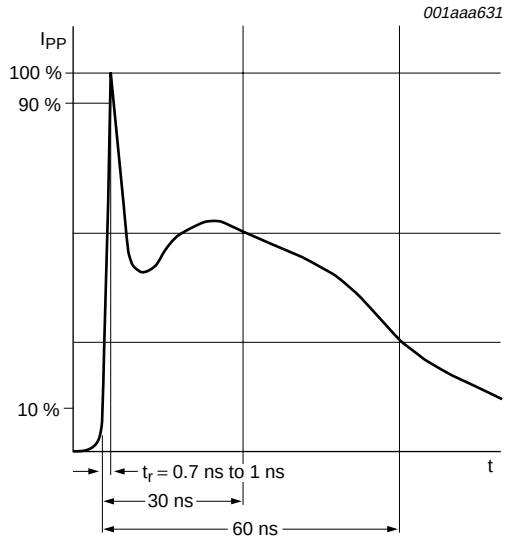

Fig 1. ESD pulse waveform according to IEC 61000-4-2

© NXP B.V. 2008. All rights reserved.

6. Characteristics

Table 9. Characteristics

T_{amb} = 25 °C unless otherwise specified.

Symbol	Parameter	Conditions	Min	Typ	Max	Unit
Per diode						
V_{RWM}	reverse standoff voltage		-	-	5	V
I_{RM}	reverse leakage current	V_{RWM} = 5 V	-	1	100	nA
V_{BR}	breakdown voltage	I_R = 5 mA	6.0	7.5	9.5	V
C_d	diode capacitance	f = 1 MHz				
		V_R = 0 V	-	0.9	1.3	pF
		V_R = 5 V	-	0.8	1.2	pF
r_{dif}	differential resistance	I_R = 1 mA	-	-	100	Ω

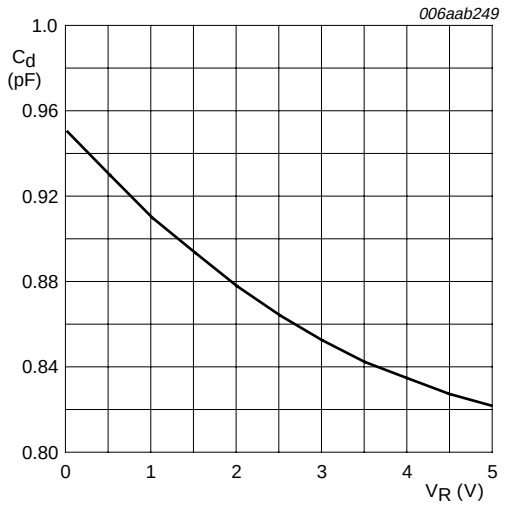

f = 1 MHz; T_{amb} = 25 °C

Fig 2. Diode capacitance as a function of reverse voltage; typical values

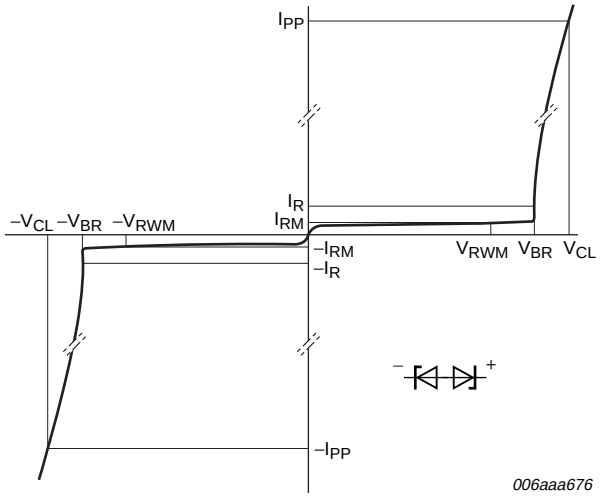

Fig 3. V-I characteristics for a bidirectional ESD protection diode

© NXP B.V. 2008. All rights reserved.

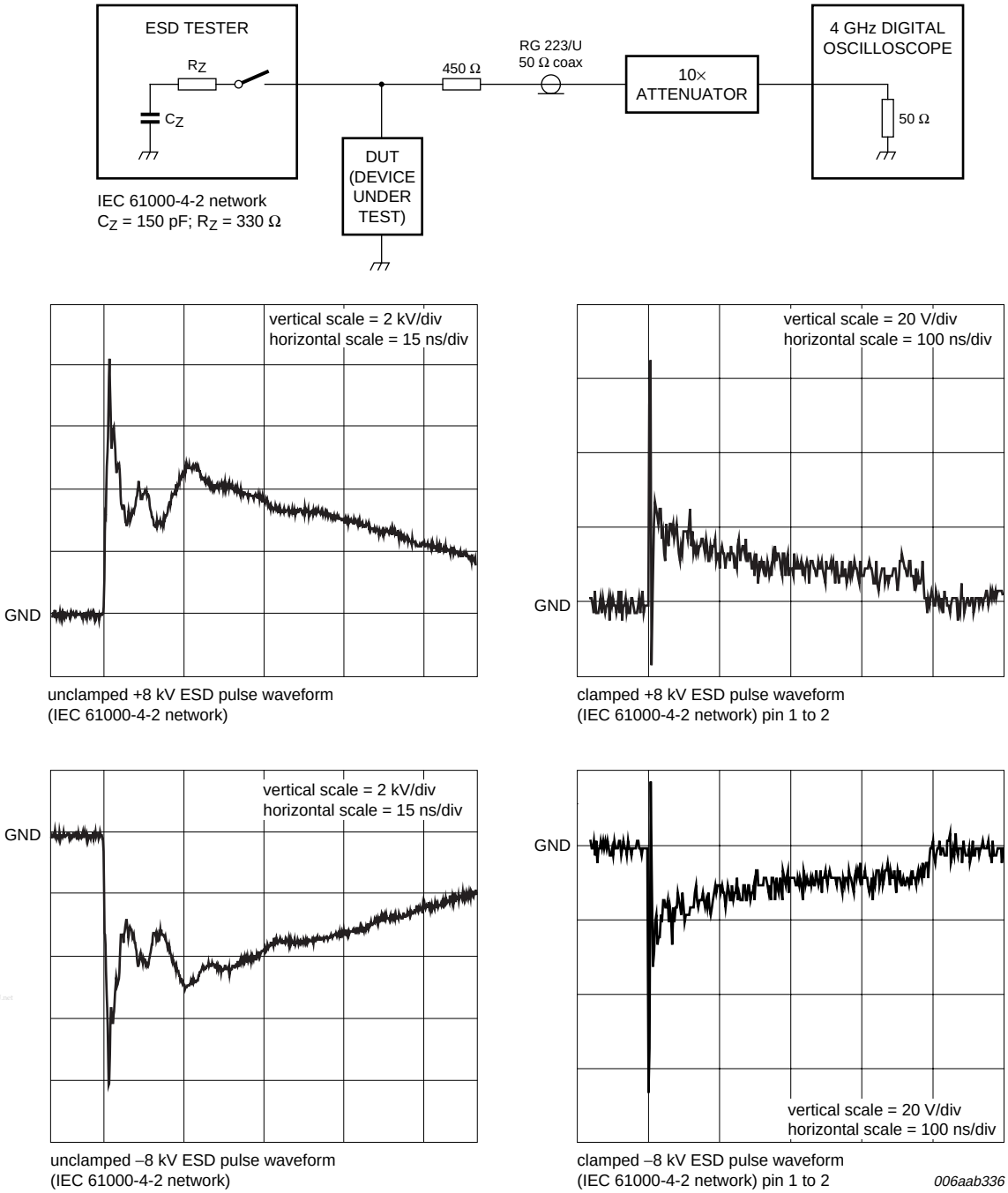

Fig 4. ESD clamping test setup and waveforms

© NXP B.V. 2008. All rights reserved.

7. Application information

PESD5V0X1BA and PESD5V0X1BL are designed for the protection of one bidirectional data or signal line from the damage caused by ESD. The devices may be used on lines where the signal polarities are both, positive and negative with respect to ground.

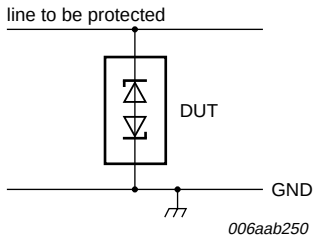

Fig 5. Application diagram

Circuit board layout and protection device placement

Circuit board layout is critical for the suppression of ESD and Electrical Fast Transient (EFT). The following guidelines are recommended:

1. Place the device as close to the input terminal or connector as possible.
2. The path length between the device and the protected line should be minimized.
3. Keep parallel signal paths to a minimum.
4. Avoid running protected conductors in parallel with unprotected conductors.
5. Minimize all Printed-Circuit Board (PCB) conductive loops including power and ground loops.
6. Minimize the length of the transient return path to ground.
7. Avoid using shared transient return paths to a common ground point.
8. Ground planes should be used whenever possible. For multilayer PCBs, use ground vias.

8. Test information

8.1 Quality information

This product has been qualified in accordance with the Automotive Electronics Council (AEC) standard *Q101 - Stress test qualification for discrete semiconductors*, and is suitable for use in automotive applications.

© NXP B.V. 2008. All rights reserved.

9. Package outline

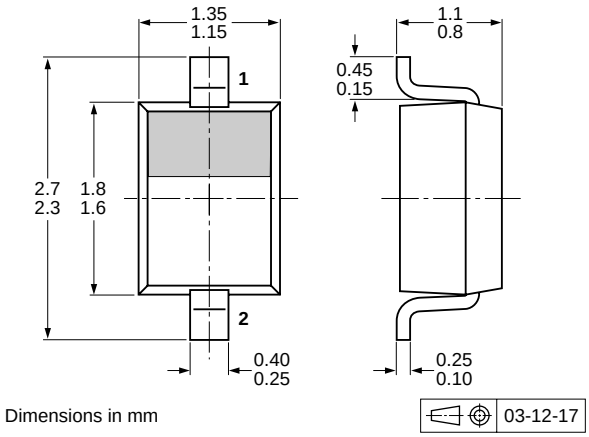

Fig 6. Package outline PESD5V0X1BA (SOD323/SC-76)

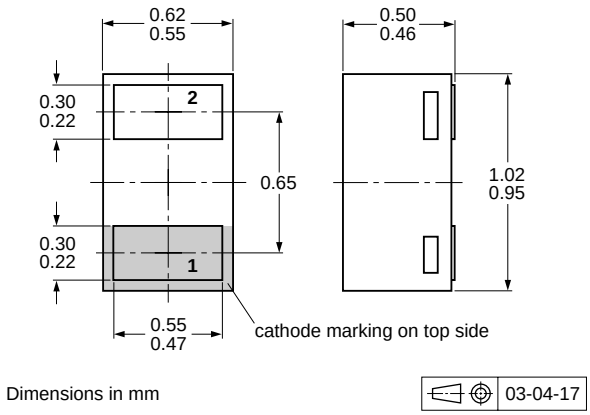

Fig 7. Package outline PESD5V0X1BL (SOD882)

10. Packing information

Table 10. Packing methods

The indicated -xxx are the last three digits of the 12NC ordering code.[1]

Type number	Package	Description	Packing quantity	
			3000	10000
PESD5V0X1BA	SOD323	4 mm pitch, 8 mm tape and reel	-115	-135
PESD5V0X1BL	SOD882	2 mm pitch, 8 mm tape and reel	-	-315

[1] For further information and the availability of packing methods, see Section 14.

www.DataSheet4U.net

© NXP B.V. 2008. All rights reserved.

11. Soldering

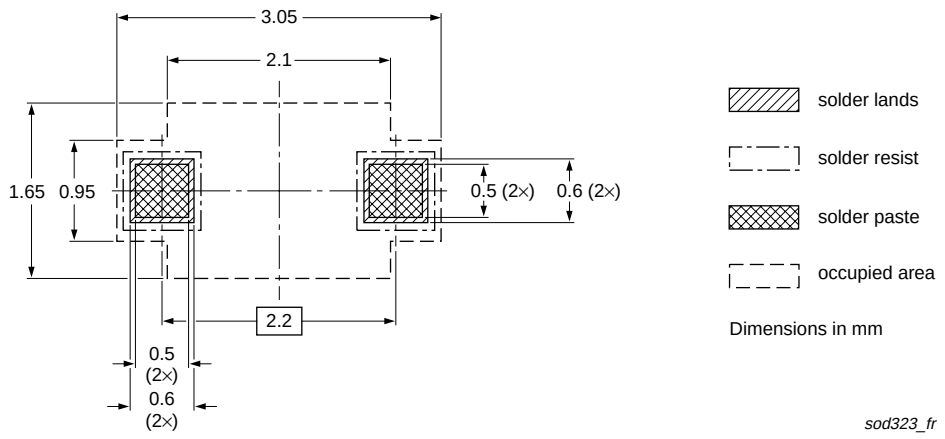

Fig 8. Reflow soldering footprint PESD5V0X1BA (SOD323/SC-76)

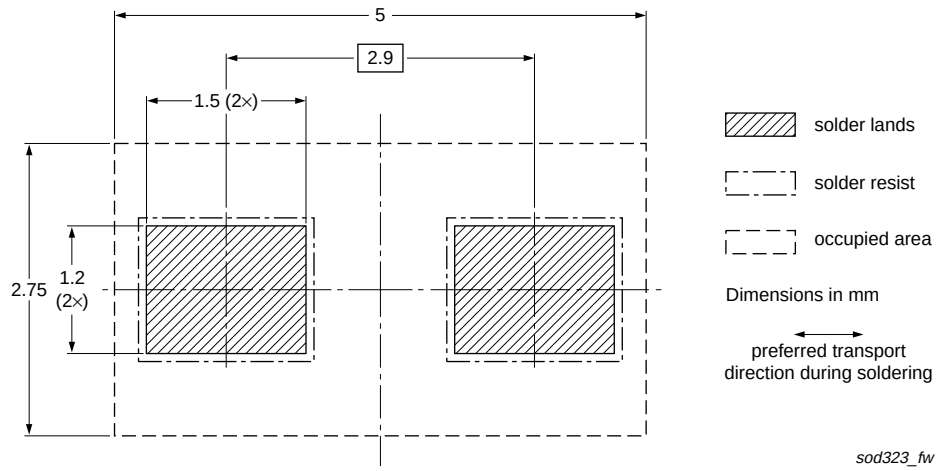

Fig 9. Wave soldering footprint PESD5V0X1BA (SOD323/SC-76)

www.DataSheet4U.net

© NXP B.V. 2008. All rights reserved.

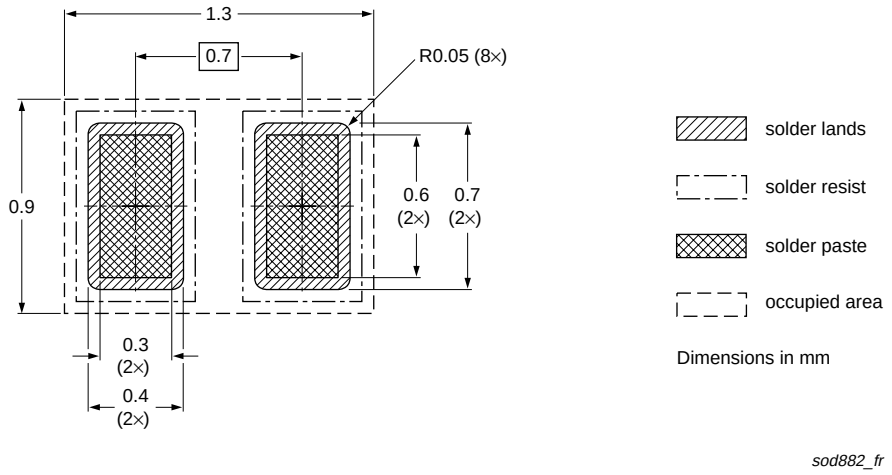

Reflow soldering is the only recommended soldering method.

Fig 10. Reflow soldering footprint PESD5V0X1BL (SOD882)

www.DataSheet4U.net

© NXP B.V. 2008. All rights reserved.

12. Revision history

Table 11. Revision history

Document ID	Release date	Data sheet status	Change notice	Supersedes
PESD5V0X1BA_PESD5V0X1BL_1	20081104	Product data sheet	-	-

www.DataSheet4U.net

© NXP B.V. 2008. All rights reserved.

13. Legal information

13.1 Data sheet status

Document status[1][2]	Product status[3]	Definition
Objective [short] data sheet	Development	This document contains data from the objective specification for product development.
Preliminary [short] data sheet	Qualification	This document contains data from the preliminary specification.
Product [short] data sheet	Production	This document contains the product specification.

[1] Please consult the most recently issued document before initiating or completing a design.

[2] The term 'short data sheet' is explained in section "Definitions".

[3] The product status of device(s) described in this document may have changed since this document was published and may differ in case of multiple devices. The latest product status information is available on the Internet at URL http://www.nxp.com.

13.2 Definitions

Draft — The document is a draft version only. The content is still under internal review and subject to formal approval, which may result in modifications or additions. NXP Semiconductors does not give any representations or warranties as to the accuracy or completeness of information included herein and shall have no liability for the consequences of use of such information.

Short data sheet — A short data sheet is an extract from a full data sheet with the same product type number(s) and title. A short data sheet is intended for quick reference only and should not be relied upon to contain detailed and full information. For detailed and full information see the relevant full data sheet, which is available on request via the local NXP Semiconductors sales office. In case of any inconsistency or conflict with the short data sheet, the full data sheet shall prevail.

13.3 Disclaimers

General — Information in this document is believed to be accurate and reliable. However, NXP Semiconductors does not give any representations or warranties, expressed or implied, as to the accuracy or completeness of such information and shall have no liability for the consequences of use of such information.

Right to make changes — NXP Semiconductors reserves the right to make changes to information published in this document, including without limitation specifications and product descriptions, at any time and without notice. This document supersedes and replaces all information supplied prior to the publication hereof.

Suitability for use — NXP Semiconductors products are not designed, authorized or warranted to be suitable for use in medical, military, aircraft, space or life support equipment, nor in applications where failure or malfunction of an NXP Semiconductors product can reasonably be expected to result in personal injury, death or severe property or environmental damage. NXP Semiconductors accepts no liability for inclusion and/or use of NXP Semiconductors products in such equipment or applications and therefore such inclusion and/or use is at the customer's own risk.

Applications — Applications that are described herein for any of these products are for illustrative purposes only. NXP Semiconductors makes no representation or warranty that such applications will be suitable for the specified use without further testing or modification.

Limiting values — Stress above one or more limiting values (as defined in the Absolute Maximum Ratings System of IEC 60134) may cause permanent damage to the device. Limiting values are stress ratings only and operation of the device at these or any other conditions above those given in the Characteristics sections of this document is not implied. Exposure to limiting values for extended periods may affect device reliability.

Terms and conditions of sale — NXP Semiconductors products are sold subject to the general terms and conditions of commercial sale, as published at http://www.nxp.com/profile/terms, including those pertaining to warranty, intellectual property rights infringement and limitation of liability, unless explicitly otherwise agreed to in writing by NXP Semiconductors. In case of any inconsistency or conflict between information in this document and such terms and conditions, the latter will prevail.

No offer to sell or license — Nothing in this document may be interpreted or construed as an offer to sell products that is open for acceptance or the grant, conveyance or implication of any license under any copyrights, patents or other industrial or intellectual property rights.

Quick reference data — The Quick reference data is an extract of the product data given in the Limiting values and Characteristics sections of this document, and as such is not complete, exhaustive or legally binding.

ESD protection devices — These products are only intended for protection against ElectroStatic Discharge (ESD) pulses and are not intended for any other usage including, without limitation, voltage regulation applications. NXP Semiconductors accepts no liability for use in such applications and therefore such use is at the customer's own risk.

13.4 Trademarks

Notice: All referenced brands, product names, service names and trademarks are the property of their respective owners.

14. Contact information

For more information, please visit: **http://www.nxp.com**

For sales office addresses, please send an email to: **salesaddresses@nxp.com**

© NXP B.V. 2008. All rights reserved.

15. Contents

1 Product profile 1
1.1 General description. 1
1.2 Features 1
1.3 Applications 1
1.4 Quick reference data. 1
2 Pinning information 2
3 Ordering information 2
4 Marking 2
5 Limiting values 2
6 Characteristics 4
7 Application information. 6
8 Test information 6
8.1 Quality information 6
9 Package outline 7
10 Packing information. 7
11 Soldering 8
12 Revision history 10
13 Legal information 11
13.1 Data sheet status 11
13.2 Definitions 11
13.3 Disclaimers 11
13.4 Trademarks 11
14 Contact information 11
15 Contents 12

www.DataSheet4U.net

Please be aware that important notices concerning this document and the product(s) described herein, have been included in section 'Legal information'.

founded by

PHILIPS

© NXP B.V. 2008. All rights reserved.

For more information, please visit: http://www.nxp.com
For sales office addresses, please send an email to: salesaddresses@nxp.com

Date of release: 4 November 2008

Document identifier: PESD5V0X1BA_PESD5V0X1BL_1