MT6228 GSM/GPRS Baseband Processor Data Sheet

Revision 1.02

September 09, 2005

MTK Confidential Release for Konka

1. System Overview

MT6228 is a feature-rich and extremely powerful single-chip solution for high-end GSM/GPRS mobile phones. Based on the 32-bit ARM7EJ-S™ RISC processor, MT6228's superb processing power, along with high bandwidth architecture and dedicated hardware support, provides an unprecedented platform for high performance GPRS Class 12 MODEM and leading-edge multimedia applications. Overall, MT6228 presents a revolutionary platform for multimedia-centric mobile devices.

Typical application diagram is shown in **Figure** 1.

Platform

MT6228 is capable of running the ARM7EJ-S™ RISC processor at up to 104 MHz, thus providing fast data processing capabilities. In addition to the high clock frequency, separate CODE and DATA caches are also added to further improve the overall system efficiency.

For large amounts of data transfer, high performance DMA (Direct Memory Access) with hardware flow control is implemented, which greatly enhances the data movement speed while reducing MCU processing load.

Targeted as a media-rich platform for mobile applications, MT6228 also provides hardware security digital rights management for copyright protection. For further safeguarding, and to protect the manufacturer's development investment, hardware flash content protection is provided to prevent unauthorized porting of the software load.

Memory

To provide the greatest capacity for expansion and maximum bandwidth for data intensive applications such as multimedia features, MT6228 supports up to 4 external state-of-the-art devices through its 8/16-bit host interface. High performance devices such as Mobile RAM and Cellular RAM are supported for maximum bandwidth. Traditional devices such as burst/page mode flash, page mode SRAM, and Pseudo SRAM are also supported. For greatest compatibility, the memory interface can also be used to connect to legacy devices such as Color/Parallel LCD, and multi-media companion chips are all supported through this interface. To minimize power consumption and ensure low noise, this interface is designed for flexible I/O voltage and allows lowering of the supply voltage down to 1.8V. The driving strength is configurable for signal integrity adjustment. The data bus also employs retention technology to prevent the bus from floating during a turn over.

Multi-media

The MT6228 multi-media subsystem provides a connection to a CMOS image sensor and supports a resolution up to 3Mpixels. With its advanced image signal and data processing technology, MT6228 allows efficient processing of image and video data. Built-in JPEG CODEC and MPEG-4 CODEC enable real-time recording and playback of high-quality images and video. A hardware MPEG4 accelerator supports playback in VGA mode at 15fps and encoding in CIF at 15fps. Videophone functionality is also provided. Moreover, a high quality de-blocking filter is removes blocking artifacts in video playback. GIF and PNG decoders are implemented for fast image decoding. MT6228 supports a TV-OUT capability, allowing the mobile handset to connect to a TV screen via an NTSC or PAL connection.

In addition to advanced image and video features, MT6228 utilizes high resolution DAC, digital audio, and audio synthesis technology to provide superior audio features for all future multi-media needs.

Connectivity and Storage

To take advantage of its incredible multimedia strengths, MT6228 incorporates myriads of advanced connectivity and storage options for data storage and communication. MT6228 supports UART, Fast IrDA, USB 1.1 Full Speed OTG, SDIO, Bluetooth and WIFI Interface, and MMC/SD/MS/MS Pro storage systems. These interfaces provide MT6228 users with the highest degree of flexibility in implementing solutions suitable for the targeted application.

MTK Confidential Release for Konka

To achieve a complete user interface, MT6228 also brings together all the necessary peripheral blocks for a multi-media GSM/GPRS phone. The peripheral blocks include the Keypad Scanner with the capability to detect multiple key presses, SIM Controller, Alerter, Real Time Clock, PWM, Serial LCD Controller, and General Purpose Programmable I/Os.

Furthermore, to provide more better configurability and bandwidth for multi-media products, an additional 18-bit parallel interface is incorporated. This interface enables connection to LCD panels as well as NAND flash devices for additional multi-media data storage.

Audio

Using a highly integrated mixed-signal Audio Front-End, the MT6228 architecture allows for easy audio interfacing with direct connection to the audio transducers. The audio interface integrates D/A and A/D Converters for Voice band, as well as high resolution Stereo D/A Converters for Audio band. In addition, MT6228 also provides Stereo Input and Analog MUX.

MT6228 supports AMR codec to adaptively optimize speech and audio quality. Moreover, HE-AAC codec is implemented to deliver CD-quality audio at low bit rates.

On the whole, MT6228's audio features provide a rich solution for multi-media applications.

Radio

MT6228 integrates a mixed-signal baseband front-end in order to provide a well-organized radio interface with flexibility for efficient customization. The front-end contains gain and offset calibration mechanisms, and filters with programmable coefficients for comprehensive compatibility control on RF modules. This approach allows the usage of a high resolution D/A Converter for controlling VCXO or crystal, reducing the need for an expensive TCVCXO. MT6228 achieves great MODEM performance by utilizing a 14-bit high resolution A/D Converter in the RF downlink path. Furthermore, to reduce the need for extra external current-driving component, the driving strength of some BPI outputs is designed to be configurable.

Debug Function

The JTAG interface enables in-circuit debugging of the software program with the ARM7EJ-S core. With this standardized debugging interface, MT6228 provides developers with a wide set of options in choosing ARM development kits from different third party vendors.

Power Management

The MT6228 offers various low-power features to help reduce system power consumption. These features include a Pause Mode of 32 KHz clocking in Standby State, Power Down Mode for individual peripherals, and Processor Sleep Mode. MT6228 is also fabricated in an advanced low leakage CMOS process, hence providing an overall ultra low leakage solution.

Package

The MT6228 device is offered in a 13mm×13mm, 314-ball, 0.65 mm pitch, TFBGA package.

MTK Confidential Release for Konka

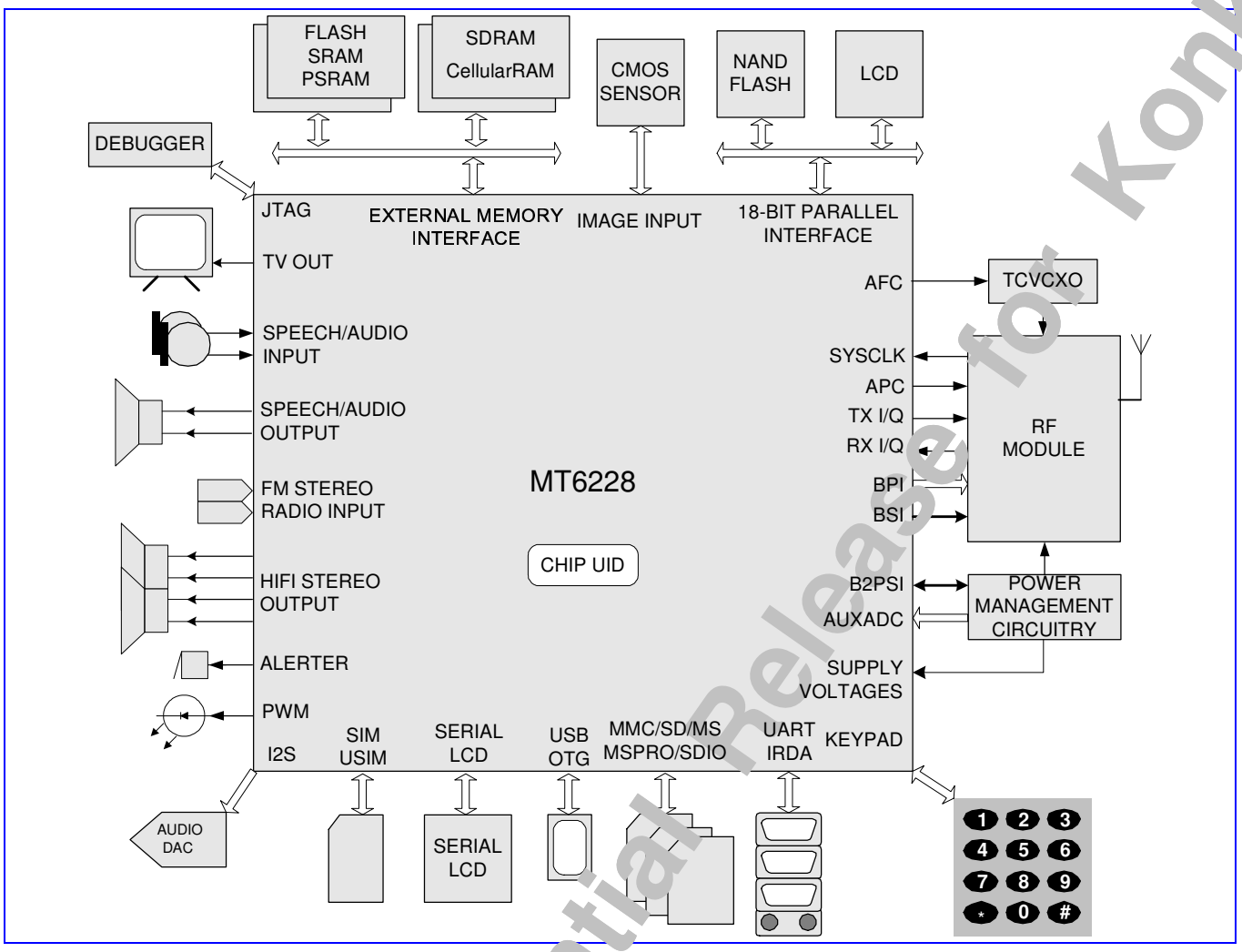

Figure 1 Typical application of MT6228

MTK Confidential Release for Konka

1.1 Platform Features

- **General**
  - Integrated voice-band, audio-band and base-band analog front ends
  - TFBGA 13mm×13mm, 314-ball, 0.65 mm pitch package
- **MCU Subsystem**
  - ARM7EJ-S 32-bit RISC processor
  - High performance multi-layer AMBA bus
  - Java hardware acceleration for fast Java-based games and applets
  - Operating frequency: 26/52/104 MHz
  - Dedicated DMA bus
  - 14 DMA channels
  - 1M bits on-chip SRAM
  - 1M bits MCU dedicated Tightly Coupled memory
  - 256K bits CODE cache
  - 64K bits DATA cache
  - On-chip boot ROM for Factory Flash Programming
  - Watchdog timer for system crash recovery
  - 3 sets of General Purpose Timer
  - Circuit Switch Data coprocessor
  - Division coprocessor
  - PPP Framer coprocessor
- **External Memory Interface**
  - Supports up to 4 external devices
  - Supports 8-bit or 16-bit memory components with maximum size of up to 64M Bytes each
  - Supports Mobile RAM and Cellular RAM
  - Supports Flash and SRAM/PSRAM with page mode or burst mode
  - Industry standard Parallel LCD interface
  - Supports multi-media companion chips with 8/16 bits data width
  - Flexible I/O voltage of 1.8V ~ 2.8V for memory interface
  - Configurable driving strength for memory interface
- **User Interfaces**
  - 6-row × 7-column keypad controller with hardware scanner
  - Supports multiple key presses for gaming
  - SIM/USIM controller with hardware T=0/T=1 protocol control
  - Real Time Clock (RTC) operating with a separate power supply
  - General Purpose I/Os (GPIOs)
  - 2 sets of Pulse Width Modulation (PWM) output
  - Alerter output with Enhanced PWM or PDM
  - 8 external interrupt lines
- **Security**
  - Cipher: supports AES, DES/3DES
  - Hash: supports MD5, SHA-1
  - Supports security key and 27 bit chip unique ID
- **Connectivity**
  - 3 UARTs with hardware flow control and speeds up to 921600 bps
  - IrDA modulator/demodulator with hardware framer. Supports SIR/MIR/FIR operating speeds.
  - Full-speed USB 1.1 OTG capability. Supports device mode, limited host mode, and dual-role OTG mode.

MTK Confidential Release for Konka

- Multi Media Card, Secure Digital Memory Card, Memory Stick, Memory Stick Pro host controller with flexible I/O voltage power
- Supports SDIO interface for SDIO peripherals as well as WIFI connectivity
- DAI/PCM and I2S interface for Audio application

■ **Power Management**

- Power Down Mode for analog and digital circuits
- Processor Sleep Mode
- Pause Mode of 32 KHz clocking in Standby State
- 7-channel Auxiliary 10-bit A/D Converter for charger and battery monitoring and photo sensing

■ **Test and Debug**

- Built-in digital and analog loop back modes for both Audio and Baseband Front-End
- DAI port complying with GSM Rec.11.10
- JTAG port for debugging embedded MCU

MTK Confidential Release for Konka

1.2 MODEM Features

- **Radio Interface and Baseband Front End**
  - GMSK modulator with analog I and Q channel outputs
  - 10-bit D/A Converter for uplink baseband I and Q signals
  - 14-bit high resolution A/D Converter for downlink baseband I and Q signals
  - Calibration mechanism of offset and gain mismatch for baseband A/D Converter and D/A Converter
  - 10-bit D/A Converter for Automatic Power Control
  - 13-bit high resolution D/A Converter for Automatic Frequency Control
  - Programmable Radio RX filter
  - 2 channels Baseband Serial Interface (BSI) with 3-wire control
  - Bi-directional BSI interface. RF chip register read access with 3-wire or 4-wire interface.
  - 10-Pin Baseband Parallel Interface (BPI) with programmable driving strength
  - Multi-band support
- **Voice and Modem CODEC**
  - Dial tone generation
  - Voice memo
  - Noise reduction
  - Echo suppression
  - Advanced sidetone Oscillation Reduction
  - Digital sidetone generator with programmable gain
  - Two programmable acoustic compensation filters
  - GSM/GPRS quad vocoders for adaptive multirate (AMR), enhanced full rate (EFR), full rate (FR) and half rate (HR)
  - GSM channel coding, equalization and A5/1 and A5/2 ciphering
  - GPRS GEA1 and GEA2 ciphering
  - Programmable GSM/GPRS modem
  - Packet Switched Data with CS1/CS2/CS3/CS4 coding schemes
  - GSM Circuit Switch Data
  - GPRS Class 12
- **Voice Interface and Voice Front End**
  - Two microphone inputs sharing one low noise amplifier with programmable gain and automatic gain control (AGC) mechanisms
  - Voice power amplifier with programmable gain
  - 2nd order Sigma-Delta A/D Converter for voice uplink path
  - D/A Converter for voice downlink path
  - Supports half-duplex hands-free operation
  - Compliant with GSM 03.50

MTK Confidential Release for Konka

1.3 Multi-Media Features

- **LCD/NAND Flash Interface**
  - Dedicated Parallel Interface supports 3 external devices with 8-/16-bit NAND flash interface, 8-/9-/16-/18-bit Parallel interface, and Serial interface for LCM
  - Built-in NAND Flash Controller with 1-bit ECC for mass storage
- **LCD Controller**
  - Supports simultaneous connection to up to 3 parallel LCD and 2 serial LCD modules
  - Supports LCM format: RGB332, RGB444, RGB565, RGB666, RGB888
  - Supports LCD module with maximum resolution up to 800x600 at 24bpp
  - Per pixel alpha channel
  - True color engine
  - Supports hardware display rotation
  - Capable of combining display memories with up to 6 blending layers
- **Image Signal Processor**
  - 8/10 bit Bayer format image input
  - Capable of processing image of size up to 3M pixels
  - Color correction matrix
  - Gamma correction
  - Automatic exposure (AE) control
  - Automatic white balance (AWB) control
  - Programmable AE/AWB windows
  - Edge enhancement support
  - Histogram equalization logic
  - Horizontal and vertical sync information on separate pins
  - Shading compensation
  - Defect Pixel compensation
- **Graphic Compression**
  - GIF Decoder
  - PNG Decoder
- **JPEG Decoder**
  - ISO/IEC 10918-1 JPEG Baseline and Progressive modes
  - Supports all possible YUV formats, including grayscale format
  - Supports all DC/AC Huffman table parsing
  - Supports all quantization table parsing
  - Supports a restart interval
  - Supports SOS, DHT, DQT and DRI marker parsing
  - IEEE Std 1180-1990 IDCT standards compliance
  - Supports progressive image processing to minimize storage space requirement
  - Supports reload-able DMA for VLD stream
- **JPEG Encoder**
  - ISO/IEC 10918-1 JPEG baseline mode
  - ISO/IEC 10918-2 compliance
  - Supports YUV422 and YUV420 and grayscale formats
  - Supports JFIF
  - Standard DC and AC Huffman tables
  - Provides 4 levels of encode quality
  - Supports continuous shooting
- **Image Data Processing**
  - Supports Digital Zoom

MTK Confidential Release for Konka

- Supports RGB888/565, YUV444 image processing
- High throughput hardware scaler. Capable of tailoring an image to an arbitrary size.
- Horizontal scaling in averaging method
- Vertical scaling in bilinear method
- Simultaneous scaling for MPEG-4 encode and LCD display
- YUV and RGB color space conversion
- Pixel format transform
- Boundary padding
- Pixel processing: hue/saturation/intensity/color adjustment, Gamma correction and grayscale/invert/sepia-tone effects
- Programmable spatial filtering: linear filter, non-linear filter and multi-pass artistic effects
- Hardware accelerated image editing
- Photo frame capability
- RGB thumbnail data output

■ **MPEG-4/H.263 CODEC**

- Hardware Video CODEC
- ISO/IEC 14496-2 simple profile:

  decode @ level 0/1/2/3

  encode @ level 0
- ITU-T H.263 profile 0 @ level 10
- Max decode speed is VGA @ 15fps
- Max encode speed is CIF @ 15fps
- Support VGA mode encoding
- Horizontal and vertical de-blocking filter in video playback
- Encoder resync marker and HEC
- Supported visual tools for decoder: I-VOP, P-VOP, AC/DC Prediction, 4-MV, Unrestricted MV, Error Resilience, Short Header
- Error Resilience for decoder: Slice Resynchronization, Data Partitioning, Reversible VLC
- Supported visual tools for encoder: I-VOP, P-VOP, Half-Pel, DC Prediction, Unrestricted MV, Reversible VLC, Short Header
- Supports encoding motion vector of range up to –64/+63.5 pixels
- HE-AAC decode support
- AAC/AMR/WB-AMR audio decode support
- AMR/WB-AMR audio encode support

■ **TV-OUT**

- Supports NTSC/PAL formats (interlaced mode)
- 10 bit video DAC with 2x oversampling
- Supports one composite video output

■ **2D Accelerator**

- Supports 32-bpp ARGB8888, 24-bpp RGB888, 16-bpp RGB565, and 8-bpp index color modes
- Supports SVG Tiny
- Rectangle gradient fill
- BitBlt: multi-BitBlt with 7 rotation, 16 binary ROP
- Alpha blending with 7 rotation
- Line drawing: normal line, dotted line, anti-aliasing
- Circle drawing
- Bezier curve drawing
- Triangle flat fill
- Font caching: normal font, italic font
- Command queue with max depth of 2047

■ **Audio CODEC**

- Supports HE-AAC codec decode
- Supports AAC codec decode
- Wavetable synthesis with up to 64 tones

MTK Confidential Release for Konka

- Advanced wavetable synthesizer capable of generating simulated stereo
- Wavetable including GM full set of 128 instruments and 47 sets of percussions
- PCM Playback and Record
- Digital Audio Playback

- **Audio Interface and Audio Front End**
  - Supports I2S interface
  - High resolution D/A Converters for Stereo Audio playback
  - Stereo analog input for stereo audio source
  - Analog multiplexer for stereo audio
  - Stereo to mono conversion

MTK Confidential Release for Konka

1.4 General Description

Figure 2 depicts the block diagram of MT6228. Based on a dual-processor architecture, MT6228 integrates both an ARM7EJ-S core and a digital signal processor core. ARM7EJ-S is the main processor responsible for running high-level GSM/GPRS protocol software as well as multi-media applications. The digital signal processor manages the low-level MODEM as well as advanced audio functions. Except for a few mixed-signal circuitries, the other building blocks in MT6228 are connected to either the microcontroller or the digital signal processor.

MT6228 consists of the following subsystems:

- Microcontroller Unit (MCU) Subsystem: includes an ARM7EJ-S RISC processor and its accompanying memory management and interrupt handling logics;
- Digital Signal Processor (DSP) Subsystem: includes a DSP and its accompanying memory, memory controller, and interrupt controller;
- MCU/DSP Interface: the junction at which the MCU and the DSP exchange hardware and software information;
- Microcontroller Peripherals: includes all user interface modules and RF control interface modules;
- Microcontroller Coprocessors: runs computing-intensive processes in place of the Microcontroller;
- DSP Peripherals: hardware accelerators for GSM/GPRS channel codec;
- Multi-media Subsystem: integrates several advanced accelerators to support multi-media applications;
- Voice Front End: the data path for converting analog speech to and from digital speech;
- Audio Front End: the data path for converting stereo audio from an audio source;
- Video Front End: the data path for converting a video signal to NTSL/PAL format;
- Baseband Front End: the data path for converting a digital signal to and from an analog signal from the RF modules;
- Timing Generator: generates the control signals related to the TDMA frame timing; and,
- Power, Reset and Clock Subsystem: manages the power, reset, and clock distribution inside MT6228.

Details of the individual subsystems and blocks are described in the following chapters.

MTK Confidential Release for Konka

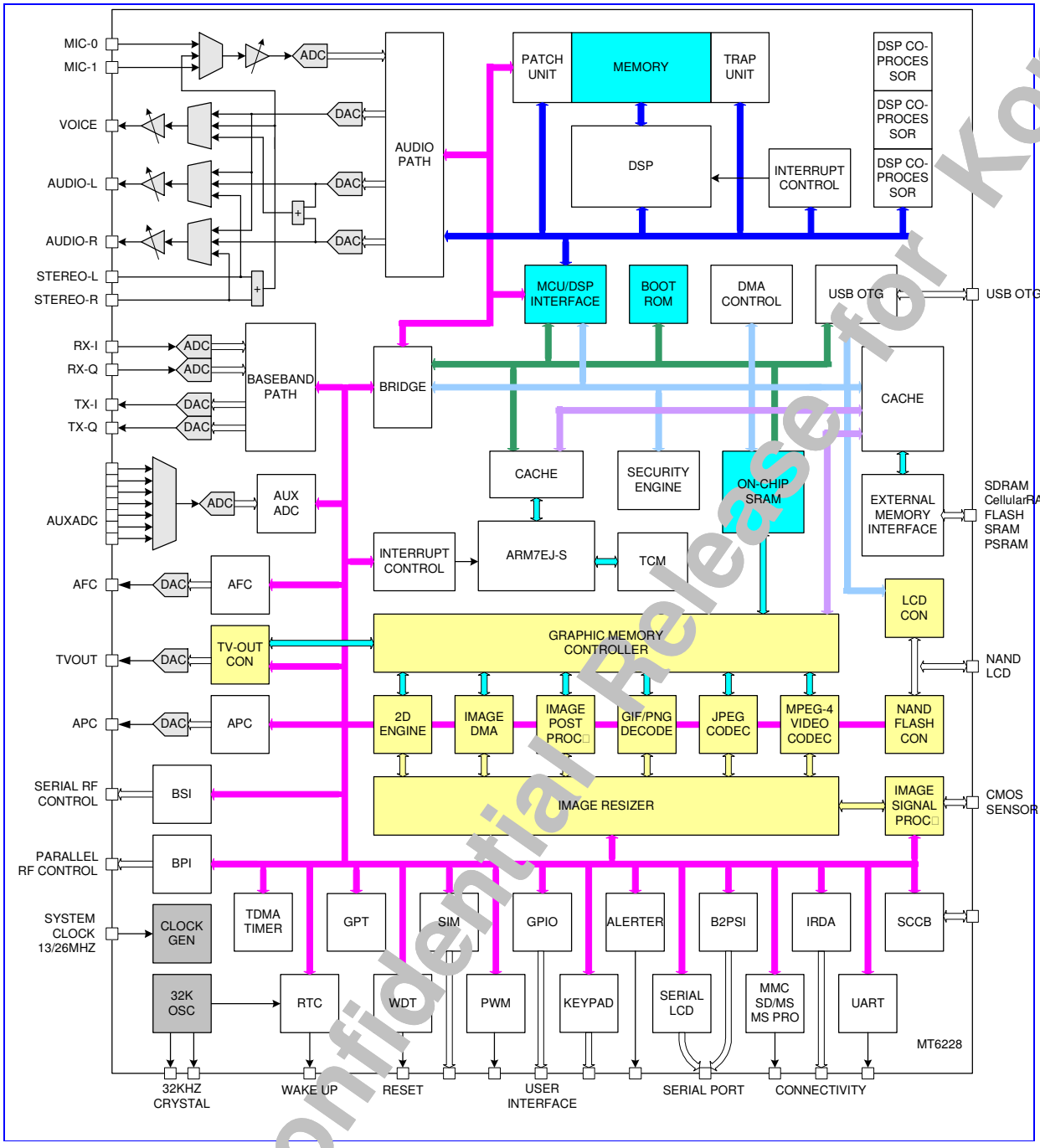

Figure 2 MT6228 block diagram.

MTK Confidential Release for Konka

2 Product Description

2.1 Pin Outs

One type of package for this product, TFBGA 13mm*13mm, 314-ball, 0.65 mm pitch Package, is offered.

Pin-outs and the top view are illustrated in **Figure 3** for this package. Outline and dimension of package is illustrated in **Figure 4**, while the definition of package is shown in **Table 1**.

MTK Confidential Release for Konka

	1	2	3	4	5	6	7	8	9	10	11	12	13	14	15	16	17	18	19	
A	AVDD_PLL	TVOUT	VSS33	AFC_BYP	AUXADIN6	AUXADIN3	AVDD_RFE	BUPAIN	BDLAIN	AU_VIN1_P	AGND_AFE	AU_OUT0_P	AVSS_BUF	AU_FMINR	AU_MOUTR	VSS33	GPIO9	GPIO8	GPIO6	A
B	SYSCLK	AVDD_TV	VDD33	AFC	AUXADIN5	AUXADIN2	APC	BUPAIP	BDLAIP	AU_VIN1_N	AU_VREF_P	AU_OUT0_N	AVDD_BUF	AU_FMINL	AU_MOUTL	VSS33	MFIQ	GPIO7	VDD33	B
C	AVSS_PLL	FRES	AVSS_TV	AUX_REF	AUXADIN4	AUXADIN1	AVSS_RFE	BUPAQN	BDLAQN	AU_VIN0_N	AU_VREF_N	AU_MICBIAS_P	AU_OUT1_N	AU_M_BYP	AVDD_MBUF	NC	GPIO5	GPIO4	GPIO3	C
D	XIN	XOUT	AVDD_RTC	VDD33	VSS33	AUXADIN0	AVDD_GSMRFTX	BUPAQP	BDLAQP	AU_VIN0_P	AVDD_AFE	AU_MICBIAS_N	AU_OUT1_P	AVSS_MBUF	ESDM_CK	DAIPCMIN	GPIO2	DAISYNC	DAIRST	D
E	BBWAKEUP	VSS33	VDDK	JTRST#	TESTMODE	VDD33	VSS33	AVSS_GSMRFTX	AGND_RFE	AVSS_AFE	VDD33	VSS33	VDD33	VSS33	VDD33	KROW1	KROW0	DAICLK	DAIPCMOUT	E
F	JRTCK	JTDO	JTMS	JTDI	JTCK	PLLOUT			VDD33	VSS33	VDDK				KROW4	KROW3	KROW2	VDDK	VSS33	F
G	BPI_BUS3	VDD33	BPI_BUS2	BPI_BUS1	BPI_BUS0		NLD17								KCOL3	KCOL2	KCOL1	KCOL0	KROW5	G
H	VSS33	BPI_BUS8	BPI_BUS7	BPI_BUS6	BPI_BUS5			CMDAT9	CMPCLK	CMMCLK	CMHREF	CMVREF			IRDA_TXD	IRDA_PDN	KCOL6	KCOL5	KCOL4	H
J	LSCK	BSI_CLK	BSI_DATA	BSI_CS0	BPI_BUS9	BPI_BUS4		CMDAT8	NLD16	NLD14	NLD11	CMRST			UTXD2	URXD3	UTXD3	VDD33	IRDA_RXD	J
K	VDD33	LSCE1#	LSCE0#	LSDA	LSA0	LPCE1#		CMDAT7	NLD15	NLD12	NLD9	CMPDN			URXD1	UTXD1	UCTS1	URTS1	URXD2	K
L	LWR#	LPA0	LRD#	LRST#	LPCE0#	NLD7		CMDAT6	NLD13	NLD10	NLD8	CMDAT0			VSS33	SIMCLK	SIMVCC	SIMSEL	SIMDATA	L
M	VSS33	VDDK	NLD4	NLD5	NLD6			CMDAT5	CMDAT4	CMDAT3	CMDAT2	CMDAT1				MCWP	MCINS	MCCK	SIMRST	M
N	NRNB	NLD0	NLD1	NLD2	NLD3											VDD33_AUX1	MCDA2	MCDA3	MCPWRON	N
P	NCE#	NRE#	NWE#	NALE	NCLE			EA11		EA0	ECS2#	ERD#			VDDK	VDD33_AUX2	MCCM0	MCDA0	MCDA1	P
R	VDD33	ALERTER	PWM2	PWM1	EA19	VSS33_EMI	EA12	EA8	EA4	VDD33_EMI	ECS3#	VSS33_EMI	ECKE	EWAIT	ED0	WATCHDOG	VSS33_EMI	USB_DP	USB_DM	R
T	SRCLKENAN	SYSRST#	SRCLKENAI	SRCLKENA	EA20	EA16	VDD33_EMI	EA9	EA5	EA1	EPDN#	EWR#	EDCLK	ECAS#	ED13	ED10	VDD33_EMI	ED2	ED1	T
U	GPIO1	EINT0	GPIO0	MIRQ	EA21	EA17	EA13	VSS33_EMI	EA6	EA2	VSS33_EMI	ECS0#	VDD33_EMI	VSS33_EMI	ED14	ED11	ED8	ED4	ED3	U
V	EINT1	EINT3	VDD33_EMI	EA24	EA22	VDD33_EMI	EA14	VDDK	EA7	VSS33_EMI	ECLK	ECS1#	ELB#	VDDK	VDD33_EMI	ED12	VDD33_EMI	VSS33_EMI	ED5	V
W	EINT2	VSS33_EMI	EA25	EA23	VSS33_EMI	EA18	EA15	EA10	VDD33_EMI	EA3	EADV#	VDD33_EMI	EUB#	ERAS#	ED15	VSS33_EMI	ED9	ED7	ED6	W
	1	2	3	4	5	6	7	8	9	10	11	12	13	14	15	16	17	18	19	

MT6228 TFBGA Top-View

Figure 3 Top View of MT6228 TFBGA 13mm*13mm, 314-ball, 0.65 mm pitch Package

MTK Confidential Release for Konka

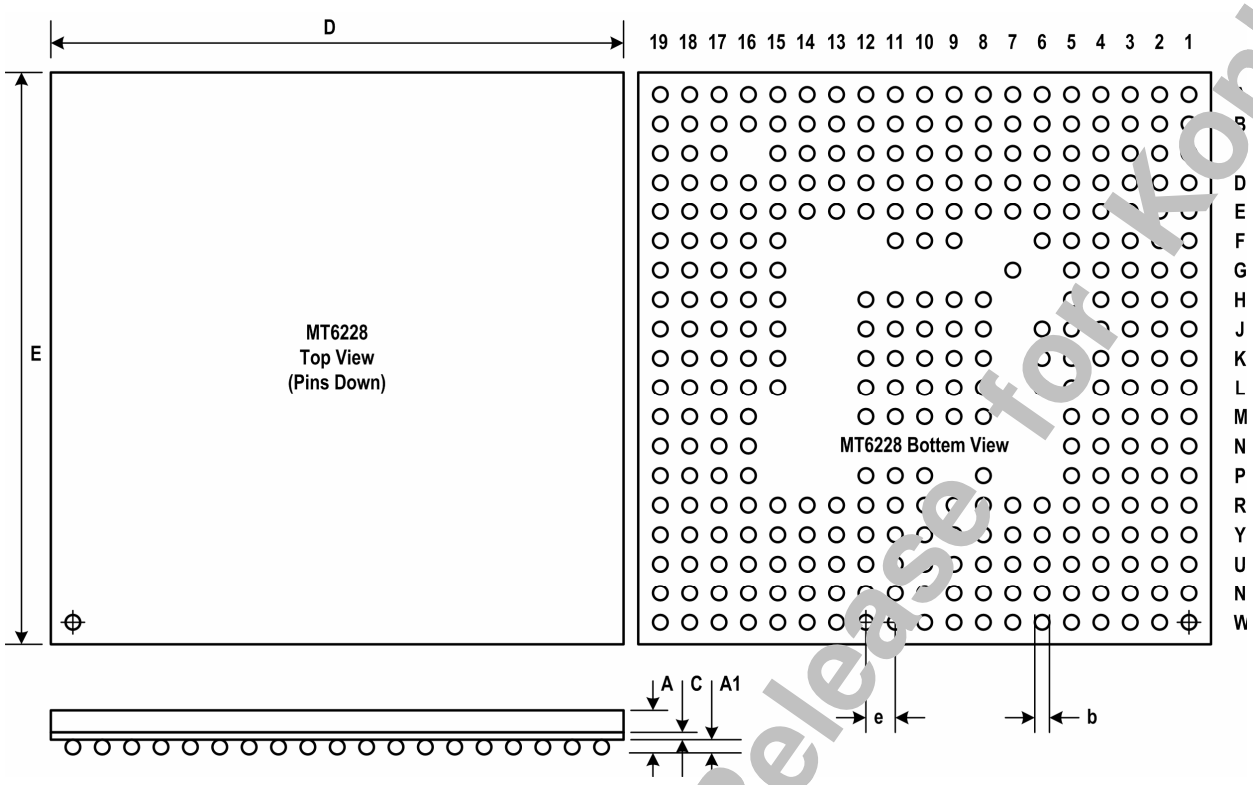

Figure 4 Outlines and Dimension of TFBGA 13mm*13mm, 314-ball, 0.65 mm pitch Package

Body Size		Ball Count	Ball Pitch	Ball Dia.	Package Thk.	Stand Off	Substrate Thk.
D	E	N	E	B	A (Max.)	A1	C
13	13	314	0.65	0.35	1.2	0.3	0.36

Table 1 Definition of TFBGA 13mm*13mm, 314-ball, 0.65 mm pitch Package (Unit: mm)

MTK Confidential Release for Konka

2.2 Top Marking Definition

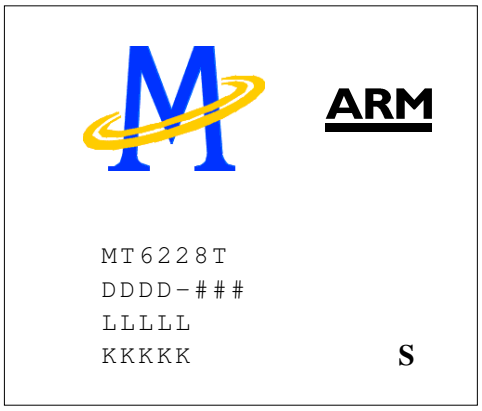

MT6228T: Part No.
DDDD: Date Code
###: Subcontractor Code
LLLLL: U1 Die Lot No.
KKKKK: U2 Die Lot No.
S: Special Code

MTK Confidential Release for Konka

2.3 DC Characteristics

2.3.1 Absolute Maximum Ratings

Prolonged exposure to absolute maximum ratings may reduce device reliability. Functional operation at these maximum ratings is not implied.

Item	Symbol	Min	Max	Unit
IO power supply	VDD33	-0.3	VDD33+0.3	V
I/O input voltage	VDD33I	-0.3	VDD33+0.3	V
Operating temperature	Topr	-20	80	Celsius
Storage temperature	Tstg	-55	125	Celsius

MTK Confidential Release for Konka

2.4 Pin Description

Ball 13X13	Name	Dir	Description	Mode0	Mode1	Mode2	Mode3	PU/PD	Reset
			JTAG Port						
E4	**JTRST#**	I	JTAG test port reset input					PD	Input
F5	**JTCK**	I	JTAG test port clock input					PU	Input
F4	**JTDI**	I	JTAG test port data input					PU	Input
F3	**JTMS**	I	JTAG test port mode switch					PU	Input
F2	**JTDO**	O	JTAG test port data output						0
F1	**JRTCK**	O	JTAG test port returned clock output						0
			RF Parallel Control Unit						
G5	**BPI_BUS0**	O	RF hard-wire control bus 0						0
G4	**BPI_BUS1**	O	RF hard-wire control bus 1						0
G3	**BPI_BUS2**	O	RF hard-wire control bus 2						0
G1	**BPI_BUS3**	O	RF hard-wire control bus 3						0
J6	**BPI_BUS4**	O	RF hard-wire control bus 4						0
H5	**BPI_BUS5**	O	RF hard-wire control bus 5						0
H4	BPI_BUS6	IO	RF hard-wire control bus 6	**GPIO16**	BPI_BUS6			PD	Input
H3	BPI_BUS7	IO	RF hard-wire control bus 7	**GPIO17**	BPI_BUS7	13MHz	26MHz	PD	Input
H2	BPI_BUS8	IO	RF hard-wire control bus 4	**GPIO18**	BPI_BUS8	6.5MHz	32KHz	PD	Input
J5	BPI_BUS9	IO	RF hard-wire control bus 5	**GPIO19**	BPI_BUS9	BSI_CS1	BFEPRBO	PD	Input
			RF Serial Control Unit						
J4	**BSI_CS0**	O	RF 3-wire interface chip select 0						0
J3	**BSI_DATA**	O	RF 3-wire interface data output						0
J2	**BSI_CLK**	O	RF 3-wire interface clock output						0
			PWM Interface						
R4	PWM1	IO	Pulse width modulated signal 1	**GPIO32**	PWM1	TBTXFS	DSP_TID2	PD	Input
R3	PWM2	IO	Pulse width modulated signal 2	**GPIO33**	PWM2	TBRXEN	DSP_TID3	PD	Input
R2	ALERTER	IO	Pulse width modulated signal for buzzer	**GPIO34**	ALERTER	TBRXFS	DSP_TID4	PD	Input
			Serial LCD/PM IC Interface						
J1	LSCK	IO	Serial display interface data output	**GPIO20**	LSCK	TDMA_CK	TBTXEN	PU	Input
K5	LSA0	IO	Serial display interface address output	**GPIO21**	LSA0	TDMA_D1	TDTIRQ	PU	Input
K4	LSDA	IO	Serial display interface clock output	**GPIO22**	LSDA	TDMA_D0	TCTIRQ2	PU	Input
K3	LSCE0#	IO	Serial display interface chip select 0 output	**GPIO23**	LSCE0#	TDMA_FS	TCTIRQ1	PU	Input
K2	LSCE1#	IO	Serial display interface chip select 1 output	**GPIO24**	LSCE1#	LPCE2#	TEVTVAL	PU	Input
			Parallel LCD/NAND-Flash Interface						
K6	LPCE1#	IO	Parallel display interface chip select 1 output	**GPIO25**	LPCE1#	NCE1#	DSP_TID0	PU	Input
L5	**LPCE0#**	O	Parallel display interface chip select 0 output						1
L4	**LRST#**	O	Parallel display interface Reset Signal						1
L3	**LRD#**	O	Parallel display interface Read Strobe						1

MTK Confidential Release for Konka

L2	**LPA0**	O	Parallel display interface address output						1
L1	**LWR#**	O	Parallel display interface Write Strobe						1
G7	NLD17	IO	Parallel LCD/NAND-Flash Data 17	**GPIO11**	NLD17	MCDA4	DSP_TID 1	PD	Input
J9	NLD16	IO	Parallel LCD/NAND-Flash Data 16	**GPIO10**	NLD16	MCDA5	DID	PD	Input
K9	**NLD15**	IO	Parallel LCD/NAND-Flash Data 15	**NLD15**	GPIO61		DIMS	PD	Input
J10	**NLD14**	IO	Parallel LCD/NAND-Flash Data 14	**NLD14**	GPIO60		DICK	PD	Input
L9	**NDL13**	IO	Parallel LCD/NAND-Flash Data 13	**NLD13**	GPIO59		SWDBGP KT	PD	Input
K10	**NLD12**	IO	Parallel LCD/NAND-Flash Data 12	**NLD12**	GPIO58		SWDBG WR	PD	Input
J11	**NLD11**	IO	Parallel LCD/NAND-Flash Data 11	**NLD11**	GPIO57		SWDBGR D	PD	Input
L10	**NLD10**	IO	Parallel LCD/NAND-Flash Data 10	**NLD10**	GPIO56		SWDBGR OE	PD	Input
K11	**NLD9**	IO	Parallel LCD/NAND-Flash Data 9	**NLD9**	GPIO55		SWDBGA 0	PD	Input
L11	**NLD8**	IO	Parallel LCD/NAND-Flash Data 8	**NLD8**	GPIO54		SWDBGA 1	PD	Input
L6	**NLD7**	IO	Parallel LCD/NAND-Flash Data 7					PD	Input
M5	**NLD6**	IO	Parallel LCD/NAND-Flash Data 6					PD	Input
M4	**NLD5**	IO	Parallel LCD/NAND-Flash Data 5					PD	Input
M3	**NLD4**	IO	Parallel LCD/NAND-Flash Data 4					PD	Input
N5	**NLD3**	IO	Parallel LCD/NAND-Flash Data 3					PD	Input
N4	**NLD2**	IO	Parallel LCD/NAND-Flash Data 2					PD	Input
N3	**NLD1**	IO	Parallel LCD/NAND-Flash Data 1					PD	Input
N2	**NLD0**	IO	Parallel LCD/NAND-Flash Data 0					PD	Input
N1	**NRNB**	IO	NAND-Flash Read/Busy Flag	**NRNB**	GPIO26	USBSESS VLD	SWDBGD 2	PU	
P5	**NCLE**	IO	NAND-Flash Command Latch Signal	**NCLE**	GPIO27	USBVBUS VLD	SWDBGD 1	PD	
P4	**NALE**	IO	NAND-Flash Address Latch Signal	**NALE**	GPIO28	USBSESS END	SWDBGD 0	PD	
P3	**NWE#**	IO	NAND-Flash Write Strobe	**NWE#**	GPIO29			PU	
P2	**NRE#**	IO	NAND-Flash Read Strobe	**NRE#**	GPIO30	USBVBUS DSC	SWDBGC K	PU	
P1	**NCE#**	IO	NAND-Flash Chip select output	**NCE#**	GPIO31			PU	
			SIM Card Interface						
M19	**SIMRST**	O	SIM card reset output						0
L16	**SIMCLK**	O	SIM card clock output						0
L17	**SIMVCC**	O	SIM card supply power control						0
L18	SIMSEL	O	SIM card supply power select	**GPIO48**	SIMSEL			PD	Input
L19	**SIMDATA**	IO	SIM card data input/output						0
			Dedicated GPIO Interface						
U3	**GPIO0**	IO	General purpose input/output 0	**GPIO0**	CMFLAS H		DSP_TID 5	PD	Input
U1	**GPIO1**	IO	General purpose input/output 1	**GPIO1**	BSI_RFIN			PD	Input
D17	**GPIO2**	IO	General purpose input/output 2	**GPIO2**	SCL			PU	Input
C19	**GPIO3**	IO	General purpose input/output 3	**GPIO3**	SDA			PU	Input
C18	**GPIO4**	IO	General purpose input/output 4	**GPIO4**	EDICK	URXD2	SWDBGD 7		
C17	**GPIO5**	IO	General purpose input/output 5	**GPIO5**	EDIWS	UTXD2	SWDBGD 6		
A19	**GPIO6**	IO	General purpose input/output 6	**GPIO6**	EDIDAT		SWDBGD		

MTK Confidential Release for Konka

							5		
B18	**GPIO7**	IO	General purpose input/output 7	**GPIO7**		USBVBUS ON	SWDBGD 4		
A18	**GPIO8**	IO	General purpose input/output 19	**GPIO8**	32KHz	USBVBUS CHG	SWDBGF		
A17	**GPIO9**	IO	General purpose input/output 21	**GPIO9**	26MHz	13MHz	SWDBGE		
			Miscellaneous						
T2	**SYSRST#**	I	System reset input active low						Input
R16	**WATCHDO G#**	O	Watchdog reset output						1
T1	**SRCLKENA N**	O	External TCXO enable output active low	GPO1	**SRCLKE NAN**				0
T4	**SRCLKENA**	O	External TCXO enable output active high	GPO0	**SRCLKE NA**				1
T3	SRCLKENAI	IO	External TCXO enable input	**GPIO31**	SRCLKEN AI			PD	Input
E5	**TESTMODE**	I	TESTMODE enable input					PD	Input
D15	**ESDM_CK**	O	Internal Monitor Clock						
			Keypad Interface						
H17	**KCOL6**	I	Keypad column 6					PU	Input
H18	**KCOL5**	I	Keypad column 5					PU	Input
H19	**KCOL4**	I	Keypad column 4					PU	Input
G15	**KCOL3**	I	Keypad column 3					PU	Input
G16	**KCOL2**	I	Keypad column 2					PU	Input
G17	**KCOL1**	I	Keypad column 1					PU	Input
G18	**KCOL0**	I	Keypad column 0					PU	Input
G19	**KROW5**	O	Keypad row 5	**KROW5**	GPIO44	ARM CK	TV CK		0
F15	**KROW4**	O	Keypad row 4	**KROW4**	GPIO45	AHB CK	DSP CK		0
F16	**KROW3**	O	Keypad row 3	**KROW3**	GPIO46	FTV CK	SLOW CK		0
F17	**KROW2**	O	Keypad row 2	**KROW2**	GPIO47	FMCU CK	FUSB CK		0
E16	**KROW1**	O	Keypad row 1						0
E17	**KROW0**	O	Keypad row 0						0
			External Interrupt Interface						
U2	**EINT0**	I	External interrupt 0					PU	Input
V1	**EINT1**	I	External interrupt 1					PU	Input
W1	**EINT2**	I	External interrupt 2					PU	Input
V2	**EINT3**	I	External interrupt 3					PU	Input
U4	MIRQ	I	Interrupt to MCU	**GPIO36**	MIRQ	6.5MHz	32KHz	PU	Input
B17	MFIQ	I	Interrupt to MCU	**GPIO63**	MFIQ	USBID	SWDBGD 3	PU	Input
			External Memory Interface						
R15	**ED0**	IO	External memory data bus 0						Input
T19	**ED1**	IO	External memory data bus 1						Input
T18	**ED2**	IO	External memory data bus 2						Input
U19	**ED3**	IO	External memory data bus 3						Input
U18	**ED4**	IO	External memory data bus 4						Input
V19	**ED5**	IO	External memory data bus 5						Input
W19	**ED6**	IO	External memory data bus 6						Input
W18	**ED7**	IO	External memory data bus 7						Input
U17	**ED8**	IO	External memory data bus 8						Input
W17	**ED9**	IO	External memory data bus 9						Input
T16	**ED10**	IO	External memory data bus 10						Input
U16	**ED11**	IO	External memory data bus 11						Input

MTK Confidential Release for Konka

V16	**ED12**	IO	External memory data bus 12						Input
T15	**ED13**	IO	External memory data bus 13						Input
U15	**ED14**	IO	External memory data bus 14						Input
W15	**ED15**	IO	External memory data bus 15						Input
P12	**ERD#**	O	External memory read strobe						1
T12	**EWR#**	O	External memory write strobe						1
U12	**ECS0#**	O	External memory chip select 0						1
V12	**ECS1#**	O	External memory chip select 1						1
P11	**ECS2#**	O	External memory chip select 2						1
R11	**ECS3#**	O	External memory chip select 3						1
R14	**EWAIT**	O	Flash, PSRAM and CellularRAM data ready					PU	Input
T14	**ECAS#**	O	MobileRAM column address						1
W14	**ERAS#**	O	MobileRAM row address						1
R13	**ECKE**	O	MobileRAM clock enable						1
T13	**EDCLK**	O	MobileRAM clock						
V13	**ELB#**	O	External memory lower byte strobe						1
W13	**EUB#**	O	External memory upper byte strobe						1
T11	**EPDN#**	O	PSRAM power down control	GPO2	**EPDN#**	26Mhz	13MHz		0
W11	**EADV#**	O	Flash, PSRAM and CellularRAM address valid						1
V11	**ECLK**	O	Flash, PSRAM and CellularRAM clock						0
P10	**EA0**	O	External memory address bus 0						0
T10	**EA1**	O	External memory address bus 1						0
U10	**EA2**	O	External memory address bus 2						0
W10	**EA3**	O	External memory address bus 3						0
R9	**EA4**	O	External memory address bus 4						0
T9	**EA5**	O	External memory address bus 5						0
U9	**EA6**	O	External memory address bus 6						0
V9	**EA7**	O	External memory address bus 7						0
R8	**EA8**	O	External memory address bus 8						0
T8	**EA9**	O	External memory address bus 9						0
W8	**EA10**	O	External memory address bus 10						0
P8	**EA11**	O	External memory address bus 11						0
R7	**EA12**	O	External memory address bus 12						0
U7	**EA13**	O	External memory address bus 13						0
V7	**EA14**	O	External memory address bus 14						0
W7	**EA15**	O	External memory address bus 15						0
T6	**EA16**	O	External memory address bus 16						0
U6	**EA17**	O	External memory address bus 17						0
W6	**EA18**	O	External memory address bus 18						0
R5	**EA19**	O	External memory address bus 19						0
T5	**EA20**	O	External memory address bus 20						0
U5	**EA21**	O	External memory address bus 21						0
V5	**EA22**	O	External memory address bus 22						0
W4	**EA23**	O	External memory address bus 23						0
V4	**EA24**	O	External memory address bus 24						0
W3	**EA25**	O	External memory address bus 25						0
			USB Interface						
R18	**USB_DP**	IO	USB D+ Input/Output						
R19	**USB_DM**	IO	USB D- Input/Output						
			Memory Card Interface						

MTK Confidential Release for Konka

P17	**MCCM0**	IO	SD Command/MS Bus State Output					PU/PD	
P18	**MCDA0**	IO	SD Serial Data IO 0/MS Serial Data IO					PU/PD	
P19	**MCDA1**	IO	SD Serial Data IO 1					PU/PD	
N17	**MCDA2**	IO	SD Serial Data IO 2					PU/PD	
N18	**MCDA3**	IO	SD Serial Data IO 3					PU/PD	
M18	**MCCK**	O	SD Serial Clock/MS Serial Clock Output						
N19	**MCPWRON**	O	SD Power On Control Output						
M16	**MCWP**	I	SD Write Protect Input					PU/PD	Input
M17	**MCINS**	I	SD Card Detect Input					PU/PD	Input
			UART/IrDA Interface						
K15	**URXD1**	I	UART 1 receive data					PU	Input
K16	**UTXD1**	O	UART 1 transmit data						1
K17	**UCTS1**	I	UART 1 clear to send					PU	Input
K18	**URTS1**	O	UART 1 request to send						1
K19	URXD2	IO	UART 2 receive data	**GPIO37**	URXD2	UCTS3		PU	Input
J15	UTXD2	IO	UART 2 transmit data	**GPIO38**	UTXD2	URTS3		PU	Input
J16	URXD3	IO	UART 3 receive data	**GPIO39**	URXD3			PU	Input
J17	UTXD3	IO	UART 3 transmit data	**GPIO40**	UTXD3		DSP_TID 6	PU	Input
J19	IRDA_RXD	IO	IrDA receive data	**GPIO41**	IRDA_RXD	UCTS2	SWDBGD 15	PU	Input
H15	IRDA_TXD	IO	IrDA transmit data	**GPIO42**	IRDA_TXD	URTS2	SWDBG1 4	PU	Input
H16	IRDA_PDN	IO	IrDA Power Down Control	**GPIO43**	IRDA_PDN		SWDBG1 3	PU	Input
			Digital Audio Interface						
E18	DAICLK	IO	DAI clock output	**GPIO49**	DAICLK		SWDBGD 12	PU	Input
E19	DAIPCMOUT	IO	DAI pcm data out	**GPIO50**	DAIPCMOUT		SWDBGD 11	PD	Input
D16	DAIPCMIN	IO	DAI pcm data input	**GPIO51**	DAIPCMIN		SWDBGD 10	PU	Input
D19	DAIRST	IO	DAI reset signal input	**GPIO52**	DAIRST		SWDBG9	PU	Input
D18	DAISYNC	IO	DAI frame synchronization signal output	**GPIO53**	DAISYNC		SWDBG8	PU	Input
			CMOS Sensor Interface						
J12	CMRST	IO	CMOS sensor reset signal output	**GPIO12**	CMRST			PD	Input
K12	CMPDN	IO	CMOS sensor power down control	**GPIO13**	CMPDN			PD	Input
H12	**CMVREF**	I	Sensor vertical reference signal input					PD	Input
H11	**CMHREF**	I	Sensor horizontal reference signal input					PD	Input
H9	**CMPCLK**	I	CMOS sensor pixel clock input					PD	Input
H10	**CMMCLK**	O	CMOS sensor master clock output						0
H8	**CMDAT9**	I	CMOS sensor data input 9	**CMDAT 9**	GPIO74			PD	Input
J8	**CMDAT8**	I	CMOS sensor data input 8	**CMDAT 8**	GPIO73			PD	Input
K8	**CMDAT7**	I	CMOS sensor data input 7	**CMDAT**	GPIO72			PD	Input

MTK Confidential Release for Konka

				7					
L8	**CMDAT6**	I	CMOS sensor data input 6	**CMDAT 6**	GPIO71			PD	Input
M8	**CMDAT5**	I	CMOS sensor data input 5	**CMDAT 5**	GPIO70			PD	Input
M9	**CMDAT4**	I	CMOS sensor data input 4	**CMDAT 4**	GPIO69			PD	Input
M10	**CMDAT3**	I	CMOS sensor data input 3	**CMDAT 3**	GPIO68			PD	Input
M11	**CMDAT2**	I	CMOS sensor data input 2	**CMDAT 2**	GPIO62			PD	Input
M12	CMDAT1	IO	CMOS sensor data input 1	**GPIO50**	CMDAT1			PD	Input
L12	CMDAT0	IO	CMOS sensor data input 0	**GPIO51**	CMDAT0			PD	Input
			Analog Interface						
B15	**AU_MOUL**		Audio analog output left channel						
A15	**AU_MOUR**		Audio analog output right channel						
C14	**AU_M_BYP**		Audio DAC bypass pin						
B14	**AU_FMINL**		FM radio analog input left channel						
A14	**AU_FMINR**		FM radio analog input right channel						
D13	**AU_OUT1_P**		Earphone 1 amplifier output (+)						
C13	**AU_OUT1_N**		Earphone 1 amplifier output (-)						
B12	**AU_OUT0_N**		Earphone 0 amplifier output (-)						
A12	**AU_OUT0_P**		Earphone 0 amplifier output (+)						
C12	**AU_MICBIAS_P**		Microphone bias supply (+)						
D12	**AU_MICBIAS_N**		Microphone bias supply (-)						
C11	**AU_VREF_N**		Audio reference voltage (-)						
B11	**AU_VREF_P**		Audio reference voltage (+)						
D10	**AU_VIN0_P**		Microphone 0 amplifier input (+)						
C10	**AU_VIN0_N**		Microphone 0 amplifier input (-)						
B10	**AU_VIN1_N**		Microphone 1 amplifier input (-)						
A10	**AU_VIN1_P**		Microphone 1 amplifier input (+)						
D9	**BDLAQP**		Quadrature input (Q+) baseband codec downlink						
C9	**BDLAQN**		Quadrature input (Q-) baseband codec downlink						
A9	**BDLAIN**		In-phase input (I+) baseband codec downlink						
B9	**BDLAIP**		In-phase input (I-) baseband codec downlink						
B8	**BUPAIP**		In-phase output (I+) baseband codec uplink						
A8	**BUPAIN**		In-phase output (I-) baseband codec uplink						
C8	**BUPAQN**		Quadrature output (Q+) baseband codec uplink						
D8	**BUPAQP**		Quadrature output (Q-) baseband codec uplink						
B7	**APC**		Automatic power control DAC output						
D6	**AUXADIN0**		Auxiliary ADC input 0						
C6	**AUXADIN1**		Auxiliary ADC input 1						
B6	**AUXADIN2**		Auxiliary ADC input 2						
A6	**AUXADIN3**		Auxiliary ADC input 3						
C5	**AUXADIN4**		Auxiliary ADC input 4						
B5	**AUXADIN5**		Auxiliary ADC input 5						

MTK Confidential Release for Konka

A5	**AUXADIN6**		Auxiliary ADC input 6						
C4	**AUX_REF**		Auxiliary ADC reference voltage input						
B4	**AFC**		Automatic frequency control DAC output						
A4	**AFC_BYP**		Automatic frequency control DAC bypass capacitance						
			VCXO Interface						
B1	**SYSCLK**		13MHz or 26MHz system clock input						
F6	**PLLOUT**		PLL reference voltage output						
			RTC Interface						
D1	**XIN**		32.768 KHz crystal input						
D2	**XOUT**		32.768 KHz crystal output						
E1	**BBWAKEUP**	O	Baseband power on/off control						1
			TV Interface						
A2	**TVOUT**		TV DAC Output						
C2	**FSRES**								
			Supply Voltages						
E3	**VDDK**		Supply voltage of internal logic						
M2	**VDDK**		Supply voltage of internal logic						
V8	**VDDK**		Supply voltage of internal logic						
V14	**VDDK**		Supply voltage of internal logic						
F18	**VDDK**		Supply voltage of internal logic						
F11	**VDDK**		Supply voltage of internal logic						
V3	**VDD33_EMI**		Supply voltage of memory interface driver						
V6	**VDD33_EMI**		Supply voltage of memory interface driver						
T7	**VDD33_EMI**		Supply voltage of memory interface driver						
W9	**VDD33_EMI**		Supply voltage of memory interface driver						
R10	**VDD33_EMI**		Supply voltage of memory interface driver						
W12	**VDD33_EMI**		Supply voltage of memory interface driver						
U13	**VDD33_EMI**		Supply voltage of memory interface driver						
V15	**VDD33_EMI**		Supply voltage of memory interface driver						
T17	**VDD33_EMI**		Supply voltage of memory interface driver						
V17	**VDD33_EMI**		Supply voltage of memory interface driver						
W5	**VSS33_EMI**		Ground of memory interface driver						
R6	**VSS33_EMI**		Ground of memory interface driver						
U8	**VSS33_EMI**		Ground of memory interface driver						
V10	**VSS33_EMI**		Ground of memory interface driver						
U11	**VSS33_EMI**		Ground of memory interface driver						
R12	**VSS33_EMI**		Ground of memory interface driver						
U14	**VSS33_EMI**		Ground of memory interface driver						
W16	**VSS33_EMI**		Ground of memory interface driver						
R17	**VSS33_EMI**		Ground of memory interface driver						
V18	**VSS33_EMI**		Ground of memory interface driver						

MTK Confidential Release for Konka

P16	**VDD33_AUX 2**		Supply voltage of drivers for USB						
N16	**VDD33_AUX 1**		Supply Voltage of MS/MMC/SD						
G2	**VDD33**		Supply voltage of drivers except memory interface, USB and MS/MMC/SD						
K1	**VDD33**		Supply voltage of drivers except memory interface, USB and MS/MMC/SD						
R1	**VDD33**		Supply voltage of drivers except memory interface, USB and MS/MMC/SD						
J18	**VDD33**		Supply voltage of drivers except memory interface, USB and MS/MMC/SD						
B19	**VDD33**		Supply voltage of drivers except memory interface, USB and MS/MMC/SD						
E15	**VDD33**		Supply voltage of drivers except memory interface, USB and MS/MMC/SD						
E13	**VDD33**		Supply voltage of drivers except memory interface, USB and MS/MMC/SD						
E11	**VDD33**		Supply voltage of drivers except memory interface, USB and MS/MMC/SD						
F9	**VDD33**		Supply voltage of drivers except memory interface, USB and MS/MMC/SD						
E6	**VDD33**		Supply voltage of drivers except memory interface, USB and MS/MMC/SD						
D4	**VDD33**		Supply voltage of drivers except memory interface, USB and MS/MMC/SD						
B3	**VDD33**		Supply voltage of drivers except memory interface, USB and MS/MMC/SD						
W2	**VSS33**		Ground of drivers except memory interface, USB and MS/MMC/SD						
E2	**VSS33**		Ground of drivers except memory interface, USB and MS/MMC/SD						
H1	**VSS33**		Ground of drivers except memory interface, USB and MS/MMC/SD						
M1	**VSS33**		Ground of drivers except memory interface, USB and MS/MMC/SD						
L15	**VSS33**		Ground of drivers except memory interface, USB and MS/MMC/SD						
F19	**VSS33**		Ground of drivers except memory interface, USB and MS/MMC/SD						
B16	**VSS33**		Ground of drivers except memory interface, USB and MS/MMC/SD						
A16	**VSS33**		Ground of drivers except memory interface, USB and MS/MMC/SD						
E14	**VSS33**		Ground of drivers except memory interface, USB and MS/MMC/SD						
E12	**VSS33**		Ground of drivers except memory interface, USB and MS/MMC/SD						

MTK Confidential Release for Konka

F10	**VSS33**		Ground of drivers except memory interface, USB and MS/MMC/SD						
E7	**VSS33**		Ground of drivers except memory interface, USB and MS/MMC/SD						
D5	**VSS33**		Ground of drivers except memory interface, USB and MS/MMC/SD						
A3	**VSS33**		Ground of drivers except memory interface, USB and MS/MMC/SD						
A1	**AVDD_PLL**		Supply voltage for PLL						
C1	**AVSS_PLL**		Ground for PLL supply						
B2	**AVDD_TV**		Supply voltage for TV out						
C3	**AVSS_TV**		Ground for TV out						
D3	**AVDD_RTC**		Supply voltage for Real Time Clock						
			Analog Supplies						
C15	**AVDD_MBUF**		Supply Voltage for Audio band section						
D14	**AVSS_MBUF**		GND for Audio band section						
B13	**AVDD_BUF**		Supply voltage for voice band transmit section						
A13	**AVSS_BUF**		GND for voice band transmit section						
D11	**AVDD_AFE**		Supply voltage for voice band receive section						
A11	**AGND_AFE**		GND reference voltage for voice band section						
E10	**AVSS_AFE**		GND for voice band receive section						
E9	**AGND_RFE**		GND reference voltage for baseband section, APC, AFC and AUXADC						
E8	**AVSS_GSMRFTX**		GND for baseband transmit section						
D7	**AVDD_GSMRFTX**		Supply voltage for baseband transmit section						
C7	**AVSS_RFE**		GND for baseband receive section, APC, AFC and AUXADC						
A7	**AVDD_RFE**		Supply voltage for baseband receive section, APC, AFC and AUXADC						

Table 2 Pin Descriptions (**Bolded** types are functions at reset)

MTK Confidential Release for Konka

2.5 Power Description

Ball 13X13	Name	IO Supply	IO GND	Core Supply	Core GND	Remark
A16	**VSS33**					
E15	**VDD33**					Typ. 2.8V
E14	**VSS33**					
E13	**VDD33**					Typ. 2.8V
E12	**VSS33**					
E11	**VDD33**					Typ. 2.8V
F11	**VDDK**					Typ. 1.2V
F10	**VSS33**					
F9	**VDD33**					Typ. 2.8V
E7	**VSS33**					
E6	**VDD33**					Typ. 2.8V
D5	**VSS33**					
J12	CMRST	VDD33	VSS33	VDDK	VSSK	
K12	CMPDN	VDD33	VSS33	VDDK	VSSK	
H12	CMVREF	VDD33	VSS33	VDDK	VSSK	
H11	CMHREF	VDD33	VSS33	VDDK	VSSK	
H9	CMPCLK	VDD33	VSS33	VDDK	VSSK	
H10	CMMCLK	VDD33	VSS33	VDDK	VSSK	
D4	**VDD33**					Typ. 2.8V
H8	CMDAT9	VDD33	VSS33	VDDK	VSSK	
J8	CMDAT8	VDD33	VSS33	VDDK	VSSK	
K8	CMDAT7	VDD33	VSS33	VDDK	VSSK	
L8	CMDAT6	VDD33	VSS33	VDDK	VSSK	
M8	CMDAT5	VDD33	VSS33	VDDK	VSSK	
A3	**VSS33**					
M9	CMDAT4	VDD33	VSS33	VDDK	VSSK	
M10	CMDAT3	VDD33	VSS33	VDDK	VSSK	
M11	CMDAT2	VDD33	VSS33	VDDK	VSSK	
M12	CMDAT1	VDD33	VSS33	VDDK	VSSK	
L12	CMDAT0	VDD33	VSS33	VDDK	VSSK	
B3	**VDD33**					Typ. 2.8V
B2	**AVDD_TV**					Typ. 2.8V
A2	TVOUT	AVDD_TV	AVSS_TV	AVDD_TV	AVSS_TV	
C2	FSRES	AVDD_TV	AVSS_TV	AVDD_TV	AVSS_TV	
C3	**AVSS_TV**					
A1	**AVDD_PLL**					Typ. 2.8V
B1	SYSCLK	AVDD_PLL	AVSS_PLL	AVDD_PLL	AVSS_PLL	
F6	PLLOUT	AVDD_PLL	AVSS_PLL	AVDD_PLL	AVSS_PLL	
C1	**AVSS_PLL**					
D3	**AVDD_RTC**					Typ. 1.2V
D2	XOUT	AVDD_RTC	VSS33	AVDD_RTC	VSS33	
D1	XIN	AVDD_RTC	VSS33	AVDD_RTC	VSS33	
E1	BBWAKEUP	AVDD_RTC	VSS33	AVDD_RTC	VSS33	
E2	**VSS33**					
E5	TESTMODE	VDD33	VSS33	VDDK	VSSK	
E3	**VDDK**					Typ. 1.2V
E4	JTRST#	VDD33	VSS33	VDDK	VSSK	
F5	JTCK	VDD33	VSS33	VDDK	VSSK	

MTK Confidential Release for Konka

F4	JTDI	VDD33	VSS33	VDDK	VSSK	
F3	JTMS	VDD33	VSS33	VDDK	VSSK	
F2	JTDO	VDD33	VSS33	VDDK	VSSK	
F1	JRTCK	VDD33	VSS33	VDDK	VSSK	
G5	BPI_BUS0	VDD33	VSS33	VDDK	VSSK	
G4	BPI_BUS1	VDD33	VSS33	VDDK	VSSK	
G2	**VDD33**					Typ. 2.8V
G3	BPI_BUS2	VDD33	VSS33	VDDK	VSSK	
G1	BPI_BUS3	VDD33	VSS33	VDDK	VSSK	
J6	BPI_BUS4	VDD33	VSS33	VDDK	VSSK	
H5	BPI_BUS5	VDD33	VSS33	VDDK	VSSK	
H4	BPI_BUS6	VDD33	VSS33	VDDK	VSSK	
H3	BPI_BUS7	VDD33	VSS33	VDDK	VSSK	
H2	BPI_BUS8	VDD33	VSS33	VDDK	VSSK	
H1	**VSS33**					
J5	BPI_BUS9	VDD33	VSS33	VDDK	VSSK	
J4	BSI_CS0	VDD33	VSS33	VDDK	VSSK	
J3	BSI_DATA	VDD33	VSS33	VDDK	VSSK	
J2	BSI_CLK	VDD33	VSS33	VDDK	VSSK	
J1	LSCK	VDD33	VSS33	VDDK	VSSK	
K5	LSA0	VDD33	VSS33	VDDK	VSSK	
K4	LSDA	VDD33	VSS33	VDDK	VSSK	
K3	LSCE0#	VDD33	VSS33	VDDK	VSSK	
K2	LSCE1#	VDD33	VSS33	VDDK	VSSK	
K1	**VDD33**					Typ. 2.8V
K6	LPCE1#	VDD33	VSS33	VDDK	VSSK	
L5	LPCE0#	VDD33	VSS33	VDDK	VSSK	
L4	LRST#	VDD33	VSS33	VDDK	VSSK	
L3	LRD#	VDD33	VSS33	VDDK	VSSK	
L2	LPA0	VDD33	VSS33	VDDK	VSSK	
L1	LWR#	VDD33	VSS33	VDDK	VSSK	
L6	NLD7	VDD33	VSS33	VDDK	VSSK	
M5	NLD6	VDD33	VSS33	VDDK	VSSK	
M4	NLD5	VDD33	VSS33	VDDK	VSSK	
M1	**VSS33**					
M2	**VDDK**					Typ. 1.2V
M3	NLD4	VDD33	VSS33	VDDK	VSSK	
N5	NLD3	VDD33	VSS33	VDDK	VSSK	
N4	NLD2	VDD33	VSS33	VDDK	VSSK	
N3	NLD1	VDD33	VSS33	VDDK	VSSK	
N2	NLD0	VDD33	VSS33	VDDK	VSSK	
N1	NRNB	VDD33	VSS33	VDDK	VSSK	
P5	NCLE	VDD33	VSS33	VDDK	VSSK	
P4	NALE	VDD33	VSS33	VDDK	VSSK	
P3	NWE#	VDD33	VSS33	VDDK	VSSK	
P2	NRE#	VDD33	VSS33	VDDK	VSSK	
P1	NCE#	VDD33	VSS33	VDDK	VSSK	
R1	**VDD33**					Typ. 2.8V
R4	PWM1	VDD33	VSS33	VDDK	VSSK	
R3	PWM2	VDD33	VSS33	VDDK	VSSK	
R2	ALERTER	VDD33	VSS33	VDDK	VSSK	
T4	SRCLKENA	VDD33	VSS33	VDDK	VSSK	

MTK Confidential Release for Konka

T1	SRCLKENAN	VDD33	VSS33	VDDK	VSSK	
T3	SRCLKENAI	VDD33	VSS33	VDDK	VSSK	
T2	SYSRST#	VDD33	VSS33	VDDK	VSSK	
U3	GPIO0	VDD33	VSS33	VDDK	VSSK	
U1	GPIO1	VDD33	VSS33	VDDK	VSSK	
U2	EINT0	VDD33	VSS33	VDDK	VSSK	
V1	EINT1	VDD33	VSS33	VDDK	VSSK	
W1	EINT2	VDD33	VSS33	VDDK	VSSK	
V2	EINT3	VDD33	VSS33	VDDK	VSSK	
W2	**VSS33**					
V3	**VDD33_EMI**					Typ. 1.8/2.8V
U4	MIRQ	VDD33_EMI	VSS33_EMI	VDDK	VSSK	
W3	EA25	VDD33_EMI	VSS33_EMI	VDDK	VSSK	
V4	EA24	VDD33_EMI	VSS33_EMI	VDDK	VSSK	
W4	EA23	VDD33_EMI	VSS33_EMI	VDDK	VSSK	
W5	**VSS33_EMI**					
V5	EA22	VDD33_EMI	VSS33_EMI	VDDK	VSSK	
U5	EA21	VDD33_EMI	VSS33_EMI	VDDK	VSSK	
T5	EA20	VDD33_EMI	VSS33_EMI	VDDK	VSSK	
R5	EA19	VDD33_EMI	VSS33_EMI	VDDK	VSSK	
V6	**VDD33_EMI**					Typ. 1.8/2.8V
W6	EA18	VDD33_EMI	VSS33_EMI	VDDK	VSSK	
U6	EA17	VDD33_EMI	VSS33_EMI	VDDK	VSSK	
T6	EA16	VDD33_EMI	VSS33_EMI	VDDK	VSSK	
R6	**VSS33_EMI**					
W7	EA15	VDD33_EMI	VSS33_EMI	VDDK	VSSK	
V7	EA14	VDD33_EMI	VSS33_EMI	VDDK	VSSK	
U7	EA13	VDD33_EMI	VSS33_EMI	VDDK	VSSK	
T7	**VDD33_EMI**					Typ. 1.8/2.8V
R7	EA12	VDD33_EMI	VSS33_EMI	VDDK	VSSK	
P8	EA11	VDD33_EMI	VSS33_EMI	VDDK	VSSK	
W8	EA10	VDD33_EMI	VSS33_EMI	VDDK	VSSK	
V8	**VDDK**					Typ. 1.2V
U8	**VSS33_EMI**					
T8	EA9	VDD33_EMI	VSS33_EMI	VDDK	VSSK	
R8	EA8	VDD33_EMI	VSS33_EMI	VDDK	VSSK	
V9	EA7	VDD33_EMI	VSS33_EMI	VDDK	VSSK	
W9	**VDD33_EMI**					Typ. 1.8/2.8V
U9	EA6	VDD33_EMI	VSS33_EMI	VDDK	VSSK	
T9	EA5	VDD33_EMI	VSS33_EMI	VDDK	VSSK	
R9	EA4	VDD33_EMI	VSS33_EMI	VDDK	VSSK	
V10	**VSS33_EMI**					
W10	EA3	VDD33_EMI	VSS33_EMI	VDDK	VSSK	
U10	EA2	VDD33_EMI	VSS33_EMI	VDDK	VSSK	
T10	EA1	VDD33_EMI	VSS33_EMI	VDDK	VSSK	
R10	**VDD33_EMI**					Typ. 1.8/2.8V
P10	EA0	VDD33_EMI	VSS33_EMI	VDDK	VSSK	
W11	EADV#	VDD33_EMI	VSS33_EMI	VDDK	VSSK	
V11	ECLK	VDD33_EMI	VSS33_EMI	VDDK	VSSK	
U11	**VSS33_EMI**					
T11	EPDN#	VDD33_EMI	VSS33_EMI	VDDK	VSSK	
R11	ECS3#	VDD33_EMI	VSS33_EMI	VDDK	VSSK	

MTK Confidential Release for Konka

P11	ECS2#	VDD33_EMI	VSS33_EMI	VDDK	VSSK	
W12	**VDD33_EMI**					Typ. 1.8/2.8V
V12	ECS1#	VDD33_EMI	VSS33_EMI	VDDK	VSSK	
U12	ECS0#	VDD33_EMI	VSS33_EMI	VDDK	VSSK	
T12	EWR#	VDD33_EMI	VSS33_EMI	VDDK	VSSK	
R12	**VSS33_EMI**					
P12	ERD#	VDD33_EMI	VSS33_EMI	VDDK	VSSK	
W13	EUB#	VDD33_EMI	VSS33_EMI	VDDK	VSSK	
V13	ELB#	VDD33_EMI	VSS33_EMI	VDDK	VSSK	
U13	**VDD33_EMI**					Typ. 1.8/2.8V
T13	EDCLK	VDD33_EMI	VSS33_EMI	VDDK	VSSK	
R13	ECKE	VDD33_EMI	VSS33_EMI	VDDK	VSSK	
W14	ERAS#	VDD33_EMI	VSS33_EMI	VDDK	VSSK	
V14	**VDDK**					Typ. 1.2V
U14	**VSS33_EMI**					
T14	ECAS#	VDD33_EMI	VSS33_EMI			
R14	EWAIT	VDD33_EMI	VSS33_EMI			
W15	ED15	VDD33_EMI	VSS33_EMI	VDDK	VSSK	
V15	**VDD33_EMI**					Typ. 1.8/2.8V
U15	ED14	VDD33_EMI	VSS33_EMI	VDDK	VSSK	
T15	ED13	VDD33_EMI	VSS33_EMI	VDDK	VSSK	
V16	ED12	VDD33_EMI	VSS33_EMI	VDDK	VSSK	
W16	**VSS33_EMI**					
U16	ED11	VDD33_EMI	VSS33_EMI	VDDK	VSSK	
T16	ED10	VDD33_EMI	VSS33_EMI	VDDK	VSSK	
W17	ED9	VDD33_EMI	VSS33_EMI	VDDK	VSSK	
V17	**VDD33_EMI**					Typ. 1.8/2.8V
U17	ED8	VDD33_EMI	VSS33_EMI	VDDK	VSSK	
W18	ED7	VDD33_EMI	VSS33_EMI	VDDK	VSSK	
W19	ED6	VDD33_EMI	VSS33_EMI	VDDK	VSSK	
V18	**VSS33_EMI**					
V19	ED5	VDD33_EMI	VSS33_EMI	VDDK	VSSK	1.2V
U18	ED4	VDD33_EMI	VSS33_EMI	VDDK	VSSK	
U19	ED3	VDD33_EMI	VSS33_EMI	VDDK	VSSK	
T17	**VDD33_EMI**					Typ. 1.8/2.8V
T18	ED2	VDD33_EMI	VSS33_EMI	VDDK	VSSK	
T19	ED1	VDD33_EMI	VSS33_EMI	VDDK	VSSK	
R15	ED0	VDD33_EMI	VSS33_EMI	VDDK	VSSK	
R16	WATCHDOG	VDD33_EMI	VSS33_EMI	VDDK	VSSK	
R17	**VSS33_EMI**					
R18	USB_DP	VDD33_AUX2	VSS33	VDDK	VSSK	
R19	USB_DM	VDD33_AUX2	VSS33	VDDK	VSSK	
P16	**VDD33_AUX2**					Typ. 3.3V
N16	**VDD33_AUX1**					Typ. 3.3V
P17	MCCM0	VDD33_AUX1	VSS33	VDDK	VSSK	
P18	MCDA0	VDD33_AUX1	VSS33	VDDK	VSSK	
P19	MCDA1	VDD33_AUX1	VSS33	VDDK	VSSK	
N17	MCDA2	VDD33_AUX1	VSS33	VDDK	VSSK	
N18	MCDA3	VDD33_AUX1	VSS33	VDDK	VSSK	
N19	MCPWRON	VDD33_AUX1	VSS33	VDDK	VSSK	
M16	MCWP	VDD33_AUX1	VSS33	VDDK	VSSK	
M17	MCINS	VDD33_AUX1	VSS33	VDDK	VSSK	
M18	MCCK	VDD33_AUX1	VSS33	VDDK	VSSK	

MTK Confidential Release for Konka

L15	**VSS33**					
M19	SIMRST	VDD33	VSS33	VDDK	VSSK	
L16	SIMCLK	VDD33	VSS33	VDDK	VSSK	
L17	SIMVCC	VDD33	VSS33	VDDK	VSSK	
L18	SIMSEL	VDD33	VSS33	VDDK	VSSK	
L19	SIMDATA	VDD33	VSS33	VDDK	VSSK	
K15	URXD1	VDD33	VSS33	VDDK	VSSK	
K16	UTXD1	VDD33	VSS33	VDDK	VSSK	
K17	UCTS1	VDD33	VSS33	VDDK	VSSK	
K18	URTS1	VDD33	VSS33	VDDK	VSSK	
K19	URXD2	VDD33	VSS33	VDDK	VSSK	
J15	UTXD2	VDD33	VSS33	VDDK	VSSK	
J16	URXD3	VDD33	VSS33	VDDK	VSSK	
J17	UTXD3	VDD33	VSS33	VDDK	VSSK	
J18	**VDD33**					Typ. 2.8V
J19	IRDA_RXD	VDD33	VSS33	VDDK	VSSK	
H15	IRDA_TXD	VDD33	VSS33	VDDK	VSSK	
H16	IRDA_PDN	VDD33	VSS33	VDDK	VSSK	
H17	KCOL6	VDD33	VSS33	VDDK	VSSK	
H18	KCOL5	VDD33	VSS33	VDDK	VSSK	
H19	KCOL4	VDD33	VSS33	VDDK	VSSK	
G15	KCOL3	VDD33	VSS33	VDDK	VSSK	
G16	KCOL2	VDD33	VSS33	VDDK	VSSK	
G17	KCOL1	VDD33	VSS33	VDDK	VSSK	
G18	KCOL0	VDD33	VSS33	VDDK	VSSK	
G19	KROW5	VDD33	VSS33	VDDK	VSSK	
F15	KROW4	VDD33	VSS33	VDDK	VSSK	
F16	KROW3	VDD33	VSS33	VDDK	VSSK	
F17	KROW2	VDD33	VSS33	VDDK	VSSK	
F18	**VDDK**					Typ. 1.2V
F19	**VSS33**					
E16	KROW1	VDD33	VSS33	VDDK	VSSK	
E17	KROW0	VDD33	VSS33	VDDK	VSSK	
E18	DAICLK	VDD33	VSS33	VDDK	VSSK	
E19	DAIPCMOUT	VDD33	VSS33	VDDK	VSSK	
D16	DAIPCMIN	VDD33	VSS33	VDDK	VSSK	
D19	DAIRST	VDD33	VSS33	VDDK	VSSK	
D18	DAISYNC	VDD33	VSS33	VDDK	VSSK	
D17	GPIO2	VDD33	VSS33	VDDK	VSSK	
C19	GPIO3	VDD33	VSS33	VDDK	VSSK	
C18	GPIO4	VDD33	VSS33	VDDK	VSSK	
B19	**VDD33**					Typ. 2.8V
C17	GPIO5	VDD33	VSS33	VDDK	VSSK	
A19	GPIO6	VDD33	VSS33	VDDK	VSSK	
B18	GPIO7	VDD33	VSS33	VDDK	VSSK	
B17	MFIQ	VDD33	VSS33	VDDK	VSSK	
A18	GPIO8	VDD33	VSS33	VDDK	VSSK	
A17	GPIO9	VDD33	VSS33	VDDK	VSSK	
B16	**VSS33**					
C15	**AVDD_MBUF**					Typ. 2.8V
B15	AU_MOUTL					
A15	AU_MOUTR					
D14	**AVSS_MBUF**					

MTK Confidential Release for Konka

C14	AU_M_BYP					
B14	AU_FMINL					
A14	AU_FMINR					
D13	AU_OUT1_P					
C13	AU_OUT1_N					
B12	AU_OUT0_N					
B13	**AVDD_BUF**					Typ. 2.8V
A12	AU_OUT0_P					
A13	**AVSS_BUF**					
C12	AU_MICBIAS_P					
D12	AU_MICBIAS_N					
D11	**AVDD_AFE**					Typ. 2.8V
C11	AU_VREF_N					
B11	AU_VREF_P					
A11	**AGND_AFE**					
D10	AU_VIN0_P					
C10	AU_VIN0_N					
B10	AU_VIN1_N					
A10	AU_VIN1_P					
E10	**AVSS_AFE**					
D9	BDLAQP					
C9	BDLAQN					
E9	**AGND_RFE**					
A9	BDLAIN					
B9	BDLAIP					
E8	**AVSS_GSMRFTX**					
B8	BUPAIP					
A8	BUPAIN					
D7	**AVDD_GSMRFTX**					Typ. 2.8V
C8	BUPAQN					
D8	BUPAQP					
C7	**AVSS_RFE**					
B7	APC					
A7	**AVDD_RFE**					Typ. 2.8V
D6	AUXADIN0					
C6	AUXADIN1					
B6	AUXADIN2					
A6	AUXADIN3					
C5	AUXADIN4					
B5	AUXADIN5					
A5	AUXADIN6					
C4	AUX_REF					
B4	AFC					
A4	AFC_BYP					

Table 3 Power Descriptions

MTK Confidential Release for Konka

3 Micro-Controller Unit Subsystem

Figure 5 illustrates the block diagram of the Micro-Controller Unit Subsystem in MT6228. The subsystem utilizes a main 32-bit ARM7EJ-S RISC processor, which plays the role of the main bus master controlling the whole subsystem. All processor transactions go to code cache first. The code cache controller accesses TCM (128KB memory dedicated to ARM7EJS core), cache memory, or bus according to the processor's request address. If the requested content is found in TCM or in cache, no bus transaction is required. If the code cache hit rate is high enough, bus traffic can be effectively reduced and processor core performance maximized. In addition to the benefits of reuse of memory contents, code cache also has a MPU (Memory Protection Unit), which allows cacheable and protection settings of predefined regions. The contents of code cache are only accessible to MCU, and only MCU instructions are kept in the cache memory (thus the name "code" cache).

The bus comprises of two-level system buses: Advanced High-Performance Bus (AHB) and Advanced Peripheral Bus (APB). All bus transactions originate from bus masters, while slaves can only respond to requests from bus masters. Before data transfer can be established, the bus master must ask for bus ownership, accomplished by request-grant handshaking protocol between masters and arbiters.

Two levels of bus hierarchy are designed to provide optimum usage for different performance requirements. Specifically, AHB Bus, the main system bus, is tailored toward high-speed requirements and provides 32-bit data path with multiplex scheme for bus interconnections. The APB Bus, on the other hand, is designed to reduce interface complexity for lower data transfer rate, and so it is isolated from high bandwidth AHB Bus by APB Bridge. APB Bus supports 16-bit addressing and both 16-bit and 32-bit data paths. APB Bus is also optimized for minimal power consumption by turning off the clock when there is no APB bus activity.

During operation, if the target slave is located on AHB Bus, the transaction is conducted directly on AHB Bus. However, if the target slave is a peripheral and is attached to the APB bus, then the transaction is conducted between AHB and APB bus through the use of APB Bridge.

The MT6228 MCU subsystem supports only memory addressing method. Therefore all components are mapped onto the MCU 32-bit address space. A Memory Management Unit is employed to allow for a central decode scheme. The MMU generates appropriate selection signals for each memory-addressed module on the AHB Bus.

In order to off-load the processor core, a DMA Controller is designated to act as a master and share the bus resources on AHB Bus to perform fast data movement between modules. This controller provides fourteen DMA channels.

The Interrupt Controller provides a software interface to manipulate interrupt events; it can handle up to 32 interrupt sources asserted at the same time. In general, the controller generates 2 levels of interrupt requests, FIQ and IRQ, to the processor.

A 128K Byte SRAM is provided as system memory for high-speed data access. For factory programming purposes, a Boot ROM module is also integrated. These two modules use the same Internal Memory Controller to connect to AHB Bus.

External Memory Interface supports both 8-bit and 16-bit devices. This interface supports both synchronous and asynchronous components, such as Flash, SRAM and parallel LCD. This interface supports page and burst mode type of Flash, Cellular RAM, as well as high performance MobileRAM. In order to take advantages of burst- or page-type devices, a data cache is introduced and placed between AHB Bus and EMI, allowing the data cache to issue burst requests to EMI whenever possible. Since AHB Bus is 32-bit wide, all data transfers are converted into several 8-bit or 16-bit cycles depending on the data width of the target device. In contrast to code cache, contents in data cache are queried when MCU issues data requests, or when other AHB bus masters issue memory requests to EMI.

MTK Confidential Release for Konka

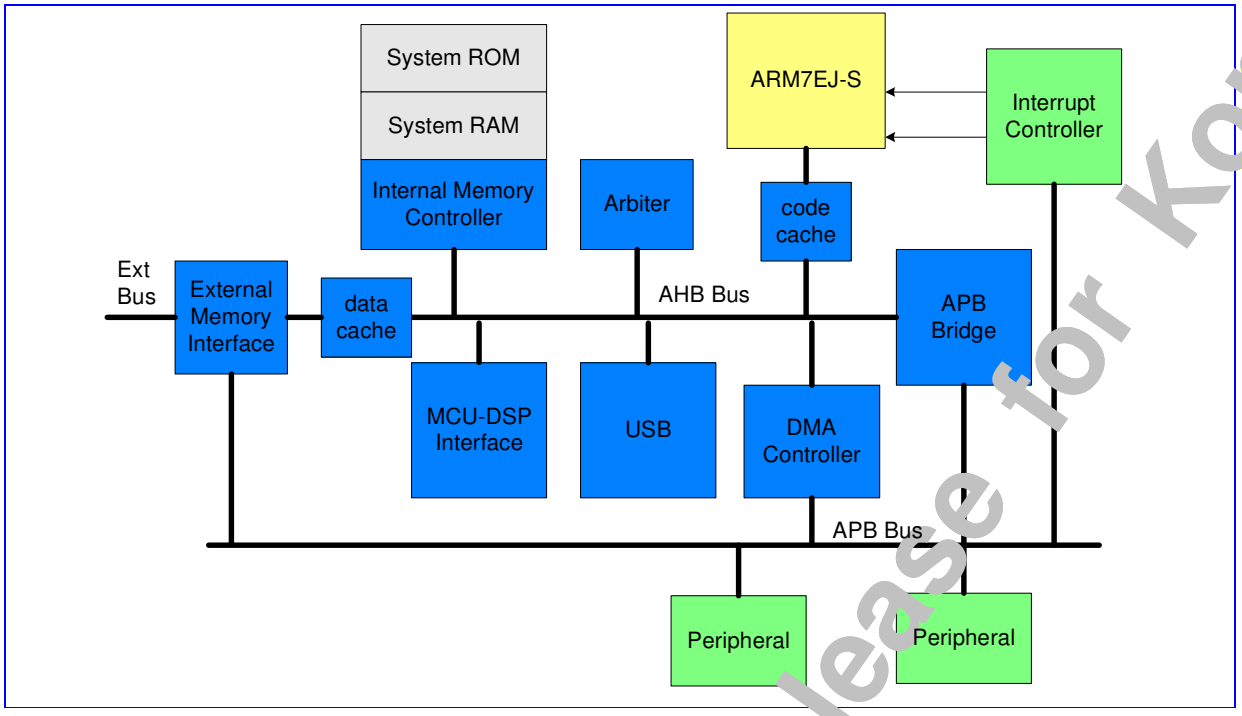

Figure 5 Block Diagram of the Micro-Controller Unit Subsystem in MT6228

3.1 Processor Core

3.1.1 General Description

The Micro-Controller Unit Subsystem in MT6228 uses the 32-bit ARM7EJ-S RISC processor that is based on the Von Neumann architecture with a single 32-bit data bus carrying both instructions and data. The memory interface of ARM7EJ-S is totally compliant with the AMBA based bus system, which allows direct connection to the AHB Bus.

3.2 Memory Management

3.2.1 General Description

The processor core of MT6228 supports only a memory addressing method for instruction fetch and data access. The core manages a 32-bit address space that has addressing capability of up to 4 GB. System RAM, System ROM, Registers, MCU Peripherals and external components are all mapped onto such 32-bit address space, as depicted in **Figure 6**.

MTK Confidential Release for Konka

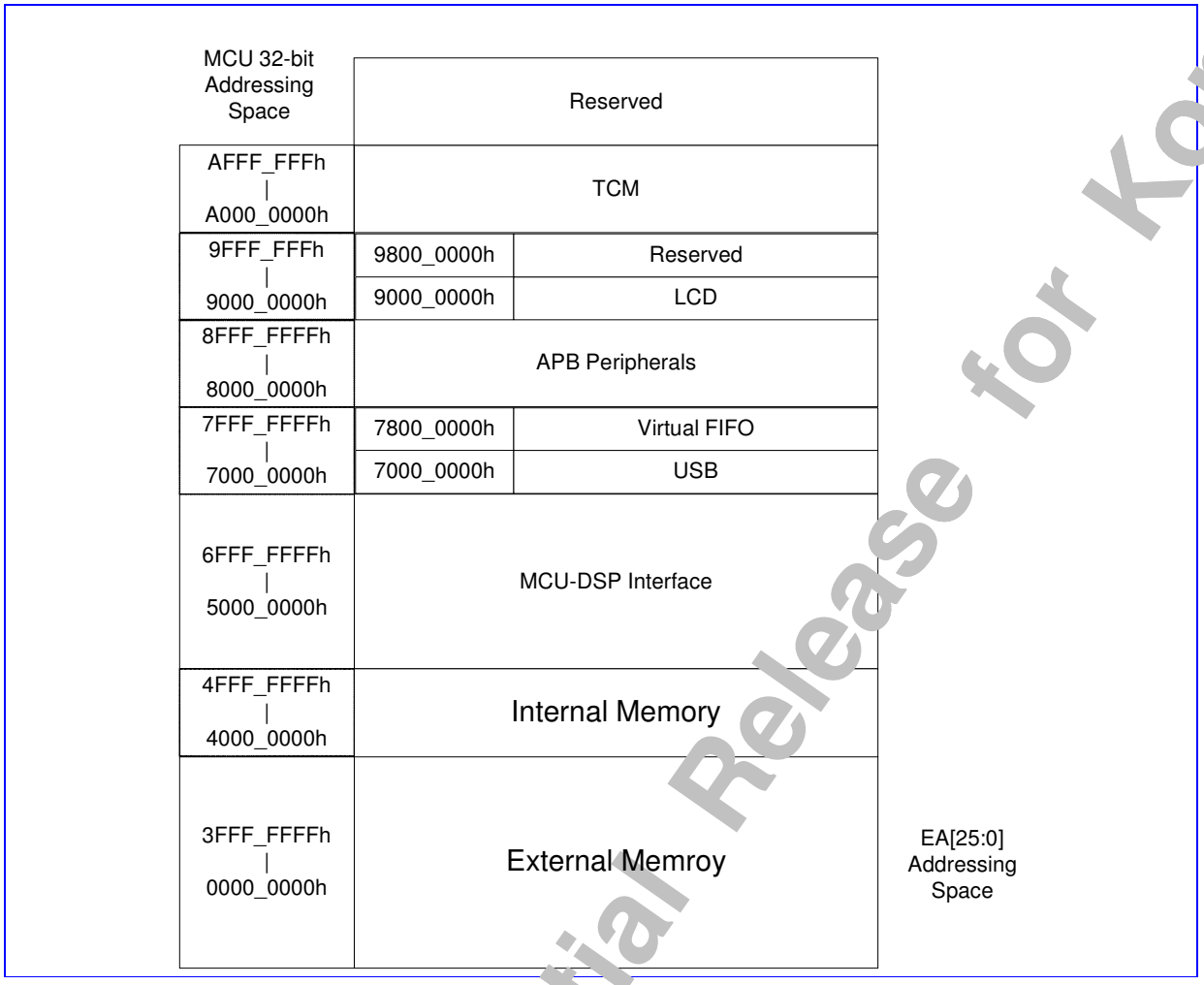

Figure 6 The Memory Layout of MT6228

The address space is organized into blocks of 256 MB each. Memory blocks 0-AFFFFFFFh are defined and currently dedicated to specific functions, while the others are reserved for future usage. The block number is uniquely selected by address line A31-A28 of the internal system bus.

3.2.1.1 External Access

To allow external access, the MT6228 outputs 26 bits (A25-A0) of address lines along with 4 selection signals that correspond to associated memory blocks. That is, MT6228 can support up to 4 MCU addressable external components. The data width of internal system bus is fixed at 32-bit wide, while the data width of the external components can be either 8- or 16- bit.

Since devices are usually available with varied operating grades, adaptive configurations for different applications are needed. MT6228 provides software programmable registers to configure their wait-states to adapt to different operating conditions.

3.2.1.2 Memory Re-mapping Mechanism

To permit more flexible system configuration, a memory re-mapping mechanism is provided. The mechanism allows software program to swap BANK0 (ECS0#) and BANK1 (ECS1#) dynamically. Whenever the bit value of RM0 in

MTK Confidential Release for Konka

register EMI_REMAP is changed, these two banks are swapped accordingly. Furthermore, it allows system to boot from System ROM as detailed in 3.2.1.3 Boot Sequence.

3.2.1.3 Boot Sequence

Since the ARM7EJ-S core always starts to fetch instructions from the lowest memory address at 00000000h after system has been reset, the system is designed to have a dynamic mapping architecture capable of associating Boot Code, external Flash or external SRAM with the memory block 0000_0000h – 07ff_ffffh.

By default, the Boot Code is mapped onto 0000_0000h – 07ff_ffffh after a system reset. In this special boot mode, External Memory Controller does not access external memory; instead, the EMI Controller send predefined Boot Code back to the ARM7EJS-S core, which instructs the processor to execute the program in System ROM. This configuration can be changed by programming bit value of RM1 in register EMI_REMAP directly.

MT6228 system provides one boot up scheme:

- Start up system of running codes from Boot Code for factory programming or NAND flash boot.

Boot Code

The Boot Code is placed together with Memory Re-Mapping Mechanism in External Memory Controller, and comprises of just two words of instructions as shown below. A jump instruction leads the processor to run the code starting at address 48000000h where the System ROM is placed.

```
ADDRESS      BINARY CODE      ASSEMBLY
00000000h    E51FF004h        LDR PC, 0x4
00000004h    48000000h        (DATA)
```

Factory Programming

The configuration for factory programming is shown in **Figure 7**. Usually the Factory Programming Host connects with MT6228 via the UART interface. The download speed can be up to 921K bps while MCU is running at 26MHz.

After the system has reset, the Boot Code guides the processor to run the Factory Programming software placed in System ROM. Then, MT6228 starts and polls the UART1 port until valid information is detected. The first information received on the UART1 is used to configure the chip for factory programming. The Flash downloader program is then transferred into System RAM or external SRAM.

Further information is detailed in the MT6228 Software Programming Specification.

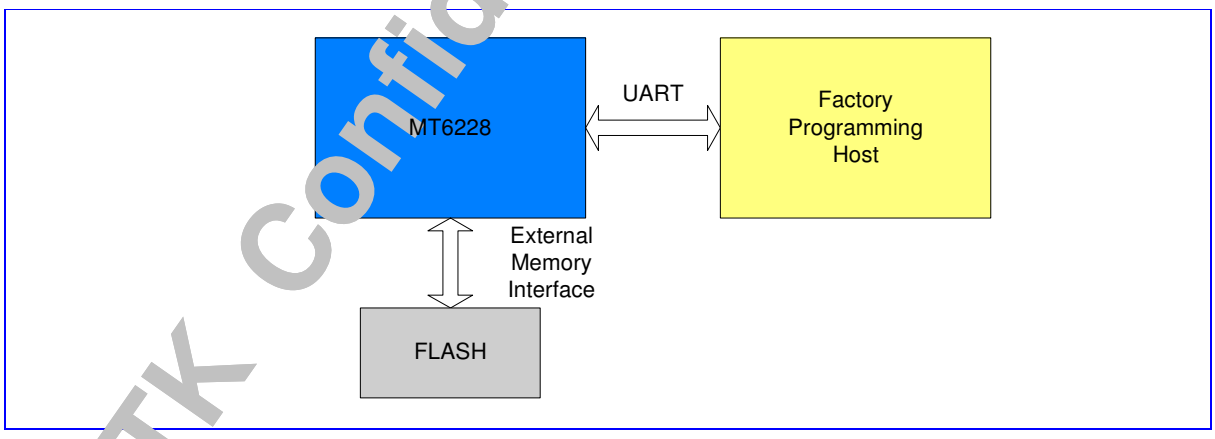

Figure 7 System configuration required for factory programming

MTK Confidential Release for Konka

NAND Flash Booting

If MT6228 cannot receive data from UART1 for a certain amount of time, the program in System ROM checks if any valid boot loader exists in NAND flash. If found, the boot loader code is copied from NAND flash to RAM (internal or external) and executed to start the real application software. If no valid boot loader can be found in NAND flash, MT6228 starts executing code in EMI bank0 memory. The whole boot sequence is shown in the following figure.

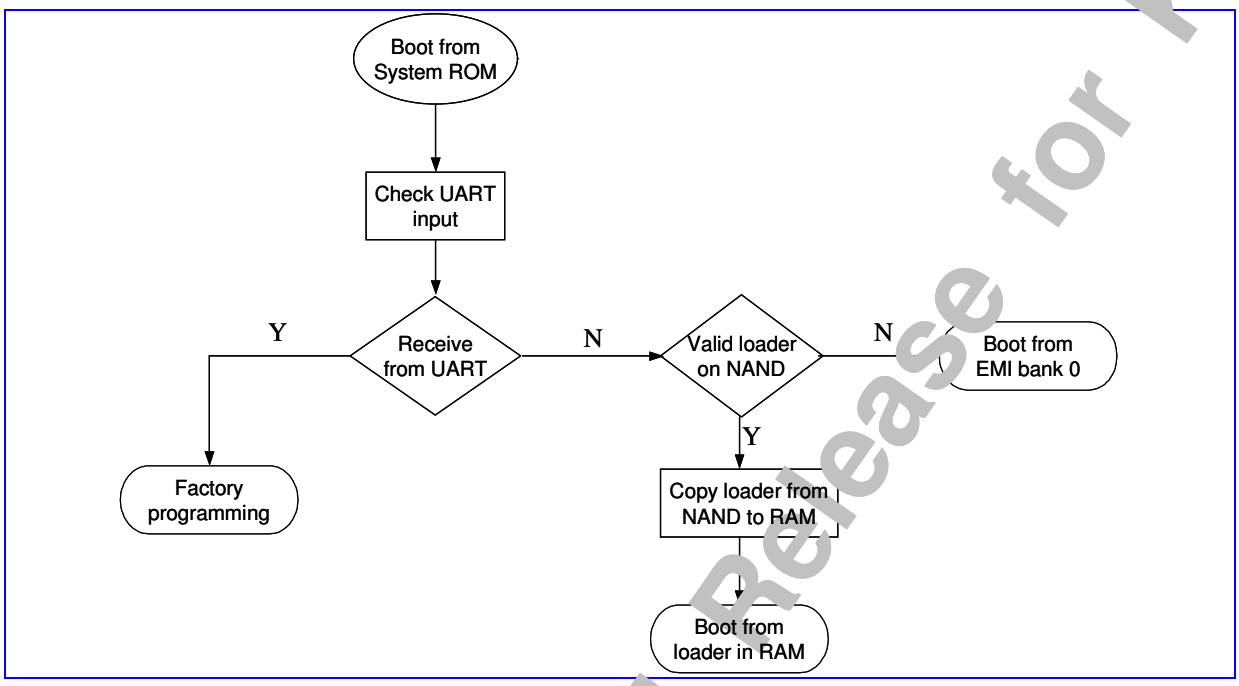

Figure 8 Boot sequence

3.2.1.4 Little Endian Mode

The MT6228 system always treats 32-bit words of memory in Little Endian format. In Little Endian mode, the lowest numbered byte in a word is stored in the least significant position, and the highest numbered byte in the most significant position. Byte 0 of the memory system is therefore connected to data lines 7 through 0.

3.3 Bus System

3.3.1 General Description

Two levels of bus hierarchy are employed in the Micro-Controller Unit Subsystem of MT6228. As depicted in **Figure 5**, AHB Bus and APB Bus serve as system backbone and peripheral buses, while an APB bridge connects these two buses. Both AHB and APB Buses operate at the same or half the clock rate of processor core.

The APB Bridge is the only bus master residing on the APB bus. All APB slaves are mapped onto memory block MB8 in the MCU 32-bit addressing space. A central address decoder is implemented inside the bridge to generate select signals for individual peripherals. In addition, since the base address of each APB slave is associated with select signals, the address bus on APB contains only the value of offset address.

The maximum address space that can be allocated to a single APB slave is 64 KB, i.e. 16-bit address lines. The width of the data bus is mainly constrained to 16 bits to minimize the design complexity and power consumption while some use 32-bit data buses to accommodate more bandwidth. In the case where an APB slave needs large amount of

MTK Confidential Release for Konka

transfers, the device driver can also request DMA channels to conduct a burst of data transfer. The base address and data width of each peripheral are listed in **Table 4**.

Base Address	Description	Data Width	Software Base ID
8000_0000h	Configuration Registers (Clock, Power Down, Version and Reset)	16	CONFG Base
8001_0000h	External Memory Interface	32	EMI Base
8002_0000h	Interrupt Controller	32	CIRQ Base
8003_0000h	DMA Controller	32	DMA Base
8004_0000h	Reset Generation Unit	16	RGU Base
8005_0000h	Data cache controller	32	DATACACHE Base
8006_0000h	GPRS Cipher Unit	32	GCU Base
8007_0000h	Software Debug	32	SWDBG Base
8008_0000h	Reserved		
8009_0000h	NAND Flash Interface	32	NFI Base
800a_0000h	Serial Camera Control Bus	16	SCCB Base
8010_0000h	General Purpose Timer	16	GPT Base
8011_0000h	Keypad Scanner	16	KP Base
8012_0000h	General Purpose Inputs/Outputs	16	GPIO Base
8013_0000h	UART 1	16	UART1 Base
8014_0000h	SIM Interface	16	SIM Base
8015_0000h	Pulse-Width Modulation Outputs	16	PWM Base
8016_0000h	Alerter Interface	16	ALTER Base
8017_0000h	Cipher Hash Engine	32	CHE Base
8018_0000h	UART 2	16	UART2 Base
8019_0000h	PPP Framer	32	PFC Base
801a_0000h	IrDA	16	IRDA Base
801b_0000h	UART 3	16	UART3 Base
801c_0000h	Base-Band to PMIC Serial Interface	16	B2PSI Base
8020_0000h	TDMA Timer	32	TDMA Base
8021_0000h	Real Time Clock	16	RTC Base
8022_0000h	Base-Band Serial Interface	32	BSI Base
8023_0000h	Base-Band Parallel Interface	16	BPI Base
8024_0000h	Automatic Frequency Control Unit	16	AFC Base
8025_0000h	Automatic Power Control Unit	32	APC Base
8026_0000h	Frame Check Sequence	16	FCS Base
8027_0000h	Auxiliary ADC Unit	16	AUXADC Base
8028_0000h	Divider/Modulus Coprocessor	32	DIVIDER Base
8029_0000h	CSD Format Conversion Coprocessor	32	CSD_ACC Base
802a_0000h	MS/SD Controller	32	MSDC Base
8030_0000h	MCU-DSP Shared Register	16	SHARE Base
8031_0000h	DSP Patch Unit	16	PATCH Base

MTK Confidential Release for Konka

8040_0000h	Audio Front End	16	AFE Base
8041_0000h	Base-Band Front End	16	BFE Base
8050_0000h	Analog Chip Interface Controller	16	MIXED Base
8060_0000h	JPEG Decoder	32	JPEG Base
8061_0000h	Post Processing Resizer	32	PRZ Base
8062_0000h	Camera Interface	32	CAM Base
8063_0000h	Image Engine	32	IMG Base
8064_0000h	PNG Decoder	32	PNGDEC Base
8065_0000h	GIF Decoder	32	GIFDEC Base
8066_0000h	2D Command Queue	32	GCMQ Base
8067_0000h	2D Accelerator	32	G2D Base
8068_0000h	MPEG4 Codec	32	MP4 Base
8069_0000h	Image DMA	32	IMGDMA Base
806a_0000h	Capture Resizer	32	CRZ Base
806b_0000h	Drop Resizer	32	DRZ Base
806c_0000h	TV Encoder	32	TVENC Base
806d_0000h	TV Controller	32	TVCON Base
806e_0000h	Graphics Memory Controller	32	GMC Base
8070_0000h	Code cache controller and MPU	32	CODECAHE Base

Table 4 Register Base Addresses for MCU Peripherals

REGISTER ADDRESS	REGISTER NAME	SYNONYM
CONFG + 0000h	Hardware Version Register	HW_VER
CONFG + 0004h	Software Version Register	SW_VER
CONFG + 0008h	Hardware Code Register	HW_CODE
CONFG + 0404h	APB Bus Control Register	APB_CON

Table 5 APB Bridge Register Map

3.3.2 Register Definitions

CONFG+0000h Hardware Version Register HW_VERSION

Bit	15	14	13	12	11	10	9	8	7	6	5	4	3	2	1	0
Name	EXTP				MAJREV				MINREV							
Type	RO				RO				RO				RO			
Reset	8				A				0				0			

This register is used by software to determine the hardware version of the chip. The register contains a new value whenever each metal fix or major step is performed. All values are incremented by a step of 1.

MINREV Minor Revision of the chip

MAJREV Major Revision of the chip

EXTP This field shows the existence of Hardware Code Register that presents the Hardware ID while the value is other than zero.

MTK Confidential Release for Konka

CONFG+0004h Software Version Register SW_VERSION

Bit	15	14	13	12	11	10	9	8	7	6	5	4	3	2	1	0
Name	EXTP				MAJREV				MINREV							
Type	RO				RO				RO				RO			
Reset	8				A				0				0			

This register is used by software to determine the software version used with this chip. All values are incremented by a step of 1.

MINREV Minor Revision of the Software

MAJREV Major Revision of the Software

EXTP This field shows the existence of Software Code Register that presents the Software ID when the value is other than zero.

CONFG+0008h Hardware Code Register HW_CODE

Bit	15	14	13	12	11	10	9	8	7	6	5	4	3	2	1	0
Name	CODE3				CODE2				CODE1				CODE0			
Type	RO				RO				RO				RO			
Reset	6				2				2				8			

This register presents the Hardware ID.

CODE This version of chip is coded as 6228h.

CONFG+0400h APB Bus Control Register APB_CON

Bit	15	14	13	12	11	10	9	8	7	6	5	4	3	2	1	0
Name		APBW6		APBW4	APBW3	APBW2	APBW1	APBW0		APBR6		APBR4	APBR3	APBR2	APBR1	APBR0
Type		R/W		R/W	R/W	R/W	R/W	R/W		R/W		R/W	R/W	R/W	R/W	R/W
Reset		0		0	0	0	0	0		1		1	1	1	1	1

This register is used to control the timing of Read Cycle and Write Cycle on APB Bus. Note that APB Bridge 5 is different from other bridges: the access time is varied, and access is not complete until an acknowledge signal from APB slave is asserted.

APBR0-APBR6 Read Access Time on APB Bus

- **0** 1-Cycle Access
- **1** 2-Cycle Access

APBW0-APBW6 Write Access Time on APB Bus

- **0** 1-Cycle Access
- **1** 2-Cycle Access

MTK Confidential Release for Konka

3.4 Direct Memory Access

3.4.1 General Description

A generic DMA Controller is placed on Layer 2 AHB Bus to support fast data transfers and to off-load the processor. With this controller, specific devices on AHB or APB buses can benefit greatly from quick completion of data movement from or to memory modules such as Internal System RAM or External SRAM. Such Generic DMA Controller can also be used to connect any two devices other than memory module as long as they can be addressed in memory space.

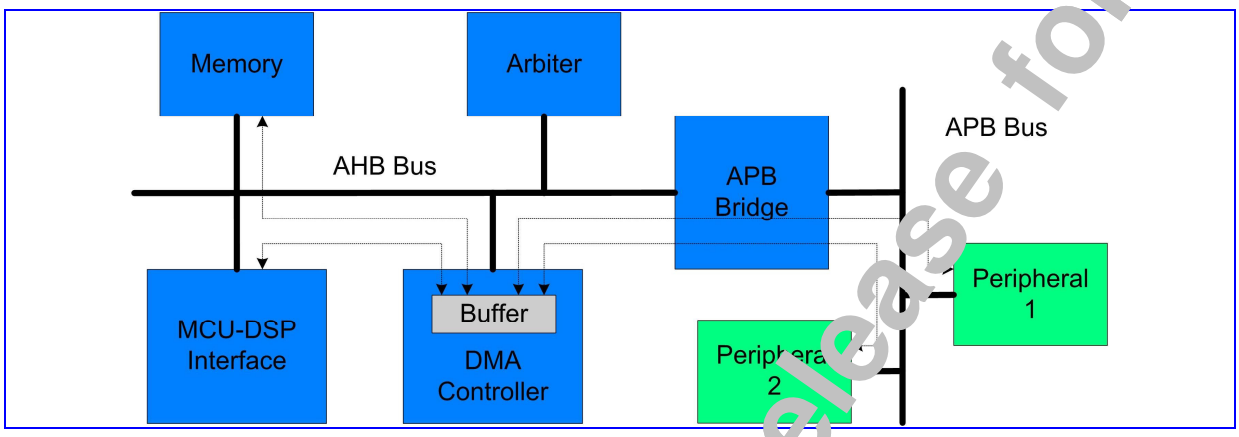

Figure 9 Variety Data Paths of DMA Transfers

Up to fourteen channels of simultaneous data transfers are supported. Each channel has a similar set of registers to be configured to different scheme as desired. If more than fourteen devices are requesting the DMA resources at the same time, software based arbitration should be employed. Once the service candidate is decided, the responsible device driver should configure the Generic DMA Controller properly in order to conduct DMA transfers. Both Interrupt and Polling based schemes in handling the completion event are supported. The block diagram of such generic DMA Controller is illustrated in **Figure 10**.

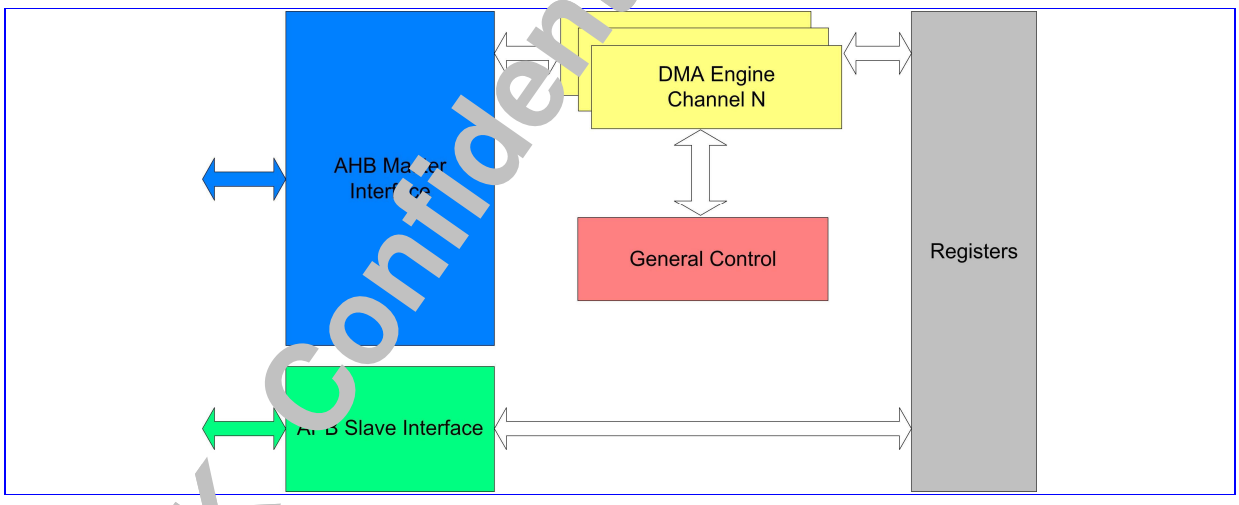

Figure 10 Block Diagram of Direct memory Access Module

MTK Confidential Release for Konka

3.4.1.1 Full-Size & Half-Size DMA Channels

There are three types of DMA channels in the DMA controller. The first one is called a full-size DMA channel, the second one is called a half-size DMA channel, and the last is Virtual FIFO DMA. Channels 1 through 3 are full-size DMA channels; channels 4 through 10 are half-size ones; and channels 11 through 14 are Virtual FIFO DMAs. The difference between the first two types of DMA channels is that both source and destination address are programmable in full-size DMA channels, but only the address of one side can be programmed in half-size DMA channel. In half-size channels, only either the source or destination address can be programmed, while the addresses of the other side is preset. Which preset address is used depends on the setting of MAS in DMA Channel Control Register. Refer to the Register Definition section for more detail.

3.4.1.2 Ring Buffer & Double Buffer Memory Data Movement

DMA channels 1 through 10 support ring-buffer and double-buffer memory data movement. This can be achieved by programming DMA_WPPT and DMA_WPTO, as well as setting WPEN in DMA_CON register to enable. **Figure 11** illustrates how this function works. Once the transfer counter reaches the value of WPPT, the next address jumps to the WPTO address after completing the WPPT data transfer. Note that only one side can be configured as ring-buffer or double-buffer memory, and this is controlled by WPSD in DMA_CON register.

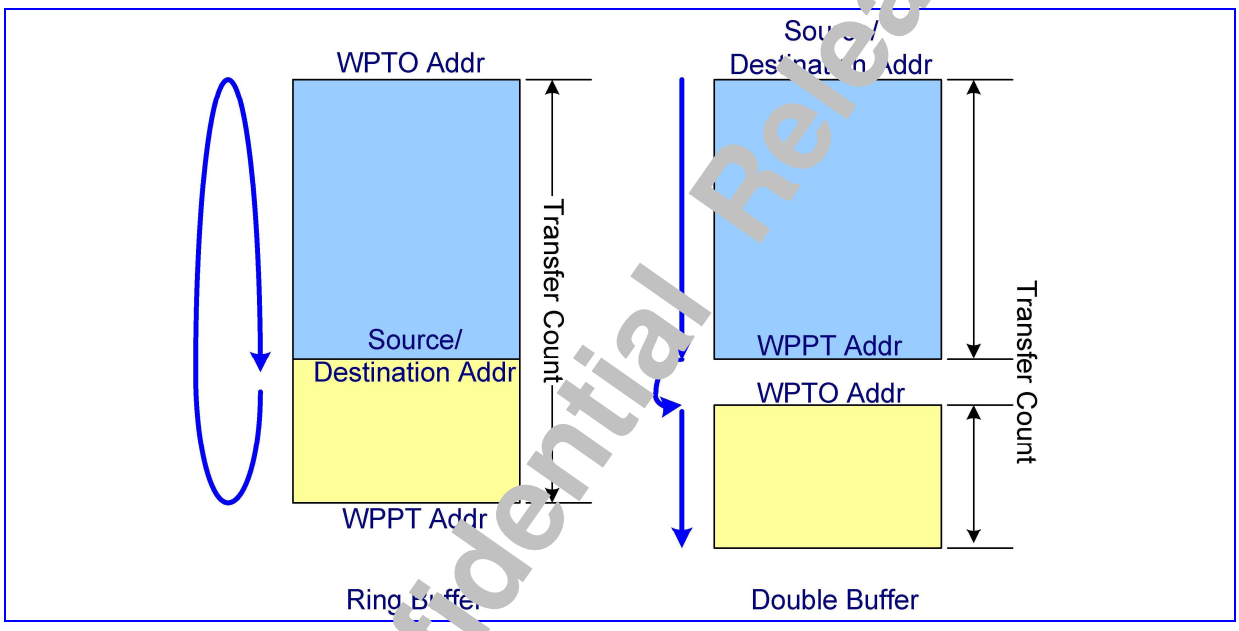

Figure 11 Ring Buffer and Double Buffer Memory Data Movement

3.4.1.3 Unaligned Word Access

The address of word access on AHB bus must be aligned to word boundary, or the 2 LSB is truncated to 00b. If programmers do not notice this, it may cause an incorrect data fetch. In the case where data is to be moved from unaligned addresses to aligned addresses, the word is usually first split into four bytes and then moved byte by byte. This results in four read and four write transfers on the bus.

To improve bus efficiency, unaligned-word access is provided in DMA4~10. While this function is enabled, DMAs move data from unaligned address to aligned address by executing four continuous byte-read access and one word-write access, reducing the number of transfers on the bus by three.

MTK Confidential Release for Konka

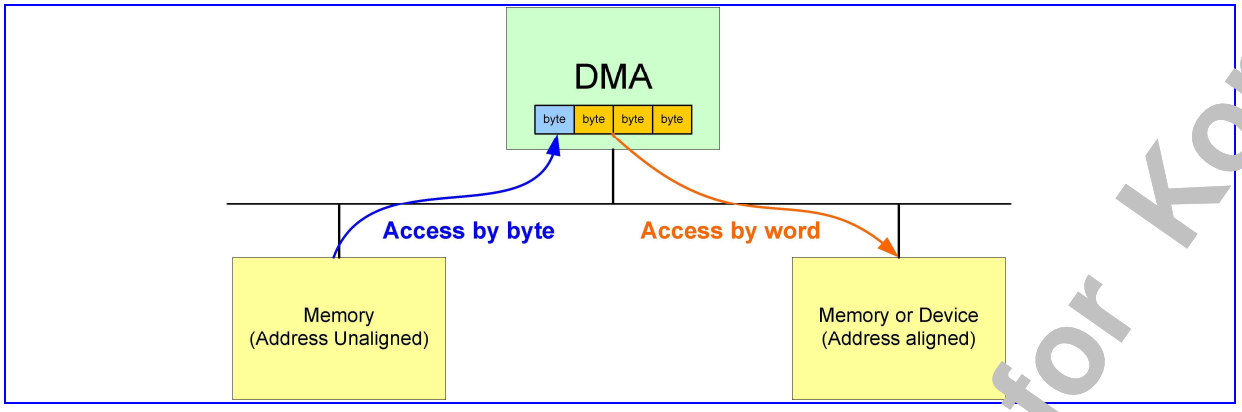

Figure 12 Unaligned Word Accesses

3.4.1.4 Virtual FIFO DMA

Virtual FIFO DMA is used to ease UART control. The difference between the Virtual FIFO DMAs and the ordinary DMAs is that Virtual FIFO DMA contains additional FIFO controller. The read and write pointers are kept in the Virtual FIFO DMA. During a read from the FIFO, the read pointer points to the address of the next data. During a write to the FIFO, the write pointer moves to the next address. If the FIFO is empty, a FIFO read is not allowed. Similarly, data is not written into the FIFO if the FIFO is full. Due to UART flow control requirements, an alert length is programmed. Once the FIFO Space is less than this value, an alert signal is issued to enable UART flow control. The type of flow control performed depends on the setting in UART.

Each Virtual FIFO DMA can be programmed as RX or TX FIFO. This depends on the setting of DIR in DMA_CON register. If DIR is "0"(READ), it means TX FIFO. On the other hand, if DIR is "1"(WRITE), the Virtual FIFO DMA is specified as a RX FIFO.

Virtual FIFO DMA provides an interrupt to MCU. This interrupt informs MCU that there is data in the FIFO, and the amount of data is over or under the value defined in DMA_COUNT register. With this, MCU does not need to poll DMA to know when data must be removed from or put into the FIFO.

Note that Virtual FIFO DMAs cannot be used as generic DMAs, i.e. DMA1~10.

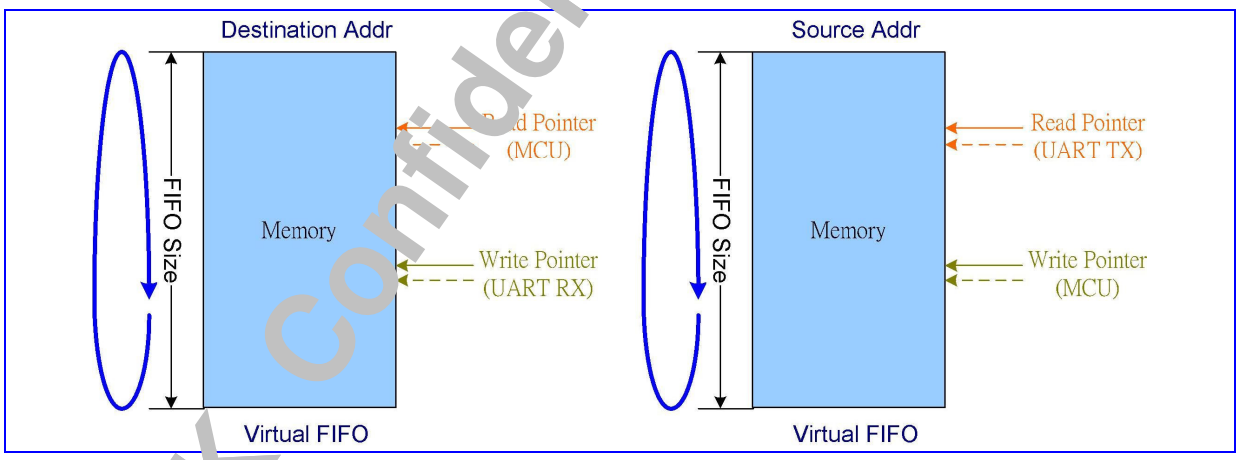

Figure 13 Virtual FIFO DMA

DMA number	Address of Virtual FIFO Access Port	Associated UART
DMA11	7800_0000h	UART1 RX / ALL UART TX

MTK Confidential Release for Konka

DMA12	7800_0100h	UART2 RX / ALL UART TX
DMA13	7800_0200h	UART3 RX / ALL UART TX
DMA14	7800_0300h	ALL UART TX

Table 6 Virtual FIFO Access Port

DMA number	Type	Ring Buffer	Two Buffer	Burst Mode	Unaligned Word Access
DMA1	Full Size	●	●	●	
DMA2	Full Size	●	●	●	
DMA3	Full Size	●	●	●	
DMA4	Half Size	●	●	●	●
DMA5	Half Size	●	●	●	●
DMA6	Half Size	●	●	●	●
DMA7	Half Size	●	●	●	●
DMA8	Half Size	●	●	●	●
DMA9	Half Size	●	●	●	●
DMA10	Half Size	●	●	●	●
DMA11	Virtual FIFO	●			
DMA12	Virtual FIFO	●			
DMA13	Virtual FIFO	●			
DMA14	Virtual FIFO	●			

Table 7 Function List of DMA channels

REGISTER ADDRESS	REGISTER NAME	SYNONYM
DMA + 0000h	DMA Global Status Register	DMA_GLBSTA
DMA + 0028h	DMA Global Bandwidth Limiter Register	DMA_GLBLIMITER
DMA + 0100h	DMA Channel 1 Source Address Register	DMA1_SRC
DMA + 0104h	DMA Channel 1 Destination Address Register	DMA1_DST
DMA + 0108h	DMA Channel 1 Wrap Point Address Register	DMA1_WPPT
DMA + 010Ch	DMA Channel 1 Wrap To Address Register	DMA1_WPTO
DMA + 0110h	DMA Channel 1 Transfer Count Register	DMA1_COUNT
DMA + 0114h	DMA Channel 1 Control Register	DMA1_CON
DMA + 0118h	DMA Channel 1 Start Register	DMA1_START
DMA + 011Ch	DMA Channel 1 Interrupt Status Register	DMA1_INTSTA
DMA + 0120h	DMA Channel 1 Interrupt Acknowledge Register	DMA1_ACKINT
DMA + 0124h	DMA Channel 1 Remaining Length of Current Transfer	DMA1_RLCT
DMA + 0128h	DMA Channel 1 Bandwidth Limiter Register	DMA1_LIMITER
DMA + 0200h	DMA Channel 2 Source Address Register	DMA2_SRC
DMA + 0204h	DMA Channel 2 Destination Address Register	DMA2_DST
DMA + 0208h	DMA Channel 2 Wrap Point Address Register	DMA2_WPPT
DMA + 020Ch	DMA Channel 2 Wrap To Address Register	DMA2_WPTO
DMA + 0210h	DMA Channel 2 Transfer Count Register	DMA2_COUNT
DMA + 0214h	DMA Channel 2 Control Register	DMA2_CON

MTK Confidential Release for Konka

DMA + 0218h	DMA Channel 2 Start Register	DMA2_START
DMA + 021Ch	DMA Channel 2 Interrupt Status Register	DMA2_INTSTA
DMA + 0220h	DMA Channel 2 Interrupt Acknowledge Register	DMA2_ACKINT
DMA + 0224h	DMA Channel 2 Remaining Length of Current Transfer	DMA2_RLCT
DMA + 0228h	DMA Channel 2 Bandwidth Limiter Register	DMA2_LIMITER
DMA + 0300h	DMA Channel 3 Source Address Register	DMA3_SRC
DMA + 0304h	DMA Channel 3 Destination Address Register	DMA3_DST
DMA + 0308h	DMA Channel 3 Wrap Point Address Register	DMA3_WPPT
DMA + 030Ch	DMA Channel 3 Wrap To Address Register	DMA3_WPTO
DMA + 0310h	DMA Channel 3 Transfer Count Register	DMA3_COUNT
DMA + 0314h	DMA Channel 3 Control Register	DMA3_CON
DMA + 0318h	DMA Channel 3 Start Register	DMA3_START
DMA + 031Ch	DMA Channel 3 Interrupt Status Register	DMA3_INTSTA
DMA + 0320h	DMA Channel 3 Interrupt Acknowledge Register	DMA3_ACKINT
DMA + 0324h	DMA Channel 3 Remaining Length of Current Transfer	DMA3_RLCT
DMA + 0328h	DMA Channel 3 Bandwidth Limiter Register	DMA3_LIMITER
DMA + 0408h	DMA Channel 4 Wrap Point Address Register	DMA4_WPPT
DMA + 040Ch	DMA Channel 4 Wrap To Address Register	DMA4_WPTO
DMA + 0410h	DMA Channel 4 Transfer Count Register	DMA4_COUNT
DMA + 0414h	DMA Channel 4 Control Register	DMA4_CON
DMA + 0418h	DMA Channel 4 Start Register	DMA4_START
DMA + 041Ch	DMA Channel 4 Interrupt Status Register	DMA4_INTSTA
DMA + 0420h	DMA Channel 4 Interrupt Acknowledge Register	DMA4_ACKINT
DMA + 0424h	DMA Channel 4 Remaining Length of Current Transfer	DMA4_RLCT
DMA + 0428h	DMA Channel 4 Bandwidth Limiter Register	DMA4_LIMITER
DMA + 042Ch	DMA Channel 4 Programmable Address Register	DMA4_PGMADDR
DMA + 0508h	DMA Channel 5 Wrap Point Address Register	DMA5_WPPT
DMA + 050Ch	DMA Channel 5 Wrap To Address Register	DMA5_WPTO
DMA + 0510h	DMA Channel 5 Transfer Count Register	DMA5_COUNT
DMA + 0514h	DMA Channel 5 Control Register	DMA5_CON
DMA + 0518h	DMA Channel 5 Start Register	DMA5_START
DMA + 051Ch	DMA Channel 5 Interrupt Status Register	DMA5_INTSTA
DMA + 0520h	DMA Channel 5 Interrupt Acknowledge Register	DMA5_ACKINT
DMA + 0524h	DMA Channel 5 Remaining Length of Current Transfer	DMA5_RLCT
DMA + 0528h	DMA Channel 5 Bandwidth Limiter Register	DMA5_LIMITER
DMA + 052Ch	DMA Channel 5 Programmable Address Register	DMA5_PGMADDR
DMA + 0608h	DMA Channel 6 Wrap Point Address Register	DMA6_WPPT
DMA + 060Ch	DMA Channel 6 Wrap To Address Register	DMA6_WPTO
DMA + 0610h	DMA Channel 6 Transfer Count Register	DMA6_COUNT
DMA + 0614h	DMA Channel 6 Control Register	DMA6_CON
DMA + 0618h	DMA Channel 6 Start Register	DMA6_START
DMA + 061Ch	DMA Channel 6 Interrupt Status Register	DMA6_INTSTA

MTK Confidential Release for Konka

DMA + 0620h	DMA Channel 6 Interrupt Acknowledge Register	DMA6_ACKINT
DMA + 0624h	DMA Channel 6 Remaining Length of Current Transfer	DMA6_RLCT
DMA + 0628h	DMA Channel 6 Bandwidth Limiter Register	DMA6_LIMITER
DMA + 062Ch	DMA Channel 6 Programmable Address Register	DMA6_PGMADDR
DMA + 0708h	DMA Channel 7 Wrap Point Address Register	DMA7_WPPT
DMA + 070Ch	DMA Channel 7 Wrap To Address Register	DMA7_WPTO
DMA + 0710h	DMA Channel 7 Transfer Count Register	DMA7_COUNT
DMA + 0714h	DMA Channel 7 Control Register	DMA7_CON
DMA + 0718h	DMA Channel 7 Start Register	DMA7_START
DMA + 071Ch	DMA Channel 7 Interrupt Status Register	DMA7_INTSTA
DMA + 0720h	DMA Channel 7 Interrupt Acknowledge Register	DMA7_ACKINT
DMA + 0724h	DMA Channel 7 Remaining Length of Current Transfer	DMA7_RLCT
DMA + 0728h	DMA Channel 7 Bandwidth Limiter Register	DMA7_LIMITER
DMA + 072Ch	DMA Channel 7 Programmable Address Register	DMA7_PGMADDR
DMA + 0808h	DMA Channel 8 Wrap Point Address Register	DMA8_WPPT
DMA + 080Ch	DMA Channel 8 Wrap To Address Register	DMA8_WPTO
DMA + 0810h	DMA Channel 8 Transfer Count Register	DMA8_COUNT
DMA + 0814h	DMA Channel 8 Control Register	DMA8_CON
DMA + 0818h	DMA Channel 8 Start Register	DMA8_START
DMA + 081Ch	DMA Channel 8 Interrupt Status Register	DMA8_INTSTA
DMA + 0820h	DMA Channel 8 Interrupt Acknowledge Register	DMA8_ACKINT
DMA + 0824h	DMA Channel 8 Remaining Length of Current Transfer	DMA8_RLCT
DMA + 0828h	DMA Channel 8 Bandwidth Limiter Register	DMA8_LIMITER
DMA + 082Ch	DMA Channel 8 Programmable Address Register	DMA8_PGMADDR
DMA + 0908h	DMA Channel 9 Wrap Point Address Register	DMA9_WPPT
DMA + 090Ch	DMA Channel 9 Wrap To Address Register	DMA9_WPTO
DMA + 0910h	DMA Channel 9 Transfer Count Register	DMA9_COUNT
DMA + 0914h	DMA Channel 9 Control Register	DMA9_CON
DMA + 0918h	DMA Channel 9 Start Register	DMA9_START
DMA + 091Ch	DMA Channel 9 Interrupt Status Register	DMA9_INTSTA
DMA + 0920h	DMA Channel 9 Interrupt Acknowledge Register	DMA9_ACKINT
DMA + 0924h	DMA Channel 9 Remaining Length of Current Transfer	DMA9_RLCT
DMA + 0928h	DMA Channel 9 Bandwidth Limiter Register	DMA9_LIMITER
DMA + 092Ch	DMA Channel 9 Programmable Address Register	DMA9_PGMADDR
DMA + 0A08h	DMA Channel 10 Wrap Point Address Register	DMA10_WPPT
DMA + 0A0Ch	DMA Channel 10 Wrap To Address Register	DMA10_WPTO
DMA + 0A10h	DMA Channel 10 Transfer Count Register	DMA10_COUNT
DMA + 0A14h	DMA Channel 10 Control Register	DMA10_CON
DMA + 0A18h	DMA Channel 10 Start Register	DMA10_START
DMA + 0A1Ch	DMA Channel 10 Interrupt Status Register	DMA10_INTSTA
DMA + 0A20h	DMA Channel 10 Interrupt Acknowledge Register	DMA10_ACKINT
DMA + 0A24h	DMA Channel 10 Remaining Length of Current Transfer	DMA10_RLCT

MTK Confidential Release for Konka

DMA + 0A28h	DMA Channel 10 Bandwidth Limiter Register	DMA10_LIMITER
DMA + 0A2Ch	DMA Channel 10 Programmable Address Register	DMA10_PGMADDR
DMA + 0B10h	DMA Channel 11 Transfer Count Register	DMA11_COUNT
DMA + 0B14h	DMA Channel 11 Control Register	DMA11_CON
DMA + 0B18h	DMA Channel 11 Start Register	DMA11_START
DMA + 0B1Ch	DMA Channel 11 Interrupt Status Register	DMA11_INTSTA
DMA + 0B20h	DMA Channel 11 Interrupt Acknowledge Register	DMA11_ACKINT
DMA + 0B28h	DMA Channel 11 Bandwidth Limiter Register	DMA11_LIMITER
DMA + 0B2Ch	DMA Channel 11 Programmable Address Register	DMA11_PGMADDR
DMA + 0B30h	DMA Channel 11 Write Pointer	DMA11_WRPTR
DMA + 0B34h	DMA Channel 11 Read Pointer	DMA11_RDPTR
DMA + 0B38h	DMA Channel 11 FIFO Count	DMA11_FFCNT
DMA + 0B3Ch	DMA Channel 11 FIFO Status	DMA11_FFSTA
DMA + 0B40h	DMA Channel 11 Alert Length	DMA11_ALTLEN
DMA + 0B44h	DMA Channel 11 FIFO Size	DMA11_FFSIZE
DMA + 0C10h	DMA Channel 12 Transfer Count Register	DMA12_COUNT
DMA + 0C14h	DMA Channel 12 Control Register	DMA12_CON
DMA + 0C18h	DMA Channel 12 Start Register	DMA12_START
DMA + 0C1Ch	DMA Channel 12 Interrupt Status Register	DMA12_INTSTA
DMA + 0C20h	DMA Channel 12 Interrupt Acknowledge Register	DMA12_ACKINT
DMA + 0C28h	DMA Channel 12 Bandwidth Limiter Register	DMA12_LIMITER
DMA + 0C2Ch	DMA Channel 12 Programmable Address Register	DMA12_PGMADDR
DMA + 0C30h	DMA Channel 12 Write Pointer	DMA12_WRPTR
DMA + 0C34h	DMA Channel 12 Read Pointer	DMA12_RDPTR
DMA + 0C38h	DMA Channel 12 FIFO Count	DMA12_FFCNT
DMA + 0C3Ch	DMA Channel 12 FIFO Status	DMA12_FFSTA
DMA + 0C40h	DMA Channel 12 Alert Length	DMA12_ALTLEN
DMA + 0C44h	DMA Channel 12 FIFO Size	DMA12_FFSIZE
DMA + 0D10h	DMA Channel 13 Transfer Count Register	DMA13_COUNT
DMA + 0D14h	DMA Channel 13 Control Register	DMA13_CON
DMA + 0D18h	DMA Channel 13 Start Register	DMA13_START
DMA + 0D1Ch	DMA Channel 13 Interrupt Status Register	DMA13_INTSTA
DMA + 0D20h	DMA Channel 13 Interrupt Acknowledge Register	DMA13_ACKINT
DMA + 0D28h	DMA Channel 13 Bandwidth Limiter Register	DMA13_LIMITER
DMA + 0D2Ch	DMA Channel 13 Programmable Address Register	DMA13_PGMADDR
DMA + 0D30h	DMA Channel 13 Write Pointer	DMA13_WRPTR
DMA + 0D34h	DMA Channel 13 Read Pointer	DMA13_RDPTR
DMA + 0D38h	DMA Channel 13 FIFO Count	DMA13_FFCNT
DMA + 0D3Ch	DMA Channel 13 FIFO Status	DMA13_FFSTA
DMA + 0D40h	DMA Channel 13 Alert Length	DMA13_ALTLEN
DMA + 0D44h	DMA Channel 13 FIFO Size	DMA13_FFSIZE
DMA + 0E10h	DMA Channel 14 Transfer Count Register	DMA14_COUNT

MTK Confidential Release for Konka

DMA + 0E14h	DMA Channel 14 Control Register	DMA14_CON
DMA + 0E18h	DMA Channel 14 Start Register	DMA14_START
DMA + 0E1Ch	DMA Channel 14 Interrupt Status Register	DMA14_INTSTA
DMA + 0E20h	DMA Channel 14 Interrupt Acknowledge Register	DMA14_ACKINT
DMA + 0E28h	DMA Channel 14 Bandwidth Limiter Register	DMA14_LIMITER
DMA + 0E2Ch	DMA Channel 14 Programmable Address Register	DMA14_PGMADDR
DMA + 0E30h	DMA Channel 14 Write Pointer	DMA14_WRPTR
DMA + 0E34h	DMA Channel 14 Read Pointer	DMA14_RDPTR
DMA + 0E38h	DMA Channel 14 FIFO Count	DMA14_FFCNT
DMA + 0E3Ch	DMA Channel 14 FIFO Status	DMA14_FFSTA
DMA + 0E40h	DMA Channel 14 Alert Length	DMA14_ALTLEN
DMA + 0E44h	DMA Channel 14 FIFO Size	DMA14_FFSIZE

Table 8 DMA Controller Register Map

3.4.2 Register Definitions

Register programming tips:

- Start registers shall be cleared, when associated channels are being programmed.
- PGMADDR, i.e. programmable address, only exists in half-size DMA channels. If DIR in Control Register is high, PGMADDR represents Destination Address. Conversely, If DIR in Control Register is low, PGMADDR represents Source Address.
- Functions of ring-buffer and double-buffer memory data movement can be activated on either source side or destination side by programming DMA_WPPT & and DMA_WPTO, as well as setting WPEN in DMA_CON register high. WPSD in DMA_CON register determines the activated side.

DMA+0000h DMA Global Status Register DMA_GLBSTA

Bit	31	30	29	28	27	26	25	24	23	22	21	20	19	18	17	16
Name					IT14	RUN14	IT13	RUN13	IT12	RUN12	IT11	RUN11	IT10	RUN10	IT9	RUN9
Type					RO	RO	RO	RO	RO	RO	RO	RO	RO	RO	RO	RO
Reset					0	0	0	0	0	0	0	0	0	0	0	0
Bit	15	14	13	12	11	10	9	8	7	6	5	4	3	2	1	0
Name	IT8	RUN8	IT7	RUN7	IT6	RUN6	IT5	RUN5	IT4	RUN4	IT3	RUN3	IT2	RUN2	IT1	RUN1
Type	RO	RO	RO	RO	RO	RO	RO	RO	RO	RO	RO	RO	RO	RO	RO	RO
Reset	0	0	0	0	0	0	0	0	0	0	0	0	0	0	0	0

This register helps software program keep track of the global status of DMA channels.

RUN_N DMA channel n status

- **0** Channel n is stopped or has completed the transfer already.
- **1** Channel n is currently running.

IT_N Interrupt status for channel n

- **0** No interrupt is generated.
- **1** An interrupt is pending and waiting for service.

MTK Confidential Release for Konka

DMA+0028h DMA Global Bandwidth limiter Register DMA_GLBLIMITER

Bit	31	30	29	28	27	26	25	24	23	22	21	20	19	18	17	16
Name																
Type																
Reset																
Bit	15	14	13	12	11	10	9	8	7	6	5	4	3	2	1	0
Name									GLBLIMITER							
Type									WO							
Reset									0							

Please refer to the expression in DMAn_LIMITER for detailed note. The value of DMA_GLBLIMITER is set to all DMA channels, from 1 to 14.

DMA+0n00h DMA Channel n Source Address Register DMAn_SRC

Bit	31	30	29	28	27	26	25	24	23	22	21	20	19	18	17	16
Name	SRC[31:16]															
Type	R/W															
Reset	0															
Bit	15	14	13	12	11	10	9	8	7	6	5	4	3	2	1	0
Name	SRC[15:0]															
Type	R/W															
Reset	0															

The above registers contain the base or current source address that the DMA channel is currently operating on. Writing to this register specifies the base address of transfer source for a DMA channel. Before programming these registers, the software program should make sure that STR in DMAn_START is set to 0; that is, the DMA channel is stopped and disabled completely. Otherwise, the DMA channel may run out of order. Reading this register returns the address value from which the DMA is reading.

Note that n is from 1 to 3.

SRC **SRC**[31:0] specifies the base or current address of transfer source for a DMA channel, i.e. channel 1, 2 or 3.
WRITE Base address of transfer source
READ Address from which DMA is reading

DMA+0n04h DMA Channel n Destination Address Register DMAn_DST

Bit	31	30	29	28	27	26	25	24	23	22	21	20	19	18	17	16
Name	DST[31:16]															
Type	R/W															
Reset	0															
Bit	15	14	13	12	11	10	9	8	7	6	5	4	3	2	1	0
Name	DST[15:0]															
Type	R/W															
Reset	0															

The above registers contain the base or current destination address that the DMA channel is currently operating on.. Writing to this register specifies the base address of the transfer destination for a DMA channel. Before programming these registers, the software should make sure that STR in DMAn_START is set to '0'; that is, the DMA channel is stopped and disabled completely. Otherwise, the DMA channel may run out of order. Reading this register returns the address value to which the DMA is writing.

Note that n is from 1 to 3.

MTK Confidential Release for Konka

DST **DST**[31:0] specifies the base or current address of transfer destination for a DMA channel, i.e. channel 1, 2 or 3.

WRITE Base address of transfer destination.

READ Address to which DMA is writing.

DMA+0n08h DMA Channel n Wrap Point Count Register DMAn_WPPT

Bit	31	30	29	28	27	26	25	24	23	22	21	20	19	18	17	16
Name																
Type																
Reset																
Bit	15	14	13	12	11	10	9	8	7	6	5	4	3	2	1	0
Name	WPPT[15:0]															
Type	R/W															
Reset	0															

The above registers are to specify the transfer count required to perform before the jump point. This can be used to support ring buffer or double buffer style memory accesses. To enable this function, two control bits, WPEN and WPSD, in DMA control register must be programmed. See the following register description for more details. If the transfercounter in the DMA engine matches this value, an address jump occurs, and the next address is the address specified in DMAn_WPTO. Before programming these registers, the software should make sure that STR in DMAn_START is set to '0', that is the DMA channel is stopped and disabled completely. Otherwise, the DMA channel may run out of order. To enable this function, WPEN in DMA_CON is set.

Note that n is from 1 to 10.

WPPT **WPPT**[15:0] specifies the amount of the transfer count from start to jumping point for a DMA channel, i.e. channel 1 – 10.

WRITE Address of the jump point.

READ Value set by the programmer.

DMA+0n0Ch DMA Channel n Wrap To Address Register DMAn_WPTO

Bit	31	30	29	28	27	26	25	24	23	22	21	20	19	18	17	16
Name	WPTO[31:16]															
Type	R/W															
Reset	0															
Bit	15	14	13	12	11	10	9	8	7	6	5	4	3	2	1	0
Name	WPTO[15:0]															
Type	R/W															
Reset	0															

The above registers specify the address of the jump destination of a given DMA transfer to support ring buffer or double buffer style memory accesses. To enable this function, set the two control bits, WPEN and WPSD, in the DMA control register . See the following register description for more details. Before programming these registers, the software should make sure that STR in DMAn_START is set to '0', that is the DMA channel is stopped and disabled completely. Otherwise, the DMA channel may run out of order. To enable this function, WPEN in DMA_CON should be set.

Note that n is from 1 to 10.

WPTO **WPTO**[31:0] specifies the address of the jump point for a DMA channel, i.e. channel 1 – 10.

WRITE Address of the jump destination.

READ Value set by the programmer.

DMA+0n10h DMA Channel n Transfer Count Register DMAn_COUNT

Bit	31	30	29	28	27	26	25	24	23	22	21	20	19	18	17	16

MTK Confidential Release for Konka

Name																
Type																
Reset																
Bit	15	14	13	12	11	10	9	8	7	6	5	4	3	2	1	0
Name	LEN															
Type	R/W															
Reset	0															

This register specifies the amount of total transfer count that the DMA channel is required to perform. Upon completion, the DMA channel generates an interrupt request to the processor while ITEN in DMAn_CON is set as '1'. Note that the total size of data being transferred by a DMA channel is determined by LEN together with the SIZE in DMAn_CON, i.e. LEN x SIZE.

For virtual FIFO DMA, this register is used to configure the RX threshold and TX threshold. Interrupt is triggered while FIFO count >= RX threshold in RX path or FIFO count =< TX threshold in TX path. Note that ITEN bit in DMA_CON register shall be set, or no interrupt is issued.

Note that n is from 1 to 14.

LEN The amount of total transfer count

DMA+0n14h DMA Channel n Control Register DMAn_CON

Bit	31	30	29	28	27	26	25	24	23	22	21	20	19	18	17	16
Name								MAS						DIR	WPEN	WPSD
Type								R/W						R/W	R/W	R/W
Reset								0						0	0	0
Bit	15	14	13	12	11	10	9	8	7	6	5	4	3	2	1	0
Name	ITEN					BURST					B2W	DRQ	DINC	SINC	SIZE	
Type	R/W					R/W					R/W	R/W	R/W	R/W	R/W	
Reset	0					0					0	0	0	0	0	

This register contains all the available control schemes for a DMA channel that is ready for software programmer to configure. Note that all these fields cannot be changed while DMA transfer is in progress or an unexpected situation may occur.

Note that n is from 1 to 14.

SIZE Data size within the confine of a bus cycle per transfer.
These bits confines the data transfer size between source and destination to the specified value for individual bus cycle. The size is in terms of byte and has maximum value of 4 bytes. It is mainly decided by the data width of a DMA master.

00 Byte transfer/1 byte
01 Half-word transfer/2 bytes
10 Word transfer/4 bytes
11 Reserved

SINC Incremental source address. Source addresses increase every transfer. If the setting of SIZE is Byte, Source addresses increase by 1 every single transfer. If Half-Word, increase by 2; and if Word, increase by 4.

0 Disable
1 Enable

DINC Incremental destination address. Destination addresses increase every transfer. If the setting of SIZE is Byte, Destination addresses increase by 1 every single transfer. If Half-Word, increase by 2; and Iif Word, increase by 4.

0 Disable
1 Enable

MTK Confidential Release for Konka

DREQ Throttle and handshake control for DMA transfer

0 No throttle control during DMA transfer or transfers occurred only between memories

1 Hardware handshake management

The DMA master is able to throttle down the transfer rate by way of request-grant handshake.

B2W Word to Byte or Byte to Word transfer for the applications of transferring non-word-aligned-address data to word-aligned-address data. Note that BURST is set to 4-beat burst while enabling this function, and the SIZE is set to Byte.

NO effect on channel 1 – 3 & 11 - 14.

0 Disable

1 Enable

BURST Transfer Type. Burst-type transfers have better bus efficiency. Mass data movement is recommended to use this kind of transfer. However, note that burst-type transfer does not stop until all of the beats in a burst are completed or transfer length is reached. FIFO threshold of peripherals must be configured carefully while being used to move data from/to the peripherals.

What transfer type can be used is restricted by the SIZE. If SIZE is 00b, i.e. byte transfer, all of the four transfer types can be used. If SIZE is 01b, i.e. half-word transfer, 16-beat incrementing burst cannot be used. If SIZE is 10b, i.e. byte transfer, only single and 4-beat incrementing burst can be used.

NO effect on channel 11 - 14.

000 Single

001 Reserved

010 4-beat incrementing burst

011 Reserved

100 8-beat incrementing burst

101 Reserved

110 16-beat incrementing burst

111 Reserved

ITEN DMA transfer completion interrupt enable.

0 Disable

1 Enable

WPSD The side using address-wrapping function. Only one side of a DMA channel can activate address-wrapping function at a time.

NO effect on channel 11 - 14.

0 Address-wrapping on source .

1 Address-wrapping on destination.

WPEN Address-wrapping for ring buffer. The next address of DMA jumps to WRAP TO address when the current address matches WRAP POINT count.

NO effect on channel 11 - 14.

0 Disable

1 Enable

DIR Directions of DMA transfer for half-size and Virtual FIFO DMA channels, i.e. channels 4~14. The direction is from the perspective of the DMA masters. WRITE means read from master and then write to the address specified in DMA_PGMADDR, and vice versa.

NO effect on channel 1 - 3.

0 Read

1 Write

MTK Confidential Release for Konka

MAS Master selection. Specifies which master occupies this DMA channel. Once assigned to certain master, the corresponding DREQ and DACK are connected. For half-size and Virtual FIFO DMA channels, i.e. channels 4 ~ 14, a predefined address is assigned as well.

- **00000** SIM
- **00001** MSDC
- **00010** IrDA TX
- **00011** IrDA RX
- **00100** USB1 Write
- **00101** USB1 Read
- **00110** USB2 Write
- **00111** USB2 Read
- **01000** UART1 TX
- **01001** UART1 RX
- **01010** UART2 TX
- **01011** UART2 RX
- **01100** UART3 TX
- **01101** UART3 RX
- **01110** DSP-DMA
- **01111** NFI TX
- **10000** NFI RX
- **OTHERS** Reserved

DMA+0n18h DMA Channel n Start Register DMAn_START

Bit	31	30	29	28	27	26	25	24	23	22	21	20	19	18	17	16
Name																
Type																
Reset																
Bit	15	14	13	12	11	10	9	8	7	6	5	4	3	2	1	0
Name	**STR**															
Type	R/W															
Reset	0															

This register controls the activity of a DMA channel. Note that prior to setting STR to "1", all the configurations should be done by giving proper value to the registers. Note also that once the STR is set to "1", the hardware does not clear it automatically no matter if the DMA channel accomplishes the DMA transfer or not. In other works, the value of **STR** stays "1" regardless of the completion of DMA transfer. Therefore, the software program should be sure to clear **STR** to "0" before restarting another DMA transfer.

Note that n is from 1 to 14.

STR Start control for a DMA channel.

- **0** The DMA channel is stopped.
- **1** The DMA channel is started and running.

DMA+0n1Ch DMA Channel n Interrupt Status Register DMAn_INTSTA

Bit	31	30	29	28	27	26	25	24	23	22	21	20	19	18	17	16
Name																
Type																
Reset																
Bit	15	14	13	12	11	10	9	8	7	6	5	4	3	2	1	0
Name	**INT**															
Type	RO															
Reset	0															

MTK Confidential Release for Konka

This register shows the interrupt status of a DMA channel. It has the same value as DMA_GLBSTA.

Note that n is from 1 to 14.

INT Interrupt Status for DMA Channel

- **0** No interrupt request is generated.
- **1** One interrupt request is pending and waiting for service.

DMA+0n20h DMA Channel n Interrupt Acknowledge Register DMAn_ACKINT

Bit	31	30	29	28	27	26	25	24	23	22	21	20	19	18	17	16
Name																
Type																
Reset																
Bit	15	14	13	12	11	10	9	8	7	6	5	4	3	2	1	0
Name	ACK															
Type	WO															
Reset	0															

This register is used to acknowledge the current interrupt request associated with the completion event of a DMA channel by software program. Note that this is a write-only register, and any read to it returns a value of "0".

Note that n is from 1 to 14.

ACK Interrupt acknowledge for the DMA channel

- **0** No effect
- **1** Interrupt request is acknowledged and should be relinquished.

DMA+0n24h DMA Channel n Remaining Length of Current Transfer DMAn_RLCT

Bit	31	30	29	28	27	26	25	24	23	22	21	20	19	18	17	16
Name																
Type																
Reset																
Bit	15	14	13	12	11	10	9	8	7	6	5	4	3	2	1	0
Name	RLCT															
Type	RO															
Reset	0															

This register is to reflect the left amount of the transfer.

Note that n is from 1 to 10.

DMA+0n28h DMA Bandwidth limiter Register DMAn_LIMITER

Bit	31	30	29	28	27	26	25	24	23	22	21	20	19	18	17	16
Name																
Type																
Reset																
Bit	15	14	13	12	11	10	9	8	7	6	5	4	3	2	1	0
Name									LIMITER							
Type									R/W							
Reset									0							

This register is to suppress the Bus utilization of the DMA channel. The value is from 0 to 255. 0 means no limitation, and 255 means totally banned. The value between 0 and 255 means certain DMA can have permission to use AHB every (4 X n) AHB clock cycles.

MTK Confidential Release for Konka

Note that it is not recommended to limit the Bus utilization of the DMA channels because this increases the latency of response to the masters, and the transfer rate decreases as well. Before using it, programmer must make sure that the bus masters have some protective mechanism to avoid entering the wrong states.

Note that n is from 1 to 14.

LIMITER from 0 to 255. 0 means no limitation, 255 means totally banned, and others mean Bus access permission every (4 X n) AHB clock.

DMA+0n2Ch DMA Channel n Programmable Address Register DMAn_PGMADDR

Bit	31	30	29	28	27	26	25	24	23	22	21	20	19	18	17	16
Name	PGMADDR[31:16]															
Type	R/W															
Reset	0															
Bit	15	14	13	12	11	10	9	8	7	6	5	4	3	2	1	0
Name	PGMADDR[15:0]															
Type	R/W															
Reset	0															

The above registers specify the address for a half-size DMA channel. This address represents a source address if DIR in DMA_CON is set to 0, and represents a destination address if DIR in DMA_CON is set to 1. Before being able to program these register, the software should make sure that STR in DMAn_START is set to '0', that is the DMA channel is stopped and disabled completely. Otherwise, the DMA channel may run out of order.

Note that n is from 4 to 14.

PGMADDR **PGMADDR**[31:0] specifies the addresses for a half-size or a Virtual FIFO DMA channel, i.e. channel 4 – 14.

WRITE Address of the jump destination.

READ Current address of the transfer.

DMA+0n30h DMA Channel n Virtual FIFO Write Pointer Register DMAn_WRPTR

Bit	31	30	29	28	27	26	25	24	23	22	21	20	19	18	17	16
Name	WRPTR[31:16]															
Type	RO															
Bit	15	14	13	12	11	10	9	8	7	6	5	4	3	2	1	0
Name	WRPTR[15:0]															
Type	RO															

Note that n is from 11 to 14.

WRPTR Virtual FIFO Write Pointer.

DMA+0n34h DMA Channel n Virtual FIFO Read Pointer Register DMAn_RDPTR

Bit	31	30	29	28	27	26	25	24	23	22	21	20	19	18	17	16
Name	RDPTR[31:16]															
Type	RO															
Bit	15	14	13	12	11	10	9	8	7	6	5	4	3	2	1	0
Name	RDPTR[15:0]															
Type	RO															

Note that n is from 11 to 14.

RDPTR Virtual FIFO Read Pointer.

MTK Confidential Release for Konka

DMA+0n38h DMA Channel n Virtual FIFO Data Count Register DMAn_FFCNT

Bit	31	30	29	28	27	26	25	24	23	22	21	20	19	18	17	16
Name																
Type																
Bit	15	14	13	12	11	10	9	8	7	6	5	4	3	2	1	0
Name	FFCNT															
Type	RO															

Note that n is from 11 to 14.

FFCNT To display the number of data stored in FIFO. 0 means FIFO empty, and FIFO is full if FFCNT is equal to FFSIZE.

DMA+0n3Ch DMA Channel n Virtual FIFO Status Register DMAn_FFSTA

Bit	31	30	29	28	27	26	25	24	23	22	21	20	19	18	17	16
Name																
Type																
Reset																
Bit	15	14	13	12	11	10	9	8	7	6	5	4	3	2	1	0
Name														ALT	EMPTY	FULL
Type														RO	RO	RO
Reset														0	1	0

Note that n is from 11 to 14.

FULL To indicate FIFO is full.

- **0** Not Full
- **1** Full

EMPTY To indicate FIFO is empty.

- **0** Not Empty
- **1** Empty

ALT To indicate FIFO Count is larger than ALTLEN. DMA issues an alert signal to UART to enable UART flow control.

- **0** Not reach alert region.
- **1** Reach alert region.

DMA+0n40h DMA Channel n Virtual FIFO Alert Length Register DMAn_ALTLEN

Bit	31	30	29	28	27	26	25	24	23	22	21	20	19	18	17	16
Name																
Type																
Reset																
Bit	15	14	13	12	11	10	9	8	7	6	5	4	3	2	1	0
Name											ALTLEN					
Type											R/W					
Reset											0					

Note that n is from 11 to 14.

ALTLEN Specifies the Alert Length of Virtual FIFO DMA. Once the remaining FIFO space is less than ALTLEN, an alert signal is issued to UART to enable flow control. Normally, ALTLEN shall be larger than 16 for UART application.

DMA+0n44h DMA Channel n Virtual FIFO Size Register DMAn_FFSIZE

Bit	31	30	29	28	27	26	25	24	23	22	21	20	19	18	17	16

MTK Confidential Release for Konka

Name																
Type																
Reset																
Bit	15	14	13	12	11	10	9	8	7	6	5	4	3	2	1	0
Name	FFSIZE															
Type	R/W															
Reset	0															

Note that n is from 11 to 14.

FFSIZE Specifies the FIFO Size of Virtual FIFO DMA.

3.5 Interrupt Controller

3.5.1 General Description

Figure 14 outlines the major functionality of the MCU Interrupt Controller. The interrupt controller processes all interrupt sources coming from external lines and internal MCU peripherals. Since ARM7EJ-S core supports two levels of interrupt latency, this controller generates two request signals: FIQ for fast, low latency interrupt request and IRQ for more general interrupts with lower priority.

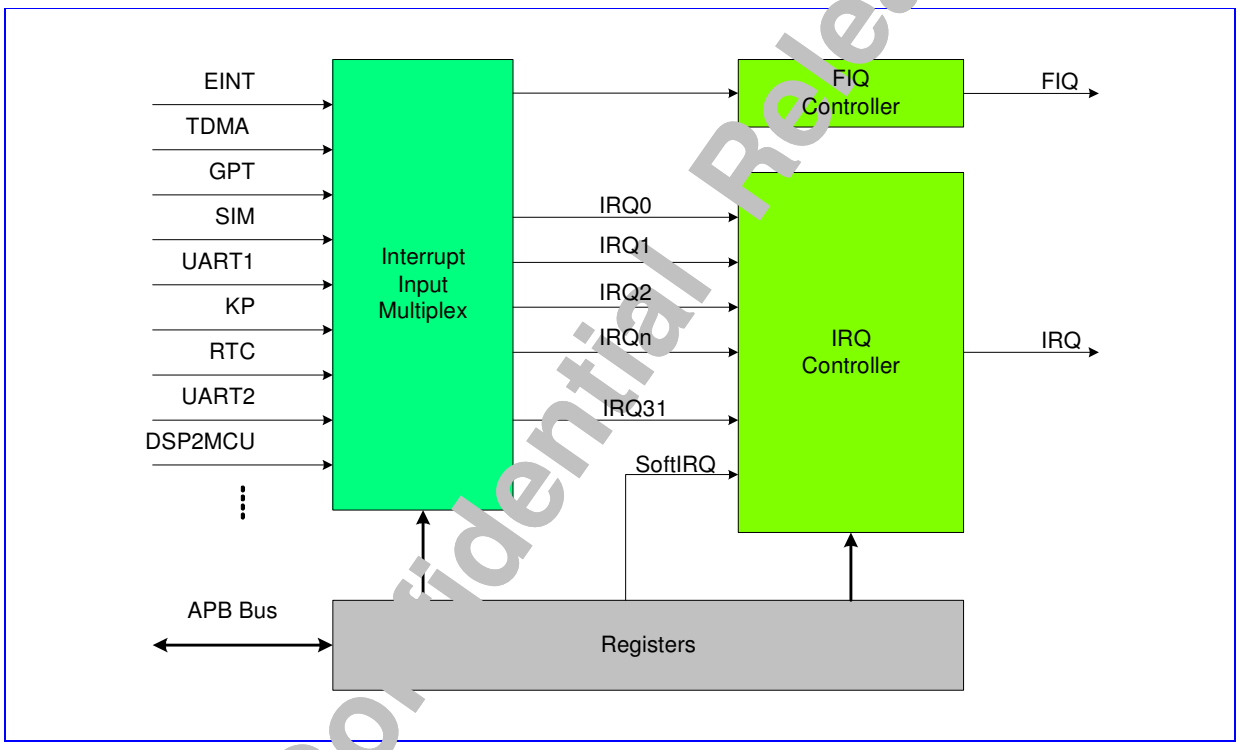

Figure 15 Block Diagram of the Interrupt Controller

One and only one of the interrupt sources can be assigned to FIQ Controller and have the highest priority in requesting timing critical service. All the others share the same IRQ signal by connecting them to IRQ Controller. The IRQ Controller manages up 32 interrupt lines of IRQ0 to IRQ31 with fixed priority in descending order.

The Interrupt Controller provides a simple software interface by mean of registers to manipulate the interrupt request shared system. IRQ Selection Registers and FIQ Selection Register determine the source priority and connecting relation among sources and interrupt lines. IRQ Source Status Register allows software program to identify the source of interrupt that generates the interrupt request. IRQ Mask Register provides software to mask out undesired sources

MTK Confidential Release for Konka

some time. End of Interrupt Register permits software program to indicate to the controller that a certain interrupt service routine has been finished.

Binary coded version of IRQ Source Status Register is also made available for software program to helpfully identify the interrupt source. Note that while taking advantage of this, it should also take the binary coded version of End of Interrupt Register coincidently.

The essential Interrupt Table of ARM7EJ-S core is shown as Table **9**.

Address	Description
00000000h	System Reset
00000018h	IRQ
0000001Ch	FIQ

Table 10 Interrupt Table of ARM7EJ-S

Interrupt Source Masking

Interrupt controller provides the function of Interrupt Source Masking by the way of programming MASK register. Any of them can be masked individually.

However, because of the bus latency, the masking takes effect no earlier than 3 clock cycles later. In this time, the to-be-masked interrupts could come in and generate an IRQ pulse to MCU, and then disappear immediately. This IRQ forces MCU going to Interrupt Service Routine and polling Status Register (IRQ_STA or IRQ_STA2), but the register shows there is no interrupt. This might cause MCU malfunction.

There are two ways for programmer to protect their software.

1. Return from ISR (Interrupt Service Routine) immediately while the Status register shows no interrupt.
2. Set I bit of MCU before doing Interrupt Masking, and then clear it after Interrupt Masking done.

Both avoid the problem, but the first item recommended to have in the ISR.

External Interrupt

This interrupt controller also integrates an External Interrupt Controller that can support up to 4 interrupt requests coming from external sources, the EINT0~3, and 4 WakeUp interrupt requests, i.e. EINT4~7, coming from peripherals used to inform system to resume the system clock.

The four external interrupts can be used for different kind of applications, mainly for event detections: detection of hand free connection, detection of hood opening, detection of battery charger connection.

Since the external event may be unstable in a certain period, a de-bounce mechanism is introduced to ensure the functionality. The circuitry is mainly used to verify that the input signal remains stable for a programmable number of periods of the clock. When this condition is satisfied, for the appearance or the disappearance of the input, the output of the de-bounce logic changes to the desired state. Note that, because it uses the 32 KHz slow clock for performing the de-bounce process, the parameter of de-bounce period and de-bounce enable takes effect no sooner than one 32 KHz clock cycle (~31.25us) after the software program sets them. However, the polarities of EINTs are clocked with the system clock. Any changes to them take effect immediately. Note also that this External Interrupt Controller handles only level sensitive type of interrupt sources.

MTK Confidential Release for Konka

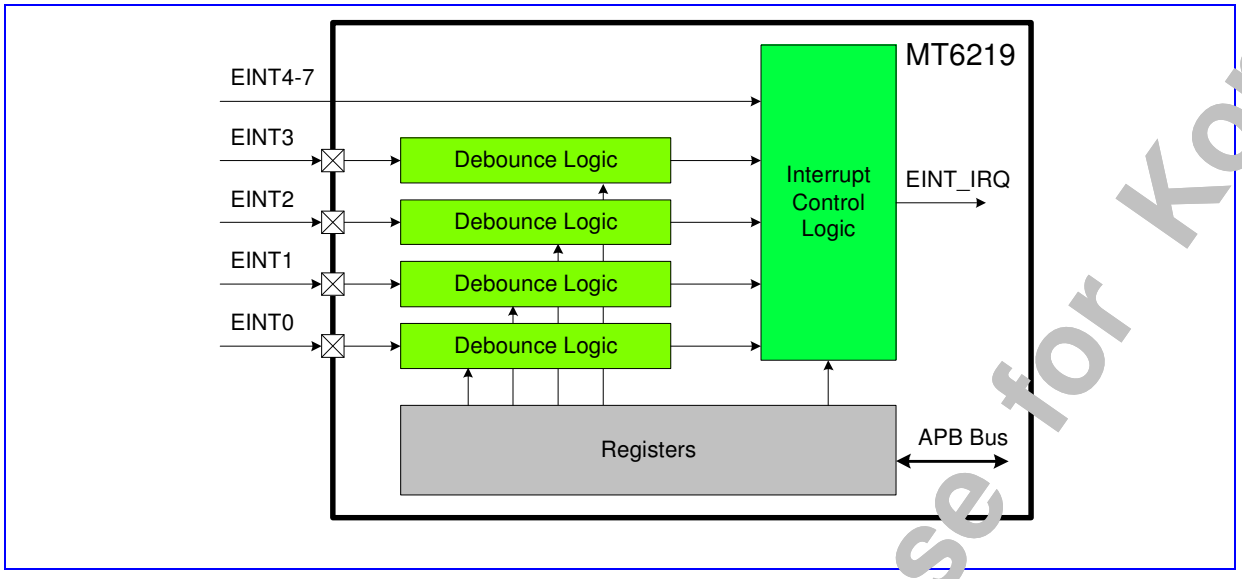

Figure 16 Block Diagram of External Interrupt Controller

REGISTER ADDRESS	REGISTER NAME	SYNONYM
CIRQ + 0000h	IRQ Selection 0 Register	IRQ_SEL0
CIRQ + 0004h	IRQ Selection 1 Register	IRQ_SEL1
CIRQ + 0008h	IRQ Selection 2 Register	IRQ_SEL2
CIRQ + 000Ch	IRQ Selection 3 Register	IRQ_SEL3
CIRQ + 0010h	IRQ Selection 4 Register	IRQ_SEL4
CIRQ + 0014h	IRQ Selection 5 Register	IRQ_SEL5
CIRQ + 0018h	IRQ Selection 6 Register	IRQ_SEL6
CIRQ + 001ch	IRQ Selection 7 Register	IRQ_SEL7
CIRQ + 0034h	FIQ Selection Register	FIQ_SEL
CIRQ + 0038h	IRQ Mask Register (LSB)	IRQ_MASKL
CIRQ + 003ch	IRQ Mask Register (MSB)	IRQ_MASKH
CIRQ + 0040h	IRQ Mask Clear Register (LSB)	IRQ_MASK_CLRL
CIRQ + 0044h	IRQ Mask Clear Register (MSB)	IRQ_MASK_CLRH
CIRQ + 0048h	IRQ Mask Set Register (LSB)	IRQ_MASK_SETL
CIRQ + 004ch	IRQ Mask Set Register (MSB)	IRQ_MASK_SETH
CIRQ + 0050h	IRQ Status Register (LSB)	IRQ_STAL
CIRQ + 0054h	IRQ Status Register (MSB)	IRQ_STAH
CIRQ + 0058h	IRQ End of Interrupt Register (LSB)	IRQ_EOIL
CIRQ + 005ch	IRQ End of Interrupt Register (MSB)	IRQ_EOIH
CIRQ + 0060h	IRQ Sensitive Register (LSB)	IRQ_SENSL
CIRQ + 0064h	IRQ Sensitive Register (MSB)	IRQ_SENSH
CIRQ + 0068h	IRQ Software Interrupt Register (LSB)	IRQ_SOFTL
CIRQ + 006ch	IRQ Software Interrupt Register (MSB)	IRQ_SOFTH
CIRQ + 0070h	FIQ Control Register	FIQ_CON
CIRQ + 0074h	FIQ End of Interrupt Register	FIQ_EOI

MTK Confidential Release for Konka

Reset	c	b	a

CIRQ+000ch IRQ Selection 3 Register IRQ_SEL3

Bit	31	30	29	28	27	26	25	24	23	22	21	20	19	18	17	16
Name			IRQ13						IRQ12						IRQ11	
Type			R/W						R/W						R/W	
Reset			13						12						11	
Bit	15	14	13	12	11	10	9	8	7	6	5	4	3	2	1	0
Name	IRQ11				IRQ10				IRQF							
Type	R/W				R/W				R/W							
Reset	11				10				f							

CIRQ+0010h IRQ Selection 4 Register IRQ_SEL4

Bit	31	30	29	28	27	26	25	24	23	22	21	20	19	18	17	16
Name			IRQ18						IRQ17						IRQ16	
Type			R/W						R/W						R/W	
Reset			18						17						16	
Bit	15	14	13	12	11	10	9	8	7	6	5	4	3	2	1	0
Name	IRQ16				IRQ15				IRQ14							
Type	R/W				R/W				R/W							
Reset	16				15				14							

CIRQ+0014h IRQ Selection 5 Register IRQ_SEL5

Bit	31	30	29	28	27	26	25	24	23	22	21	20	19	18	17	16
Name			IRQ1D						IRQ1C						IRQ1B	
Type			R/W						R/W						R/W	
Reset			1d						1c						1b	
Bit	15	14	13	12	11	10	9	8	7	6	5	4	3	2	1	0
Name	IRQ1B				IRQ1A				IRQ19							
Type	R/W				R/W				R/W							
Reset	1b				1a				19							

CIRQ+0018h IRQ Selection 6 Register IRQ_SEL6

Bit	31	30	29	28	27	26	25	24	23	22	21	20	19	18	17	16
Name			IRQ22						IRQ21						IRQ20	
Type			R/W						R/W						R/W	
Reset			22						21						20	
Bit	15	14	13	12	11	10	9	8	7	6	5	4	3	2	1	0
Name	IRQ20				IRQ1F				IRQ1E							
Type	R/W				R/W				R/W							
Reset	20				1f				1e							

CIRQ+001ch IRQ Selection 7 Register IRQ_SEL7

Bit	31	30	29	28	27	26	25	24	23	22	21	20	19	18	17	16
Name			IRQ27						IRQ26						IRQ25	
Type			R/W						R/W						R/W	
Reset			27						26						25	
Bit	15	14	13	12	11	10	9	8	7	6	5	4	3	2	1	0
Name	IRQ25				IRQ24				IRQ23							
Type	R/W				R/W				R/W							
Reset	25				24				23							

CIRQ+0020h IRQ Selection 8 Register IRQ_SEL8

Bit	31	30	29	28	27	26	25	24	23	22	21	20	19	18	17	16

MTK Confidential Release for Konka

Name																
Type																
Reset																
Bit	15	14	13	12	11	10	9	8	7	6	5	4	3	2	1	0
Name											IRQ28					
Type											R/W					
Reset											28					

CIRQ+0034h FIQ Selection Register FIQ_SEL

Bit	31	30	29	28	27	26	25	24	23	22	21	20	19	18	17	16
Name																
Type																
Reset																
Bit	15	14	13	12	11	10	9	8	7	6	5	4	3	2	1	0
Name											FIQ					
Type											R/W					
Reset											0					

The IRQ/FIQ Selection Registers provide system designers with a flexible routing scheme to make various mappings of priority among interrupt sources possible. The registers allow the interrupt sources to be mapped onto interrupt requests of either FIQ or IRQ. While only one interrupt source can be assigned to FIQ, the other ones share IRQs by mapping them onto IRQ0 to IRQ1F connected to IRQ controller. The priority sequence of IRQ0~IRQ1F is fixed, i.e. IRQ0 > IRQ1 > IRQ2 > … > IRQ1E > IRQ1F. During the software configuration process, the Interrupt Source Code of desired interrupt source should be written into source field of the corresponding IRQ_SEL0-IRQ_SEL4/FIQ_SEL. Five-bit Interrupt Source Codes for all interrupt sources are fixed and defined.

Interrupt Source	STA2 (Hex)	STAH_STAL
GPI_FIQ	0	000_00000001
TDMA_CTIRQ1	1	000_00000002
TDMA_CTIRQ2	2	000_00000004
DSP2CPU	3	000_00000008
SIM	4	000_00000010
DMA	5	000_00000020
TDMA	6	000_00000040
UART1	7	000_00000080
KeyPad	8	000_00000100
UART2	9	000_00000200
GPTimer	a	000_00000400
EINT	b	000_00000800
USB	c	000_00001000
MSDC	d	000_00002000
RTC	e	000_00004000
IrDA	f	000_00008000
LCD	10	000_00010000
UART3	11	000_00020000
GPI	12	000_00040000
WDT	13	000_00080000
SWDBG	14	000_00100000
CHE	15	000_00200000

MTK Confidential Release for Konka

NFI	16	000_00400000
B2PSI	17	000_00800000
Image DMA	18	000_01000000
GIF	19	000_02000000
PNG	1a	000_04000000
SCCB	1b	000_08000000
G2D	1c	000_10000000
Image Porc	1d	000_20000000
CAM	1e	000_40000000
PFC	1f	000_80000000
MPEG4_DEC	20	001_00000000
MPEG4_ENC	21	002_00000000
JPEG_DEC	22	004_00000000
JPEG_ENC	23	008_00000000
Resizer_crz	24	010_00000000
Resizer_drz	25	020_00000000
Resizer_prz	26	040_00000000
TVE	27	080_00000000

Table 12 Interrupt Source Code for Interrupt Sources

FIQ, IRQ0-26 The 5-bit content of this field corresponds to an Interrupt Source Code shown above.

CIRQ+0038h IRQ Mask Register (LSB) IRQ_MASKL

Bit	31	30	29	28	27	26	25	24	23	22	21	20	19	18	17	16
Name	IRQ1F	IRQ1E	IRQ1D	IRQ1C	IRQ1B	IRQ1A	IRQ19	IRQ18	IRQ17	IRQ16	IRQ15	IRQ14	IRQ13	IRQ12	IRQ11	IRQ10
Type	R/W	R/W	R/W	R/W	R/W	R/W	R/W	R/W	R/W	R/W	R/W	R/W	R/W	R/W	R/W	R/W
Reset	1	1	1	1	1	1	1	1	1	1	1	1	1	1	1	1
Bit	15	14	13	12	11	10	9	8	7	6	5	4	3	2	1	0
Name	IRQF	IRQE	IRQD	IRQC	IRQB	IRQA	IRQ9	IRQ8	IRQ7	IRQ6	IRQ5	IRQ4	IRQ3	IRQ2	IRQ1	IRQ0
Type	R/W	R/W	R/W	R/W	R/W	R/W	R/W	R/W	R/W	R/W	R/W	R/W	R/W	R/W	R/W	R/W
Reset	1	1	1	1	1	1	1	1	1	1	1	1	1	1	1	1

CIRQ+003ch IRQ Mask Register (MSB) IRQ_MASKH

Bit	31	30	29	28	27	26	25	24	23	22	21	20	19	18	17	16
Name																
Type																
Reset																
Bit	15	14	13	12	11	10	9	8	7	6	5	4	3	2	1	0
Name									IRQ27	IRQ26	IRQ25	IRQ24	IRQ23	IRQ22	IRQ21	IRQ20
Type									R/W	R/W	R/W	R/W	R/W	R/W	R/W	R/W
Reset									1	1	1	1	1	1	1	1

This register contains a mask bit for each interrupt line in IRQ Controller. The register allows each interrupt source IRQ0 to IRQ1F to be disabled or masked separately under software control. After a system reset, all bit values are set to 1 to indicate that interrupt requests are prohibited.

IRQ0-27 Mask control for the associated interrupt source in the IRQ controller

0 Interrupt is enabled.

1 Interrupt is disabled.

MTK Confidential Release for Konka

CIRQ+0040h IRQ Mask Clear Register (LSB)

IRQ_MASK_CLRL

Bit	31	30	29	28	27	26	25	24	23	22	21	20	19	18	17	16
Name	IRQ1F	IRQ1E	IRQ1D	IRQ1C	IRQ1B	IRQ1A	IRQ19	IRQ18	IRQ17	IRQ16	IRQ15	IRQ14	IRQ13	IRQ12	IRQ11	IRQ10
Type	W1C	W1C	W1C	W1C	W1C	W1C	W1C	W1C	W1C	W1C	W1C	W1C	W1C	W1C	W1C	W1C
Bit	15	14	13	12	11	10	9	8	7	6	5	4	3	2	1	0
Name	IRQF	IRQE	IRQD	IRQC	IRQB	IRQA	IRQ9	IRQ8	IRQ7	IRQ6	IRQ5	IRQ4	IRQ3	IRQ2	IRQ1	IRQ0
Type	W1C	W1C	W1C	W1C	W1C	W1C	W1C	W1C	W1C	W1C	W1C	W1C	W1C	W1C	W1C	W1C

CIRQ+0044h IRQ Mask Clear Register (MSB)

IRQ_MASK_CLRH

Bit	31	30	29	28	27	26	25	24	23	22	21	20	19	18	17	16
Name																
Type																
Bit	15	14	13	12	11	10	9	8	7	6	5	4	3	2	1	0
Name									IRQ27	IRQ26	IRQ25	IRQ24	IRQ23	IRQ22	IRQ21	IRQ20
Type									W1C	W1C	W1C	W1C	W1C	W1C	W1C	W1C

This register is used to clear bits in IRQ Mask Register. When writing to this register, the data bits that are HIGH cause the corresponding bits in IRQ Mask Register to be cleared. Data bits that are LOW have no effect on the corresponding bits in IRQ Mask Register.

IRQ0-27 Clear corresponding bits in IRQ Mask Register.

- **0** No effect.
- **1** Disable the corresponding MASK bit.

CIRQ+0048h IRQ Mask SET Register (LSB)

IRQ_MASK_SETL

Bit	31	30	29	28	27	26	25	24	23	22	21	20	19	18	17	16
Name	IRQ1F	IRQ1E	IRQ1D	IRQ1C	IRQ1B	IRQ1A	IRQ19	IRQ18	IRQ17	IRQ16	IRQ15	IRQ14	IRQ13	IRQ12	IRQ11	IRQ10
Type	W1S	W1S	W1S	W1S	W1S	W1S	W1S	W1S	W1S	W1S	W1S	W1S	W1S	W1S	W1S	W1S
Bit	15	14	13	12	11	10	9	8	7	6	5	4	3	2	1	0
Name	IRQF	IRQE	IRQD	IRQC	IRQB	IRQA	IRQ9	IRQ8	IRQ7	IRQ6	IRQ5	IRQ4	IRQ3	IRQ2	IRQ1	IRQ0
Type	W1S	W1S	W1S	W1S	W1S	W1S	W1S	W1S	W1S	W1S	W1S	W1S	W1S	W1S	W1S	W1S

CIRQ+004ch IRQ Mask SET Register (MSB)

IRQ_MASK_SETH

Bit	31	30	29	28	27	26	25	24	23	22	21	20	19	18	17	16
Name																
Type																
Bit	15	14	13	12	11	10	9	8	7	6	5	4	3	2	1	0
Name									IRQ27	IRQ26	IRQ25	IRQ24	IRQ23	IRQ22	IRQ21	IRQ20
Type									W1S	W1S	W1S	W1S	W1S	W1S	W1S	W1S

This register is used to set bits in the IRQ Mask Register. When writing to this register, the data bits that are HIGH cause the corresponding bits in IRQ Mask Register to be set. Data bits that are LOW have no effect on the corresponding bits in IRQ Mask Register.

IRQ0-27 Set corresponding bits in IRQ Mask Register.

- **0** No effect.
- **1** Enable corresponding MASK bit.

MTK Confidential Release for Konka

CIRQ+0050h IRQ Source Status Register (LSB) IRQ_STAL

Bit	31	30	29	28	27	26	25	24	23	22	21	20	19	18	17	16
Name	IRQ1F	IRQ1E	IRQ1D	IRQ1C	IRQ1B	IRQ1A	IRQ19	IRQ18	IRQ17	IRQ16	IRQ15	IRQ14	IRQ13	IRQ12	IRQ11	IRQ10
Type	RO	RO	RO	RO	RO	RO	RO	RO	RO	RO	RO	RO	RO	RO	RO	RO
Reset	0	0	0	0	0	0	0	0	0	0	0	0	0	0	0	0
Bit	15	14	13	12	11	10	9	8	7	6	5	4	3	2	1	0
Name	IRQF	IRQE	IRQD	IRQC	IRQB	IRQA	IRQ9	IRQ8	IRQ7	IRQ6	IRQ5	IRQ4	IRQ3	IRQ2	IRQ1	IRQ0
Type	RO	RO	RO	RO	RO	RO	RO	RO	RO	RO	RO	RO	RO	RO	RO	RO
Reset	0	0	0	0	0	0	0	0	0	0	0	0	0	0	0	0

CIRQ+0054h IRQ SouROe Status Register (MSB) IRQ_STAH

Bit	31	30	29	28	27	26	25	24	23	22	21	20	19	18	17	16
Name																
Type																
Reset																
Bit	15	14	13	12	11	10	9	8	7	6	5	4	3	2	1	0
Name									IRQ27	IRQ26	IRQ25	IRQ24	IRQ23	IRQ22	IRQ21	IRQ20
Type									RO	RO	RO	RO	RO	RO	RO	RO
Reset									0	0	0	0	0	0	0	0

This Register allows software to poll which interrupt line has generated an IRQ interrupt request. A bit set to 1 indicates a corresponding active interrupt line. Only one flag is active at a time. The IRQ_STA is type of read-clear; write access has no effect on the content.

IRQ0-27 Interrupt indicator for the associated interrupt source.

- **0** The associated interrupt source is non-active.
- **1** The associated interrupt source is asserted.

CIRQ+0058h IRQ End of Interrupt Register (LSB) IRQ_EOIL

Bit	31	30	29	28	27	26	25	24	23	22	21	20	19	18	17	16
Name	IRQ1F	IRQ1E	IRQ1D	IRQ1C	IRQ1B	IRQ1A	IRQ19	IRQ18	IRQ17	IRQ16	IRQ15	IRQ14	IRQ13	IRQ12	IRQ11	IRQ10
Type	WO	WO	WO	WO	WO	WO	WO	WO	WO	WO	WO	WO	WO	WO	WO	WO
Reset	0	0	0	0	0	0	0	0	0	0	0	0	0	0	0	0
Bit	15	14	13	12	11	10	9	8	7	6	5	4	3	2	1	0
Name	IRQF	IRQE	IRQD	IRQC	IRQB	IRQA	IRQ9	IRQ8	IRQ7	IRQ6	IRQ5	IRQ4	IRQ3	IRQ2	IRQ1	IRQ0
Type	WO	WO	WO	WO	WO	WO	WO	WO	WO	WO	WO	WO	WO	WO	WO	WO
Reset	0	0	0	0	0	0	0	0	0	0	0	0	0	0	0	0

CIRQ+005ch IRQ End of Interrupt Register (MSB) IRQ_EOIH

Bit	31	30	29	28	27	26	25	24	23	22	21	20	19	18	17	16
Name																
Type																
Reset																
Bit	15	14	13	12	11	10	9	8	7	6	5	4	3	2	1	0
Name									IRQ27	IRQ26	IRQ25	IRQ24	IRQ23	IRQ22	IRQ21	IRQ20
Type									WO	WO	WO	WO	WO	WO	WO	WO
Reset									0	0	0	0	0	0	0	0

This register provides a mean for software to relinquish and to refresh the interrupt controller. Writing a 1 to a specific bit position results in an End of Interrupt command issued internally to the corresponding interrupt line.

IRQ0-27 End of Interrupt command for the associated interrupt line.

- **0** No service is currently in progress or pending.
- **1** Interrupt request is in-service.

MTK Confidential Release for Konka

CIRQ+0060h IRQ Sensitive Register (LSB) IRQ_SENSL

Bit	31	30	29	28	27	26	25	24	23	22	21	20	19	18	17	16
Name	IRQ1F	IRQ1E	IRQ1D	IRQ1C	IRQ1B	IRQ1A	IRQ19	IRQ18	IRQ17	IRQ16	IRQ15	IRQ14	IRQ13	IRQ12	IRQ11	IRQ10
Type	R/W	R/W	R/W	R/W	R/W	R/W	R/W	R/W	R/W	R/W	R/W	R/W	R/W	R/W	R/W	R/W
Reset	0	0	0	0	0	0	0	0	0	0	0	0	0	0	0	0
Bit	15	14	13	12	11	10	9	8	7	6	5	4	3	2	1	0
Name	IRQF	IRQE	IRQD	IRQC	IRQB	IRQA	IRQ9	IRQ8	IRQ7	IRQ6	IRQ5	IRQ4	IRQ3	IRQ2	IRQ1	IRQ0
Type	R/W	R/W	R/W	R/W	R/W	R/W	R/W	R/W	R/W	R/W	R/W	R/W	R/W	R/W	R/W	R/W
Reset	0	0	0	0	0	0	0	0	0	0	0	0	0	0	0	0

CIRQ+0064h IRQ Sensitive Register (MSB) IRQ_SENSH

Bit	31	30	29	28	27	26	25	24	23	22	21	20	19	18	17	16
Name																
Type																
Reset																
Bit	15	14	13	12	11	10	9	8	7	6	5	4	3	2	1	0
Name									IRQ27	IRQ26	IRQ25	IRQ24	IRQ23	IRQ22	IRQ21	IRQ20
Type									R/W	R/W	R/W	R/W	R/W	R/W	R/W	R/W
Reset									0	0	0	0	0	0	0	0

All interrupt lines of IRQ Controller, IRQ0~IRQ1F can be programmed as either edge or level sensitive. By default, all the interrupt lines are edge sensitive and should be active LOW. Once a interrupt line is programmed as edge sensitive, an interrupt request is triggered only at the falling edge of interrupt line, and the next interrupt is not accepted until the EOI command is given. However, level sensitive interrupts trigger is according to the signal level of the interrupt line. Once the interrupt line become from HIGH to LOW, an interrupt request is triggered, and another interrupt request is triggered if the signal level remain LOW after an EOI command. Note that in edge sensitive mode, even if the signal level remains LOW after EOI command, another interrupt request is not triggered. That is because edge sensitive interrupt is only triggered at the falling edge.

IRQ0-27 Sensitivity type of the associated Interrupt Source

- **0** Edge sensitivity with active LOW
- **1** Level sensitivity with active LOW

CIRQ+0068h IRQ Software Interrupt Register (LSB) IRQ_SOFTL

Bit	31	30	29	28	27	26	25	24	23	22	21	20	19	18	17	16
Name	IRQ1F	IRQ1E	IRQ1D	IRQ1C	IRQ1B	IRQ1A	IRQ19	IRQ18	IRQ17	IRQ16	IRQ15	IRQ14	IRQ13	IRQ12	IRQ11	IRQ10
Type	R/W	R/W	R/W	R/W	R/W	R/W	R/W	R/W	R/W	R/W	R/W	R/W	R/W	R/W	R/W	R/W
Reset	0	0	0	0	0	0	0	0	0	0	0	0	0	0	0	0
Bit	15	14	13	12	11	10	9	8	7	6	5	4	3	2	1	0
Name	IRQF	IRQE	IRQD	IRQC	IRQB	IRQA	IRQ9	IRQ8	IRQ7	IRQ6	IRQ5	IRQ4	IRQ3	IRQ2	IRQ1	IRQ0
Type	R/W	R/W	R/W	R/W	R/W	R/W	R/W	R/W	R/W	R/W	R/W	R/W	R/W	R/W	R/W	R/W
Reset	0	0	0	0	0	0	0	0	0	0	0	0	0	0	0	0

CIRQ+006ch IRQ Software Interrupt Register (MSB) IRQ_SOFTH

Bit	31	30	29	28	27	26	25	24	23	22	21	20	19	18	17	16
Name																
Type																
Reset																
Bit	15	14	13	12	11	10	9	8	7	6	5	4	3	2	1	0
Name									IRQ27	IRQ26	IRQ25	IRQ24	IRQ23	IRQ22	IRQ21	IRQ20
Type									R/W	R/W	R/W	R/W	R/W	R/W	R/W	R/W
Reset									0	0	0	0	0	0	0	0

MTK Confidential Release for Konka

Setting "1" to the specific bit position generates a software interrupt for corresponding interrupt line before mask. This register is used for debug purpose.

IRQ0-IRQ27 Software Interrupt

CIRQ+0070h FIQ Control Register FIQ_CON

Bit	31	30	29	28	27	26	25	24	23	22	21	20	19	18	17	16
Name																
Type																
Reset																
Bit	15	14	13	12	11	10	9	8	7	6	5	4	3	2	1	0
Name															SENS	MASK
Type															R/W	R/W
Reset															0	1

This register provides a means for software program to control the FIQ controller.

MASK Mask control for the FIQ Interrupt Source

- **0** Interrupt is enabled.
- **1** Interrupt is disabled.

SENS Sensitivity type of the FIQ Interrupt Source

- **0** Edge sensitivity with active LOW
- **1** Level sensitivity with active LOW

CIRQ+0074h FIQ End of Interrupt Register FIQ_EOI

Bit	31	30	29	28	27	26	25	24	23	22	21	20	19	18	17	16
Name																
Type																
Reset																
Bit	15	14	13	12	11	10	9	8	7	6	5	4	3	2	1	0
Name																EOI
Type																WO
Reset																0

This register provides a means for software to relinquish and to refresh the FIQ controller. Writing a '1' to the specific bit position results in an End of Interrupt command issued internally to the corresponding interrupt line.

EOI End of Interrupt command

CIRQ+0078h Binary Coded Value of IRQ_STATUS IRQ_STA2

Bit	31	30	29	28	27	26	25	24	23	22	21	20	19	18	17	16
Name																
Type																
Reset																
Bit	15	14	13	12	11	10	9	8	7	6	5	4	3	2	1	0
Name								NOIRQ			STS					
Type								RO			RO					
Reset								0			0					

This Register is a binary coded version of IRQ_STA. It is used by the software program to poll which interrupt line has generated the IRQ interrupt request in a much easier way. Any read to it has the same result as reading IRQ_STA. The IRQ_STA2 is also read-only; write access has no effect on the content. Note that IRQ_STA2 should be coupled with IRQ_EOI2 while using it.

STS Binary coded value of IRQ_STA

MTK Confidential Release for Konka

NOIRQ Indicating if there is an IRQ or not. If there is no IRQ, this bit is HIGH, and the value of STS is 00_0000b.

CIRQ+007ch Binary Coded Value of IRQ_EOI IRQ_EOI2

Bit	31	30	29	28	27	26	25	24	23	22	21	20	19	18	17	16
Name																
Type																
Reset																
Bit	15	14	13	12	11	10	9	8	7	6	5	4	3	2	1	0
Name											EOI					
Type											WO					
Reset											0					

This register is a binary coded version of IRQ_EOI. It provides an easier way for software program to relinquish and to refresh the interrupt controller. Writing a specific code results in an End of Interrupt command issued internally to the corresponding interrupt line. Note that IRQ_EOI2 should be coupled with IRQ_STA2 while using it.

EOI Binary coded value of IRQ_EOI

CIRQ+0080h Binary Coded Value of IRQ_SOFT IRQ_SOFT2

Bit	31	30	29	28	27	26	25	24	23	22	21	20	19	18	17	16
Name																
Type																
Reset																
Bit	15	14	13	12	11	10	9	8	7	6	5	4	3	2	1	0
Name													SOFT			
Type													WO			
Reset													0			

This register is a binary coded version of IRQ_SOFT.

SOFT Binary Coded Value of IRQ_SOFT

CIRQ+0100h EINT Interrupt Status Register EINT_STA

Bit	31	30	29	28	27	26	25	24	23	22	21	20	19	18	17	16
Name																
Type																
Reset																
Bit	15	14	13	12	11	10	9	8	7	6	5	4	3	2	1	0
Name									EINT7	EINT6	EINT5	EINT4	EINT3	EINT2	EINT1	EINT0
Type									RO	RO	RO	RO	RO	RO	RO	RO
Reset									0	0	0	0	0	0	0	0

This register keeps up with current status that which EINT Source generates the interrupt request. If EINT sources are set to edge sensitivity, EINT_IRQ is de-asserted while this register is read.

EINT0-EINT7 Interrupt status

- **0** No interrupt request is generated.
- **1** Interrupt request is pending.

CIRQ+0104h EINT Interrupt Mask Register EINT_MASK

Bit	31	30	29	28	27	26	25	24	23	22	21	20	19	18	17	16
Name																
Type																
Reset																
Bit	15	14	13	12	11	10	9	8	7	6	5	4	3	2	1	0
Name									EINT7	EINT6	EINT5	EINT4	EINT3	EINT2	EINT1	EINT0
Type									R/W	R/W	R/W	R/W	R/W	R/W	R/W	R/W
Reset									1	1	1	1	1	1	1	1

MTK Confidential Release for Konka

This register controls whether or not EINT Source is allowed to generate an interrupt request. Setting a "1" to the specific bit position prohibits the external interrupt line from becoming active.

EINT0-EINT7 Interrupt Mask

- **0** Interrupt request is enabled.
- **1** Interrupt request is disabled.

CIRQ+0108h EINT Interrupt Mask Clear Register — EINT_MASK_CLR

Bit	31	30	29	28	27	26	25	24	23	22	21	20	19	18	17	16
Name																
Type																
Bit	15	14	13	12	11	10	9	8	7	6	5	4	3	2	1	0
Name									EINT7	EINT6	EINT5	EINT4	EINT3	EINT2	EINT1	EINT0
Type									W1C	W1C	W1C	W1C	W1C	W1C	W1C	W1C

This register is used to clear individual mask bits. Only the bits set to 1 are in effect, and interrupt masks for which the mask bit is set are cleared (set to 0). Otherwise the interrupt mask bit retains its original value.

EINT0-EINT7 Disable mask for the associated external interrupt source.

- **0** No effect.
- **1** Disable the corresponding MASK bit.

CIRQ+010Ch EINT Interrupt Mask Set Register — EINT_MASK_SET

Bit	31	30	29	28	27	26	25	24	23	22	21	20	19	18	17	16
Name																
Type																
Bit	15	14	13	12	11	10	9	8	7	6	5	4	3	2	1	0
Name									EINT7	EINT6	EINT5	EINT4	EINT3	EINT2	EINT1	EINT0
Type									W1S	W1S	W1S	W1S	W1S	W1S	W1S	W1S

This register is used to set individual mask bits. Only the bits set to 1 are in effect, and interrupt masks for which the mask bit is set are set to 1. Otherwise the interrupt mask bit retains its original value.

EINT0-EINT7 Disable mask for the associated external interrupt source.

- **0** No effect.
- **1** Enable corresponding MASK bit.

CIRQ+0110h EINT Interrupt Acknowledge Register — EINT_INTACK

Bit	31	30	29	28	27	26	25	24	23	22	21	20	19	18	17	16
Name																
Type																
Reset																
Bit	15	14	13	12	11	10	9	8	7	6	5	4	3	2	1	0
Name									EINT7	EINT6	EINT5	EINT4	EINT3	EINT2	EINT1	EINT0
Type									WO	WO	WO	WO	WO	WO	WO	WO
Reset									0	0	0	0	0	0	0	0

Writing "1" to the specific bit position acknowledge the interrupt request correspondingly to the external interrupt line source.

EINT0-EINT7 Interrupt acknowledgement

- **0** No effect
- **1** Interrupt request is acknowledged.

MTK Confidential Release for Konka

CIRQ+0114h EINT Sensitive Register EINT_SENS

Bit	31	30	29	28	27	26	25	24	23	22	21	20	19	18	17	16
Name																
Type																
Reset																
Bit	15	14	13	12	11	10	9	8	7	6	5	4	3	2	1	0
Name													EINT3	EINT2	EINT1	EINT0
Type													R/W	R/W	R/W	R/W
Reset													1	1	1	1

Sensitivity type of external interrupt source. Only EINT0~3 need to be specified. EINT4~7 are always edge sensitive.

EINT0-3 Sensitivity type of the associated external interrupt source.

- **0** Edge sensitivity
- **1** Level sensitivity

CIRQ+01m0h EINTn De-bounce Control Register EINTn_CON

Bit	31	30	29	28	27	26	25	24	23	22	21	20	19	18	17	16
Name																
Type																
Reset																
Bit	15	14	13	12	11	10	9	8	7	6	5	4	3	2	1	0
Name	EN				POL	CNT										
Type	R/W				R/W	R/W										
Reset	0				0	0										

These registers control the de-bounce logic for external interrupt sources in order to minimize the possibility of false activations. EINT4~7 have no de-bounce mechanism, therefore only bit POL is used.

Note that n is from 0 to 7, and m is n + 2.

CNT De-bounce duration in terms of number of 32 KHz clock cycles.

POL Activation type of the EINT source

- **0** Negative polarity
- **1** Positive polarity

EN De-bounce control circuit

- **0** Disable
- **1** Enable

3.6 Code Cache Controller

3.6.1 General Description

A new subsystem consisting of cache and TCM (tightly coupled memory) is implemented in MT6228. This subsystem is placed between MCU core and AHB bus interface, as shown in **Figure 17**.

MTK Confidential Release for Konka

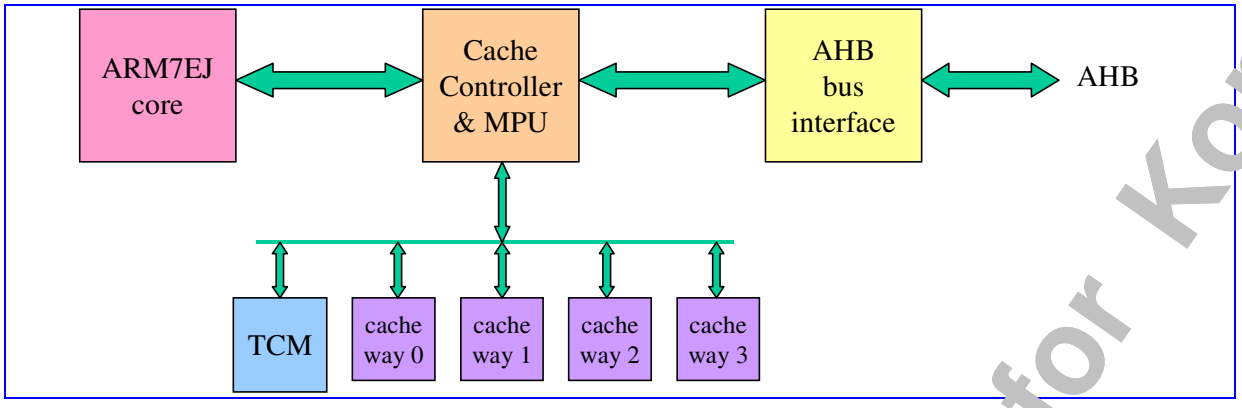

Figure 17 Cache and TCM subsystem

TCM is a high-speed (zero wait state) dedicated memory accessed by MCU exclusively. Because MCU can run at 104 MHz and on-chip bus runs at maximum of 52 MHz, latency occurs when MCU accesses memory or peripherals through the on-chip bus. By moving timing critical code and data into TCM, MCU performance is increased and the response to particular events can be guaranteed.

Another method to increase MCU performance is the introduction of cache. Cache is a small memory, keeping the copy of external memory. If MCU reads a portion of cacheable data, the data is copied to cache. If MCU needs the same data at a later time, it can retrieve the data directly from cache (called cache hit) instead of from external memory, which takes a long time compared to accessing high-speed (zero wait state) cache memory.

Since a large external memory maps to a small cache, cache can hold only a small portion of external memory. If MCU accesses data not found in cache (called cache miss), some contents of cache must be dropped (flushed) and the required data is transferred from external memory (called cache line fill) and stored in cache. On the other hand, TCM is not a copy of external memory. The best way to use TCM is to put critical code/data in TCM in the memory usage plan. After power on reset, the boot loader copies TCM contents from external storage (such as flash) to internal TCM. If necessary, MCU can replace a portion of TCM content with other data on external storage in the runtime to implement an "overlay" mechanism. TCM is also an ideal place to put stack data.

The sizes of TCM and cache can be set to one of 4 configurations:

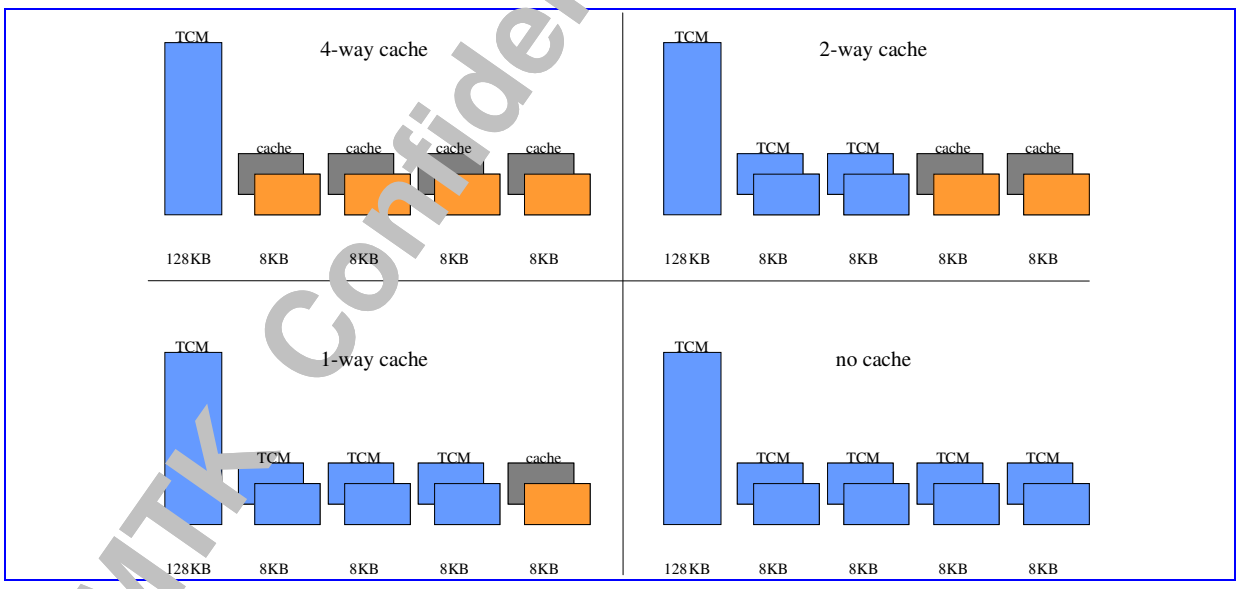

Figure 18 Configurations of TCM and cache

MTK Confidential Release for Konka

- 128KB TCM, 32KB cache
- 144KB TCM, 16KB cache
- 152KB TCM, 8KB cache
- 160KB TCM, 0KB cache

These configurations provide flexibility for software to adjust for optimum system performance.

The address mapping of these memories is as follows:

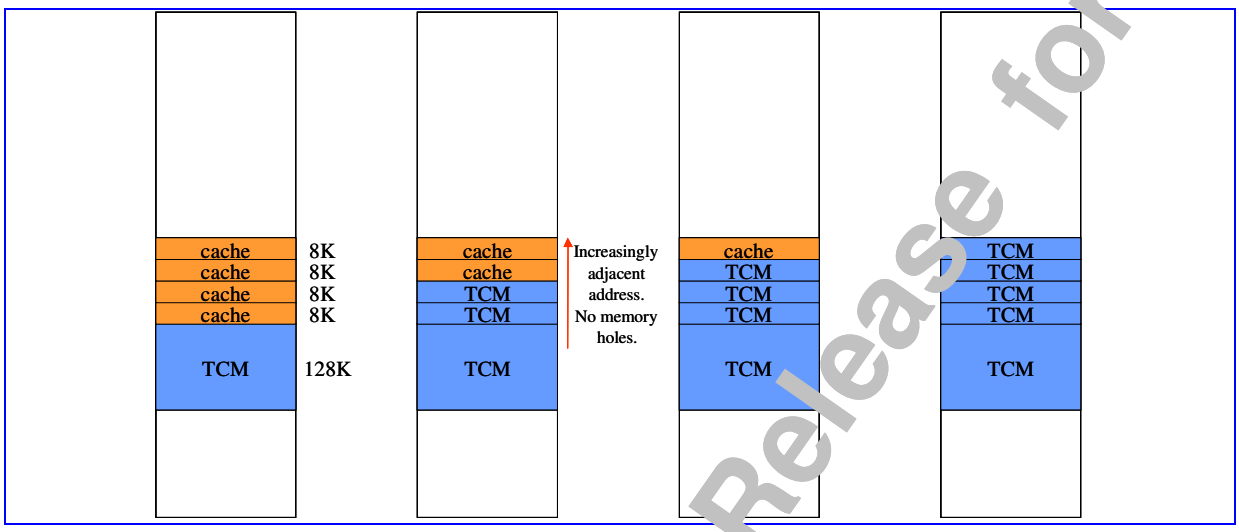

Figure 19 Memory mapping of TCM and cache

In **Figure 19,** MCU could only access TCM explicitly. Cache is transparent to MCU.

3.6.2 Organization of Cache

The cache system has the following features:

- Write through (no write allocation)
- Configurable 1/2/4 way set associative (8K/16K/32K)
- Each way has 256 cache lines with 8 word line size (256*8*4=8KB)
- 19 bit tag address, 1 valid bit, for one cache line.

One way of cache comprises of two memories: tag memory and data memory. Tag memory stores each line's valid bit, dirty bit and tag (upper part of address). Data memory stores line data. When MCU accesses memory, the address is compared to the contents of tag memory. First the line index (address bit [12:5]) is used to locate a line, and then the tag of the line is compared to upper part of address (bit [31:13]). If two parts match and valid bit is 1, it is a cache hit and data from that particular way is sent back to MCU. This process is illustrated in the following figure:

MTK Confidential Release for Konka

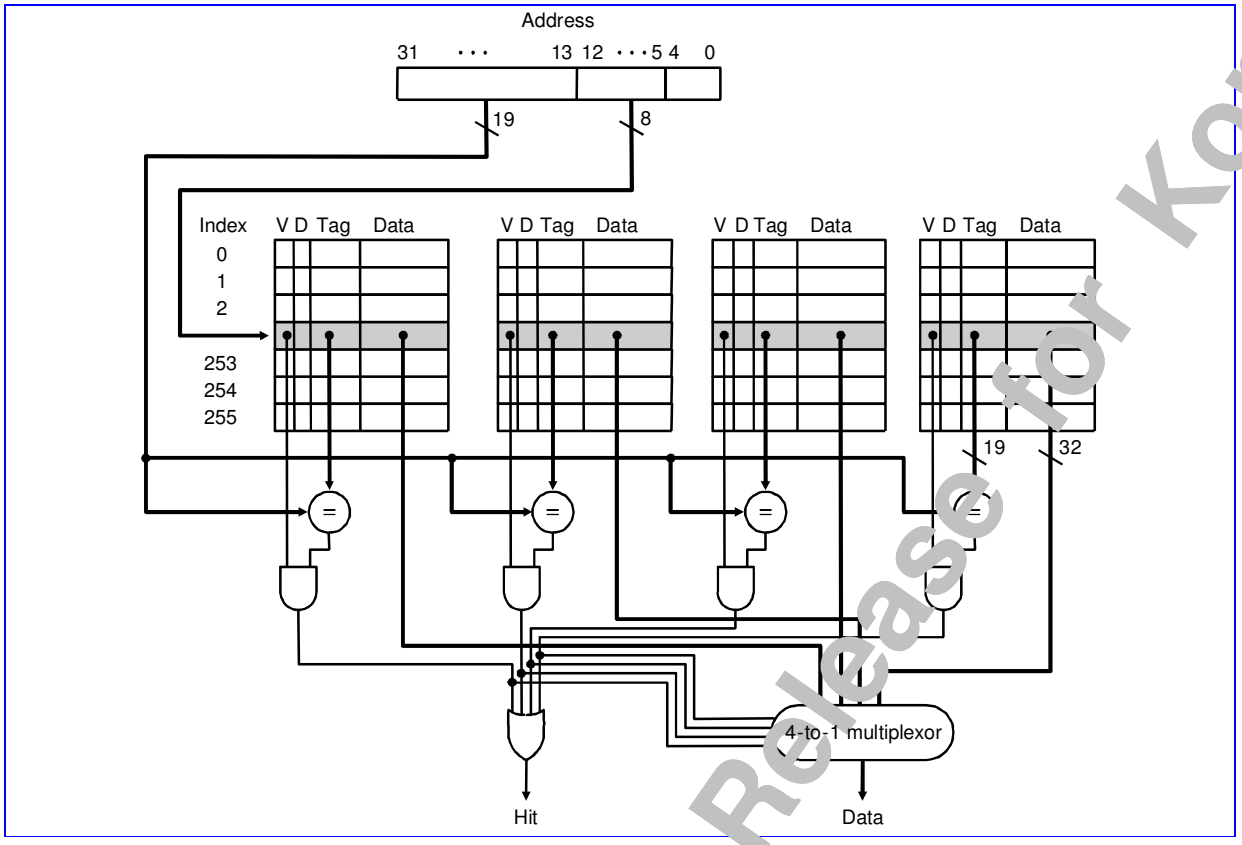

Figure 20 Tag comparison of 4-way cache

If most memory accesses are cache hit, MCU could get data immediately without wait states and the overall system performance is higher. There are several factors that may affect cache hit rate:

- Cache size and the organization

  The larger the cache size is, the higher the hit rate is. However the hit rate starts to saturate when cache size is larger than a threshold size. Normally a cache size of 16KB and above and two or four ways achieve a good hit rate.

- Program behavior

  If the system has several tasks that switch data quickly, it may cause cache contents to be flushed frequently. Each time a new task is run, the cache holds the data. If the next task uses data in memory that occupies the same cache entries as the previous task, the cache contents are flushed to store the data for the new task. Interrupts also cause program flow to change dynamically. The interrupt handler code itself and the data it processes may cause cache to flush some data used by the current task. Thus after exiting the interrupt handler and returning to the current task, the flushed data may need to be re-cached, resulting performance degradation.

To help a software engineer tune system performance, the cache controller in MT6228 records the number of cache hits and cacheable memory accesses. The cache hit rate can be obtained from these two numbers.

The cache sub system also has a module called MPU (memory protection unit). MPU can prevent illegal memory access and specify which memory region is cacheable or non-cacheable. Two fields in CACHE_CON register control the enable of MPU functions. MPU has its own registers to define memory region and associated regions. These

MTK Confidential Release for Konka

settings only take effect after the enable bits in CACHE_CON are set to 1. For more details on the settings, refer to MPU portion of the specification.

3.6.3 Cache Operations

Upon power on, cache memory contains random numbers and cannot be used by MCU. Therefore MCU must have some means to "clean" cache memory before enabling it. The cache controller provides a register which, when written, can perform operations on cache memory. These are called cache operations, and include

- Invalidate one cache line

  The user must give a memory address. If it is found within cache, that particular line is invalidated (valid bit set to 0). Alternatively, the user can specify which set/way of cache to be invalidated.

- Invalidate all cache lines

  The user needs not to specify an address. The cache controller hardware automatically clears all valid bits in each tag memory.

3.6.4 Cache Controller Register Definition

CACHE base address is assumed 0x80700000 (subject to change).

CACHE+00h Cache General Control Register CACHE_CON

Bit	15	14	13	12	11	10	9	8	7	6	5	4	3	2	1	0
Name							CACHESIZE						CNTEN1	CNTEN0	MPEN	MCEN
Type							RW						RW	RW	R/W	R/W
Reset							00						0	0	0	0

This register determines the cache size, cache hit counter and the enabling of MPU.

CACHESIZE Cache Size Select

- **00** no cache (128KB TCM)
- **01** 8KB, 1-way cache (120KB TCM)
- **10** 16KB, 2-way cache (112KB TCM)
- **11** 32KB, 4-way cache (96KB TCM)

CNTEN1 Enable cache hit counter 1.

If enabled, cache controller increments a 48-bit counter each time a cache hit occurs. This number can provide a reference for performance measurement for tuning of application programs. This counter increments only when the cacheable information is from MPU cacheable regions 4~7.

- **0** Disable
- **1** Enable

CNTEN0 Enable cache hit counter 0

If enabled, cache controller increments a 48-bit counter each time a cache hit occurs. This number can provide a reference for performance measurement for tuning of application programs. This counter increments only when the cacheable information is from MPU cacheable regions 0~3.

- **0** Disable
- **1** Enable

MPEN Enable MPU comparison of read/write permission setting.

If disabled, MCU can access any memory segment without any restriction. If enabled, MPU compares the address of MCU to its setting. If an address falls into a restricted region, MPU stops this memory access and sends an "ABORT" signal to MCU. Refer to the MPU portion of the specification for more details.

MTK Confidential Release for Konka

0 Disable

1 Enable

MCEN Enable MPU comparison of cacheable/non-cacheable setting.

If disabled, MCU memory accesses are all non-cacheable, i.e., they go through AHB bus (except for TCM). If enabled, the setting in MPU takes effect. If MCU accesses a cacheable memory region, the cache controller returns the data in cache if found in cache, and retrieves the data through the AHB bus only if a cache miss occurs. Refer to the MPU portion of the specification for more details.

0 Disable

1 Enable

CACHE+04h Cache Operation CACHE_OP

Bit	31	30	29	28	27	26	25	24	23	22	21	20	19	18	17	16
Name	TADDR[31:16]															
Type	R/W															
Reset	0															
Bit	15	14	13	12	11	10	9	8	7	6	5	4	3	2	1	0
Name	TADDR[15:5]											OP[3:0]				EN
Type	R/W											W				W1
Reset	0											0				0

This register defines the address and/or which kind of cache operations to perform. When MCU writes this register, the pipeline of MCU is stopped for the cache controller to complete the operation. Bit 0 of the register must be written 1 to enable the command.

TADDR[31:5] Target Address

This field contains the address of invalidation operation. If OP[3:0]=0010, TADDR[31:5] is the address[31:5] of a memory whose line is invalidated if it exists in the cache. If OP[3:0]=0100, TADDR[12:5] indicates the set, while TADDR[19:16] indicates which way to clear:

0001 Way #0

0010 Way #1

0100 Way #2

1000 Way #3

OP[3:0] Operation

This field determines which cache operations are performed.

0001 Invalidate all cache lines

0010 Invalidate one cache line using address

0100 Invalidate one cache line using set/way

EN Enable command

This enable bit must be written 1 to enable the command.

0 Disabled

1 Enabled

CACHE+08h Cache Hit Count 0 Lower Part CACHE_HCNT0L

Bit	31	30	29	28	27	26	25	24	23	22	21	20	19	18	17	16
Name	CHIT_CNT0[31:16]															
Type	R/W															
Reset	0															
Bit	15	14	13	12	11	10	9	8	7	6	5	4	3	2	1	0
Name	CHIT_CNT0[15:0]															
Type	R/W															

MTK Confidential Release for Konka

Reset	0

CACHE+0Ch Cache Hit Count 0 Upper Part

CACHE_HCNT0U

Bit	31	30	29	28	27	26	25	24	23	22	21	20	19	18	17	16
Name	RESERVED															
Type																
Reset																
Bit	15	14	13	12	11	10	9	8	7	6	5	4	3	2	1	0
Name	CHIT_CNT0[47:32]															
Type	R/W															
Reset	0															

When the CNTEN0 bit in CACHE_CON register is set to 1 (enabled), this register counts each cache hit until it is disabled. If the value increases over the maximum value (0xffffffffffff), the counter rolls over to 0 and continues counting. The 48-bit counter provides a recording time of 31 days even if MCU runs at 104 MHz and every cycle is a cache hit.

Note that before enabling the counter, it is recommended to write the initial value of zero to the counter.

CHIT_CNT0[47:0] Cache Hit Count 0

WRITE Writing any value to CACHE_HCNT0L or CACHE_HCNT0U clears CHIT_CNT0 to all zeros

READ Current counter value

CACHE+10h Cacheable Access Count 0 Lower Part

CACHE_CCNT0L

Bit	31	30	29	28	27	26	25	24	23	22	21	20	19	18	17	16
Name	CACC_CNT0[31:16]															
Type	R/W															
Reset	0															
Bit	15	14	13	12	11	10	9	8	7	6	5	4	3	2	1	0
Name	CACC_CNT0[15:0]															
Type	R/W															
Reset	0															

CACHE+14h Cacheable Access Count 0 Upper Part

CACHE_CCNT0U

Bit	31	30	29	28	27	26	25	24	23	22	21	20	19	18	17	16
Name	RESERVED															
Type																
Reset																
Bit	15	14	13	12	11	10	9	8	7	6	5	4	3	2	1	0
Name	CACC_CNT0[47:32]															
Type	R/W															
Reset	0															

When the CNTEN0 bit in CACHE_CON register is set to 1 (enabled), this register is incremented at each cacheable memory access (whether a cache hit or cache miss). If the value increases over the maximum value (0xffffffffffff), the counter rolls over to 0 and continues counting. For 104 MHz MCU speed, if all memory accesses are cacheable and cache hits, this counter overflows after (2^48) * 9.6ns = 31 days (the shortest time for the counter to overflow). In a more realistic case, the system encounters cache misses, non-cacheable accesses, and idle mode that delay the counter overflow.

CACC_CNT0[47:0] Cache Access Count 0

MTK Confidential Release for Konka

WRITE Writing any value to CACHE_CCNT0L or CACHE_CCNT0U clears CACC_CNT0 to all zeros

READ Current counter value

The best way to use CACHE_HCNT0 and CACHE_CCNT0 is to set zero as initial value in both registers, enable both counters (set CNTEN0 to 1), run a portion of program to be benchmarked, stop the counters and retrieve their values. During this period,

$$Cache\ hit\ rate = \frac{CACHE_HCNT}{CACHE_CCNT} \times 100\% .$$

The cache hit rate value may help tune the performance of an application program.

Note that CHIT_CNT0 and CACC_CNT0 only increment if the cacheable attribute is defined in MPU cacheable regions 0~3.

CACHE+18h Cache Hit Count 1 Lower Part

CACHE_HCNT1L

Bit	31	30	29	28	27	26	25	24	23	22	21	20	19	18	17	16
Name	CHIT_CNT1[31:16]															
Type	R/W															
Reset	0															
Bit	15	14	13	12	11	10	9	8	7	6	5	4	3	2	1	0
Name	CHIT_CNT1[15:0]															
Type	R/W															
Reset	0															

CACHE+1Ch Cache Hit Count 1 Upper Part

CACHE_HCNT1U

Bit	31	30	29	28	27	26	25	24	23	22	21	20	19	18	17	16
Name	RESERVED															
Type																
Reset																
Bit	15	14	13	12	11	10	9	8	7	6	5	4	3	2	1	0
Name	CHIT_CNT1[47:32]															
Type	R/W															
Reset	0															

When the CNTEN1 bit in CACHE_CON register is set to 1 (enabled), this register counts each cache hit until it is disabled. If the value increases over the maximum value (0xffffffffffff), the counter rolls over to 0 and continues counting. The 48-bit counter provides a recording time of 31 days even if MCU runs at 104 MHz and every cycle is a cache hit.

Note that before enabling the counter, it is recommended to write the initial value of zero to the counter.

CHIT_CNT1[47:0] Cache Hit Count

WRITE Writing any value to CACHE_HCNT1L or CACHE_HCNT1U clears CHIT_CNT1 to all zeros.

READ Current counter value

CACHE+20h Cacheable Access Count 1 Lower Part

CACHE_CCNT1L

Bit	31	30	29	28	27	26	25	24	23	22	21	20	19	18	17	16
Name	CACC_CNT1[31:16]															
Type	R/W															
Reset	0															
Bit	15	14	13	12	11	10	9	8	7	6	5	4	3	2	1	0

MTK Confidential Release for Konka

Name	CACC_CNT1[15:0]
Type	R/W
Reset	0

CACHE+24h Cacheable Access Count 1 Upper Part

CACHE_CCNT1U

Bit	31	30	29	28	27	26	25	24	23	22	21	20	19	18	17	16
Name	RESERVED															
Type																
Reset																
Bit	15	14	13	12	11	10	9	8	7	6	5	4	3	2	1	0
Name	CACC_CNT1[47:32]															
Type	R/W															
Reset	0															

When the CNTEN1 bit in CACHE_CON register is set to 1 (enabled), this register is incremented at each cacheable memory access (whether a cache hit or a cache miss). If the value increases over the maximum value (0xfffffffffff), the counter rolls over to 0 and continues counting. For 104 MHz MCU speed, if all memory accesses are cacheable and cache hits, this counter overflows after (2^48) * 9.6ns = 31 days (the shortest time for the counter to overflow). In a more realistic case, the system encounters cache misses, non-cacheable accesses, and idle mode that delay the counter overflow.

CACC_CNT1[47:0] Cache Access Count 1

WRITE Writing any value to CACHE_CCNT1L or CACHE_CCNT1U clears CACC_CNT1 to all zeros

READ Current counter value

The best way to use CACHE_HCNT1 and CACHE_CCNT1 is to set zero as initial value in both registers, enable both counters (set CNTEN1 to 1), run a portion of program to be benchmarked, stop the counters and retrieve their values. During this period,

$$Cache\ hit\ rate = \frac{CACHE_HCNT}{CACHE_CCNT} \times 100\% .$$

The cache hit rate value may help tune the performance of application program.

Note that CHIT_CNT1 and CACC_CNT1 only increment if the cacheable attribute is defined in MPU cacheable regions 4~7.

3.7 MPU

3.7.1 General Description

The purpose of MPU is to provide protection mechanism and cacheable indication of memory. The features of MPU include

- 8-entry protection settings.

Determine if MCU can read/write a memory region. If the setting does not allow MCU access to a particular memory address, MPU stops the memory access and issues an “ABORT” signal to MCU, forcing it to enter “abort” mode. The exception handler must then process the situation.

- 8-entry cacheable settings.

MTK Confidential Release for Konka

Determine if a memory region is cacheable or not. If cacheable, MCU keeps a small copy in its cache after read accesses. If MCU requires the same data later, it can retrieve the data from the high-speed local copy, instead of from low-speed external memory.

Normally the protection and cacheable attributes are combined together for the same address range, as in the example of ARM946E. For greater flexibility, the MPU in MT6228 provides independent protection and cacheable settings. That is to say, the memory regions defined for memory protection and for cacheable region are different and independent of each other.

The 4GB memory space is divided to 16 memory blocks of 256 MB, i.e., MB0~MB15. EMI uses MB0~MB3; SYSRAM uses MB4; IDMA uses MB5; peripherals and other hardware occupy MB6~MB9; TCM (tightly-coupled memory used by MCU exclusively) uses MB10. The characteristics of these memory blocks are listed below:

- Read/write protection setting

MB5 and above (except MB10) are always readable/writeable.

MB0~MB4 and MB10 are determined by MPU.

- Cacheable setting

MB4 and above are always non-cacheable.

MB0~MB3 are determined by MPU.

MTK Confidential Release for Konka

3.7.2 Protection Settings

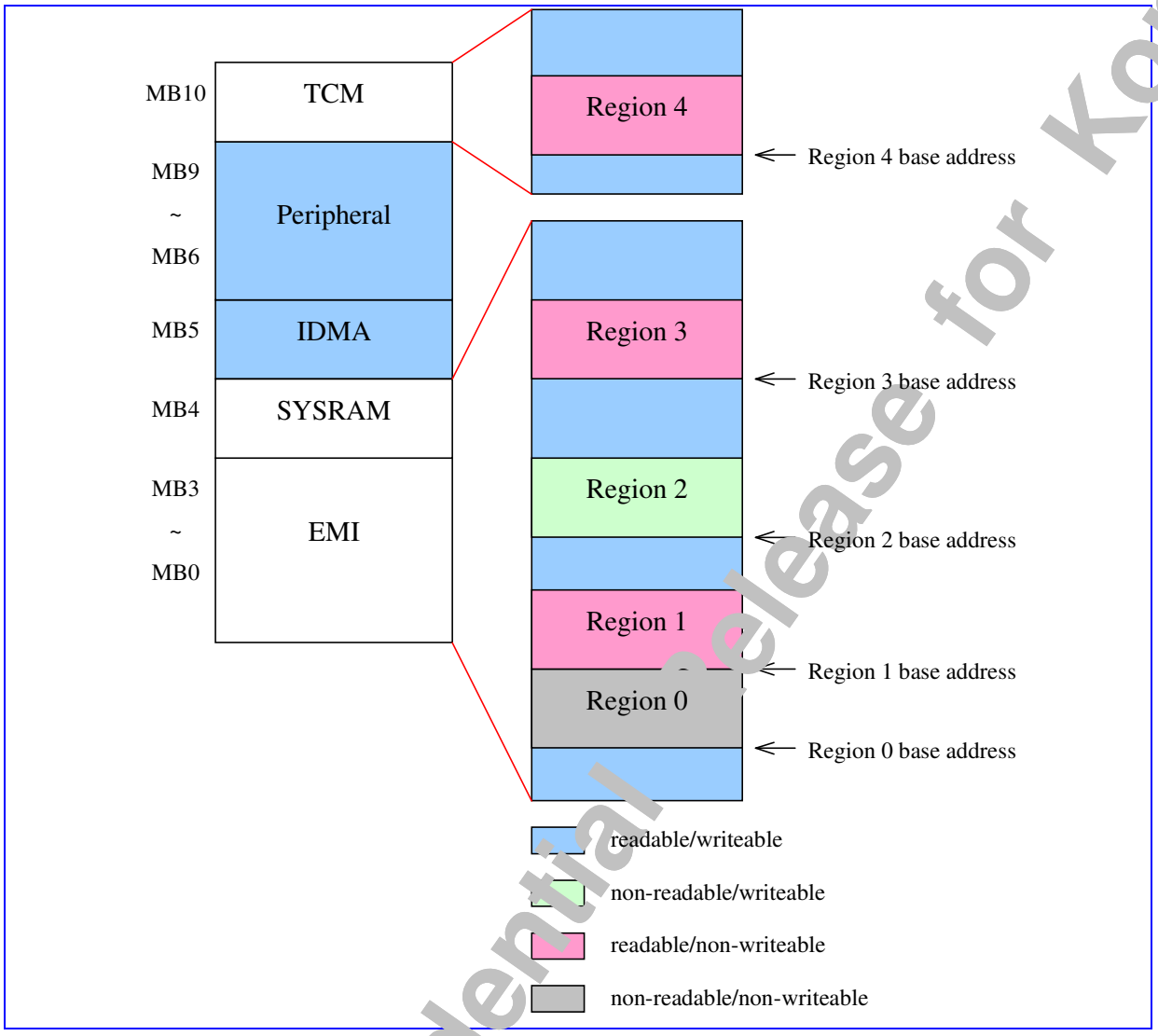

Figure 21 Protection setting

Figure 21 shows the protection setting in each memory block. Five regions are defined in the figure. Note that each region can be continuous or non-continuous to each other, and those address ranges not covered by any region are set to be readable/writeable automatically. One restriction exists: different regions must not overlap.

The user can define maximum 8 regions in MB0~MB4 and MB10. Each region has its own setting defined in a 32-bit register:

31 … 10	7	6	5 … 1	0
base address	00	prot	size	EN

- Region base address (22 bits)
- Region size (5 bits)
- Region protection attribute (2 bits)

MTK Confidential Release for Konka

- Enable bit (1 bit)

MPU aborts MCU if it accesses MB11~MB15 regions.

3.7.2.1 Region base address

The region base address defines the start of the memory region. The user needs only to specify several upper address bits. The number of valid address bits depends on the region size. The user must align the base address to a region-size boundary. For example, if a region size is 8 KB, its base address must be a multiple of 8KB.

3.7.2.2 Region size

The bit encoding of region size and its relationship with base address are listed as follows.

Region size	Bit encoding	Base address
1KB	00000	Bit [31:10] of region start address
2KB	00001	Bit [31:11] of region start address
4KB	00010	Bit [31:12] of region start address
8KB	00011	Bit [31:13] of region start address
16KB	00100	Bit [31:14] of region start address
32KB	00101	Bit [31:15] of region start address
64KB	00110	Bit [31:16] of region start address
128KB	00111	Bit [31:17] of region start address
256KB	01000	Bit [31:18] of region start address
512KB	01001	Bit [31:19] of region start address
1MB	01010	Bit [31:20] of region start address
2MB	01011	Bit [31:21] of region start address
4MB	01100	Bit [31:22] of region start address

Table 13 Region size and bit encoding

3.7.2.3 Region protection attribute

This attribute has two bits. The MSB determines read access permission, and the LSB write access permission.

Bit encoding	Permission
00	non-readable / non-writeable
10	readable / non-writeable
01	non-readable / writeable
11	readable / writeable

Table 14 Region protection attribute bit encoding

Note that bit encoding 11b allows full read/write permission, which is the case when no region is specified. So it is recommended to only specify regions with protection attribute 00b, 10b or 01b.

MTK Confidential Release for Konka

3.7.3 Cacheable Settings

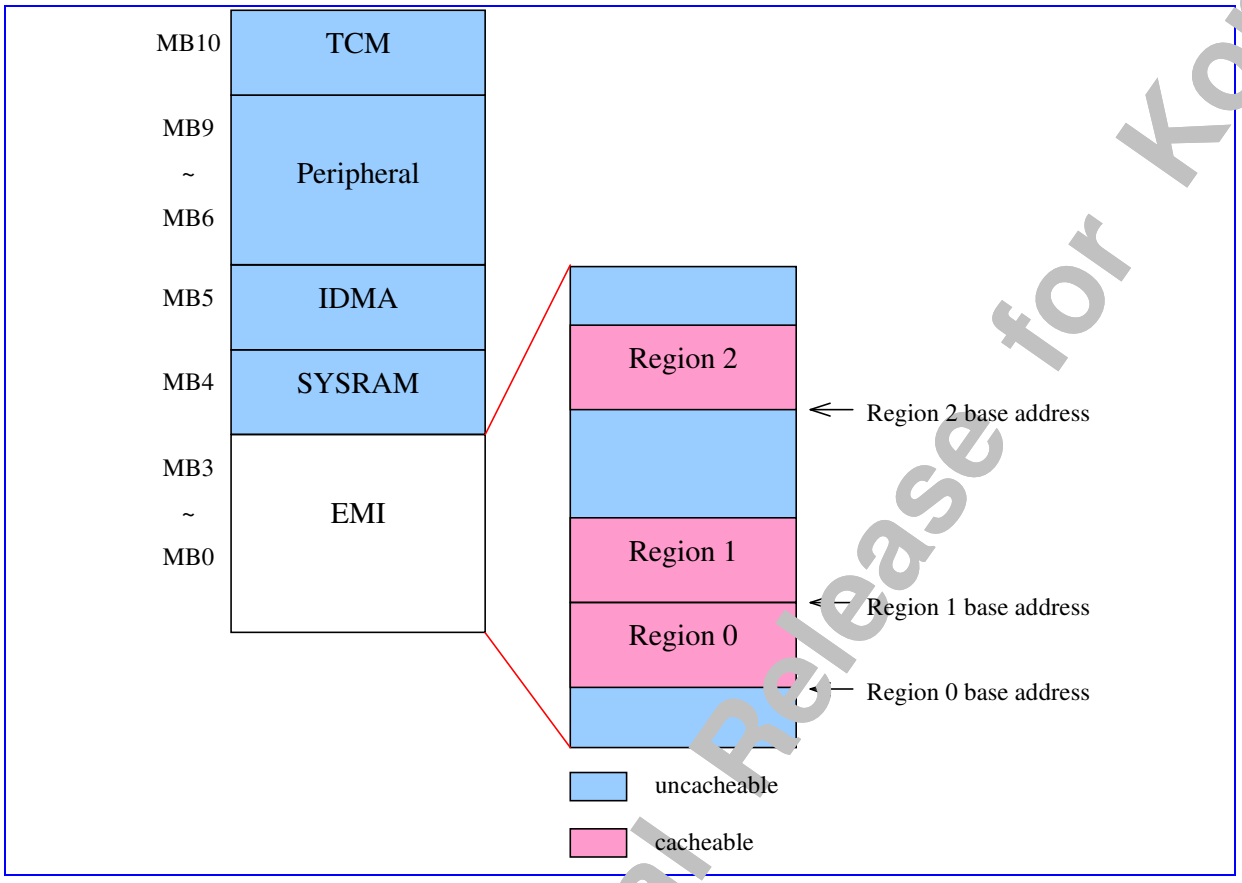

Figure 22 Cacheable setting

Figure 22 shows the cacheable setting in each memory block. Three regions are defined in the figure. Note that each region can be continuous or non-continuous to each other, and those address ranges not covered by any region are set to be non-cacheable automatically. One restriction exists: different regions must not overlap.

The user can define maximum 8 regions in MB0~MB3. Each region has its own setting defined in a 32-bit register:

31 ~ 10	9 ~ 6	5	5 ~ 1	0
base address	000	C	size	EN

- Region base address (22 bits)
- Region size (5 bits)
- Region cacheable attribute (1 bit)
- Enable bit (1 bit)

The region base address and region size bit encoding are the same as those of protection setting. The user must also align the base address to a region-size boundary. The cacheable attribute has the following meaning.

Bit encoding	Attribute
0	uncacheable
1	cacheable

MTK Confidential Release for Konka

Table 15 Region cacheable attribute bit encoding

3.7.4 MPU Register Definition

MPU base address is assumed 0x80701000 (subject to change).

MPU+0000h Protection setting for region 0 MPU_PROT0

Bit	31	30	29	28	27	26	25	24	23	22	21	20	19	18	17	16
Name	BASEADDR[31:16]															
Type	R W															
Reset																
Bit	15	14	13	12	11	10	9	8	7	6	5	4	3	2	1	0
Name	BASEADDR[15:10]								ATTR[1:0]		SIZE[4:0]					EN
Type	R W								R W		R W					R W
Reset									11		00000					0

This register sets protection attributes for region 0.

BASEADDR Base address of this region

ATTR Protection attribute

- **00** non-readable / non-writeable
- **01** non-readable / writeable
- **10** readable / non-writeable
- **11** readable / writeable

SIZE Size of this region

- **00000** 1 KB
- **00001** 2 KB
- **00010** 4 KB
- **00011** 8 KB
- **00100** 16 KB
- **00101** 32 KB
- **00110** 64 KB
- **00111** 128 KB
- **01000** 256 KB
- **01001** 512 KB
- **01010** 1 MB
- **01011** 2 MB
- **01100** 4 MB

EN Enable this region

- **0** Disable
- **1** Enable

MPU+0004h Protection setting for region 1 MPU_PROT1

Bit	31	30	29	28	27	26	25	24	23	22	21	20	19	18	17	16
Name	BASEADDR[31:16]															
Type	R W															
Reset																
Bit	15	14	13	12	11	10	9	8	7	6	5	4	3	2	1	0
Name	BASEADDR[15:10]								ATTR[1:0]		SIZE[4:0]					EN
Type	R W								R W		R W					R W
Reset									11		00000					0

MTK Confidential Release for Konka

This register sets protection attributes for region 1.

MPU+0008h Protection setting for region 2 MPU_PROT2

Bit	31	30	29	28	27	26	25	24	23	22	21	20	19	18	17	16
Name	BASEADDR[31:16]															
Type	R W															
Reset																
Bit	15	14	13	12	11	10	9	8	7	6	5	4	3	2	1	0
Name	BASEADDR[15:10]								ATTR[1:0]		SIZE[4:0]					E N
Type	R W								R W		R W					R W
Reset									11		00000					0

This register sets protection attributes for region 2.

MPU+000Ch Protection setting for region 3 MPU_PROT3

Bit	31	30	29	28	27	26	25	24	23	22	21	20	19	18	17	16
Name	BASEADDR[31:16]															
Type	R W															
Reset																
Bit	15	14	13	12	11	10	9	8	7	6	5	4	3	2	1	0
Name	BASEADDR[15:10]								ATTR[1:0]		SIZE[4:0]					E N
Type	R W								R W		R W					R W
Reset									11		00000					0

This register sets protection attributes for region 3.

MPU+0010h Protection setting for region 4 MPU_PROT4

Bit	31	30	29	28	27	26	25	24	23	22	21	20	19	18	17	16
Name	BASEADDR[31:16]															
Type	R W															
Reset																
Bit	15	14	13	12	11	10	9	8	7	6	5	4	3	2	1	0
Name	BASEADDR[15:10]								ATTR[1:0]		SIZE[4:0]					E N
Type	R W								R W		R W					R W
Reset									11		00000					0

This register sets protection attributes for region 4.

MPU+0014h Protection setting for region 5 MPU_PROT5

Bit	31	30	29	28	27	26	25	24	23	22	21	20	19	18	17	16
Name	BASEADDR[31:16]															
Type	R W															
Reset																
Bit	15	14	13	12	11	10	9	8	7	6	5	4	3	2	1	0
Name	BASEADDR[15:10]								ATTR[1:0]		SIZE[4:0]					E N
Type	R W								R W		R W					R W
Reset									11		00000					0

This register sets protection attributes for region 5.

MPU+0018h Protection setting for region 6 MPU_PROT6

Bit	31	30	29	28	27	26	25	24	23	22	21	20	19	18	17	16
Name	BASEADDR[31:16]															
Type	R W															
Reset																
Bit	15	14	13	12	11	10	9	8	7	6	5	4	3	2	1	0

MTK Confidential Release for Konka

Name	BASEADDR[15:10]			ATTR[1:0]	SIZE[4:0]	E N
Type	R W			R W	R W	R W
Reset				11	00000	0

This register sets protection attributes for region 6.

MPU+001Ch Protection setting for region 7 MPU_PROT7

Bit	31	30	29	28	27	26	25	24	23	22	21	20	19	18	17	16
Name	BASEADDR[31:16]															
Type	R W															
Reset																
Bit	15	14	13	12	11	10	9	8	7	6	5	4	3	2	1	0
Name	BASEADDR[15:10]								ATTR[1:0]		SIZE[4:0]					E N
Type	R W								R W		R W					R W
Reset									11		00000					0

This register sets protection attributes for region 7.

MPU+0040h Cacheable setting for region 0 MPU_CACHE0

Bit	31	30	29	28	27	26	25	24	23	22	21	20	19	18	17	16
Name	BASEADDR[31:16]															
Type	R W															
Reset																
Bit	15	14	13	12	11	10	9	8	7	6	5	4	3	2	1	0
Name	BASEADDR[15:10]									C	SIZE[4:0]					E N
Type	R W									R W	R W					R W
Reset										0	00000					0

This register sets cacheable attributes for region 0.

BASEADDR Base address of this region

C Cacheable attribute

- **0** Uncacheable
- **1** Cacheable

SIZE Size of this region

- **00000** 1 KB
- **00001** 2 KB
- **00010** 4 KB
- **00011** 8 KB
- **00100** 16 KB
- **00101** 32 KB
- **00110** 64 KB
- **00111** 128 KB
- **01000** 256 KB
- **01001** 512 KB
- **01010** 1 MB
- **01011** 2 MB
- **01100** 4 MB

EN Enable this region

- **0** Disable
- **1** Enable

MTK Confidential Release for Konka

MPU+0044h Cacheable setting for region 1 MPU_CACHE1

Bit	31	30	29	28	27	26	25	24	23	22	21	20	19	18	17	16
Name	BASEADDR[31:16]															
Type	R W															
Reset																
Bit	15	14	13	12	11	10	9	8	7	6	5	4	3	2	1	0
Name	BASEADDR[15:10]									C	SIZE[4:0]					E N
Type	R W									R W	R W					R W
Reset										0	00000					0

This register sets cacheable attributes for region 1.

MPU+0048h Cacheable setting for region 2 MPU_CACHE2

Bit	31	30	29	28	27	26	25	24	23	22	21	20	19	18	17	16
Name	BASEADDR[31:16]															
Type	R W															
Reset																
Bit	15	14	13	12	11	10	9	8	7	6	5	4	3	2	1	0
Name	BASEADDR[15:10]									C	SIZE[4:0]					E N
Type	R W									R W	R W					R W
Reset										0	00000					0

This register sets cacheable attributes for region 2.

MPU+004Ch Cacheable setting for region 3 MPU_CACHE3

Bit	31	30	29	28	27	26	25	24	23	22	21	20	19	18	17	16
Name	BASEADDR[31:16]															
Type	R W															
Reset																
Bit	15	14	13	12	11	10	9	8	7	6	5	4	3	2	1	0
Name	BASEADDR[15:10]									C	SIZE[4:0]					E N
Type	R W									R W	R W					R W
Reset										0	00000					0

This register sets cacheable attributes for region 3.

MPU+0050h Cacheable setting for region 4 MPU_CACHE4

Bit	31	30	29	28	27	26	25	24	23	22	21	20	19	18	17	16
Name	BASEADDR[31:16]															
Type	R W															
Reset																
Bit	15	14	13	12	11	10	9	8	7	6	5	4	3	2	1	0
Name	BASEADDR[15:10]									C	SIZE[4:0]					E N
Type	R W									R W	R W					R W
Reset										0	00000					0

This register sets cacheable attributes for region 4.

MPU+0054h Cacheable setting for region 5 MPU_CACHE5

Bit	31	30	29	28	27	26	25	24	23	22	21	20	19	18	17	16
Name	BASEADDR[31:16]															
Type	R W															
Reset																
Bit	15	14	13	12	11	10	9	8	7	6	5	4	3	2	1	0
Name	BASEADDR[15:10]									C	SIZE[4:0]					E N
Type	R W									R W	R W					R W

MTK Confidential Release for Konka

Reset				0	00000			0

This register sets cacheable attributes for region 5.

MPU+0058h Cacheable setting for region 6 MPU_CACHE6

Bit	31	30	29	28	27	26	25	24	23	22	21	20	19	18	17	16
Name	BASEADDR[31:16]															
Type	R W															
Reset																
Bit	15	14	13	12	11	10	9	8	7	6	5	4	3	2	1	0
Name	BASEADDR[15:10]									C	SIZE[4:0]					E N
Type	R W									R W	R W					R W
Reset										0	00000					0

This register sets cacheable attributes for region 6.

MPU+005Ch Cacheable setting for region 7 MPU_CACHE7

Bit	31	30	29	28	27	26	25	24	23	22	21	20	19	18	17	16
Name	BASEADDR[31:16]															
Type	R W															
Reset																
Bit	15	14	13	12	11	10	9	8	7	6	5	4	3	2	1	0
Name	BASEADDR[15:10]									C	SIZE[4:0]					E N
Type	R W									R W	R W					R W
Reset										0	00000					0

This register sets cacheable attributes for region 7.

3.8 Data Cache

3.8.1 General Description

The data cache is an 8-kilobyte, 8-way write-back cache that bridges the multi-layer Advanced High-speed Bus (AHB) and the External Memory Interface (EMI). Requests from the AHBs are processed by the data cache before being forwarded to the external bus. The two main objectives of the data cache are to reduce activity on the external bus, and to maximize the throughput of the external bus.

The data cache contains a copy of part of the external memory. If the required data is in data cache, the data is returned from the cache without issuing a request to external memory. This intervention on the cache's part reduces activity on the external bus without losing data throughput. The data cache converts all types of bus read requests into a single type of 16-byte burst read request for the EMI. The EMI converts a 16-byte burst read request to a 16-byte page-mode or 16-byte burst-mode access request on the external bus, depending on the type of memory on the external bus. Page-mode and burst-mode access are more efficient ways to access external memory. The system can retrieve more data in the same amount of time, thereby increasing throughput. The simple request types also simplify the EMI's design, reducing cost and improving timing.

If the data request is a data cache hit (the requested data is found in the cache), the data is returned from the data cache in one cycle for the DMA and GMC busses, and in two cycles for an MCU running at 104MHz. These latencies are much shorter than for an external bus access.

Figure 23 shows an overview of the bus architecture. The data cache serves all of the bus masters and multi-media engines via the three AHBs.

MTK Confidential Release for Konka

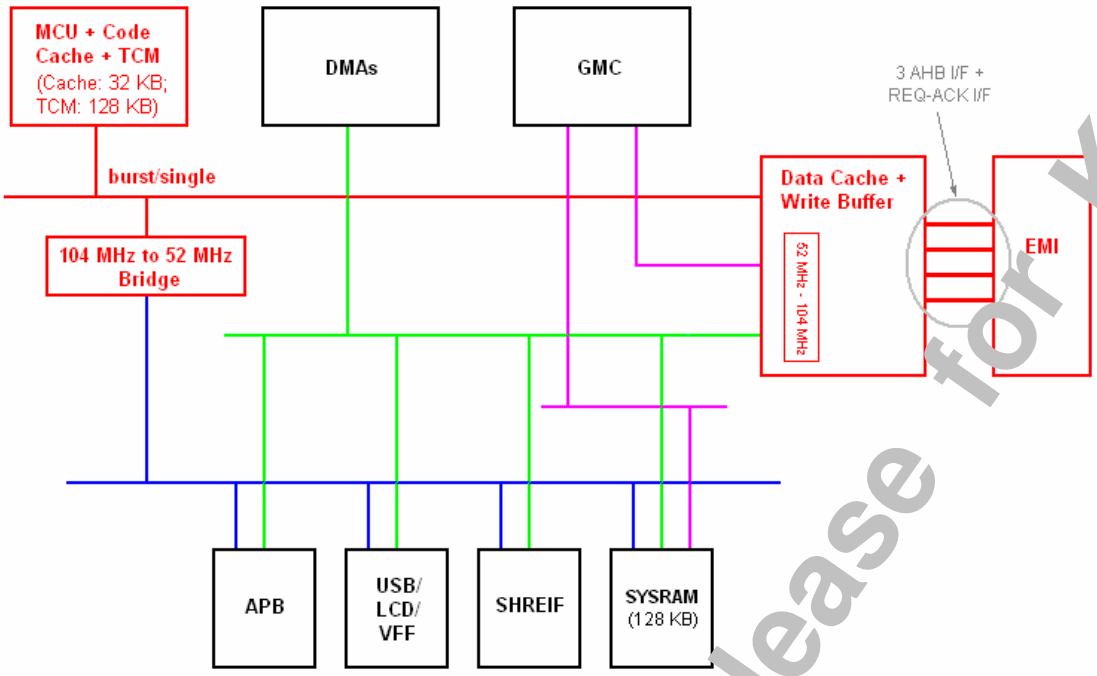

Figure 23 Overview of the Bus Architecture

The data cache and EMI are connected by four buses. These four interfaces operate independently of each other; requests from the interfaces can be issued at the same time. Three of the four buses are standard AHBs for reading data from external memory, and the other is a request-acknowledgement interface for the write buffer. The EMI can see the next request while current request is still being processed. With the capability of seeing pending requests, the EMI can optimize its access schedule to make memory access more efficient.

The data cache comprises four parts: the AHB interface, the main controller, the line filler, and the write buffer (**Figure 24**).

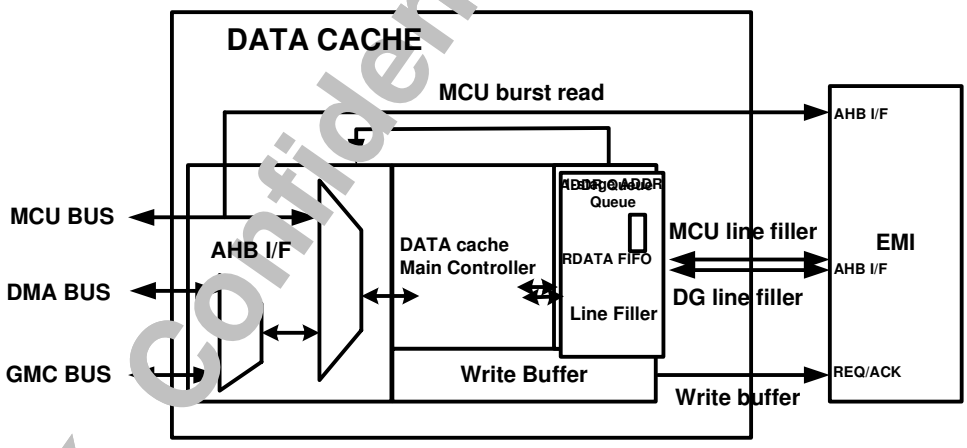

Figure 24 Data Cache Architecture

The AHB interface's responsibilities are to interface with the AHBs, to prioritize incoming requests from the buses, and to shake hands with the Line Filler for missed data. Requests from the three buses are prioritized before entering the main controller of the cache: requests from the MCU bus take precedence over the requests from the DMA and GMC buses.

MTK Confidential Release for Konka

The main controller is the core of the data cache: its sophisticated state machine is designed to handle the control of cache TAG memory and DATA memory; hand-shaking with the AHB interface, the write buffer, and line fillers; and debugging functions. The main controller features a "hit under miss" non-blocking cache: a cache miss from an AHB does not block the other buses' access to the cache. When a cache miss occurs, the main controller enters Line Fill Phase: the replaced cache line is flushed (written to target memory as required), and the main controller issues a line fill request to the Line Filler. Once the Line Filler accepts the request, the main control becomes available again for access while the line fill is executed in background. The data cache is still accessible during the line fill.

Two Line Fillers are implemented. They allow two cache lines being replaced concurrently, while leaving the cache still accessible in the meantime. This feature is especially useful for a system with many bus masters. Missed data is returned from Line Filler to the AHB interface directly to reduce the latency.

The data cache contains an eight-stage write buffer. Each stage stores up to 32-bit data. The write buffer favors sequential tags for each buffer stage. Data with sequential tags has the highest priority in the EMI: the EMI can write data sequentially into the same row of the SDRAM memory, reducing the write time by saving on the time required to pre-charge and activate a row.

3.8.2 Specification and Main Features

The MT6228 data cache implementation includes the following features:

- **8-kilobyte, 8-way write-back data cache with random cache replacement scheme.**
- **64 cache lines for each cache way, and 16 bytes per cache line.**
- **2 dirty bits per cache line.**

The two dirty bits indicate whether the upper 8-byte and lower 8-byte segment of a cache line have been changed (**Figure 25**). Only half of the cache line is flushed before replacement if that half-line has been changed, shortening the access latency and reducing activity on the external memory bus.

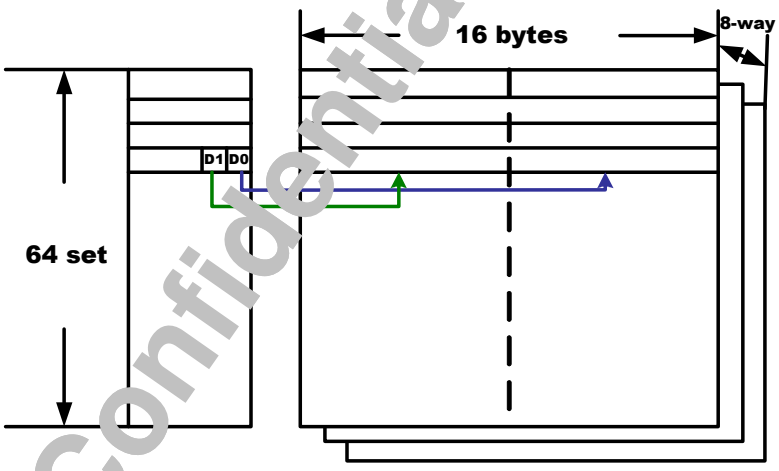

Figure 25 Two Dirty Bits per Cache Line

- **Four read/write ports to the EMI.**

The EMI sees the next queued memory access request before the current request has been completed, and pre-schedules the access based on requests from the four access ports. This capability is especially useful for SDRAM type memory, where pre-charge and row activation for the next request can be executed in advance to shorten latency.

MTK Confidential Release for Konka

- **Missed data is returned first.**

The data requested during a cache miss is filled by the line filler and returned to the requestor starting at the missed data.

For example: the MCU requests data at address 0x4, but the request results in a cache miss. The data cache dispatches a 16-byte burst request starting from 0x4 to the EMI. The data located at address 0x4 is returned first, followed by that at addresses 0x8, 0xC, then 0x0 (**Figure 26**). The return of the requested data first shortens the access latency.

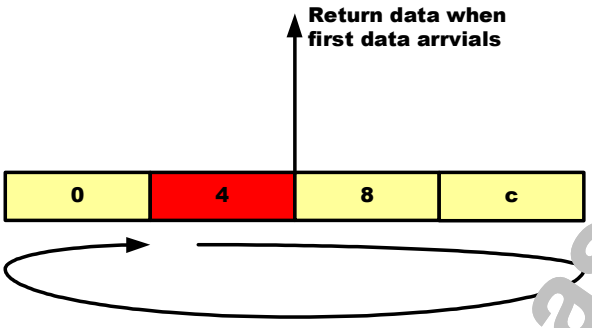

Figure 26 Missed Data Is Returned First

- **Background cache line fill.**

The data cache has two stand-alone line fillers, each of which can execute a cache line fill upon request from the main controller individually. Other buses can still access the data cache during the line fill, maximizing throughput of the data cache.

For example: two sequential requests come from the MCU and the GMC. The MCU request is accepted before GMC and causes a cache miss. The cache main controller allocates a cache line for the MCU data. If the cache line is dirty, the main controller flushes the line first, then hands over the line fill request to the Line Filler. The main controller is now available to accept the next request from the GMC (**Figure 27**). If the GMC request results in another cache miss, the line fill request is issued to the second Line Filler. The main controller is still available to process the next request from a bus. The main controller is blocked only when a third cache miss occurs before the two previous line fills have been completed.

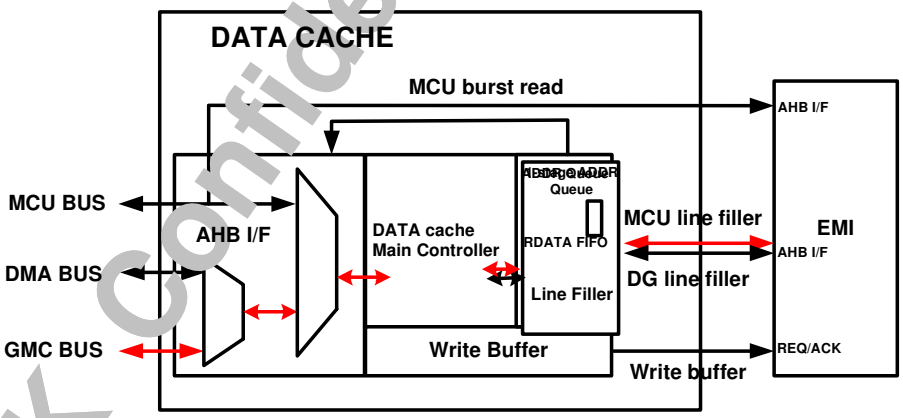

Figure 27 Background Cache Line Fill

MTK Confidential Release for Konka

- **Debug support.**

The data cache supports a variety of debugging functions and cache tag and data memory read access via the Advanced Peripheral Bus (APB). The following functions can be executed anywhere and anytime without restriction:

  - Invalidate all cache lines.
  - Invalidate and clean all cache lines.
  - Invalidate a single cache line by specifying the set/way or address.
  - Invalidate and clean a single cache line by specifying the set/way or address.
  - Read a cache tag by specifying the set/way or address.
  - Read cache data by specifying the set/way or address.
  - Drain the write buffer.

- **Write buffer flushed before MCU burst read (FBBR mode).**

The data cache is specially optimized for MCU code execution, thus the user is recommended to set only code and read-only (RO) data as code cache cacheable (refer to the Code Cache section for the definition of a cacheable region). For regions of cacheable memory, requests are forwarded directly to the EMI through the "MCU burst read" path (**Figure 24**). The requests can be accepted before write buffer is flushed, shortening access latency.

If read-write (RW) data is set as code cache cacheable, data inconsistency may occur. Consider a write request (WB2) followed by a read request (L1C) with the same memory address, both issued by the MCU (**Figure 28 (a)**). The write data (WB2) is queued in the data cache's write buffer, and the read request is forwarded directly to the EMI. Because the write buffer queue contains other data ahead of WB2, WB2 is actually written to target memory after L1C has been executed. Therefore, the MCU receives outdated data, and the consistency problem occurs.

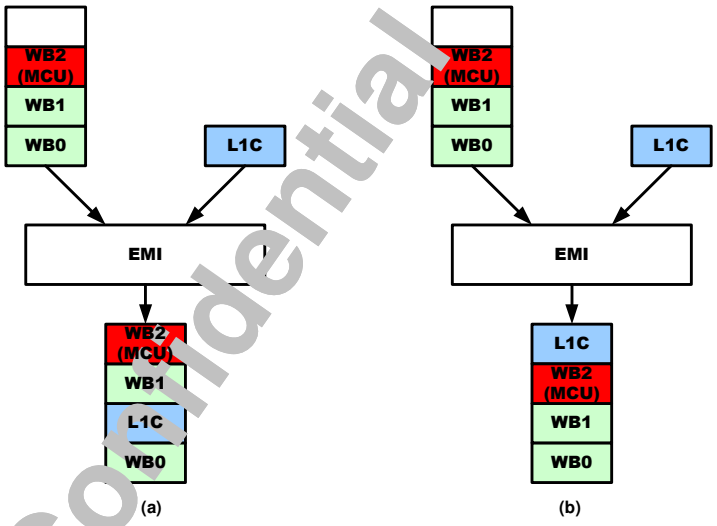

Figure 28 Data Consistency Problem for Cacheable RW

The data cache provides an Flush Buffer Before Read (FBBR) mode that allows RW data to be set as code cache cacheable without compromising data consistency. When in FBBR mode, MCU read requests are not issued to the EMI until the write buffer is empty. This suspension of the read request prevents it from being executed before the write request and solves the data consistency problem. **Figure 28(b)** shows L1C executed after WB2.

Note that in FBBR mode, more cycles are required to complete a read request because of flush cycles before the read operation. Thus MCU access latency may increase, and MCU performance may be reduced.

MTK Confidential Release for Konka

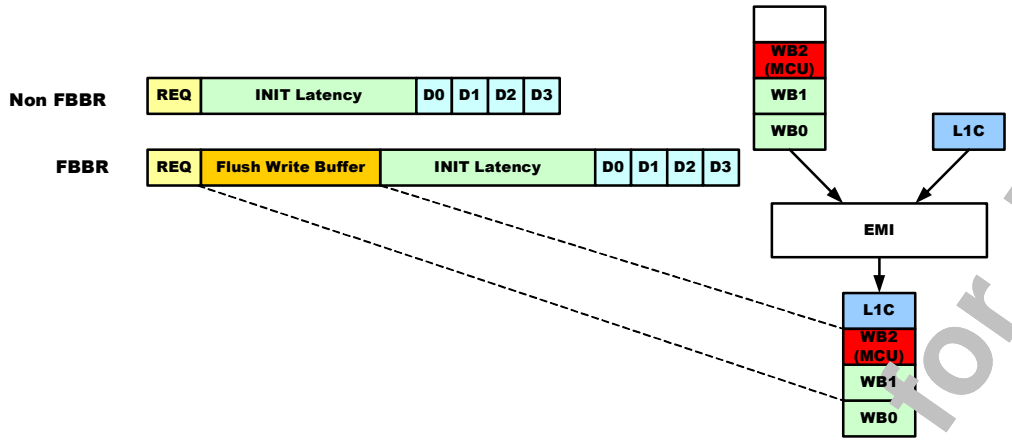

Figure 29 Increased Latency of FBBR Mode Due to Write Buffer Flush

- **DMA and GMC AHB interfaces allow the clock ratio to switch dynamically between 1:2 and 1:1.**

The maximum clock rate of the DMA and GMC buses is 52 MHz; the maximum clock rate of data cache is 104 MHz. A clock ratio bridge is implemented in the AHB interface of the data cache to convert requests and data to different clock rates. The clock ratio of the DMA or GMC bus and data cache can be either 1:2 or 1:1. If the data cache clock rate is lower than 52 MHz, the clock rate of DMA or GMC bus must be the same as that of the data cache and the clock ratio is 1:1. If the data cache clock rate is 104 MHz, the AHB's clock rate can only be 52 MHz, and the clock ratio is 1:2. The clock ratio can be switched between 1:2 and 1:1 dynamically without restriction, reducing the overhead for system clock rate switching software.

3.8.3 NOR flash Programming

When data cache is enabled, an external memory access request may not actually result in physical transaction occuring on external memory bus. For instance, when MCU issues a read request to external memory, if the request hits data cache, the data will be returned from data cache directly instead of reading it from external memory. This means no request took place on the external bus.

Figure 30 illustrates the normal NOR flash programming sequence. These access must be actually executed to the NOR flash memory interface. However, as mentioned before, an internal bus request may not be reflected on the external bus when caches are enabled, and will therefore result in MCU not being able to program the NOR flash.

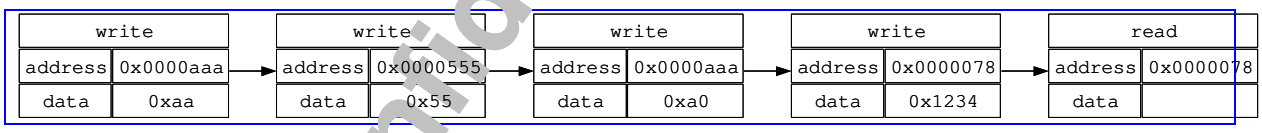

Figure 30 NOR flash programming sequence

To solve the problem, an IO command mode is designed in data cache. When data cache receive a memory request with "1" at address bit 26, data cache will treat the request as an IO command. For an IO command, data cache will read or write the external memory immediately regardless of the hit/miss condition. In addition, data cache will invalidate the hit cache line for an IO write command. This can prevent data inconsistence between data cache and external memory. Next read data from the same address will return from external memory, not from data cache.

illustrates the NOR flash programming using IO command. To issue an IO command, software has to OR original address bit 26 with "1". In the example, the address to be programmed is 0x0078. To program it with IO command, the address bit 26 is set to "1", and the address becomes 0x4000078.

MTK Confidential Release for Konka

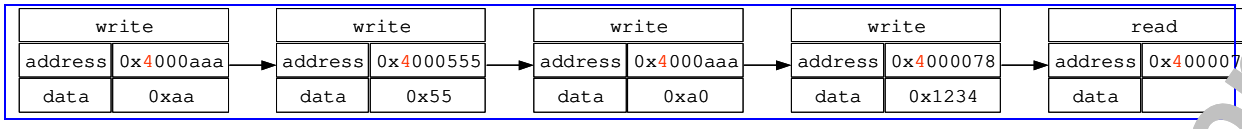

Figure 31 IO command for NOR flash programming

3.8.4 Register Definitions

Table 16 summarizes the registers used by the data cache.

Register Address	Register Function	Acronym
L2C+0000h	Data cache control register	**L2C_CON**
L2C+0004h	Data cache target register	**L2C_TARGET**
L2C+0008h	Data cache status register	**L2C_STA**
L2C+000Ch	Data cache tag register	**L2C_TAG**
L2C+0010h	Data cache data register	**L2C_DATA**
L2C+0014h	Data cache mode register	**L2C_MODE**

Table 16 Data Cache Registers

L2C+0000h Data Cache Control Register L2C_CON

Bit	31	30	29	28	27	26	25	24	23	22	21	20	19	18	17	16
Name	EN															
Type	W															
Bit	15	14	13	12	11	10	9	8	7	6	5	4	3	2	1	0
Name					VALUE								CMD			
Type					R/W								R/W			

CMD Requests an operation on the data cache. Four functions are provided:

0000 Invalidate and clean the data cache.

To invalidate means to clear the valid bit of a cache line. To clean means to write the cache line data to destination memory if dirty.

VALUE[3:0]	Function
0100	Invalidate a single cache line with the set/way specified in the L2C_TARGET register.
0110	Invalidate and clean a single cache line with the set/way specified in the L2C_TARGET register.
1100	Invalidate a single cache line with the address specified in the L2C_TARGET register. The data cache finds the cache line with the same address and invalidates it.
1110	Invalidate and clean a single cache line with the address specified in the L2C_TARGET register. The data cache finds the cache line with the same address, and cleans and invalidates it.
0101	Invalidate all cache lines.
0111	Invalidate and clean all cache lines.

0001 Read the data cache. Either TAG or DATA can be read.

VALUE[1:0]	Function
00	Read a TAG with the set/way specified in the L2C_TARGET register.
01	Read cache data with the set/way specified in the L2C_TARGET register.
10	Read a TAG with address specified in the L2C_TARGET register.

MTK Confidential Release for Konka

11	Read cache data at the address specified in the L2C_TARGET register.

0010 Drain the write buffer.

0011 Configure the MODE bit.

VALUE

Bit	7	6	5	4	3	2	1	0
Name				**FBBR**	**DIRTYALL**	**GATEDG**	**MPEG4**	**BYPASS**
Type				W	W	W	W	W
Reset				0	0	0	0	1

BYPASS Bypass the data cache. The write buffer is still activated.

MPEG4 MPEG4 mode.

GATEDG Gate DMA and GMC requests. Any requests from the DMA and GMC are suspended.

DIRTYALL Normally only half a cache line is set as dirty when data is written to only half of the cache line. When this mode is enabled, the entire cache line is set as dirty when data is written to the line.

FBBR Flush the write buffer before issuing an MCU burst read (L1 cache line fill) to the EMI.

Others Reserved.

VALUE Cooperates with CMD to specify a function.

EN Executes the command specified by CMD and VALUE. While EN is set, the values of CMD and VALUE are interpreted as a command: the data cache executes the command CMD with the parameter VALUE.

L2C+0004h Data Cache Target Register (SET/WAY) L2C_TARGET

Bit	31	30	29	28	27	26	25	24	23	22	21	20	19	18	17	16
Name				**SET**												
Type				R/W												
Bit	15	14	13	12	11	10	9	8	7	6	5	4	3	2	1	0
Name							**IDX**						**WORD**			
Type							R/W						R/W			

L2C+0004h Data Cache Target Register (ADDRESS) L2C_TARGET

Bit	31	30	29	28	27	26	25	24	23	22	21	20	19	18	17	16
Name			**TAG**													
Type			R/W													
Bit	15	14	13	12	11	10	9	8	7	6	5	4	3	2	1	0
Name	**IDX**												**WORD**			
Type	R/W								R/W				R/W			

Specifies a SET/WAY or address for a single cache invalidation or TAG/DATA read.

L2C+0008h Data Cache Status Register L2C_STA

Bit	31	30	29	28	27	26	25	24	23	22	21	20	19	18	17	16
Name																
Type																
Reset																
Bit	15	14	13	12	11	10	9	8	7	6	5	4	3	2	1	0
Name														**MISS**	**GATEDG**	**BUSY**
Type														R	R	R
Reset														0	0	0

BUSY Indicates that the current command is still being processed. The register is cleared when the current command is finished.

MTK Confidential Release for Konka

GATEDG Indicates that DMA and GMC requests are gated. GATEDG is valid only when the BUSY register is clear.

MISS Indicates HIT or MISS of the commands for a single cache invalidation or TAG/DATA read. MISS is valid only when the BUSY register is clear.

L2C+000Ch Data Cache TAG Register L2C_TAG

Bit	31	30	29	28	27	26	25	24	23	22	21	20	19	18	17	16
Name										TAG						
Type										R						
Bit	15	14	13	12	11	10	9	8	7	6	5	4	3	2	1	0
Name	TAG															
Type	R															

When a read TAG command is executed and finished, the TAG can be read from the L2C_TAG register.

L2C+0010h Data Cache DATA Register L2C_DATA

Bit	31	30	29	28	27	26	25	24	23	22	21	20	19	18	17	16
Name	DATA															
Type	R															
Bit	15	14	13	12	11	10	9	8	7	6	5	4	3	2	1	0
Name	DATA															
Type	R															

When a read DATA command is executed and finished, DATA can be read from the L2C_DATA register.

L2C+0014h Data Cache Mode Register L2C_MODE

Bit	31	30	29	28	27	26	25	24	23	22	21	20	19	18	17	16
Name																
Type																
Reset																
Bit	15	14	13	12	11	10	9	8	7	6	5	4	3	2	1	0
Name												FBBR	DIRTYALL	GATEDG	MPEG4	BYPASS
Type												R	R	R	R	R
Reset												0	0	0	0	1

The L2C_MODE register shows the data cache's operation mode. The setting can be changed by programming the L2C_CON register. Refer to the L2C_CON register description for details.

BYPASS Bypass the data cache. The write buffer is still activated.

MPEG4 MPEG4 mode. This mode is valid only when the data cache is enabled (BYPASS = 0).

GATEDG Gate DMA and GMC requests. Any requests from the DMA and GMC are suspended.

DIRTYALL Normally only half of a cache line is set as dirty when data is written to only half of the cache line. When this mode is enabled, the entire cache line is set as dirty when data is written to the line.

FBBR Flush the write buffer before issuing an MCU burst read (L1 cache line fill) to the EMI.

3.8.5 Initialize and Enable the Data Cache

- **Invalidate all cache lines.**

Note: DO NOT CLEAN the cache during the first initialization, or the content of the destination memory (external memory) may be overwritten with unpredictable values.

MTK Confidential Release for Konka

- **Set BYPASS to '0' to enable the data cache.**

3.9 Internal Memory Interface

3.9.1 System RAM

MT6228 provides one 128 KByte size of on-chip memory modules acting as System RAM for data access with low latency. Such a module is composed of one high speed synchronous SRAMs with AHB Slave Interface connected to the system backbone AHB Bus, as shown in **Figure 32**. The synchronous SRAM operates on the same clock as the AHB Bus and is organized as 32 bits wide with 4 byte-write signals capable for byte operations. The SRAM macro has limited repair capability. The yield of SRAM is improved if the defects inside it can be repaired during testing.

3.9.2 System ROM

The System ROM is primarily used to store software program for Factory Programming. However, due to its advantageous low latency performance, some of the timing critical codes are also placed in System ROM. This module is composed of high-speed VIA ROM with an AHB Slave Interface connected to a system backbone AHB, shown in **Figure 32**. The module operates on the same clock as the AHB and has a 32-bit wide organization.

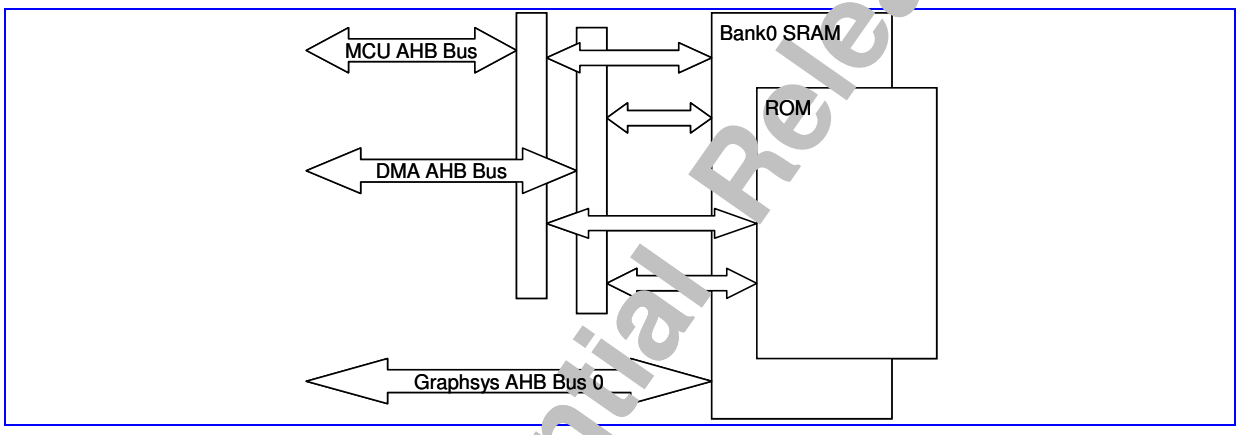

Figure 32: Block Diagram of the Internal Memory Controller

3.10 External Memory Interface

3.10.1 General Description

MT6228 incorporates a powerful and flexible memory controller, External Memory Interface, to connect with a variety of memory components. This controller provides one generic access scheme for Flash Memory, SRAM, PSRAM and CellularRAM and another access scheme for MobileRAM. Up to 4 memory banks can be supported simultaneously, BANK0-BANK3, with a maximum size of 64MB each.

Since most of the Flash Memory, SRAM, PSRAM and CellularRAM have similar AC requirements, a generic configuration scheme to interface them is desired. This way, the software program can treat different components by simply specifying certain predefined parameters. All these parameters are based on the cycle time of system clock.

The interface definition based on such a scheme is listed in **Table 17**. Note that, this interface always works with data in Little Endian format for all types of access.

MTK Confidential Release for Konka

Signal Name	Type	Description
EA[25:0]	O	Address Bus
ED[15:0]	I/O	Data Bus
EWR#	O	Write Enable Strobe/MobileRAM Command Input
ERD#	O	Read Enable Strobe
ELB#	O	Lower Byte Strobe/MobileRAM Data Input & Output Mask
EUB#	O	Upper Byte Strobe/MobileRAM Data Input & Output Mask
ECS[3:0]#	O	BANK0~BANK3 Selection Signal
EPDN	O	PSRAM Power Down Control Signal
ECLK	O	Flash, SRAM, PSRAM and CellularRAM Clock Signal
EADV#	O	Flash, SRAM, PSRAM and CellularRAM Address Valid Signal
EWAIT	I	Flash, SRAM, PSRAM and CellularRAM Wait Signal Input
EDCLK	O	MobileRAM Clock Signal
ECKE	O	MobileRAM Clock Enable Signal
ERAS#	O	MobileRAM Row Address Signal
ECAS#	O	MobileRAM Column Address Signal

Table 17 **External Memory Interface Signal of MT6228**

REGISTER ADDRESS	REGISTER NAME	SYNONYM
EMI + 0000h	EMI Control Register for BANK0	EMI_CONA
EMI + 0008h	EMI Control Register for BANK1	EMI_CONB
EMI + 0010h	EMI Control Register for BANK2	EMI_CONC
EMI + 0018h	EMI Control Register for BANK3	EMI_COND
EMI + 0040h	EMI Control Register 0 for MobileRAM	EMI_CONI
EMI + 0048h	EMI Control Register 1 for MobileRAM	EMI_CONJ
EMI + 0050h	EMI Control Register 2 for MobileRAM	EMI_CONK
EMI + 0058h	EMI Control Register 3 for MobileRAM	EMI_CONL
EMI + 0060h	EMI Remap Control Register	EMI_REMAP
EMI + 0068h	EMI General Control Register 0	EMI_GENA
EMI + 0070h	EMI General Control Register 1	EMI_GENB

Table 18 External Memory Interface Register Map

3.10.2 Register Definitions

EMI+0000h EMI Control Register for BANK 0 EMI_CONA

Bit	31	30	29	28	27	26	25	24	23	22	21	20	19	18	17	16
Name	C2WS			C2WH				C2RS			PRLT				CLKEN	PMODE
Type	R/W			R/W				R/W			R/W				R/W	R/W
Reset	0			0				0			0				0	0
Bit	15	14	13	12	11	10	9	8	7	6	5	4	3	2	1	0
Name	DW	RBLN	BW	WST					WAIT	PSIZE		RLT				
Type	R/W	R/W	R/W	R/W					R/W	R/W		R/W				
Reset	0	1	0	0					0	0		7				

MTK Confidential Release for Konka

EMI+0008h EMI Control Register for BANK 1 EMI_CONB

Bit	31	30	29	28	27	26	25	24	23	22	21	20	19	18	17	16
Name	C2WS			C2WH				C2RS			PRLT				CLKEN	PMODE
Type	R/W			R/W				R/W			R/W				R/W	R/W
Reset	0			0				0			0				0	0
Bit	15	14	13	12	11	10	9	8	7	6	5	4	3	2	1	0
Name	DW	RBLN	BW	WST					WAIT	PSIZE		RLT				
Type	R/W	R/W	R/W	R/W					R/W	R/W		R/W				
Reset	0	1	0	0					0	0		7				

EMI+0010h EMI Control Register for BANK 2 EMI_CONC

Bit	31	30	29	28	27	26	25	24	23	22	21	20	19	18	17	16
Name	C2WS			C2WH				C2RS			PRLT				CLKEN	PMODE
Type	R/W			R/W				R/W			R/W				R/W	R/W
Reset	0			0				0			0				0	0
Bit	15	14	13	12	11	10	9	8	7	6	5	4	3	2	1	0
Name	DW	RBLN	BW	WST					WAIT	PSIZE		RLT				
Type	R/W	R/W	R/W	R/W					R/W	R/W		R/W				
Reset	0	1	0	0					0	0		7				

EMI+0018h EMI Control Register for BANK 3 EMI_COND

Bit	31	30	29	28	27	26	25	24	23	22	21	20	19	18	17	16
Name	C2WS			C2WH				C2RS			PRLT				CLKEN	PMODE
Type	R/W			R/W				R/W			R/W				R/W	R/W
Reset	0			0				0			0				0	0
Bit	15	14	13	12	11	10	9	8	7	6	5	4	3	2	1	0
Name	DW	RBLN	BW	WST					WAIT	PSIZE		RLT				
Type	R/W	R/W	R/W	R/W					R/W	R/W		R/W				
Reset	0	1	0	0					0	0		7				

For each bank (BANK0-BANK3), a dedicated control register is associated with the bank controller. These registers have timing parameters that help the controller to convert memory access into proper timing waveform. Note that, except for parameters CLKEN, PMODE, DW, RBLN, BW, WAIT and PSIZE, all the other parameters specified explicitly are based on system clock speed in terms of cycle count.

RLT Read Latency Time

Specifies the number of wait-states to insert in the bus transfer to the requesting agent. Such a parameter must be chosen carefully to meet the timing specification requirements for common parameter tACC(address access time) for asynchronous-read device and tCWT(chip select low to wait valid time) for synchronous-read device. An example is shown below.

MTK Confidential Release for Konka

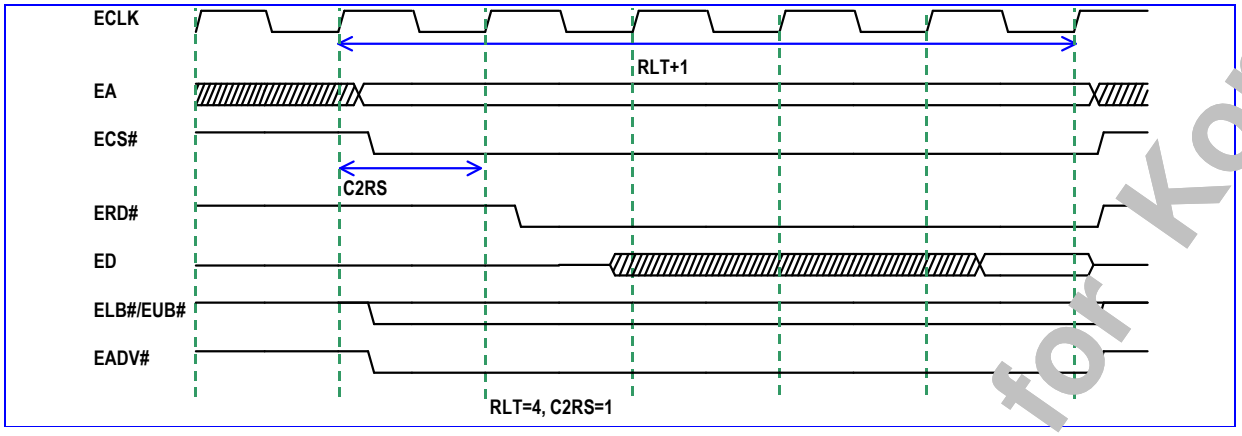

Figure 33 Read Wait State Timing Diagram for Asynchronous-Read Memory (CLKEN=0)

Access Time	Read Latency Time in 104 MHz unit
65 ns ~ 70 ns	7
85 ns ~ 90 ns	9
110 ns ~ 120 ns	12

Table 19 Reference value of Read Latency Time for Asynchronous-Read memory Devices

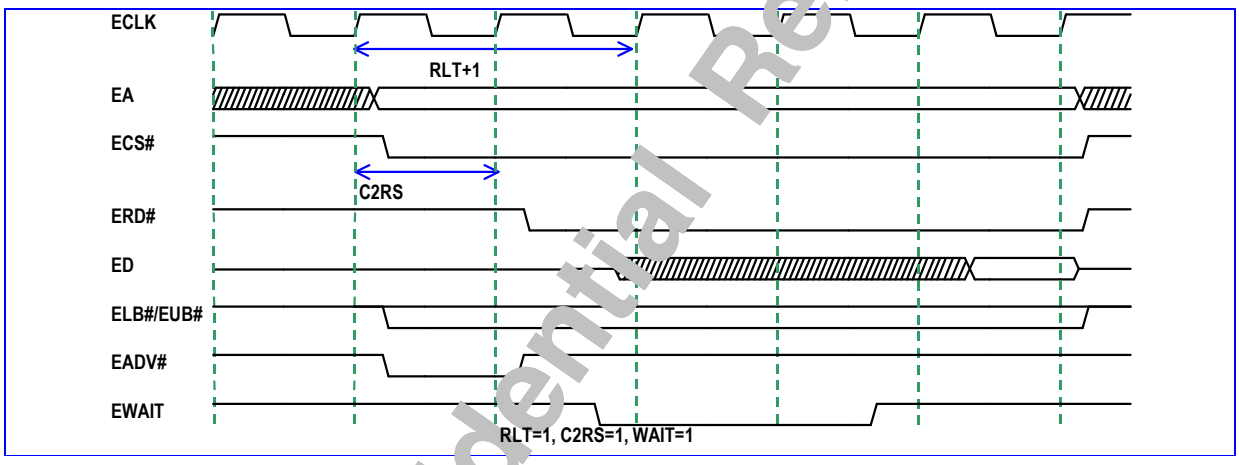

Figure 34 Read Wait State Timing Diagram for Synchronous-Read Memory (CLKEN=1)

ECS# Low to EWAIT Valid	Read Latency Time in 104 MHz unit
0 ns ~ 10 ns	1
10 ns ~ 20 ns	2

Table 20 Reference value of Read Latency Time for Synchronous-Read Devices

PSIZE This bit position describes the page size behavior of that the Page Mode enabled device.

- **0** 8 byte, EA[22:3] remains the same
- **1** 16 byte, EA[22:4] remains the same

WAIT Data-valid feedback operation control for Flash memory, PSRAM and CellularRAM.

- **0** Disable data-valid feedback operation control
- **1** Enable data-valid feedback operation control

WST Write Wait State

MTK Confidential Release for Konka

Specifies the parameters to extend adequate setup and hold time for target component in write operation. Such parameter must be chosen carefully to meet the timing specification requirements for common parameter tWC(write cycle time) for asynchronous-write device and tCWT(chip select low to wait valid time) for synchronous-write device. An example is shown in **Figure 35** and **Table 21**.

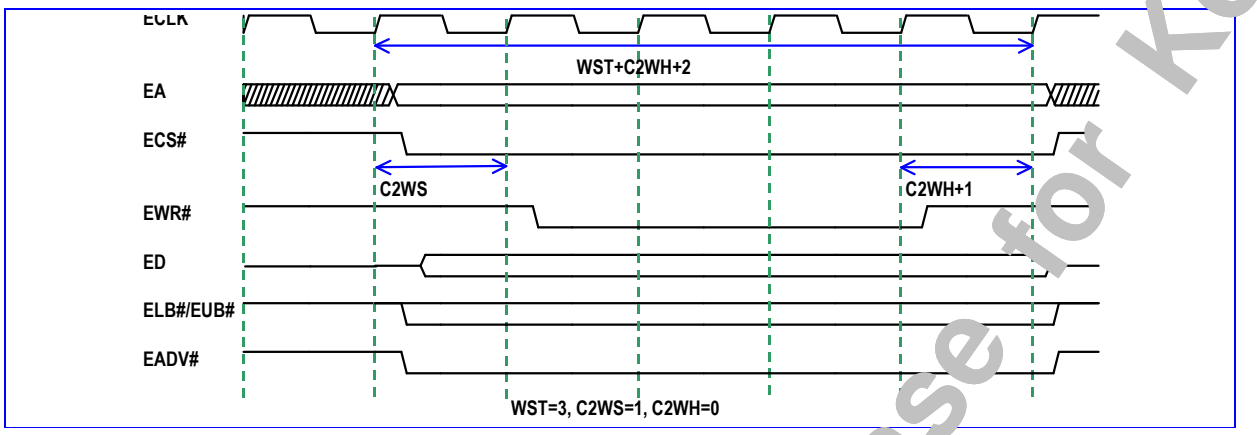

Figure 35 Write Wait State Timing Diagram for Asynchronous-Write Memory (BW=0)

Write Pulse Width (Write Data Setup Time)	Write Wait State in 104 MHz unit
65 ns ~ 70 ns	7
85 ns ~ 90 ns	9
110 ns ~ 120 ns	12

Table 21 Reference value of Write Wait State for Asynchronous-Write Devices

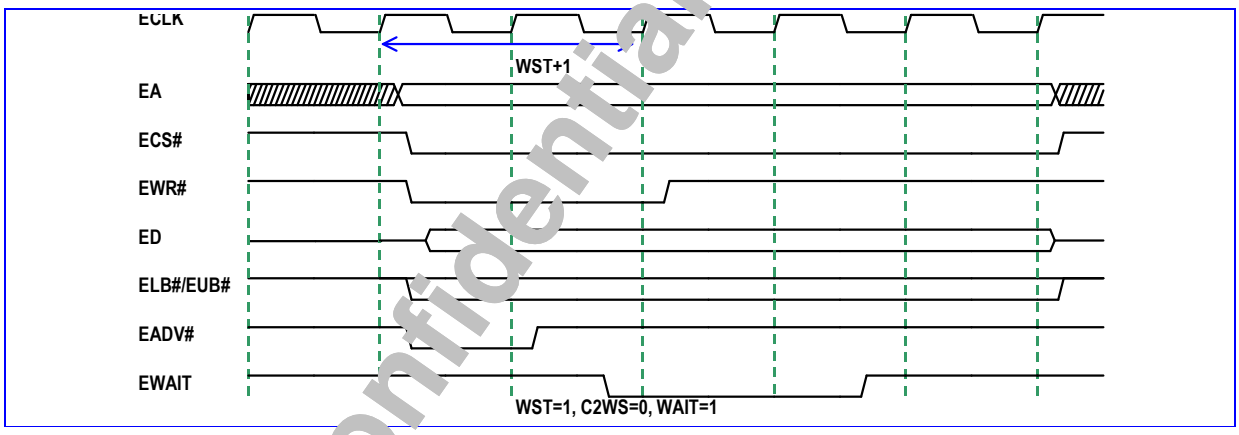

Figure 36 Write Wait State Timing Diagram for Synchronous-Write Memory (CLKEN=1 and BW=1)

ECS# Low to EWAIT Valid	Write Wait State in 104 MHz unit
0 ns ~ 10 ns	1
10 ns ~ 20 ns	2

Table 22 Reference value of Write Wait State for Synchronous-Write Devices

BW Burst Mode Write Control

0 Disable burst write operation

MTK Confidential Release for Konka

1 Enable burst write operation

RBLN Read Byte Lane Enable

DW Data Width

0 16 Bit

1 8 Bit

PMODE Page Mode Control

If the target device supports page mode operations, the Page Mode Control can be enabled. Read in Page Mode is determined by the set of parameters: PRLT and PSIZE.

0 disable page mode operation

1 enable page mode operation

PRLT Read Latency Time within the Same Page

Since page mode operation only helps to eliminate read latency in subsequent access within the same page, the initial latency does not matter. Thus, the memory controller must still adopt the RLT parameter for the initial read or reads between different pages, even if PMODE is set to 1.

CLKEN Clock Enable Control

C2RS Chip Select to Read Strobe Setup Time

C2WH Chip Select to Write Strobe Hold Time

C2WS Chip Select to Write Strobe Setup Time

EMI+0040h EMI Control Register 0 for MobileRAM EMI_CONI

Bit	31	30	29	28	27	26	25	24	23	22	21	20	19	18	17	16
Name							PAUSE_EN	PING PONG _EN	DRAM_MODE		DRAM_SIZE		DRAM _EN		DRAM_CS	
Type							R/W	R/W	R/W		R/W		R/W		R/W	
Reset							0	0	2d		0		0		0	
Bit	15	14	13	12	11	10	9	8	7	6	5	4	3	2	1	0
Name		BA1	BA0	A12	A11	A10	A9	A8	A7	A6	A5	A4	A3	A2	A1	A0
Type		R/W	R/W	R/W	R/W	R/W	R/W	R/W	R/W	R/W	R/W	R/W	R/W	R/W	R/W	R/W
Reset		0	0	0	0	0	0	0	0	0	0	0	0	0	0	0

A12-A0 Mode Register Configuration

BA1-B0 Mode Register Configuration

DRAM_CS MobileRAM Controller Chip Select Signal Control

00 Chip Select 0 is used for MobileRAM

01 Chip Select 1 is used for MobileRAM

10 Chip Select 2 is used for MobileRAM

11 Chip Select 3 is used for MobileRAM

DRAM_EN MobileRAM Controller Control

0 MobileRAM controller is disabled

1 MobileRAM controller is enabled

DRAM_SIZE MobileRAM Chip Size

00 64Mbit

01 128Mbit

10 256Mbit

11 512Mbit

DRAM_MODE MobileRAM Scrambling Table Control

00 Mode 1

01 Mode 2

10 Mode 3 (PASR is not allowed)

MTK Confidential Release for Konka

11 Mode 3 (PASR is not allowed)

PINGPONG_EN Ping-pong Operation Control

PAUSE_EN Self-Refresh Mode Control when Baseband is in Pause Mode Operation

EMI+0048h EMI Control Register 1 for MobileRAM EMI_CONJ

Bit	31	30	29	28	27	26	25	24	23	22	21	20	19	18	17	16
Name							PDNS	SRFS								
Type							R	R								
Reset							0	0								
Bit	15	14	13	12	11	10	9	8	7	6	5	4	3	2	1	0
Name							PDN	SRF						SETM	AREF	PCA
Type							R/W	R/W						R/W	R/W	R/W
Reset							0	0						0	0	0

PCA Pre-Charge All Command

AREF Auto-Refresh Command

SETM Set Mode Register Command

SRF Self-Refresh Mode Command

PDN Power-Down Mode Command

SRFS Self-Refresh Mode Status

PDNS Power Down Mode Status

EMI+0050h EMI Control Register 2 for MobileRAM EMI_CONK

Bit	31	30	29	28	27	26	25	24	23	22	21	20	19	18	17	16
Name	WR		RAS_MAX													
Type	R/W		R/W													
Reset	0		0													
Bit	15	14	13	12	11	10	9	8	7	6	5	4	3	2	1	0
Name	RAS_MIN				RRD		RC				RP		RCD			CAS
Type	R/W				R/W		R/W				R/W		R/W			R/W
Reset	0				0		0				0		0			0

CAS CAS Latency Control

0 CAS Latency = 2

1 CAS Latency = 3

RCD Active to Read or Write Delay

RP Pre-charge Command Period

RC Active Bank A to Active Bank A Period

RRD Active Bank A to Active Bank B Delay

RAS_MIN Minimum Active to Pre-charge Command Delay

RAS_MAX Maximum Active to Pre-charge Command Delay

WR Write Recovery Time

EMI+0058h EMI Control Register 3 for MobileRAM EMI_CONL

Bit	31	30	29	28	27	26	25	24	23	22	21	20	19	18	17	16
Name	ARFEN	HYE								REFCNT					DIV	
Type	R/W	R/W								R/W					R/W	
Reset	0	0								0					0	
Bit	15	14	13	12	11	10	9	8	7	6	5	4	3	2	1	0
Name	ISR				MRD				XSR				RFC			
Type	R/W				R/W				R/W				R/W			
Reset	0				0				0				0			

RFC Auto Refresh Period

MTK Confidential Release for Konka

XSR Exit Self Refresh to Active Command Delay

MRD Load Mode Register Command Period

ISR Minimum Period for Self-Refresh Mode

DIV MobileRAM Refresh Period Pre-Divider in units of 32 KHz; this field defines the MobileRAM Refresh Period.

- **00** Divide by 1 (32KHz)
- **01** Divide by 2 (32KHz/2)
- **10** Divide by 3 (32KHz/3)
- **11** Divide by 4 (32KHz/4)

REFCNT Number of Auto-Refresh-Command to issue per MobileRAM Refresh Period.

HYE Reserved

ARFEN Auto Refresh Control

EMI+0060h EMI Re-map Control Register EMI_REMAP

Bit	15	14	13	12	11	10	9	8	7	6	5	4	3	2	1	0
Name															RM1	RM0
Type															R/W	R/W
Reset															0	0

This register accomplishes the Memory Re-mapping Mechanism. The register provides the kernel software program or system designer with the capability to change memory configuration dynamically. Three kinds of configuration are permitted.

RM[1:0] Re-mapping control for Boot Code, BANK0 and BANK1, refer to **Table 23**.

RM[1:0]	Address 0000_0000h – 07ff_ffffh	Address 0800_0000h – 0fff_ffffh
00	Boot Code	BANK1
01	BANK1	BANK0
10	BANK0	BANK1
11	BANk1	BANK0

Table 23 Memory Map Configuration

EMI+0068h EMI General Control Register 0 EMI_GENA

Bit	31	30	29	28	27	26	25	24	23	22	21	20	19	18	17	16
Name	CKE	EXT_GUARD		DCKSR	DCKE2	DCKE4	DCKE8	DCKE16	DCKE		DCKDLY					
Type	R/W	R/W		R/W	R/W	R/W	R/W	R/W	R/W		R/W					
Reset	0	0		0	0	0	0	0	0		0					
Bit	15	14	13	12	11	10	9	8	7	6	5	4	3	2	1	0
Name	EDA	PDNE	WPOL	SCKSR	SCKE2	SCKE4	SCKE4	SCKE16	SCKE		SCKDLY					
Type	R/W	R/W	R/W	R/W	R/W	R/W	R/W	R/W	R/W		R/W					
Reset	1	0	0	0	0	0	0	0	0		0					

SCKDLY FLASH, SRAM, PSRAM and CellularRAM Clock Delay Control

SCKE FLASH, SRAM, PSRAM and CellularRAM Clock Enable Control

SCKEn FLASH, SRAM, PSRAM and CellularRAM Clock Pad Driving Control (n=2, 4, 8, 16)

SCKSR FLASH, SRAM, PSRAM and CellularRAM Pad Slew-Rate Control

WPOL FLASH, SRAM, PSRAM and CellularRAM Wait Signal Inversion Control

PDNE PSRAM Power Down Control

EDA Data Bus Active Drive Control

MTK Confidential Release for Konka

DCKDLY MobileRAM Clock Delay Control
DCKE MobileRAM Clock Enable Control
DCKEn MobileRAM Clock Pad Driving Control (n=2, 4, 8, 16)
DCKSR MobileRAM Clock Pad Slew-Rate Control
EXT_GUARD Extra IDLE Time for FLASH, SRAM, PSRAM and CellularRAM
CKE Dynamic MobileRAM Clock Enable Control

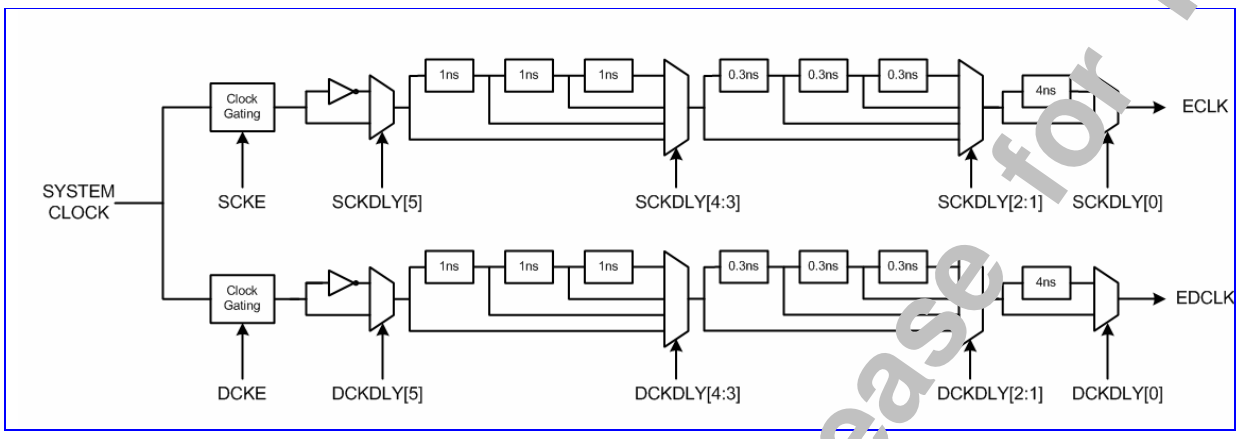

Figure 37 Clock Delay Control

EMI+0070h EMI General Control Register 1 EMI_GENB

Bit	31	30	29	28	27	26	25	24	23	22	21	20	19	18	17	16
Name		EASR	EAE2	EAE4	EAE8	EAE16	EDSR	EDE2	EDE4	EDE8	EDE16	ECSSR	ECSE2	ECSE4	ECSE8	ECSE16
Type		R/W	R/W	R/W	R/W	R/W	R/W	R/W	R/W	R/W	R/W	R/W	R/W	R/W	R/W	R/W
Reset		1	1	0	0	0	1	1	0	0	0	1	1	0	0	0
Bit	15	14	13	12	11	10	9	8	7	6	5	4	3	2	1	0
Name		ERWSR	ERWE2	ERWE4	ERWE8	ERWE16	EADVSR	EADVE2	EADVE4	EADVE8	EADVE16	ERCSR	ERCE2	ERCE4	ERCE8	ERCE16
Type		R/W	R/W	R/W	R/W	R/W	R/W	R/W	R/W	R/W	R/W	R/W	R/W	R/W	R/W	R/W
Reset		1	1	0	0	0	1	1	0	0	0	1	1	0	0	0

ERCEn RAS and CAS Pad Driving Control (n=2, 4, 8, 16)
ERCSR RAS and CAS Pad Slew-Rate Control
EADVEn EADV Pad Driving Control (n=2, 4, 8, 16)
EADVSR EADV Pad Slew-Rate Control
ERWEn ERD, EWR, EUB and ELB Pad Driving Control (n=2, 4, 8, 16)
ERWSR ERD, EWR, EUB and ELB Pad Slew-Rate Control
ECSEn ECS[3:0] Pad Driving Control (n=2, 4, 8, 16)
ECSSR ECS[3:0] Pad Slew-Rate Control
EDEn ED[15:0] Pad Driving Control (n=2, 4, 8, 16)
EDSR ED[15:0] Pad Slew-Rate Control
EAEn EA[25:0] Pad Driving Control (n=2, 4, 8, 16)
EASR EA[25:0] Pad Slew-Rate Control

MTK Confidential Release for Konka

4 Microcontroller Peripherals

Microcontroller (MCU) Peripherals are devices that are under direct control of the Microcontroller. Most of the devices are attached to the Advanced Peripheral Bus (APB) of the MCU subsystem, and serve as APB slaves. Each MCU peripheral must be accessed as a memory-mapped I/O device; that is, the MCU or the DMA bus master reads from or writes to the specific peripheral by issuing memory-addressed transactions.

4.1 Pulse-Width Modulation Outputs

4.1.1 General Description

Two generic pulse-width modulators are implemented to generate pulse sequences with programmable frequency and duty cycle for LCD backlight or charging purpose. The duration of the PWM output signal is LOW as long as the internal counter value is greater than or equal to the threshold value. The waveform is shown in **Figure 38**.

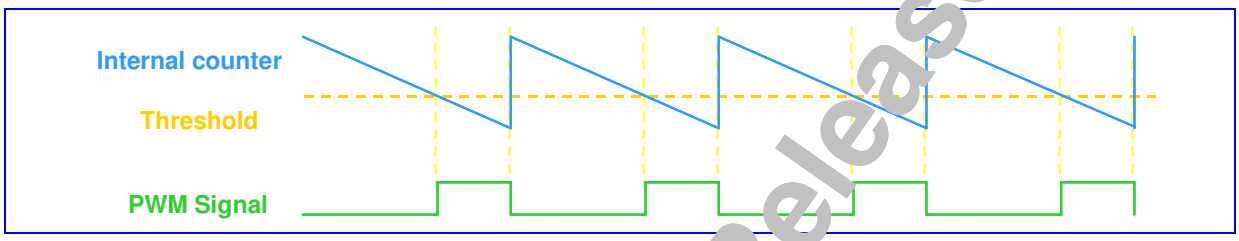

Figure 38 PWM waveform

The frequency and volume of PWM output signal are determined by these registers: PWM_COUNT, PWM_THRES, PWM_CON. The POWERDOWN (pdn_pwm) signal is applied to power-down the PWM module. When PWM is deactivated (POWERDOWN=1), the output is in LOW state.

The output PWM frequency is determined by:

$$\frac{CLK}{CLOCK_DIV \times (PWM_COUNT + 1)} \quad \text{CLK} = 13000000 \text{ when CLKSEL} = 0, CLK = 32000 \, when CLKSEL = 1$$

CLOCK_DIV = 1, when CLK[1:0] = 00b

CLOCK_DIV = 2, when CLK[1:0] = 01b

CLOCK_DIV = 4, when CLK[1:0] = 10b

CLOCK_DIV = 8, when CLK[1:0] = 11b

The output PWM duty cycle is determined by: $\frac{PWM_THRES}{PWM_COUNT + 1}$

Note that PWM_THRES should be less than the PWM_COUNT: if this condition is not satisfied, the output pulse of the PWM is always HIGH.

4.1.2 Register Definitions

PWM+0000h PWM1 Control register **PWM1_CON**

Bit	15	14	13	12	11	10	9	8	7	6	5	4	3	2	1	0
Name														CLKSEL	CLK [1:0]	
Type														R/W	R/W	

MTK Confidential Release for Konka

Reset														0	0

CLK Select PWM1 clock prescaler scale.

00 CLK Hz

01 CLK/2 Hz

10 CLK/4 Hz

11 CLK/8 Hz

Note: When PWM1 module is disabled, its output should be kept in the LOW state.

CLKSEL Select PWM1 clock

0 CLK=13M Hz

1 CLK=32K Hz

PWM+0004h PWM1 max counter value register PWM1_COUNT

Bit	15	14	13	12	11	10	9	8	7	6	5	4	3	2	1	0
Name				PWM1_COUNT [12:0]												
Type				R/W												
Reset				1FFFh												

PWM1_COUNT PWM1 max counter value. This value is the initial value for the internal counter. Regardless of the operation mode, if PWM1_COUNT is written while the internal counter is counting backwards, the new initial value does not take effect until the internal counter counts down to zero, i.e. a complete period.

PWM+0008h PWM1 Threshold Value register PWM1_THRES

Bit	15	14	13	12	11	10	9	8	7	6	5	4	3	2	1	0
Name				PWM1_THRES [12:0]												
Type				R/W												
Reset				0												

PWM1_THRES Threshold value. When the internal counter value is greater than or equal to PWM1_THRES, the PWM1 output signal is 0; when the internal counter is less than PWM1_THRES, the PWM1 output signal is 1.

PWM+000Ch PWM2 Control register PWM2_CON

Bit	15	14	13	12	11	10	9	8	7	6	5	4	3	2	1	0
Name														CLKSEL	CLK [1:0]	
Type														R/W	R/W	
Reset														0	0	

CLK Select PWM2 clock prescaler scale.

00 CLK Hz

01 CLK/2 Hz

10 CLK/4 Hz

11 CLK/8 Hz

Note: When PWM2 module is disabled, its output should be kept in the LOW state.

CLKSEL Select PWM2 clock

0 CLK=13M Hz

1 CLK=32K Hz

PWM+0010h PWM2 max counter value register PWM2_COUNT

Bit	15	14	13	12	11	10	9	8	7	6	5	4	3	2	1	0

MTK Confidential Release for Konka

Name				PWM2_COUNT [12:0]
Type				R/W
Reset				1FFFh

PWM2_COUNT PWM2 max counter value. This value is the initial value for the internal counter. Regardless of the operation mode, if PWM2_COUNT is written while the internal counter is counting backwards, the new initial value does not take effect until the internal counter counts down to zero, i.e. a complete period.

PWM+0014h PWM2 Threshold Value register PWM2_THRES

Bit	15	14	13	12	11	10	9	8	7	6	5	4	3	2	1	0
Name				PWM2_THRES [12:0]												
Type				R/W												
Reset				0												

PWM2_THRES Threshold value. When the internal counter value is greater than or equal to PWM2_THRES, the PWM1 output signal is 0; when the internal counter is less than PWM2_THRES, the PWM2 output signal is 1.

Figure 39 shows the PWM waveform with the indicated register values.

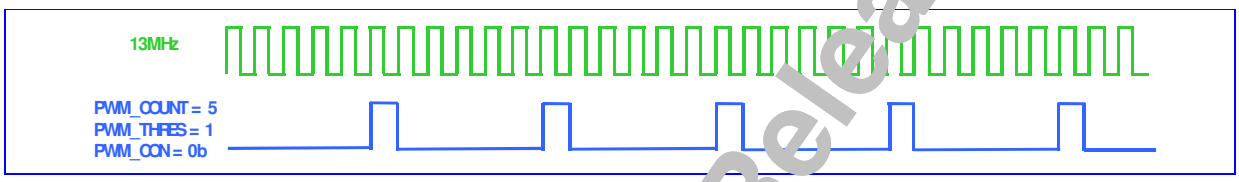

Figure 39 PWM waveform with register values

MTK Confidential Release for Konka

4.2 Alerter

4.2.1 General Description

The output of the Alerter has two sources: one is the enhanced PWM output signal, implemented within the Alerter module; the other is the PDM signal that comes from the DSP domain directly. The output source can be selected via the register ALERTER_CON.

The enhanced PWM has three modes of operation and can generate a signal with programmable frequency and tone volume. The frequency and volume are determined by four registers: ALERTER_CNT1, ALERTER_THRES, ALERTER_CNT2, and ALERTER_CON. ALERTER_CNT1 and ALERTER_CNT2 are the initial counting values for the internal counters counter1 and counter2, respectively.

POWERDOWN signal is applied to power down the Alerter module. When Alerter is deactivated (POWERDOWN=1), the output is in a low state. The waveform of Alerter from the enhanced PWM source in different modes is shown in **Figure 40**.

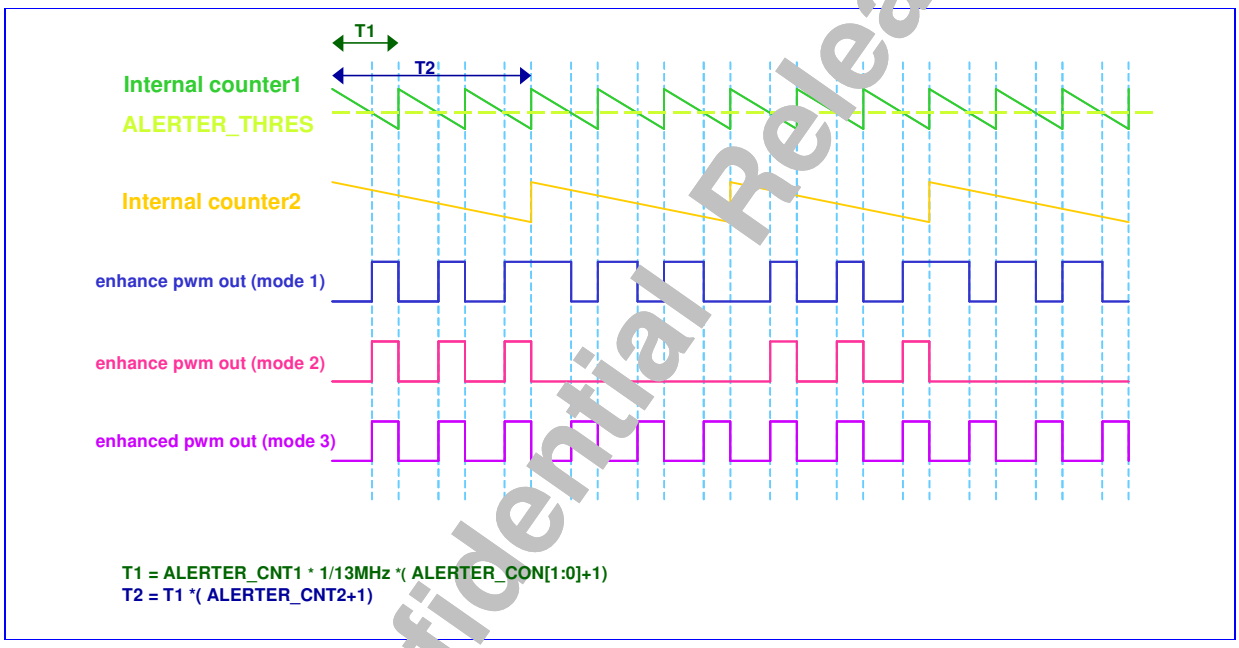

Figure 40 Alerter Waveform

In Mode 1, the polarity of the Alerter output signal, given the relationship between internal counter1 and the programmed threshold, is inverted each time internal counter2 reaches zero.

In Mode 2, each time the internal counter2 reaches zero, the Alerter output signal toggles between the normal PWM signal (i.e. the signal is low for an internal counter1 value greater than or equals to ALERTER_THRES; high when the internal counter1 value is less than ALERTER_THRES) and low state.

In Mode 3, the value of internal counter2 has no effect on output signal. That is, the alerter output signal is low as long as the internal counter 1 value is above the programmed threshold, and is high when the internal counter1 is less than ALERTER_THRES, regardless of internal counter2's value.

The output signal frequency is given by:

MTK Confidential Release for Konka

$$\begin{cases} \dfrac{13000000}{2\times(ALERTER_CON[1:0]+1)\times(ALERTER_CNT1+1)\times(ALERTER_CNT2+1)} & \text{for mode 1 and mode 2} \\ \dfrac{13000000}{(ALERTER_CNT1+1)\times(ALERTER_CON[1:0])} & \text{for mode 3} \end{cases}.$$

The volume of the output signal is given by: $\dfrac{ALERTER_THRES}{ALERTER_CNT1+1}$.

4.2.2 Register Definitions

ALTER+0000h Alerter counter1 value register — ALERTER_CNT1

Bit	15	14	13	12	11	10	9	8	7	6	5	4	3	2	1	0
Name	ALERTER_CNT1 [15:0]															
Type	R/W															
Reset	FFFFh															

ALERTER_CNT1 Alerter max counter's value. Initial value of internal counter1. In any mode, if ALERTER_CNT1 is written when the internal counter1 is counting, the new start value does not take effect until the next countdown period; i.e. after internal counter1 reaches zero.

ALTER+0004h Alerter threshold value register — ALERTER_THRES

Bit	15	14	13	12	11	10	9	8	7	6	5	4	3	2	1	0
Name	ALERTER_THRES [15:0]															
Type	R/W															
Reset	0															

ALERTER_THRES Threshold value. When the internal counter1 value is greater than or equals to ALERTER_THRES, the Alerter output signal is low; when counter1 is less than ALERTER_THRES, the Alerter output signal is high.

ALTER+0008h Alerter counter2 value register — ALERTER_CNT2

Bit	15	14	13	12	11	10	9	8	7	6	5	4	3	2	1	0
Name											ALERTER_CNT2 [5:0]					
Type											R/W					
Reset											111111b					

ALERTER_CNT2 Initial value for internal counter2. The internal counter2 decreases by one each time the internal counter1 counts down to zero; internal counter1 is a nested counter.

ALTER+000Ch Alerter control register — ALERTER_CON

Bit	15	14	13	12	11	10	9	8	7	6	5	4	3	2	1	0
Name								TYPE				MODE			CLK [1:0]	
Type								R/W				R/W			R/W	
Reset								0				0			0	

CLK Select the PWM Waveform clock.

- **00** 13 MHz
- **01** 13/2 MHz
- **10** 13/4 MHz
- **11** 13/8 MHz

MODE Select the Alerter mode.

- **00** Mode 1 selected

MTK Confidential Release for Konka

01 Mode 2 selected

10 Mode 3 selected

TYPE Select the ALERTER output source from PWM or PDM.

0 Output generated from PWM path.

1 Output generated from PDM path.

Note: When the Alerter module is powered down, its output must be kept in low state.

Figure 41 shows the Alerter waveform with the register values.

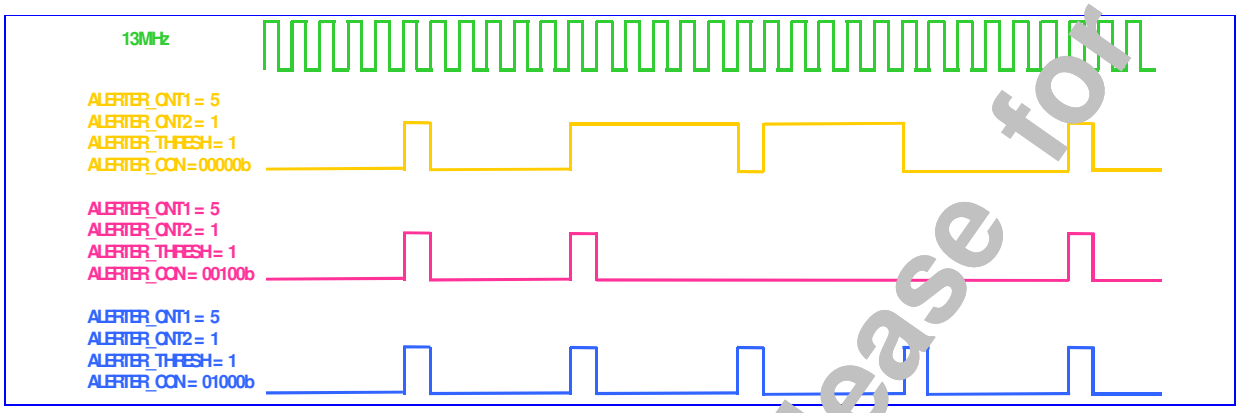

Figure 41 Alerter Output Signal from Enhanced PWM with Register Value Present

4.3 SIM Interface

The MT6228 contains a dedicated smart card interface to allow the MCU access to the SIM card. It can operate via 5 terminals, using SIMVCC, SIMSEL, SIMRST, SIMCLK and SIMDATA.

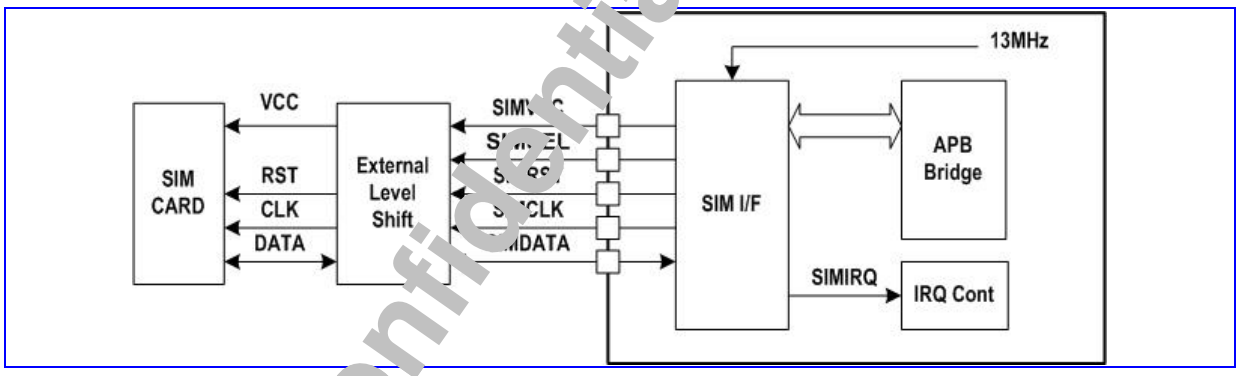

Figure 42 SIM Interface Block Diagram

The SIMVCC is used to control the external voltage supply to the SIM card and SIMSEL determines the regulated smart card supply voltage. SIMRST is used as the SIM card reset signal. SIMDATA and SIMCLK are used for data exchange purpose.

The SIM interface acts as a half duplex asynchronous communication port and its data format is composed of ten consecutive bits: a start bit in state Low, eight information bits, and a tenth bit used for parity checking. The data format can be divided into two modes as follows:

Direct Mode (ODD=SDIR=SINV=0)

MTK Confidential Release for Konka

SB D0 D1 D2 D3 D4 D5 D6 D7 PB

SB: Start Bit (in state Low)

Dx: Data Byte (LSB is first and logic level ONE is High)

PB: Even Parity Check Bit

Indirect Mode (ODD=SDIR=SINV=1)

SB N7 N6 N5 N4 N3 N2 N1 N0 PB

SB: Start Bit (in state Low)

Nx: Data Byte (MSB is first and logic level ONE is Low)

PB: Odd Parity Check Bit

If the receiver gets a wrong parity bit, it will respond by pulling the SIMDATA Low to inform the transmitter and the transmitter will retransmit the character.

When the receiver is a SIM Card, the error response starts 0.5 bits after the PB and it may last for 1~2 bit periods.

When the receiver is the SIM interface, the error response starts 0.5 bits after the PB and lasts for 1.5 bit period.

When the SIM interface is the transmitter, it will take a total of 14 bits guard period for the error response to appear. If the receiver shows the error response, the SIM interface will retransmit the previous character again, otherwise it will transmit the next character.

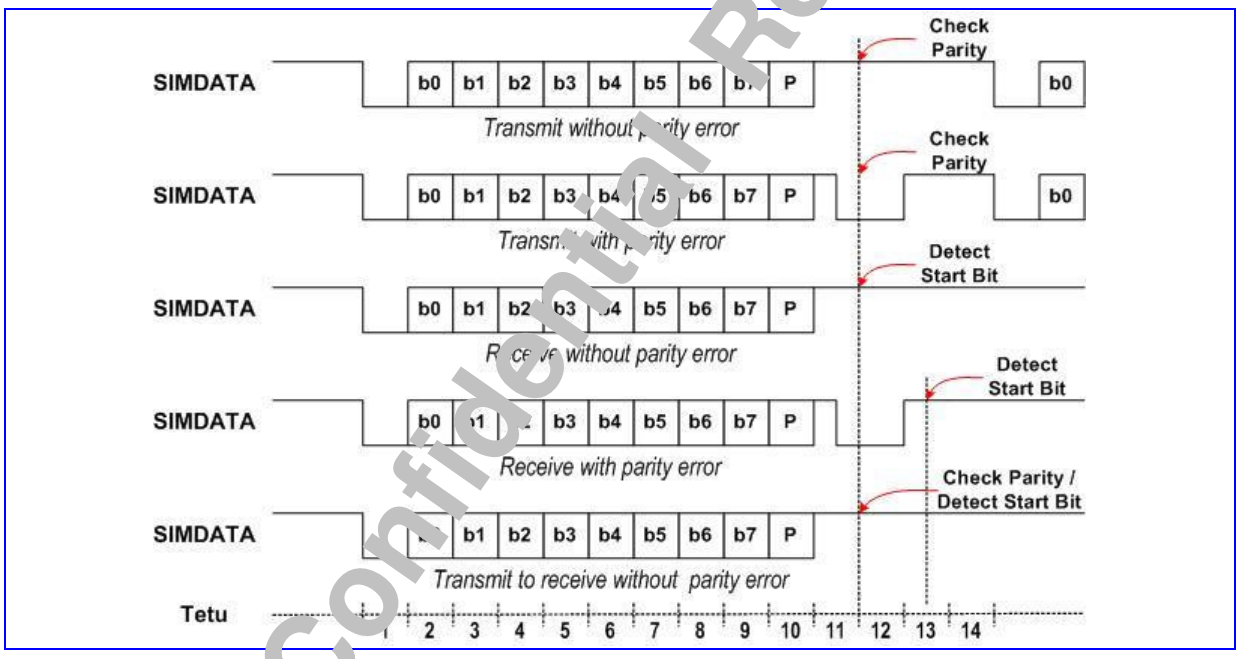

Figure 43 SIM Interface Timing Diagram

4.3.1 Register Definitions

SIM+0000h SIM module control register SIM_CON

Bit	15	14	13	12	11	10	9	8	7	6	5	4	3	2	1	0
Name														WRST	CSTOP	SIMON

MTK Confidential Release for Konka

Type														W	R/W	R/W
Reset														0	0	0

SIMON SIM card power-up/power-down control

- **0** Initiate the card deactivation sequence
- **1** Initiate the card activation sequence

CSTOP Enable clock stop mode. Together with CPOL in SIM_CNF register, it determines the polarity of the SIMCLK in this mode.

- **0** Enable the SIMCLK output.
- **1** Disable the SIMCLK output

WRST SIM card warm reset control

SIM+0004h SIM module configuration register SIM_CNF

Bit	15	14	13	12	11	10	9	8	7	6	5	4	3	2	1	0
Name						HFEN	T0EN	T1EN	TOUT	SIMSEL	ODD	SDIR	SINV	CPOL	TXACK	RXACK
Type						R/W	R/W	R/W	R/W	R/W	R/W	R/W	R/W	R/W	R/W	R/W
Reset						0	0	0	0	0	0	0	0	0	0	0

RXACK SIM card reception error handshake control

- **0** Disable character receipt handshaking
- **1** Enable character receipt handshaking

TXACK SIM card transmission error handshake control

- **0** Disable character transmission handshaking
- **1** Enable character transmission handshaking

CPOL SIMCLK polarity control in clock stop mode

- **0** Make SIMCLK stop in LOW level
- **1** Make SIMCLK stop in HIGH level

SINV Data Inverter.

- **0** Not invert the transmitted and received data
- **1** Invert the transmitted and received data

SDIR Data Transfer Direction

- **0** LSB is transmitted and received first
- **1** MSB is transmitted and received first

ODD Select odd or even parity

- **0** Even parity
- **1** Odd parity

SIMSEL SIM card supply voltage select

- **0** SIMSEL pin is set to LOW level
- **1** SIMSEL pin is set to HIGH level

TOUT SIM work waiting time counter control

- **0** Disable Time-Out counter
- **1** Enable Time-Out counter

T1EN T=1 protocol controller control

- **0** Disable T=1 protocol controller
- **1** Enable T=1 protocol controller

T0EN T=0 protocol controller control

- **0** Disable T=0 protocol controller
- **1** Enable T=0 protocol controller

HFEN Hardware flow control

MTK Confidential Release for Konka

0 Disable hardware flow control

1 Enable hardware flow control

SIM +0008h SIM Baud Rate Register SIM_BRR

Bit	15	14	13	12	11	10	9	8	7	6	5	4	3	2	1	0
Name						BAUD[8:0]									SIMCLK[1:0]	
Type						R/W									R/W	
Reset						372d									01	

SIMCLK Set SIMCLK frequency

00 13/2 MHz

01 13/4 MHz

10 13/8 MHz

11 13/12 MHz

BAUD Determines the baud rate as a division of SIMCLK (SIMCLK/BAUD[8:0])

SIM +0010h SIM interrupt enable register SIM_IRQEN

Bit	15	14	13	12	11	10	9	8	7	6	5	4	3	2	1	0
Name						EDCERR	T1END	RXERR	T0END	SIMOFF	ATRERR	TXERR	TOUT	OVRUN	RXTIDE	TXTIDE
Type						R/W	R/W	R/W	R/W	R/W	R/W	R/W	R/W	R/W	R/W	R/W
Reset						0	0	0	0	0	0	0	0	0	0	0

For all these bits

0 Interrupt is disabled

1 Interrupt is enabled

SIM +0014h SIM module status register SIM_STA

Bit	15	14	13	12	11	10	9	8	7	6	5	4	3	2	1	0
Name						EDCERR	T1END	RXERR	T0END	SIMOFF	ATRERR	TXERR	TOUT	OVRUN	RXTIDE	TXTIDE
Type						RC	RC	RC	RC	RC	RC	RC	RC	RC	RO	RO
Reset						—	—	—	—	—	—	—	—	—	—	—

TXTIDE Transmit FIFO tide mark reached interrupt occurred

RXTIDE Receive FIFO tide mark reached interrupt occurred

OVRUN Transmit/Receive FIFO overrun interrupt occurred

TOUT Between character timeout interrupt occurred

TXERR Character transmission error interrupt occurred

ATRERR ATR start time-out interrupt occurred

SIMOFF Card deactivation complete interrupt occurred

T0END Data Transfer handled by T=0 Controller completed interrupt occurred

RXERR Character reception error interrupt occurred

T1END Data Transfer handled by T=1 Controller completed interrupt occurred

EDCERR T=1 Controller CRC error occurred

SIM +0020h SIM retry limit register SIM_RETRY

Bit	15	14	13	12	11	10	9	8	7	6	5	4	3	2	1	0
Name						TXRETRY								RXRETRY		
Type						R/W								R/W		
Reset						3h								3h		

RXRETRY Specify the max. numbers of receive retries that are allowed when parity error has occurred.

TXRETRY Specify the max. numbers of transmit retries that are allowed when parity error has occurred.

MTK Confidential Release for Konka

SIM +0024h SIM FIFO tide mark register SIM_TIDE

Bit	15	14	13	12	11	10	9	8	7	6	5	4	3	2	1	0
Name					TXTIDE[3:0]								RXTIDE[3:0]			
Type					R/W								R/W			
Reset					0h								0h			

RXTIDE Trigger point for RXTIDE interrupt

TXTIDE Trigger point for TXTIDE interrupt

SIM +0030h Data register used as Tx/Rx Data Register SIM_DATA

Bit	15	14	13	12	11	10	9	8	7	6	5	4	3	2	1	0
Name									DATA[7:0]							
Type									R/W							
Reset									—							

DATA Eight data digits. These correspond to the character being read or written

SIM +0034h SIM FIFO count register SIM_COUNT

Bit	15	14	13	12	11	10	9	8	7	6	5	4	3	2	1	0
Name													COUNT[4:0]			
Type													R/W			
Reset													0h			

COUNT The number of characters in the SIM FIFO when read, and flushes when written.

SIM +0040h SIM activation time register SIM_ATIME

Bit	15	14	13	12	11	10	9	8	7	6	5	4	3	2	1	0
Name	ATIME[15:0]															
Type	R/W															
Reset	AFC7h															

ATIME The register defines the duration, in SIM clock cycles, of the time taken for each of the three stages of the card activation process

SIM +0044h SIM deactivation time register SIM_DTIME

Bit	15	14	13	12	11	10	9	8	7	6	5	4	3	2	1	0
Name					DTIME[11:0]											
Type					R/W											
Reset					3E7h											

DTIME The register defines the duration, in 13MHz clock cycles, of the time taken for each of the three stages of the card deactivation sequence

SIM +0048h Character to character waiting time register SIM_WTIME

Bit	15	14	13	12	11	10	9	8	7	6	5	4	3	2	1	0
Name	WTIME[15:0]															
Type	R/W															
Reset	983h															

WTIME Maximum interval between the leading edge of two consecutive characters in 4 ETU unit

SIM +004Ch Block to block guard time register SIM_GTIME

Bit	15	14	13	12	11	10	9	8	7	6	5	4	3	2	1	0
Name													GTIME			
Type													R/W			
Reset													10d			

MTK Confidential Release for Konka

GTIME Minimum interval between the leading edge of two consecutive characters sent in opposite directions in ETU unit

SIM +0050h Transmit error detection register SIM_ETIME

Bit	15	14	13	12	11	10	9	8	7	6	5	4	3	2	1	0
Name											ETIME					
Type											R/W					
Reset											15d					

ETIME The register define the position for transmit error detection in ETU/16 unit

SIM +0060h SIM command header register: INS SIM_INS

Bit	15	14	13	12	11	10	9	8	7	6	5	4	3	2	1	0
Name								INSD	SIMINS[7:0]							
Type								R/W	R/W							
Reset								0h	0h							

SIMINS This field should be identical to the INS instruction code. When writing to this register, the T=0 controller will be activated and data transfer will be initiated.

INSD [Description for this register field]

- **0** T=0 controller receives data from the SIM card
- **1** T=0 controller sends data to the SIM card

SIM +0064h SIM command header register: P3 SIM_P3(ICC_LEN)

Bit	15	14	13	12	11	10	9	8	7	6	5	4	3	2	1	0
Name								SIMP3[8:0]								
Type								R/W								
Reset								0h								

SIMP3 This field should be identical to the P3 instruction code. It should be written prior to the SIM_INS register. While the data transfer is going on, this field shows the no. of the remaining data to be sent or to be received

SIM +0068h SIM procedure byte register: SW1 SIM_SW1(ICC_LEN)

Bit	15	14	13	12	11	10	9	8	7	6	5	4	3	2	1	0
Name									SIMSW1[7:0]							
Type									RO							
Reset									0h							

SIMSW1 This field holds the last received procedure byte for debug purpose. When the T0END interrupt occurred, it keeps the SW1 procedure byte.

SIM +006Ch SIM procedure byte register: SW2 SIM_SW2(ICC_EDC)

Bit	15	14	13	12	11	10	9	8	7	6	5	4	3	2	1	0
Name									SIMSW2[7:0]							
Type									RO							
Reset									0h							

SIMSW2 This field holds the SW2 procedure byte

MTK Confidential Release for Konka

4.3.2 SIM Card Insertion and Removal

The detection of physical connection to the SIM card and card removal is done by the external interrupt controller or by GPIO.

4.3.3 Card Activation and Deactivation

The card activation and deactivation sequence are both controlled by hardware. The MCU initiates the activation sequence by writing a "1" to bit 0 of the SIM_CON register, and then the interface performs the following activation sequence:

- Assert SIMRST LOW
- Set SIMVCC at HIGH level and SIMDATA in reception mode
- Enable SIMCLK clock
- De-assert SIMRST HIGH (required if it belongs to active low reset SIM card)

The final step in a typical card session is contact deactivation in order to prevent the card from being electrically damaged. The deactivation sequence is initiated by writing a "0" to bit 0 of the SIM_CON register, and then the interface performs the following deactivation sequence:

- Assert SIMRST LOW
- Set SCIMCLK at LOW level
- Set SIMDATA at LOW level
- Set SIMVCC at LOW level

4.3.4 Answer to Reset Sequence

After card activation, a reset operation results in an answer from the card consisting of the initial character TS, followed by at most 32 characters. The initial character TS provides a bit synchronization sequence and defines the conventions to interpret data bytes in all subsequent characters.

On reception of the first character, TS, MCU should read this character, establish the respective required convention and reprogram the related registers. These processes should be completed prior to the completion of reception of the next character. And then, the remainder of the ATR sequence is received, read via the SIM_DATA in the selected convention and interpreted by the software.

The timing requirement and procedures for ATR sequence are handled by hardware and shall meet the requirement of ISO 7816-3 as shown in **Figure 44**.

MTK Confidential Release for Konka

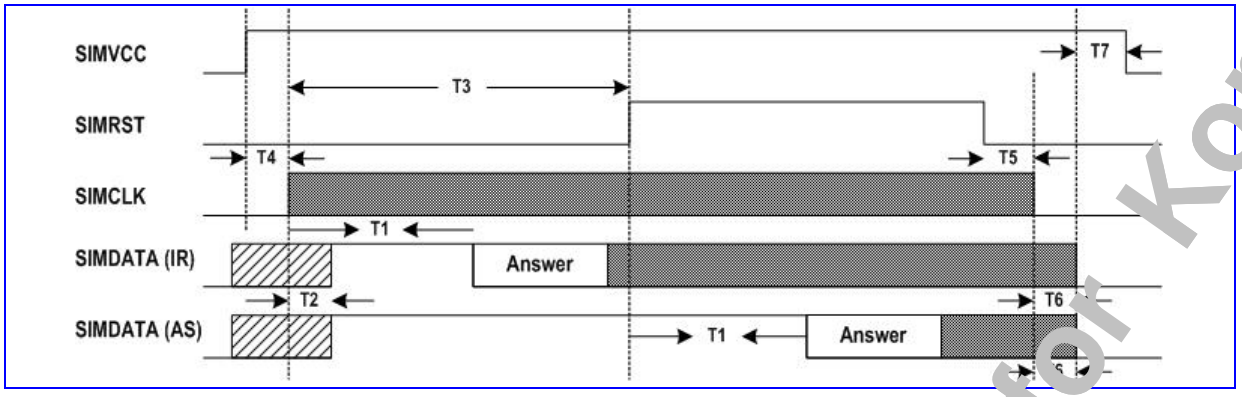

Figure 44 Answer to Reset Sequence

Time	Value	Comment
T1	> 400 SIMCLK	SIMCLK start to ATR appear
T2	< 200 SIMCLK	SIMCLK start to SIMDATA in reception mode
T3	> 40000 SIMCLK	SIMCLK start to SIMRST High
T4	—	SIMVCC High to SIMCLK start
T5	—	SIMRST Low to SIMCLK stop
T6	—	SIMCLK stop to SIMDATA Low
T7	—	SIMDATA Low to SIMVCC Low

Table 24 Answer to Reset Sequence Time-Out Condition

4.3.5 SIM Data Transfer

Two transfer modes are provided, either in software controlled byte-by-byte fashion or in a block fashion using T=0 controller and DMA controller. In both modes, the time-out counter can be enabled to monitor the elapsed time between two consecutive bytes.

4.3.5.1 Byte Transfer Mode

This mode is used during ATR and PPS procedure. In this mode, the SIM interface only ensures error free character transmission and reception.

Receiving Character

Upon detection of the start-bit sent by SIM card, the interface transforms into reception mode and the following bits are shifted into an internal register. If no parity error is detected or character-receive handshaking is disabled, the received-character is written into the SIM FIFO and the SIM_CNT register is increased by one. Otherwise, the SIMDATA line is held low for 0.5 ETU after detecting the parity error for 1.5 ETU, and the character is re-received. If a character fails to be received correctly for the RXRETRY times, the receive-handshaking is aborted and the last-received character is written into the SIM FIFO, the SIM_CNT is increased by one and the RXERR interrupt is generated

When the number of characters held in the receive FIFO exceeds the level defined in the SIM_TIDE register, a RXTIDE interrupt is generated. The number of characters held in the SIM FIFO can be determined by reading the SIM_CNT register and writing to this register will flush the SIM FIFO.

Sending Character

MTK Confidential Release for Konka

Characters that are to be sent to the card are first written into the SIM FIFO and then automatically transmitted to the card at timed intervals. If character-transmit handshaking is enabled, the SIMDATA line is sampled at 1 ETU after the parity bit. If the card indicates that it did not receive the character correctly, the character is retransmitted a maximum of TXRETRY times before a TXERR interrupt is generated and the transmission is aborted. Otherwise, the succeeding byte in the SIM FIFO is transmitted.

If a character fails to be transmitted and a TXERR interrupt is generated, the interface needs to be reset by flushing the SIM FIFO before any subsequent transmit or receive operation.

When the number of characters held in the SIM FIFO falls below the level defined in the SIM_TIDE register, a TXTIDE interrupt is generated. The number of characters held in the SIM FIFO can be determined by reading the SIM_CNT register and writing to this register will flush the SIM FIFO.

4.3.5.2 Block Transfer Mode

Basically, the SIM interface is designed to work in conjunction with the T=0 protocol controller and the DMA controller during non-ATR and non-PPS phase; although it is still possible for software to service the data transfer manually as in byte transfer mode if necessary, and thus the T=0 protocol should be controlled by software.

The T=0 controller is accessed via four registers representing the instruction header bytes INS and P3, and the procedure bytes SW1 and SW2. These registers are:

SIM_INS, SIM_P3

SIM_SW1, SIM_SW2

During characters transfer, SIM_P3 holds the number of characters to be sent or to be received and SIM_SW1 holds the last received procedure byte including NULL, ACK, NACK and SW1 for debug purpose.

Data Receive Instruction

Data Receive Instructions receive data from the SIM card. It is instantiated as the following procedure.

```
1. Enable the T=0 protocol controller by setting the T0EN bit to 1 in SIM_CNF register
2. Program the SIM_TIDE register to 0x0000 (TXTIDE = 0, RXTIDE = 0)
3. Program the SIM_IRQEN to 0x019C (Enable RXERR, TXERR, T0END, TOUT and OVRUN interrupts)
4. Write CLA, INS, P1, P2 and P3 into SIM FIFO
5. Program the DMA controller :
   DMAn_MSBSRC and DMAn_LSBSRC : address of SIM_DATA register
   DMAn_MSBDST and DMAn_LSBDST : memory address reserved to store the received characters
   DMAn_COUNT : identical to P3 or 256 (if P3 == 0)
   DMAn_CON : 0x0078
6. Write P3 into SIM_P3 register and then INS into SIM_INS register (Data Transfer is initiated
   now)
7. Enable the Time-out counter by setting the TOUT bit to 1 in SIM_CNF register
8. Start the DMA controller by writing 0x8000 into the DMAn_START register to
```

Upon completion of the Data Receive Instruction, T0END interrupt will be generated and then the Time-out counter should be disabled by setting the TOUT bit back to 0 in SIM_CNF register.

If error occurs during data transfer (RXERR, TXERR, OVRUN or TOUT interrupt is generated), the SIM card should be deactivated first and then activated prior subsequent operations.

Data Send Instruction

Data Send Instructions send data to the SIM card. It is instantiated as the following procedure.

```
1. Enable the T=0 protocol controller by setting the T0EN bit to 1 in SIM_CNF register
```

MTK Confidential Release for Konka

```
2. Program the SIM_TIDE register to 0x0100 (TXTIDE = 1, RXTIDE = 0)
3. Program the SIM_IRQEN to 0x019C (Enable RXERR, TXERR, T0END, TOUT and OVRUN interrupts)
4. Write CLA, INS, P1, P2 and P3 into SIM FIFO
5. Program the DMA controller :
   DMAn_MSBSRC and DMAn_LSBSRC : memory address reserved to store the transmitted characters
   DMAn_MSBDST and DMAn_LSBDST : address of SIM_DATA register
   DMAn_COUNT : identical to P3
   DMAn_CON : 0x0074
6. Write P3 into SIM_P3 register and then (0x0100 | INS) into SIM_INS register (Data Transfer
   is initiated now)
7. Enable the Time-out counter by setting the TOUT bit to 1 in SIM_CNF register
8. Start the DMA controller by writing 0x8000 into the DMAn_START register
```

Upon completion of the Data Send Instruction, T0END interrupt will be generated and then the Time-out counter should be disabled by setting the TOUT bit back to 0 in SIM_CNF register.

If error occurs during data transfer (RXERR, TXERR, OVRUN or TOUT interrupt is generated), the SIM card should be deactivated first and then activated prior to subsequent operations.

4.4 Keypad Scanner

4.4.1 General Description

The keypad can be divided into two parts: one is the keypad interface including 7 columns and 6 rows; the other is the key detection block which provides key pressed, key released and de-bounce mechanisms. Each time the key is pressed or released, i.e. something different in the 7 x 6 matrix, the key detection block senses the change and recognizes if a key has been pressed or released. Whenever the key status changes and is stable, a KEYPAD IRQ is issued. The MCU can then read the key(s) pressed directly in KP_HI_KEY, KP_MID_KEY and KP_LOW_KEY registers. To ensure that the key pressed information is not missed, the status register in keypad is not read-cleared by APB read command. The status register can only be changed by the key-pressed detection FSM.

This keypad can detect one or two key-pressed simultaneously with any combination. **Figure 45** shows one key pressed condition. **Figure 46**(a) and **Figure 46**(b) illustrate two keys pressed cases. Since the key press detection depends on the HIGH or LOW level of the external keypad interface, if keys are pressed at the same time and there exists a key that is on the same column and the same row with the other keys, the pressed key cannot be correctly decoded. For example, if there are three key presses: key1 = (x1, y1), key2 = (x2, y2), and key3 = (x1, y2), then both key3 and key4 = (x2, y1) are detected, and therefore they cannot be distinguished correctly. Hence, the keypad can detect only one or two keys pressed simultaneously at any combination. More than two keys pressed simultaneously in a specific pattern retrieves the wrong information. If these specific patterns are excluded, the keypad-scanning block can detect 11 keys at the same time, shown in **Figure 47**.

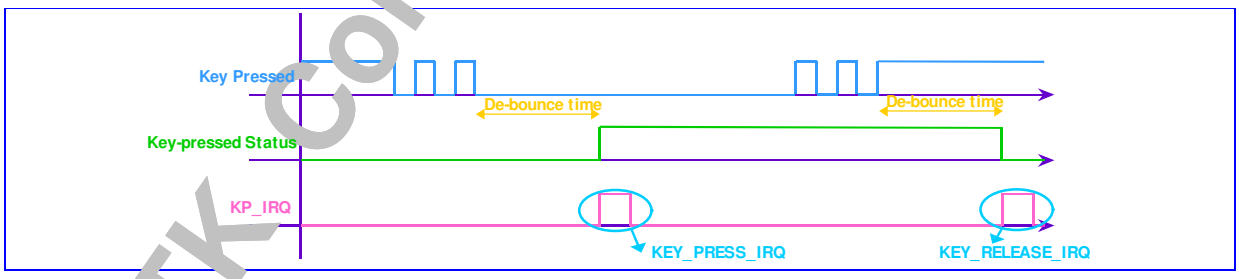

Figure 45 One key pressed with de-bounce mechanism denoted

MTK Confidential Release for Konka

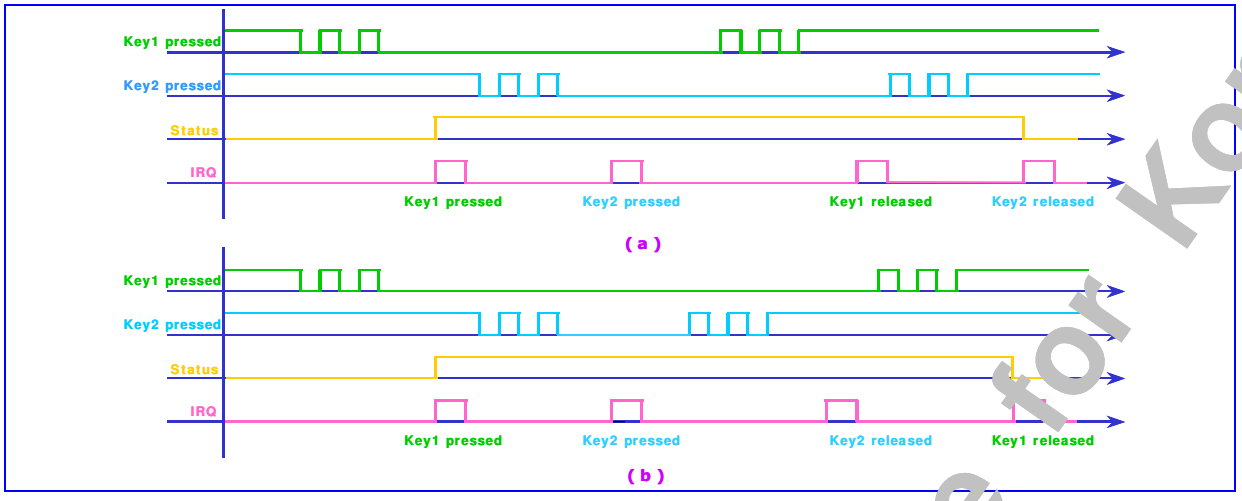

Figure 46 (a) Two keys pressed, case 1 **(b)** Two keys pressed, case 2

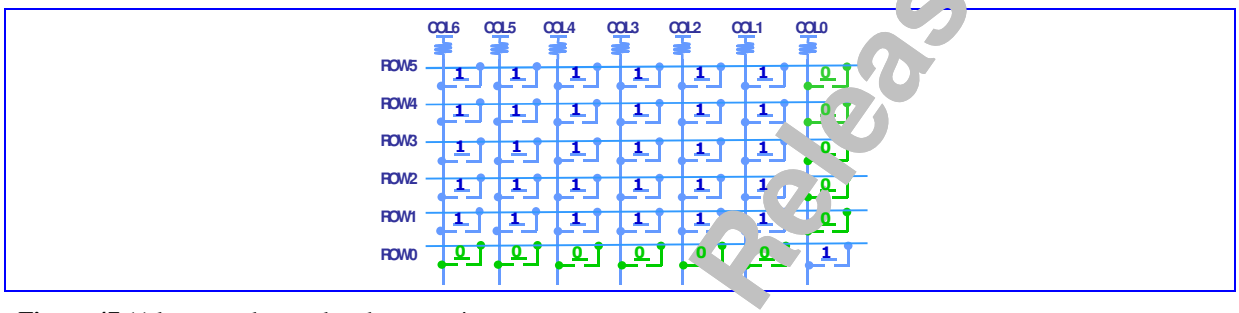

Figure 47 11 keys are detected at the same time

4.4.2 Register Definitions

KP +0000h Keypad status KP_STA

Bit	15	14	13	12	11	10	9	8	7	6	5	4	3	2	1	0
Name																STA
Type																RO
Reset																0

STA This register indicates the keypad status. The register is not cleared by the read operation.

- **0** No key pressed
- **1** Key pressed

KP +0004h Keypad scanning output, the lower 16 keys KP_LOW_KEY

Bit	15	14	13	12	11	10	9	8	7	6	5	4	3	2	1	0
Name	KEYS [15:0]															
Type	RO															
Reset	FFFFh															

KP +0008h Keypad scanning output, the medium 16 keys KP_MID_KEY

Bit	15	14	13	12	11	10	9	8	7	6	5	4	3	2	1	0
Name	KEYS [31:16]															
Type	RO															
Reset	FFFFh															

MTK Confidential Release for Konka

KP+000Ch Keypad scanning output, the higher 4 keys KP_HIGH_KEY

Bit	15	14	13	12	11	10	9	8	7	6	5	4	3	2	1	0
Name							KEYS[41:32]									
Type							RO									
Reset							3FF'h									

These two registers list the status of 42 keys on the keypad. When the MCU receives the KEYPAD IRQ, both two registers must be read. If any key is pressed, the relative bit is set to 0.

KEYS Status list of the 42 keys.

KP +00010h De-bounce period setting KP_DEBOUNCE

Bit	15	14	13	12	11	10	9	8	7	6	5	4	3	2	1	0
Name			DEBOUNCE [13:0]													
Type			R/W													
Reset			400h													

This register defines the waiting period before key press or release events are considered stale.

DEBOUNCE De-bounce time = KP_DEBOUNCE/32 ms.

4.5 General Purpose Inputs/Outputs

MT6228 offers 71 general-purpose I/O pins and 3 general-purpose output pins. By setting the control registers, MCU software can control the direction, the output value, and read the input values on these pins. These GPIOs and GPOs are multiplexed with other functionalities to reduce the pin count.

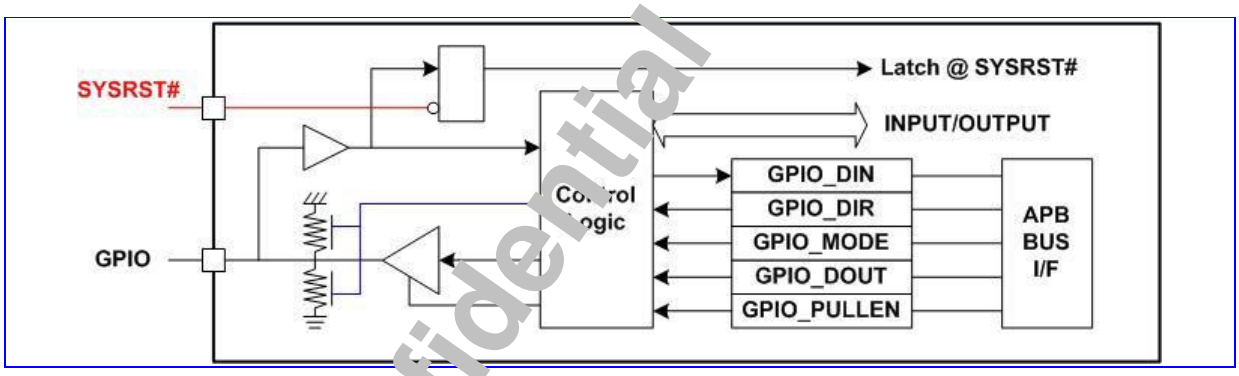

Figure 48 GPIO Block Diagram

GPIOs at RESET

Upon a hardware reset (SYSRST#), GPIOs are all configured as inputs and the following alternate usages of the GPIO pins are enabled.

These GPIOs are used to latch the inputs upon reset to memorize the desired configuration to ensure that the system restarts or boots up in the right mode.

Multiplexing of Signals on GPIO

The GPIO pins can be multiplexed with other signals.

- DAICLK, DAIPCMIN, DAIPCMOUT, DAIRST: digital audio interface for FTA
- BPI_BUS6, BPI_BUS7, BPI_BUS8, BPI_BUS9: radio hardwired control

MTK Confidential Release for Konka

- BSI_CS1: additional chip select signal for radio 3-wire interface
- LSCK, LSA0, LSDA, LSCE0#, LSCE1#: serial display interface
- LPCE1#: parallel display interface chip select signal
- NRNB, NCLE, NALE, NWEB, NREB, NCEB: NAND flash control signals
- PWM1, PWM2: pulse width modulation signal
- ALERTER: pulse width modulation signal for buzzer
- IRDA_RXD, IRDA_TXD, IRDA_PDN: IrDA control signals
- URXD2, UTXD2, UCTS2, URTS2: data and flow control signals for UART2
- URXD3, UTXD3, UCTS3, URTS3: data and flow control signals for UART3
- CMRST, CMPDN, CMDAT9, CMDAT8, CMDAT7, CMDAT6, CMDAT5, CMDAT4, CMDAT3, CMDAT2, CMDAT1, CMDAT0: sensor interface
- SRCLKENAI: external power on signal of the external VCXO LDO
- NLD8, NLD9, NLD10, NLD11, NLD12, NLD13, NLD14, NLD15, NLD16, NLD17: NAND FLASH and Parallel LCD data signals
- MFIQ, MIRQ: external interrupt
- MCDA4, MCDA5, MCDA6, MCDA7: MMC4.0 data signals

Multiplexed of Signals on GPO

- SRCLKENA, SRCLKENAN: power on signal of the external VCXO LDO
- EPDN: external memory interface power down controls

4.5.1 Register Definitions

GPIO+0000h GPIO direction control register 1 GPIO_DIR1

Bit	15	14	13	12	11	10	9	8	7	6	5	4	3	2	1	0
Name	GPIO 15	GPIO 14	GPIO 13	GPIO 12	GPIO 11	GPIO 10	GPIO 9	GPIO 8	GPIO 7	GPIO 6	GPIO 5	GPIO 4	GPIO 3	GPIO 2	GPIO 1	GPIO 0
Type	R/W	R/W	R/W	R/W	R/W	R/W	R/W	R/W	R/W	R/W	R/W	R/W	R/W	R/W	R/W	R/W
Reset	0	0	0	0	0	0	0	0	0	0	0	0	0	0	0	0

GPIO +0010h GPIO direction control register 2 GPIO_DIR2

Bit	15	14	13	12	11	10	9	8	7	6	5	4	3	2	1	0
Name	GPIO 31	GPIO 30	GPIO 29	GPIO 28	GPIO 27	GPIO 26	GPIO 25	GPIO 24	GPIO 23	GPIO 22	GPIO 21	PGIO 20	GPIO 19	GPIO 18	GPIO 17	GPIO 16
Type	R/W	R/W	R/W	R/W	R/W	R/W	R/W	R/W	R/W	R/W	R/W	R/W	R/W	R/W	R/W	R/W
Reset	0	0	0	0	0	0	0	0	0	0	0	0	0	0	0	0

GPIO+0020h GPIO direction control register 3 GPIO_DIR3

Bit	15	14	13	12	11	10	9	8	7	6	5	4	3	2	1	0
Name	GPIO 47	GPIO 46	GPIO 45	GPIO 44	GPIO 43	GPIO 42	GPIO 41	GPIO 40	GPIO 39	GPIO 38	GPIO 37	GPIO 36	GPIO 35	GPIO 34	GPIO 33	GPIO 32
Type	R/W	R/W	R/W	R/W	R/W	R/W	R/W	R/W	R/W	R/W	R/W	R/W	R/W	R/W	R/W	R/W
Reset	0	0	0	0	0	0	0	0	0	0	0	0	0	0	0	0

MTK Confidential Release for Konka

GPIO+0030h GPIO direction control register 4 GPIO_DIR4

Bit	15	14	13	12	11	10	9	8	7	6	5	4	3	2	1	0
Name	GPIO 63	GPIO 62	GPIO 61	GPIO 60	GPIO 59	GPIO 58	GPIO 57	GPIO 56	GPIO 55	GPIO 54	GPIO 53	GPIO 52	GPIO 51	GPIO 50	GPIO 49	GPIO 48
Type	R/W	R/W	R/W	R/W	R/W	R/W	R/W	R/W	R/W	R/W	R/W	R/W	R/W	R/W	R/W	R/W
Reset	0	0	0	0	0	0	0	0	0	0	0	0	0	0	0	0

GPIO+0040h GPIO direction control register 5 GPIO_DIR5

Bit	15	14	13	12	11	10	9	8	7	6	5	4	3	2	1	0
Name						GPIO 74	GPIO 73	GPIO 72	GPIO 71	GPIO 70	GPIO 69	GPIO 68				
Type						R/W	R/W	R/W	R/W	R/W	R/W	R/W				
Reset						0	0	0	0	0	0	0				

GPIO*n* GPIO direction control

- **0** GPIOs are configured as input
- **1** GPIOs are configured as output

GPIO +0050h GPIO pull-up/pull-down enable register 1 GPIO_PULLEN 1

Bit	15	14	13	12	11	10	9	8	7	6	5	4	3	2	1	0
Name	GPIO 15	GPIO 14	GPIO 13	GPIO 12	GPIO 11	GPIO 10	GPIO 9	GPIO 8	GPIO 7	GPIO 6	GPIO 5	GPIO 4	GPIO 3	GPIO 2	GPIO 1	GPIO 0
Type	R/W	R/W	R/W	R/W	R/W	R/W	R/W	R/W	R/W	R/W	R/W	R/W	R/W	R/W	R/W	R/W
Reset	1	1	1	1	1	1	1	1	1	1	1	1	1	1	1	1
Note	PD	PD	PD	PD	PD	PD	High-Z	High-Z	High-Z	High-Z	High-Z	HIzhZ	PU	PU	PD	PD

GPIO +0060h GPIO pull-up/pull-down enable register 2 GPIO_PULLEN 2

Bit	15	14	13	12	11	10	9	8	7	6	5	4	3	2	1	0
Name	GPIO 31	GPIO 30	GPIO 29	GPIO 28	GPIO 27	GPIO 26	GPIO 25	GPIO 24	GPIO 23	GPIO 22	GPIO 21	PGIO 20	GPIO 19	GPIO 18	GPIO 17	GPIO 16
Type	R/W	R/W	R/W	R/W	R/W	R/W	R/W	R/W	R/W	R/W	R/W	R/W	R/W	R/W	R/W	R/W
Reset	1	1	1	1	1	1	1	1	1	1	1	1	1	1	1	1
Note	PU	PU	PU	PD	PD	PU	PU	PU	PU	PU	PU	PU	PD	PD	PD	PD

GPIO+0070h GPIO pull-up/pull-down enable register 3 GPIO_PULLEN 3

Bit	15	14	13	12	11	10	9	8	7	6	5	4	3	2	1	0
Name	GPIO 47	GPIO 46	GPIO 45	GPIO 44	GPIO 43	GPIO 42	GPIO 41	GPIO 40	GPIO 39	GPIO 38	GPIO 37	GPIO 36	GPIO 35	GPIO 34	GPIO 33	GPIO 32
Type	R/W	R/W	R/W	R/W	R/W	R/W	R/W	R/W	R/W	R/W	R/W	R/W	R/W	R/W	R/W	R/W
Reset	1	1	1	1	1	1	1	1	1	1	1	1	1	1	1	1
Note	High-Z	High-Z	High-Z	High-Z	PU	PU	PU	PU	PU	PU	PU	PU	PD	PD	PD	PD

GPIO+0080h GPIO pull-up/pull-down enable register 4 GPIO_PULLEN4

Bit	15	14	13	12	11	10	9	8	7	6	5	4	3	2	1	0
Name	GPIO 63	GPIO 62	GPIO 61	GPIO 60	GPIO 59	GPIO 58	GPIO 57	GPIO 56	GPIO 55	GPIO 54	GPIO 53	GPIO 52	GPIO 51	GPIO 50	GPIO 49	GPIO 48
Type	R/W	R/W	R/W	R/W	R/W	R/W	R/W	R/W	R/W	R/W	R/W	R/W	R/W	R/W	R/W	R/W
Reset	1	1	1	1	1	1	1	1	1	1	1	1	1	1	1	1
Note	PU	PD	PD	PD	PD	PD	PD	PD	PD	PD	PU	PU	PU	PD	PU	PD

MTK Confidential Release for Konka

GPIO+0090h GPIO pull-up/pull-down enable register 5 GPIO_PULLEN5

Bit	15	14	13	12	11	10	9	8	7	6	5	4	3	2	1	0
Name						GPIO 74	GPIO 73	GPIO 72	GPIO 71	GPIO 70	GPIO 69	GPIO 68				
Type						R/W	R/W	R/W	R/W	R/W	R/W	R/W				
Reset						1	1	1	1	1	1	1				
Note						PD	PD	PD	PD	PD	PD	PD				

GPIO*n* GPIO pull-up/pull-down control

GPIO +00A0h GPIO data inversion control register 1 GPIO_DINV1

Bit	15	14	13	12	11	10	9	8	7	6	5	4	3	2	1	0
Name	INV15	INV14	INV13	INV12	INV11	INV10	INV9	INV8	INV7	INV6	INV5	INV4	INV3	INV2	INV1	INV0
Type	R/W	R/W	R/W	R/W	R/W	R/W	R/W	R/W	R/W	R/W	R/W	R/W	R/W	R/W	R/W	R/W
Reset	0	0	0	0	0	0	0	0	0	0	0	0	0	0	0	0

GPIO +00B0h GPIO data inversion control register 2 GPIO_DINV2

Bit	15	14	13	12	11	10	9	8	7	6	5	4	3	2	1	0
Name	INV31	INV30	INV29	INV28	INV27	INV26	INV25	INV24	INV23	INV22	INV21	INV20	INV19	IVN18	INV17	INV16
Type	R/W	R/W	R/W	R/W	R/W	R/W	R/W	R/W	R/W	R/W	R/W	R/W	R/W	R/W	R/W	R/W
Reset	0	0	0	0	0	0	0	0	0	0	0	0	0	0	0	0

GPIO +00C0h GPIO data inversion control register 3 GPIO_DINV3

Bit	15	14	13	12	11	10	9	8	7	6	5	4	3	2	1	0
Name	INV47	INV46	INV45	INV44	INV43	INV42	INV41	INV40	INV39	INV38	INV37	INV36	INV35	INV34	INV33	INV32
Type	R/W	R/W	R/W	R/W	R/W	R/W	R/W	R/W	R/W	R/W	R/W	R/W	R/W	R/W	R/W	R/W
Reset	0	0	0	0	0	0	0	0	0	0	0	0	0	0	0	0

GPIO+00D0h GPIO data inversion control register 4 GPIO_DINV4

Bit	15	14	13	12	11	10	9	8	7	6	5	4	3	2	1	0
Name	INV63	INV62	INV61	INV60	INV59	INV58	INV57	INV56	INV55	INV54	INV53	INV52	INV51	INV50	INV49	INV48
Type	R/W	R/W	R/W	R/W	R/W	R/W	R/W	R/W	R/W	R/W	R/W	R/W	R/W	R/W	R/W	R/W
Reset	0	0	0	0	0	0	0	0	0	0	0	0	0	0	0	0

GPIO+00E0h GPIO data inversion control register 5 GPIO_DINV5

Bit	15	14	13	12	11	10	9	8	7	6	5	4	3	2	1	0
Name						INV74	INV73	INV73	INV71	INV70	INV69	INV68				
Type						R/W	R/W	R/W	R/W	R/W	R/W	R/W				
Reset						0	0	0	0	0	0	0				

INVn GPIO inversion control

0 GPIOs data inversion disable

1 GPIOs data inversion enable

GPIO +00F0h GPIO data output register 1 GPIO_DOUT1

Bit	15	14	13	12	11	10	9	8	7	6	5	4	3	2	1	0
Name	GPIO 15	GPIO 14	GPIO 13	GPIO 12	GPIO 11	GPIO 10	GPIO 9	GPIO 8	GPIO 7	GPIO 6	GPIO 5	GPIO 4	GPIO 3	GPIO 2	GPIO 1	GPIO 0
Type	R/W	R/W	R/W	R/W	R/W	R/W	R/W	R/W	R/W	R/W	R/W	R/W	R/W	R/W	R/W	R/W
Reset	0	0	0	0	0	0	0	0	0	0	0	0	0	0	0	0

MTK Confidential Release for Konka

GPIO +0100h GPIO data output register 2 GPIO_DOUT2

Bit	15	14	13	12	11	10	9	8	7	6	5	4	3	2	1	0
Name	GPIO 31	GPIO 30	GPIO 29	GPIO 28	GPIO 27	GPIO 26	GPIO 25	GPIO 24	GPIO 23	GPIO 22	GPIO 21	PGIO 20	GPIO 19	GPIO 18	GPIO 17	GPIO 16
Type	R/W	R/W	R/W	R/W	R/W	R/W	R/W	R/W	R/W	R/W	R/W	R/W	R/W	R/W	R/W	R/W
Reset	0	0	0	0	0	0	0	0	0	0	0	0	0	0	0	0

GPIO +0110h GPIO data output register 3 GPIO_DOUT3

Bit	15	14	13	12	11	10	9	8	7	6	5	4	3	2	1	0
Name	GPIO 47	GPIO 46	GPIO 45	GPIO 44	GPIO 43	GPIO 42	GPIO 41	GPIO 40	GPIO 39	GPIO 38	GPIO 37	GPIO 36	GPIO 35	GPIO 34	GPIO 33	GPIO 32
Type	R/W	R/W	R/W	R/W	R/W	R/W	R/W	R/W	R/W	R/W	R/W	R/W	R/W	R/W	R/W	R/W
Reset	0	0	0	0	0	0	0	0	0	0	0	0	0	0	0	0

GPIO+0120h GPIO data output register 4 GPIO_DOUT4

Bit	15	14	13	12	11	10	9	8	7	6	5	4	3	2	1	0
Name	GPIO 63	GPIO 62	GPIO 61	GPIO 60	GPIO 59	GPIO 58	GPIO 57	GPIO 56	GPIO 55	GPIO 54	GPIO 53	GPIO 52	GPIO 51	GPIO 50	GPIO 49	GPIO 48
Type	R/W	R/W	R/W	R/W	R/W	R/W	R/W	R/W	R/W	R/W	R/W	R/W	R/W	R/W	R/W	R/W
Reset	0	0	0	0	0	0	0	0	0	0	0	0	0	0	0	0

GPIO+0130h GPIO data output register 5 GPIO_DOUT5

Bit	15	14	13	12	11	10	9	8	7	6	5	4	3	2	1	0
Name						GPIO 74	GPIO 73	GPIO 72	GPIO 71	GPIO 70	GPIO 69	GPIO 68				
Type						R/W	R/W	R/W	R/W	R/W	R/W	R/W				
Reset						0	0	0	0	0	0	0				

GPIOn GPIO data output control

- **0** GPIOs data output 0
- **1** GPIOs data output 1

GPIO +0140h GPIO data Input register 1 GPIO_DIN1

Bit	15	14	13	12	11	10	9	8	7	6	5	4	3	2	1	0
Name	GPIO 15	GPIO 14	GPIO 13	GPIO 12	GPIO 11	GPIO 10	GPIO 9	GPIO 8	GPIO 7	GPIO 6	GPIO 5	GPIO 4	GPIO 3	GPIO 2	GPIO 1	GPIO 0
Type	RO	RO	RO	RO	RO	RO	RO	RO	RO	RO	RO	RO	RO	RO	RO	RO
Reset	X	X	X	X	X	X	X	X	X	X	X	X	X	X	X	X

GPIO +0150h GPIO data Input register 2 GPIO_DIN2

Bit	15	14	13	12	11	10	9	8	7	6	5	4	3	2	1	0
Name	GPIO 31	GPIO 30	GPIO 29	GPIO 28	GPIO 27	GPIO 26	GPIO 25	GPIO 24	GPIO 23	GPIO 22	GPIO 21	PGIO 20	GPIO 19	GPIO 18	GPIO 17	GPIO 16
Type	RO	RO	RO	RO	RO	RO	RO	RO	RO	RO	RO	RO	RO	RO	RO	RO
Reset	X	X	X	X	X	X	X	X	X	X	X	X	X	X	X	X

GPIO +0160h GPIO data Input register 3 GPIO_DIN3

Bit	15	14	13	12	11	10	9	8	7	6	5	4	3	2	1	0
Name	GPIO 47	GPIO 46	GPIO 45	GPIO 44	GPIO 43	GPIO 42	GPIO 41	GPIO 40	GPIO 39	GPIO 38	GPIO 37	GPIO 36	GPIO 35	GPIO 34	GPIO 33	GPIO 32
Type	RO	RO	RO	RO	RO	RO	RO	RO	RO	RO	RO	RO	RO	RO	RO	RO
Reset	X	X	X	X	X	X	X	X	X	X	X	X	X	X	X	X

MTK Confidential Release for Konka

GPIO+0170h GPIO data input register 4 GPIO_DIN4

Bit	15	14	13	12	11	10	9	8	7	6	5	4	3	2	1	0
Name	GPIO 63	GPIO 62	GPIO 61	GPIO 60	GPIO 59	GPIO 58	GPIO 57	GPIO 56	GPIO 55	GPIO 54	GPIO 53	GPIO 52	GPIO 51	GPIO 50	GPIO 49	GPIO 48
Type	RO	RO	RO	RO	RO	RO	RO	RO	RO	RO	RO	RO	RO	RO	RO	RO
Reset	X	X	X	X	X	X	X	X	X	X	X	X	X	X	X	X

GPIO+0180h GPIO data input register 5 GPIO_DIN5

Bit	15	14	13	12	11	10	9	8	7	6	5	4	3	2	1	0
Name						GPIO 74	GPIO 73	GPIO 72	GPIO 71	GPIO 70	GPIO 69	GPIO 68				
Type						RO	RO	RO	RO	RO	RO	RO				
Reset						X	X	X	X	X	X	X				

GPIOn GPIOs data input

GPIO +0190h GPO data output register GPO_DOUT

Bit	15	14	13	12	11	10	9	8	7	6	5	4	3	2	1	0
Name														GPO2	GPO1	GPO0
Type														R/W	R/W	R/W
Reset														0	0	0

GPOn GPOs data output

GPIO +01A0h GPIO mode control register 1 GPIO_MODE1

Bit	15	14	13	12	11	10	9	8	7	6	5	4	3	2	1	0
Name	GPIO7_M		GPIO6_M		GPIO5_M		GPIO4_M		GPIO3_M		GPIO2_M		GPIO1_M		GPIO0_M	
Type	R/W		R/W		R/W		R/W		R/W		R/W		R/W		R/W	
Reset	00		00		00		00		00		00		00		00	

GPIO0_M GPIO mode selection
- **00** Configured as GPIO function
- **01** CMOS Sensor Flash Control Output
- **10** Reserved
- **11** DSP Task ID5

GPIO1_M GPIO mode selection
- **00** Configured as GPIO function
- **01** BSI Auxiliary input
- **10** Reserved
- **11** Reserved

GPIO2_M GPIO mode selection
- **00** Configured as GPIO function
- **01** SCCB Clock
- **10** Reserved
- **11** Reserved

GPIO3_M GPIO mode selection
- **00** Configured as GPIO function
- **01** SCCB Data
- **10** Reserved
- **11** Reserved

GPIO4_M GPO mode selection
- **00** Configured as GPIO function

MTK Confidential Release for Konka

01 EDI (I2S) Clock Output
10 UART2 RXD Signal
11 Software Debug Interface Data Bit 7

GPIO5_M GPIO mode selection
00 Configured as GPIO function
01 EDI (I2S) Word Synchronization Output
10 UART2 TXD Signal
11 Software Debug Interface Data Bit 6

GPIO6_M GPIO mode selection
00 Configured as GPIO function
01 EDI (I2S) Data Signal
10 Reserved
11 Software Debug Interface Data Bit 5

GPIO7_M GPIO mode selection
00 Configured as GPIO function
01 Reserved
10 USB-OTG Bus Power On Control
11 Software Debug Interface Data Bit 4

GPIO +01B0h GPIO mode control register 2 GPIO_MODE2

Bit	15	14	13	12	11	10	9	8	7	6	5	4	3	2	1	0
Name	GPIO15_M		GPIO14_M		GPIO13_M		GPIO12_M		GPIO11_M		GPIO10_M		GPIO9_M		GPIO8_M	
Type	R/W		R/W		R/W		R/W		R/W		R/W		R/W		R/W	
Reset	00		00		00		00		00		00		00		00	

GPIO8_M GPIO mode selection
00 Configured as GPIO function
01 32KHz Clock
10 USB-OTG Bus Charging Enable Control
11 Software Debug Interface Full Signal

GPIO9_M GPIO mode selection
00 Configured as GPIO function
01 26MHz Clock
10 13MHz Clock
11 Software Debug Interface Empty Signal

GPIO10_M GPIO mode selection
00 Configured as GPIO function
01 Parallel NAND FLASH/LCD Interface Data Bit 16
10 MMC4.0 Data Bit 4
11 DID (DSP ICE Data Signal)

GPIO11_M GPIO mode selection
00 Configured as GPIO function
01 Parallel NAND FLASH/LCD Interface Data Bit 17
10 MMC4.0 Data Bit 5
11 DSP Task ID 1

GPIO12_M GPIO mode selection
00 Configured as GPIO function
01 Sensor Reset Signal Output
10 Reserved

MTK Confidential Release for Konka

11 Reserved

GPIO13_M GPIO mode selection

00 Configured as GPIO function
01 Sensor Power Down Signal Output
10 Reserved
11 Reserved

GPIO14_M GPIO mode selection

00 Configured as GPIO function
01 Sensor Data Input 1
10 MMC4.0 Data Bit 6
11 Reserved

GPIO15_M GPIO mode selection

00 Configured as GPIO function
01 Sensor Data Input 0
10 MMC4.0 Data Bit 7
11 Reserved

GPIO +01C0h GPIO mode control register 3 GPIO_MODE3

Bit	15	14	13	12	11	10	9	8	7	6	5	4	3	2	1	0
Name	GPIO23_M		GPIO22_M		GPIO21_M		GPIO20_M		GPIO19_M		GPIO18_M		GPIO17_M		GPIO16_M	
Type	R/W		R/W		R/W		R/W		R/W		R/W		R/W		R/W	
Reset	00		00		00		00		00		00		00		00	

GPIO16_M GPIO mode selection

00 Configured as GPIO function
01 BPI_BUS6
10 Reserved
11 Reserved

GPIO17_M GPIO mode selection

00 Configured as GPIO function
01 BPI_BUS7
10 13MHz Clock
11 26MHz Clock

GPIO18_M GPIO mode selection

00 Configured as GPIO function
01 BPI_BUS8
10 6.5MHz Clock
11 32KHz Clock

GPIO19_M GPIO mode selection

00 Configured as GPIO function
01 BPI_BUS9
10 BSI_CS1
11 BFE Debug Signal Output

GPIO20_M GPIO mode selection

00 Configured as GPIO function
01 Serial LCD Interface/PM IC Interface Clock Signal
10 TDMA Timer Debug Port Clock Output
11 TDMA Timer Uplink Frame Enable Signal

GPIO21_M GPIO mode selection

MTK Confidential Release for Konka

00 Configured as GPIO function
01 Serial LCD Interface Address/Data Signal
10 TDMA Timer Debug Port Data Output 1
11 TDMA Timer DIRQ Signal

GPIO22_M GPIO mode selection
00 Configured as GPIO function
01 Serial LCD Interface Data/PM IC Interface Data Signal
10 TDMA Timer Debug Port Data Output 0
11 TDMA Timer CTIRQ2 Signal

GPIO23_M GPIO mode selection
00 Configured as GPIO function
01 Serial LCD Interface/PM IC Interface Chip Select Signal 0
10 TDMA Timer Debug Port Frame Sync Signal
11 TDMA Timer CTIRQ1 Signal

GPIO +01D0h GPIO mode control register 4 GPIO_MODE4

Bit	15	14	13	12	11	10	9	8	7	6	5	4	3	2	1	0
Name	GPIO31_M		GPIO30_M		GPIO29_M		GPIO28_M		GPIO27_M		GPIO26_M		GPIO25_M		GPIO24_M	
Type	R/W		R/W		R/W		R/W		R/W		R/W		R/W		R/W	
Reset	00		00		00		00		00		00		00		00	

GPIO24_M GPIO mode selection
00 Configured as GPIO function
01 Serial LCD Interface Chip Select Signal 1
10 Parallel LCD Interface Chip Select Signal 2
11 TDMA Timer Event Validate Signal

GPIO25_M GPIO mode selection
00 Configured as GPIO function
01 Parallel LCD Interface Chip Select Signal 1
10 NAND FLASH Interface Chip Select Signal 1
11 DSP Task ID 0

GPIO26_M GPIO mode selection
00 NAND FLASH Interface Ready/Busy Signal
01 Configured as GPIO function
10 USB-OTG Session Valid Signal
11 Software Debug Interface Data Bit 2

GPIO27_M GPIO mode selection
00 NAND FLASH Interface Command Latch Signal
01 Configured as GPIO function
10 USB-OTG VBus Valid Signal
11 Software Debug Interface Data Bit 1

GPIO28_M GPIO mode selection
00 NAND FLASH Interface Address Latch Signal
01 Configured as GPIO function
10 USB-OTG Session End Signal
11 Software Debug Interface Data Bit 0

GPIO29_M GPIO mode selection
00 NAND FLASH Interface Write Strobe Signal
01 Configured as GPIO function

MTK Confidential Release for Konka

10 Reserved
11 Reserved

GPIO30_M GPIO mode selection
- **00** NAND FLASH Interface Read Strobe Signal
- **01** Configured as GPIO function
- **10** USB-OTG Bus Power Discharging Control Signal
- **11** Software Debug Interface Clock Output Signal

GPIO31_M GPIO mode selection
- **00** NAND FLASH Interface Chip Select Signal 0
- **01** Configured as GPIO function
- **10** Reserved
- **11** Reserved

GPIO +01E0h GPIO mode control register 5 GPIO_MODE5

Bit	15	14	13	12	11	10	9	8	7	6	5	4	3	2	1	0
Name	GPIO39_M		GPIO38_M		GPIO37_M		GPIO36_M		GPIO35_M		GPIO34_M		GPIO33_M		GPIO32_M	
Type	R/W		R/W		R/W		R/W		R/W		R/W		R/W		R/W	
Reset	00		00		00		00		00		00		00		00	

GPIO32_M GPIO mode selection
- **00** Configured as GPIO function
- **01** PWM1
- **10** TDMA Timer Uplink Frame Sync Signal
- **11** DSP Task ID2

GPIO33_M GPIO mode selection
- **00** Configured as GPIO function
- **01** PWM2
- **10** TDMA Timer Downlink Frame Enable Signal
- **11** DSP Task ID3

GPIO34_M GPIO mode selection
- **00** Configured as GPIO function
- **01** Alerter
- **10** TDMA Timer Downlink Frame Sync Signal
- **11** DSP Task ID4

GPIO35_M GPIO mode selection
- **00** Configured as GPIO function
- **01** VCXO Enable Signal Input
- **10** Reserved
- **11** Reserved

GPIO36_M GPIO mode selection
- **00** Configured as GPIO function
- **01** MIRQ Signal
- **10** 6.5 MHz Clock Signal
- **11** 32 KHz Clock Signal

GPIO37_M GPIO mode selection
- **00** Configured as GPIO function
- **01** UART2 RXD Signal
- **10** UART3 CTS Signal
- **11** Reserved

MTK Confidential Release for Konka

GPIO38_M GPIO mode selection
- **00** Configured as GPIO function
- **01** UART2 TXD Signal
- **10** UART3 RTS Signal
- **11** Reserved

GPIO39_M GPIO mode selection
- **00** Configured as GPIO function
- **01** UART3 RXD Signal
- **10** Reserved
- **11** Reserved

GPIO +01F0h GPIO mode control register 6 GPIO_MODE6

Bit	15	14	13	12	11	10	9	8	7	6	5	4	3	2	1	0
Name	GPIO47_M		GPIO46_M		GPIO45_M		GPIO44_M		GPIO43_M		GPIO42_M		GPIO41_M		GPIO40_M	
Type	R/W		R/W		R/W		R/W		R/W		R/W		R/W		R/W	
Reset	00		00		00		00		00		00		00		00	

GPIO40_M GPIO mode selection
- **00** Configured as GPIO function
- **01** UART3 TXD Signal
- **10** Reserved
- **11** DSP Task ID5

GPIO41_M GPIO mode selection
- **00** Configured as GPIO function
- **01** IrDA RXD Signal
- **10** UART2 CTS Signal
- **11** Software Debug Interface Data 15

GPIO42_M GPIO mode selection
- **00** Configured as GPIO function
- **01** IrDA TXD Signal
- **10** UART2 RTS Signal
- **11** Software Debug Interface Data 14

GPIO43_M GPIO mode selection
- **00** Configured as GPIO function
- **01** IrDA Power Down Control Signal
- **10** Reserved
- **11** Software Debug Interface Data 13

GPIO44_M GPIO mode selection
- **00** Keypad Row 5 Scan Signal
- **01** Configured as GPIO function
- **10** ARM Clock Output
- **11** TV_CK Clock Output

GPIO45_M GPIO mode selection
- **00** Keypad Row 4 Scan Signal
- **01** Configured as GPIO function
- **10** Internal AHB Bus Clock Output
- **11** DSP Clock Output

GPIO46_M GPIO mode selection
- **00** Keypad Row 3 Scan Signal

MTK Confidential Release for Konka

01 Configured as GPIO function
10 TPLL Clock Output
11 SLOW_CK Clock Output

GPIO47_M GPIO mode selection
00 Keypad Row 2 Scan Signal
01 Configured as GPIO function
10 MCU/DSP PLL Clock Output
11 UPLL Clock Output

GPIO +0200h GPIO mode control register 7 GPIO_MODE7

Bit	15	14	13	12	11	10	9	8	7	6	5	4	3	2	1	0
Name	GPIO55		GPIO54		GPIO53		GPIO52		GPIO51		GPIO50		GPIO49		GPIO48	
Type	R/W		R/W		R/W		R/W		R/W		R/W		R/W		R/W	
Reset	0		0		0		0		0		0		0		0	

GPIO48_M GPIO mode selection
00 Configured as GPIO function
01 SIM Interface Voltage Select Signal
10 Reserved
11 Reserved

GPIO49_M GPIO mode selection
00 Configured as GPIO function
01 Digital Audio Interface Clock Output
10 Reserved
11 Software Debug Interface Data Bit 12

GPIO50_M GPIO mode selection
00 Configured as GPIO function
01 Digital Audio Interface PCM Data Output
10 Reserved
11 Software Debug Interface Data Bit 11

GPIO51_M GPIO mode selection
00 Configured as GPIO function
01 Digital Audio Interface PCM Data Input
10 Reserved
11 Software Debug Interface Data Bit 10

GPIO52_M GPIO mode selection
00 Configured as GPIO function
01 Digital Audio Interface Reset Signal Output
10 Reserved
11 Software Debug Interface Data Bit 9

GPIO53_M GPIO mode selection
00 Configured as GPIO function
01 Digital Audio Interface Synchronization Signal Input
10 Reserved
11 Software Debug Interface Data Bit 8

GPIO54_M GPIO mode selection
00 NAND FLASH/Parallel LCD Interface Data Bit 8
01 Configured as GPIO function
10 Reserved

MTK Confidential Release for Konka

11 Software Debug Interface Address Bit 1

GPIO55_M GPIO mode selection

00 NAND FLASH/Parallel LCD Interface Data Bit 9

01 Configured as GPIO function

10 Reserved

11 Software Debug Interface Address Bit 0

GPIO +0210h GPIO mode control register 8 GPIO_MODE8

Bit	15	14	13	12	11	10	9	8	7	6	5	4	3	2	1	0
Name	GPIO63		GPIO62		GPIO61		GPIO60		GPIO59		GPIO58		GPIO57		GPIO56	
Type	R/W		R/W		R/W		R/W		R/W		R/W		R/W		R/W	
Reset	0		0		0		0		0		0		0		0	

GPIO56_M GPIO mode selection

00 NAND FLASH/Parallel LCD Interface Data Bit 10

01 Configured as GPIO function

10 Reserved

11 Software Debug Interface Read Output Enable Control

GPIO57_M GPIO mode selection

00 NAND FLASH/Parallel LCD Interface Data Bit 11

01 Configured as GPIO function

10 Reserved

11 Software Debug Interface Read Strobe Control

GPIO58_M GPIO mode selection

00 NAND FLASH/Parallel LCD Interface Data Bit 12

01 Configured as GPIO function

10 Reserved

11 Software Debug Interface Write Strobe Control

GPIO59_M GPIO mode selection

00 NAND FLASH/Parallel LCD Interface Data Bit 13

01 Configured as GPIO function

10 Reserved

11 Software Debug Interface Packet End Strobe Control

GPIO60_M GPIO mode selection

00 NAND FLASH/Parallel LCD Interface Data Bit 14

01 Configured as GPIO function

10 Reserved

11 DICK (DSP ICE Clock Input)

GPIO61_M GPIO mode selection

00 NAND FLASH/Parallel LCD Interface Data Bit 15

01 Configured as GPIO function

10 Reserved

11 DIMS (DSP ICE Mode Select)

GPIO62_M GPIO mode selection

00 Sensor Input Data Bit 2

01 Configured as GPIO function

10 Reserved

11 Reserved

GPIO63_M GPIO mode selection

MTK Confidential Release for Konka

00 Configured as GPIO function
01 MFIQ Signal
10 USB-OTG ID
11 Software Debug Interface Data Bit 3

GPIO +0220h GPIO mode control register 9 GPIO_MODE9

Bit	15	14	13	12	11	10	9	8	7	6	5	4	3	2	1	0
Name	GPIO71		GPIO70		GPIO69		GPIO68									
Type	R/W		R/W		R/W		R/W									
Reset	0		0		0		0									

GPIO68_M GPIO mode selection
00 Sensor Input Data Bit 3
01 Configured as GPIO function
10 Reserved
11 Reserved

GPIO69_M GPIO mode selection
00 Sensor Input Data Bit 4
01 Configured as GPIO function
10 Reserved
11 Reserved

GPIO70_M GPIO mode selection
00 Sensor Input Data Bit 5
01 Configured as GPIO function
10 Reserved
11 Reserved

GPIO71_M GPIO mode selection
00 Sensor Input Data Bit 6
01 Configured as GPIO function
10 Reserved
11 Reserved

GPIO +0230h GPIO mode control register 10 GPIO_MODE10

Bit	15	14	13	12	11	10	9	8	7	6	5	4	3	2	1	0
Name											GPIO74		GPIO73		GPIO72	
Type											R/W		R/W		R/W	
Reset											0		0		0	

GPIO72_M GPIO mode selection
00 Sensor Input Data Bit 7
01 Configured as GPIO function
10 Reserved
11 Reserved

GPIO73_M GPIO mode selection
00 Sensor Input Data Bit 8
01 Configured as GPIO function
10 Reserved
11 Reserved

GPIO74_M GPIO mode selection
00 Sensor Input Data Bit 9

MTK Confidential Release for Konka

01 Configured as GPIO function
10 Reserved
11 Reserved

GPIO +0240h GPO mode control register 1 GPO_MODE1

Bit	15	14	13	12	11	10	9	8	7	6	5	4	3	2	1	0
Name											GPO2_M		GPO1_M		GPO0_M	
Type											R/W		R/W		R/W	
Reset											01		01		01	

GPO0_M GPO mode selection
00 Configured as GPO function
01 VCXO Enable Signal Output Active High
10 Reserved
11 Reserved

GPO1_M GPO mode selection
00 Configured as GPO function
01 VCXO Enable Signal Output Active Low
10 Reserved
11 Reserved

GPO2_M GPO mode selection
00 Configured as GPO function
01 External Memory Interface Power Down Control for Pseudo SRAM
10 Reserved
11 Reserved

GPIO+xxx4h GPIO xxx register SET GPIO_XXX_SET

For all registers addresses listed above, writing to the +4h addresse offset will perform a bit-wise **OR** function between the 16bit written value and the 16bit register value already existing in the corresponding GPIO_xxx registers.
Eg.
If GPIO_DIR1 (GPIO+0000h) = 16'h0F0F,
writing GPIO_DIR1_SET (GPIO+0004h) = 16'F0F0 will result in GPIO_DIR1 = 16'hFFFF.

GPIO+xxx8h GPIO xxx register CLR GPIO_XXX_CLR

For all registers addresses listed above, writing to the +8h addresse offset will perform a bit-wise **AND-NOT** function between the 16bit written value and the 16bit register value already existing in the corresponding GPIO_xxx registers.
Eg.
If GPIO_DIR1 (GPIO+0000h) = 16'h0F0F,
writing GPIO_DIR1_CLR (GPIO+0008h) = 16'0F0F will result in GPIO_DIR1 = 16'h0000.

4.6 General Purpose Timer

4.6.1 General Description

Three general-purpose timers are provided. The timers are 16 bits long and run independently of each other, although they share the same clock source. Two timers can operate in one of two modes: one-shot mode and auto-repeat mode; the other is a free running timer. In one-shot mode, when the timer counts down and reaches zero, it is halted. In auto-repeat mode, when the timer reaches zero, it simply resets to countdown initial value and repeats the countdown to zero; this loop repeats until the disable signal is set to 1. Regardless of the timer's mode, if the countdown initial

MTK Confidential Release for Konka

value (i.e. GPTIMER1_DAT for GPT1 or GPTIMER_DAT2 for GPT2) is written when the timer is running, the new initial value does not take effect until the next time the timer is restarted. In auto-repeat mode, the new countdown start value is used on the next countdown iteration. Therefore, before enabling the gptimer, the desired values for GPTIMER_DAT and the GPTIMER_PRESCALER registers must first be set.

4.6.2 Register Definitions

GPT +0000h GPT1 Control register

GPTIMER1_CON

Bit	15	14	13	12	11	10	9	8	7	6	5	4	3	2	1	0
Name	EN	MODE														
Type	R/W	R/W														
Reset	0	0														

MODE This register controls GPT1 to count repeatedly (in a loop) or just one-shot.

- **0** One-shot mode is selected.
- **1** Auto-repeat mode is selected.

EN This register controls GPT1 to start counting or to stop.

- **0** GPT1 is disabled.
- **1** GPT1 is enabled.

GPT +0004h GPT1 Time-Out Interval register

GPTIMER1_DAT

Bit	15	14	13	12	11	10	9	8	7	6	5	4	3	2	1	0
Name	CNT [15:0]															
Type	R/W															
Reset	FFFFh															

CNT [15:0] Initial counting value. GPT1 counts down from GPTIMER1_DAT. When GPT1 counts down to zero, a GPT1 interrupt is generated.

GPT +0008h GPT2 Control register

GPTIMER2_CON

Bit	15	14	13	12	11	10	9	8	7	6	5	4	3	2	1	0
Name	EN	MODE														
Type	R/W	R/W														
Reset	0	0														

MODE This register controls GPT2 to count repeatedly (in a loop) or just one-shot.

- **0** One-shot mode is selected
- **1** Auto-repeat mode is selected

EN This register controls GPT2 to start counting or to stop.

- **0** GPT2 is disabled.
- **1** GPT2 is enabled.

GPT +000Ch GPT2 Time-Out Interval register

GPTIMER2_DAT

Bit	15	14	13	12	11	10	9	8	7	6	5	4	3	2	1	0
Name	CNT [15:0]															
Type	R/W															
Reset	FFFFh															

MTK Confidential Release for Konka

CNT [15:0] Initial counting value. GPT2 counts down from GPTIMER2_DAT. When GPT2 counts down to zero, a GPT2 interrupt is generated.

GPT +0010h GPT Status register GPTIMER_STA

Bit	15	14	13	12	11	10	9	8	7	6	5	4	3	2	1	0
Name															GPT2	GPT1
Type															RC	RC
Reset															0	0

This register illustrates the gptimer timeout status. Each flag is set when the corresponding timer countdown completes, and can be cleared when the CPU reads the status register.

GPT +0014h GPT1 Prescaler register GPTIMER1_PRESCALER

Bit	15	14	13	12	11	10	9	8	7	6	5	4	3	2	1	0
Name														PRESCALER [2:0]		
Type														R/W		
Reset														100b		

PRESCALER This register controls the counting clock for gptimer1.

000 16 KHz
001 8 KHz
010 4 KHz
011 2 KHz
100 1 KHz
101 500 Hz
110 250 Hz
111 125 Hz

GPT +0018h GPT2 Prescaler register GPTIMER2_PRESCALER

Bit	15	14	13	12	11	10	9	8	7	6	5	4	3	2	1	0
Name														PRESCALER [2:0]		
Type														R/W		
Reset														100b		

PRESCALER This register controls the counting clock for gptimer2.

000 16 KHz
001 8 KHz
010 4 KHz
011 2 KHz
100 1 KHz
101 500 Hz
110 250 Hz
111 125 Hz

GPT+001Ch GPT3 Control register GPTIMER3_CON

Bit	15	14	13	12	11	10	9	8	7	6	5	4	3	2	1	0
Name																EN
Type																R/W
Reset																0

MTK Confidential Release for Konka

EN This register controls GPT3 to start counting or to stop.

0 GPT3 is disabled.

1 GPT3 is enabled.

GPT+0020h GPT3 Time-Out Interval register

GPTIMER3_DAT

Bit	15	14	13	12	11	10	9	8	7	6	5	4	3	2	1	0
Name	CNT[15:0]															
Type	RO															
Reset	0															

CNT [15:0] If EN=1, GPT3 is a free running timer . Software reads this register for the countdown start value for GPT3.

GPT+0024h GPT3 Prescaler register

GPTIMER3_PRESCALER

Bit	15	14	13	12	11	10	9	8	7	6	5	4	3	2	1	0
Name														PRESCALER [2:0]		
Type														R/W		
Reset														100b		

PRESCALER This register controls the counting clock for gptimer3.

000 16 KHz

001 8 KHz

010 4 KHz

011 2 KHz

100 1 KHz

101 500 Hz

110 250 Hz

112 125 Hz

4.7 UART

4.7.1 General Description

MT6228 houses three UARTs. The UARTs provide full duplex serial communication channels between the MT6228 and external devices.

The UART has M16C450 and M16550A modes of operation, which are compatible with a range of standard software drivers. The extensions have been designed to be broadly software compatible with 16550A variants, but certain areas offer no consensus.

In common with the M16550A, the UART supports word lengths from five to eight bits, an optional parity bit and one or two stop bits, and is fully programmable by an 8-bit CPU interface. A 16-bit programmable baud rate generator and an 8-bit scratch register are included, together with separate transmit and receive FIFOs. Eight modem control lines and a diagnostic loop-back mode are provided. The UART also includes two DMA handshake lines, used to indicate when the FIFOs are ready to transfer data to the CPU. Interrupts can be generated from any of the 10 sources.

Note: The UART has been designed so that all internal operations are synchronized by the CLK signal. This

MTK Confidential Release for Konka

synchronization results in minor timing differences between the UART and the industry standard 16550A device, which means that the core is not clock for clock identical to the original device.

After a hardware reset, the UART is in M16C450 mode. Its FIFOs can be enabled and the UART can then enter M16550A mode. The UART adds further functionality beyond M16550A mode. Each of the extended functions can be selected individually under software control.

The UART provides more powerful enhancements than the industry-standard 16550:

- Hardware flow control. This feature is very useful when the ISR latency is hard to predict and control in the embedded applications. The MCU is relieved of having to fetch the received data within a fixed amount of time.
- Output of an IR-compatible electrical pulse with a width 3/16 of that of a regular bit period.

Note: In order to enable any of the enhancements, the Enhanced Mode bit, EFR[4], must be set. If EFR[4] is not set, IER[7:5], FCR[5:4], ISR[5:4] and MCR[7:6] cannot be written. The Enhanced Mode bit ensures that the UART is backward compatible with software that has been written for 16C450 and 16550A devices.

Figure 49 shows the block diagram of the MT6228 UART device.

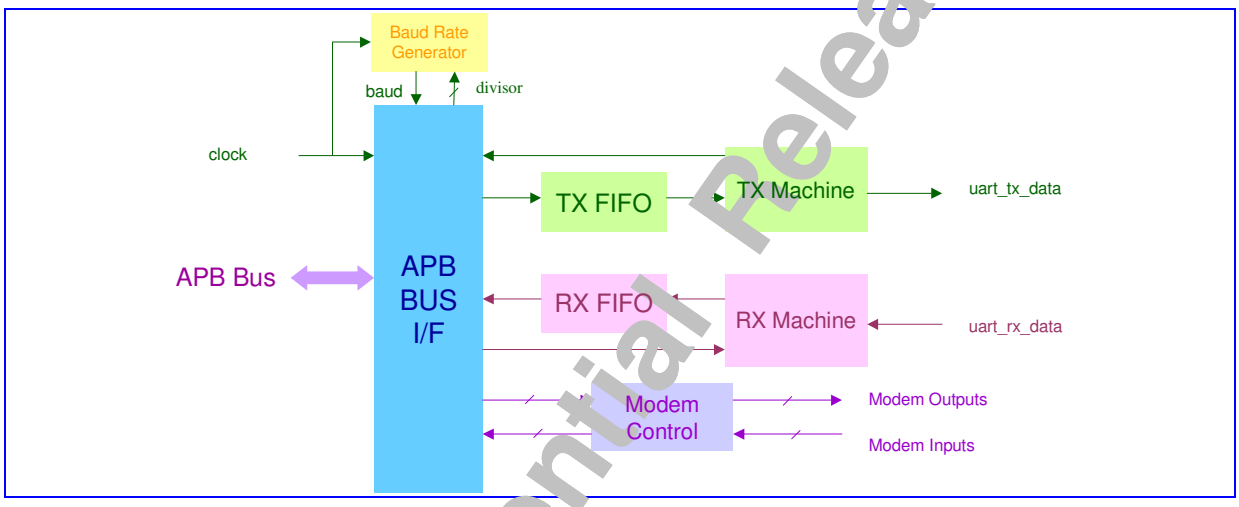

Figure 49 Block Diagram of UART

4.7.2 Register Definitions

n = 1, 2, 3; for uart1, uart2 and uart3 respectively.

UARTn+0000h RX Buffer Register — UARTn_RBR

Bit	15	14	13	12	11	10	9	8	7	6	5	4	3	2	1	0
Name									RBR[7:0]							
Type									RO							

RBR RX Buffer Register. Read-only register. The received data can be read by accessing this register. Modified when LCR[7] = 0.

UARTn+0000h TX Holding Register — UARTn_THR

Bit	15	14	13	12	11	10	9	8	7	6	5	4	3	2	1	0
Name									THR[7:0]							
Type									WO							

MTK Confidential Release for Konka

THR TX Holding Register. Write-only register. The data to be transmitted is written to this register, and then sent to the PC via serial communication.
Modified when LCR[7] = 0.

UARTn+0004h Interrupt Enable Register — UARTn_IER

Bit	15	14	13	12	11	10	9	8	7	6	5	4	3	2	1	0
Name									CTSI	RTSI	XOFFI	X	EDSSI	ELSI	ETBEI	ERBFI
Type									R/W							
Reset									0							

IER By storing a '1' to a specific bit position, the interrupt associated with that bit is enabled. Otherwise, the interrupt is disabled.
IER[3:0] are modified when LCR[7] = 0.
IER[7:4] are modified when LCR[7] = 0 & EFR[4] = 1.

CTSI Masks an interrupt that is generated when a rising edge is detected on the CTS modem control line.
Note*:* This interrupt is only enabled when hardware flow control is enabled.
- **0** Unmask an interrupt that is generated when a rising edge is detected on the CTS modem control line.
- **1** Mask an interrupt that is generated when a rising edge is detected on the CTS modem control line.

RTSI Masks an interrupt that is generated when a rising edge is detected on the RTS modem control line.
Note*:* This interrupt is only enabled when hardware flow control is enabled.
- **0** Unmask an interrupt that is generated when a rising edge is detected on the RTS modem control line.
- **1** Mask an interrupt that is generated when a rising edge is detected on the RTS modem control line.

XOFFI Masks an interrupt that is generated when an XOFF character is received.
Note*:* This interrupt is only enabled when software flow control is enabled.
- **0** Unmask an interrupt that is generated when an XOFF character is received.
- **1** Mask an interrupt that is generated when an XOFF character is received.

EDSSI When set ("1"), an interrupt is generated if DDCD, TERI, DDSR or DCTS (MSR[4:1]) becomes set.
- **0** No interrupt is generated if DDCD, TERI, DDSR or DCTS (MSR[4:1]) becomes set.
- **1** An interrupt is generated if DDCD, TERI, DDSR or DCTS (MSR[4:1]) becomes set.

ELSI When set ("1"), an interrupt is generated if BI, FE, PE or OE (LSR[4:1]) becomes set.
- **0** No interrupt is generated if BI, FE, PE or OE (LSR[4:1]) becomes set.
- **1** An interrupt is generated if BI, FE, PE or OE (LSR[4:1]) becomes set.

ETBEI When set ("1"), an interrupt is generated if the TX Holding Register is empty or the contents of the TX FIFO have been reduced to its Trigger Level.
- **0** No interrupt is generated if the TX Holding Register is empty or the contents of the TX FIFO have been reduced to its Trigger Level.
- **1** An interrupt is generated if the TX Holding Register is empty or the contents of the TX FIFO have been reduced to its Trigger Level

ERBFI When set ("1"), an interrupt is generated if the RX Buffer contains data.
- **0** No interrupt is generated if the RX Buffer contains data.
- **1** An interrupt is generated if the RX Buffer contains data.

UARTn+0008h Interrupt Identification Register — UARTn_IIR

Bit	15	14	13	12	11	10	9	8	7	6	5	4	3	2	1	0
Name									FIFOE		ID4	ID3	ID2	ID1	ID0	NINT
Type									RO							
Reset									0	0	0	0	0	0	0	1

IIR Identify if there are pending interrupts; ID4 and ID3 are presented only when EFR[4] = 1.
The following table gives the IIR[5:0] codes associated with the possible interrupts:

MTK Confidential Release for Konka

IIR[5:0]	Priority Level	Interrupt	Source
000001	-	No interrupt pending	
000110	1	Line Status Interrupt	BI, FE, PE or OE set in LSR
000100	2	RX Data Received	RX Data received or RX Trigger Level reached.
001100	2	RX Data Timeout	Timeout on character in RX FIFO.
000010	3	TX Holding Register Empty	TX Holding Register empty or TX FIFO Trigger Level reached.
000000	4	Modem Status change	DDCD, TERI, DDSR or DCTS set in MSR
010000	5	Software Flow Control	XOFF Character received
100000	6	Hardware Flow Control	CTS or RTS Rising Edge

Table 25 The IIR[5:0] codes associated with the possible interrupts

Line Status Interrupt: A RX Line Status Interrupt (IIR[5:0`] == 000110b) is generated if ELSI (IER[2]) is set and any of BI, FE, PE or OE (LSR[4:1]) becomes set. The interrupt is cleared by reading the Line Status Register.

RX Data Received Interrupt: A RX Received interrupt (IER[5:0] == 000100b) is generated if EFRBI (IER[0]) is set and either RX Data is placed in the RX Buffer Register or the RX Trigger Level is reached. The interrupt is cleared by reading the RX Buffer Register or the RX FIFO (if enabled).

RX Data Timeout Interrupt:

When virtual FIFO mode is disabled, RX Data Timeout Interrupt is generated if all of the following apply:

1. FIFO contains at least one character;
2. The most recent character was received longer than four character periods ago (including all start, parity and stop bits);
3. The most recent CPU read of the FIFO was longer than four character periods ago.

The timeout timer is restarted on receipt of a new byte from the RX Shift Register, or on a CPU read from the RX FIFO.

The RX Data Timeout Interrupt is enabled by setting EFRBI (IER[0]) to 1, and is cleared by reading RX FIFO.

When virtual FIFO mode is enabled, RX Data Timeout Interrupt is generated if all of the following apply:

1. FIFO is empty;
2. The most recent character was received longer than four character periods ago (including all start, parity and stop bits);
3. The most recent CPU read of the FIFO was longer than four character periods ago.

The timeout timer is restarted on receipt of a new byte from the RX Shift Register.

RX Holding Register Empty Interrupt: A TX Holding Register Empty Interrupt (IIR[5:0] = 000010b) is generated if ETRBI (IER[1]) is set and either the TX Holding Register or, if FIFOs are enabled, the TX FIFO becomes empty. The interrupt is cleared by writing to the TX Holding Register or TX FIFO if FIFO enabled.

Modem Status Change Interrupt: A Modem Status Change Interrupt (IIR[5:0] = 000000b) is generated if EDSSI (IER[3]) is set and either DDCD, TERI, DDSR or DCTS (MSR[3:0]) becomes set. The interrupt is cleared by reading the Modem Status Register.

MTK Confidential Release for Konka

Software Flow Control Interrupt: A Software Flow Control Interrupt (IIR[5:0] = 010000b) is generated if Software Flow Control is enabled and XOFFI (IER[5]) becomes set, indicating that an XOFF character has been received. The interrupt is cleared by reading the Interrupt Identification Register.

Hardware Flow Control Interrupt: A Hardware Flow Control Interrupt (IER[5:0] = 100000b) is generated if Hardware Flow Control is enabled and either RTSI (IER[6]) or CTSI (IER[7]) becomes set indicating that a rising edge has been detected on either the RTS/CTS Modem Control line. The interrupt is cleared by reading the Interrupt Identification Register.

UARTn+0008h FIFO Control Register UARTn_FCR

Bit	15	14	13	12	11	10	9	8	7	6	5	4	3	2	1	0
Name									RFTL1	RFTL0	TFTL1	TFTL0	DMA1	CLRT	CLRR	FIFOE
Type									WO							

FCR FCR is used to control the trigger levels of the FIFOs, or flush the FIFOs.
FCR[7:6] is modified when LCR != BFh
FCR[5:4] is modified when LCR != BFh & EFR[4] = 1
FCR[4:0] is modified when LCR != BFh

FCR[7:6] RX FIFO trigger threshold
- **0** 1
- **0** 6
- **1** 12
- **2** 22

FCR[5:4] TX FIFO trigger threshold
- **0** 1
- **1** 4
- **2** 8
- **3** 14

DMA1 This bit determines the DMA mode, which the TXRDY and RXRDY pins support. TXRDY and RXRDY act to support single-byte transfers between the UART and memory (DMA mode 0) or multiple byte transfers (DMA mode1). Note that this bit has no effect unless the FIFOE bit is set as well
- **0** The device operates in DMA Mode 0.
- **1** The device operates in DMA Mode 1.

TXRDY – mode0: Goes active (low) when the TX FIFO or the TX Holding Register is empty. Becomes inactive when a byte is written to the Transmit channel.

TXRDY – mode1: Goes active (low) when there are no characters in the TX FIFO. Becomes inactive when the TX FIFO is full.

RXRDY – mode0: Becomes active (low) when at least one character is in the RX FIFO or the RX Buffer Register is full. Becomes inactive when there are no more characters in the RX FIFO or RX Buffer register.

RXRDY – mode1: Becomes active (low) when the RX FIFO Trigger Level is reached or an RX FIFO Character Timeout occurs. Goes inactive when the RX FIFO is empty.

CLRT Clear Transmit FIFO. This bit is self-clearing.
- **0** Leave TX FIFO intact.
- **1** Clear all the bytes in the TX FIFO.

CLRR Clear Receive FIFO. This bit is self-clearing.
- **0** Leave RX FIFO intact.
- **1** Clear all the bytes in the RX FIFO.

FIFOE FIFO Enabled. This bit must be set to 1 for any of the other bits in the registers to have any effect.

MTK Confidential Release for Konka

0 Disable both the RX and TX FIFOs.

1 Enable both the RX and TX FIFOs.

UARTn+000Ch Line Control Register — UARTn_LCR

Bit	15	14	13	12	11	10	9	8	7	6	5	4	3	2	1	0
Name									DLAB	SB	SP	EPS	PEN	STB	WLS1	WLS0
Type									R/W							
Reset									0	0	0	0	0	0	0	0

LCR Line Control Register. Determines characteristics of serial communication signals.
Modified when LCR[7] = 0.

DLAB Divisor Latch Access Bit.

0 The RX and TX Registers are read/written at Address 0 and the IER register is read/written at Address 4.

1 The Divisor Latch LS is read/written at Address 0 and the Divisor Latch MS is read/written at Address 4.

SB Set Break

0 No effect

1 SOUT signal is forced into the "0" state.

SP Stick Parity

0 No effect.

1 The Parity bit is forced into a defined state, depending on the states of EPS and PEN:
If EPS=1 & PEN=1, the Parity bit is set and checked = 0.
If EPS=0 & PEN=1, the Parity bit is set and checked = 1.

EPS Even Parity Select

0 When EPS=0, an odd number of ones is sent and checked.

1 When EPS=1, an even number of ones is sent and checked.

PEN Parity Enable

0 The Parity is neither transmitted nor checked.

1 The Parity is transmitted and checked.

STB Number of STOP bits

0 One STOP bit is always added.

1 Two STOP bits are added after each character is sent; unless the character length is 5 when 1 STOP bit is added.

WLS1, 0 Word Length Select.

0 5 bits

1 6 bits

2 7 bits

3 8 bits

UARTn+0010h Modem Control Register — UARTn_MCR

Bit	15	14	13	12	11	10	9	8	7	6	5	4	3	2	1	0
Name									XOFF STATUS	IR ENABLE	X	LOOP	OUT2	OUT1	RTS	DTR
Type									R/W							
Reset									0	0	0	0	0	0	0	0

MCR Modem Control Register. Control interface signals of the UART.
MCR[4:0] are modified when LCR[7] = 0,
MCR[7:6] are modified when LCR[7] = 0 & EFR[4] = 1.

XOFF Status This is a read-only bit.

0 When an XON character is received.

MTK Confidential Release for Konka

1 When an XOFF character is received.

IR Enable Enable IrDA modulation/demodulation.

0 Disable IrDA modulation/demodulation.

1 Enable IrDA modulation/demodulation.

LOOP Loop-back control bit.

0 No loop-back is enabled.

1 Loop-back mode is enabled.

OUT2 Controls the state of the output NOUT2, even in loop mode.

0 NOUT2=1.

1 NOUT2=0.

OUT1 Controls the state of the output NOUT1, even in loop mode.

0 NOUT1=1.

1 NOUT1=0.

RTS Controls the state of the output NRTS, even in loop mode.

0 NRTS=1.

1 NRTS=0.

DTR Control the state of the output NDTR, even in loop mode.

0 NDTR=1.

1 NDTR=0.

UARTn+0014h Line Status Register UARTn_LSR

Bit	15	14	13	12	11	10	9	8	7	6	5	4	3	2	1	0
Name									FIFOERR	TEMT	THRE	BI	FE	PE	OE	DR
Type									R/W							
Reset									0	1	1	0	0	0	0	0

LSR Line Status Register.

Modified when LCR[7] = 0.

FIFOERR RX FIFO Error Indicator.

0 No PE, FE, BI set in the RX FIFO.

1 Set to 1 when there is at least one PE, FE or BI in the RX FIFO.

TEMT TX Holding Register (or TX FIFO) and the TX Shift Register are empty.

0 Empty conditions below are not met.

1 If FIFOs are enabled, the bit is set whenever the TX FIFO and the TX Shift Register are empty. If FIFOs are disabled, the bit is set whenever TX Holding Register and TX Shift Register are empty.

THRE Indicates if there is room for TX Holding Register or TX FIFO is reduced to its Trigger Level.

0 When at least one byte is written to the TX FIFO or the TX Shift Register.

1 Set whenever the contents of the TX FIFO are reduced to its Trigger Level (FIFOs are enabled), or whenever TX Holding Register is empty and ready to accept new data (FIFOs are disabled).

BI Break Interrupt.

0 Reset by the CPU reading this register

1 If the FIFOs are disabled, this bit is set whenever the SIN is held in the 0 state for more than one transmission time (START bit + DATA bits + PARITY + STOP bits).

If the FIFOs are enabled, this error is associated with a corresponding character in the FIFO and is flagged when this byte is at the top of the FIFO. When a break occurs, only one zero character is loaded into the FIFO: the next character transfer is enabled when SIN goes into the marking state and receives the next valid start bit.

FE Framing Error.

MTK Confidential Release for Konka

0 Reset by the CPU reading this register

1 If the FIFOs are disabled, this bit is set if the received data did not have a valid STOP bit. If the FIFOs are enabled, the state of this bit is revealed when the byte it refers to is the next to be read.

PE Parity Error

0 Reset by the CPU reading this register

1 If the FIFOs are disabled, this bit is set if the received data did not have a valid parity bit. If the FIFOs are enabled, the state of this bit is revealed when the referred byte is the next to be read.

OE Overrun Error.

0 Reset by the CPU reading this register.

1 If the FIFOs are disabled, this bit is set if the RX Buffer was not read by the CPU before new data from the RX Shift Register overwrote the previous contents.
If the FIFOs are enabled, an overrun error occurs when the RX FIFO is full and the RX Shift Register becomes full. OE is set as soon as this happens. The character in the Shift Register is then overwritten, but not transferred to the FIFO.

DR Data Ready.

0 Cleared by the CPU reading the RX Buffer or by reading all the FIFO bytes.

1 Set by the RX Buffer becoming full or by a byte being transferred into the FIFO.

UARTn+0018h Modem Status Register UARTn_MSR

Bit	15	14	13	12	11	10	9	8	7	6	5	4	3	2	1	0
Name									DCD	RI	DSR	CTS	DDCD	TERI	DDSR	DCTS
Type									R/W	R/W	R/W	R/W	R/W	R/W	R/W	R/W
Reset									Input	Input	Input	Input	0	0	0	0

Note: After a reset, D4-D7 are inputs. A modem status interrupt can be cleared by writing ‘0’ or set by writing ‘1’ to this register. D0-D3 can be written to.

Modified when LCR[7] = 0.

MSR Modem Status Register

DCD Data Carry Detect.
When Loop = "0", this value is the complement of the NDCD input signal.

When Loop = "1", this value is equal to the OUT2 bit in the Modem Control Register.

RI Ring Indicator.
When Loop = "0", this value is the complement of the NRI input signal.

When Loop = "1", this value is equal to the OUT1 bit in the Modem Control Register.

DSR Data Set Ready
When Loop = "0", this value is the complement of the NDSR input signal.

When Loop = "1", this value is equal to the DTR bit in the Modem Control Register.

CTS Clear To Send.
When Loop = "0", this value is the complement of the NCTS input signal.

When Loop = "1", this value is equal to the RTS bit in the Modem Control Register.

DDCD Delta Data Carry Detect.

0 The state of DCD has not changed since the Modem Status Register was last read

1 Set if the state of DCD has changed since the Modem Status Register was last read.

TERI Trailing Edge Ring Indicator

0 The NRI input does not change since this register was last read.

1 Set if the NRI input changes from “0” to “1” since this register was last read.

MTK Confidential Release for Konka

DDSR Delta Data Set Ready

- **0** Cleared if the state of DSR has not changed since this register was last read.
- **1** Set if the state of DSR has changed since this register was last read.

DCTS Delta Clear To Send

- **0** Cleared if the state of CTS has not changed since this register was last read.
- **1** Set if the state of CTS has changed since this register was last read.

UARTn+001Ch Scratch Register — UARTn_SCR

Bit	15	14	13	12	11	10	9	8	7	6	5	4	3	2	1	0
Name									SCR[7:0]							
Type									R/W							

A general purpose read/write register. After reset, its value is un-defined.

Modified when LCR[7] = 0.

UARTn+0000h Divisor Latch (LS) — UARTn_DLL

Bit	15	14	13	12	11	10	9	8	7	6	5	4	3	2	1	0
Name									DLL[7:0]							
Type									R/W							
Reset									1							

UARTn+0004h Divisor Latch (MS) — UARTn_DLM

Bit	15	14	13	12	11	10	9	8	7	6	5	4	3	2	1	0
Name									DLL[7:0]							
Type									R/W							
Reset									0							

Note: DLL & DLM can only be updated if DLAB is set ("1").. Note too that division by 1 generates a BAUD signal that is constantly high.

Modified when LCR[7] = 1.

The table below shows the divisor needed to generate a given baud rate from CLK inputs of 13, 26 MHz and 52 MHz. The effective clock enable generated is 16 x the required baud rate.

BAUD	13MHz	26MHz	52MHz
110	7386	14773	29545
300	2708	5417	10833
1200	677	1354	2708
2400	338	677	1354
4800	169	339	677
9600	85	169	339
19200	42	85	169
38400	21	42	85
57600	14	28	56
115200	6	14	28

Table 26 Divisor needed to generate a given baud rate

UARTn+0008h Enhanced Feature Register — UARTn_EFR

Bit	15	14	13	12	11	10	9	8	7	6	5	4	3	2	1	0

MTK Confidential Release for Konka

Name									AUTO CTS	AUTO RTS	D5	ENABLE -E	SW FLOW CONT[3:0]
Type									R/W	R/W	R/W	R/W	R/W
Reset									0	0	0	0	0

*NOTE: Only when LCR=BF'h

Auto CTS Enables hardware transmission flow control

- **0** Disabled.
- **1** Enabled.

Auto RTS Enables hardware reception flow control

- **0** Disabled.
- **1** Enabled.

Enable-E Enable enhancement features.

- **0** Disabled.
- **1** Enabled.

CONT[3:0] Software flow control bits.

- **00xx** No TX Flow Control
- **10xx** Transmit XON1/XOFF1 as flow control bytes
- **01xx** Transmit XON2/XOFF2 as flow control bytes
- **11xx** Transmit XON1 & XON2 and XOFF1 & XOFF2 as flow control words
- **xx00** No RX Flow Control
- **xx10** Receive XON1/XOFF1 as flow control bytes
- **xx01** Receive XON2/XOFF2 as flow control bytes
- **xx11** Receive XON1 & XON2 and XOFF1 & XOFF2 as flow control words

UARTn+0010h XON1 — UARTn_XON1

Bit	15	14	13	12	11	10	9	8	7	6	5	4	3	2	1	0
Name									XON1[7:0]							
Type									R/W							
Reset									0							

UARTn+0014h XON2 — UARTn_XON2

Bit	15	14	13	12	11	10	9	8	7	6	5	4	3	2	1	0
Name									XON2[7:0]							
Type									R/W							
Reset									0							

UARTn+0018h XOFF1 — UARTn_XOFF1

Bit	15	14	13	12	11	10	9	8	7	6	5	4	3	2	1	0
Name									XOFF1[7:0]							
Type									R/W							
Reset									0							

UARTn+001Ch XOFF2 — UARTn_XOFF2

Bit	15	14	13	12	11	10	9	8	7	6	5	4	3	2	1	0
Name									XOFF2[7:0]							
Type									R/W							
Reset									0							

*Note: XON1, XON2, XOFF1, XOFF2 are valid only when LCR=BFh.

MTK Confidential Release for Konka

UARTn+0020h AUTOBAUD_EN

UARTn_AUTOBAUD_EN

Bit	15	14	13	12	11	10	9	8	7	6	5	4	3	2	1	0
Name																AUTO_EN
Type																R/W
Reset																0

AUTOBAUD_EN Auto-baud enable signal

- **0** Auto-baud function disable
- **1** Auto-baud function enable

UARTn+0024h HIGH SPEED UART

UARTn_HIGHSPEED

Bit	15	14	13	12	11	10	9	8	7	6	5	4	3	2	1	0
Name															SPEED [1:0]	
Type															R/W	
Reset															0	

SPEED UART sample counter base

- **0** based on 16*baud_pulse, baud_rate = system clock frequency/16/{DLH, DLL}
- **1** based on 8*baud_pulse, baud_rate = system clock frequency/8/{DLH, DLL}
- **2** based on 4*baud_pulse, baud_rate = system clock frequency/4/{DLH, DLL}
- **3** based on sampe_count * baud_pulse, baud_rate = system clock frequency / sampe_count

The table below shows the divisor needed to generate a given baud rate from CLK inputs of 13M Hz based on different HIGHSPEED value.

BAUD	HIGHSPEED = 0	HIGHSPEED = 1	HIGHSPEED = 2
110	7386	14773	29545
300	2708	7386	14773
1200	677	2708	7386
2400	338	677	2708
4800	169	338	677
9600	85	169	338
19200	42	85	169
38400	21	42	85
57600	14	21	42
115200	7	14	21
230400	*	7	14
460800	*	*	7
921600	*	*	*

Table 27 Divisor needed to generate a given baud rate from 13MHz based on different HIGHSPEED value

The table below shows the divisor needed to generate a given baud rate from CLK inputs of 26 MHz based on different HIGHSPEED value.

BAUD	HIGHSPEED = 0	HIGHSPEED = 1	HIGHSPEED = 2
110	14773	29545	59091

MTK Confidential Release for Konka

300	5417	14773	29545
1200	1354	5417	14773
2400	677	1354	5417
4800	339	677	1354
9600	169	339	667
19200	85	169	339
38400	42	85	169
57600	28	42	85
115200	14	28	42
230400	7	14	28
460800	*	7	14
921600	*	*	7

Table 28 Divisor needed to generate a given baud rate from 26 MHz based on different HIGHSPEED value

The table below shows the divisor needed to generate a given baud rate from CLK inputs of 52MHz based on different HIGHSPEED value.

BAUD	HIGHSPEED = 0	HIGHSPEED = 1	HIGHSPEED = 2
110	29545	59091	118182
300	10833	29545	59091
1200	2708	10833	29545
2400	1354	2708	10833
4800	677	1354	2708
9600	339	677	1354
19200	169	339	677
38400	85	169	339
57600	56	85	169
115200	28	56	85
230400	14	28	56
460800	7	14	28
921600	*	7	14

Table 29 Divisor needed to generate a given baud rate from 52 MHz based on different HIGHSPEED value

UARTn+0028h SAMPLE_COUNT

UARTn_SAMPLE_COUNT

Bit	15	14	13	12	11	10	9	8	7	6	5	4	3	2	1	0
Name									SAMPLECOUNT [7:0]							
Type									R/W							
Reset									0							

When HIGHSPEED=3, the sample_count is the threshold value for UART sample counter (sample_num).

MTK Confidential Release for Konka

UARTn+002Ch SAMPLE_POINT UARTn_SAMPLE_POINT

Bit	15	14	13	12	11	10	9	8	7	6	5	4	3	2	1	0
Name									SAMPLEPOINT [7:0]							
Type									R/W							
Reset									ffh							

When HIGHSPEED=3, UART gets the input data when sample_count=sample_num.

e.g. system clock = 13MHz, 921600 = 13000000 / 14

sample_count = 14 and sample point = 7 (sample the central point to decrease the inaccuracy)

UARTn+0030h AUTOBAUD_REG UARTn_AUTOBAUD_REG

Bit	15	14	13	12	11	10	9	8	7	6	5	4	3	2	1	0
Name									BAUD_STAT[3:0]				BAUDRATE[3:0]			
Type									RO				RO			
Reset									0				0			

BAUD_RATE Autobaud baud rate

- **0** 115200
- **1** 57600
- **2** 38400
- **3** 19200
- **4** 9600
- **5** 4800
- **6** 2400
- **7** 1200
- **8** 300
- **9** 110

BAUDSTAT Autobaud format

- **0** Autobaud is detecting
- **1** AT_7N1
- **2** AT_7O1
- **3** AT_7E1
- **4** AT_8N1
- **5** AT_8O1
- **6** AT_8E1
- **7** at_7N1
- **8** at_7E1
- **9** at_7O1
- **10** at_8N1
- **11** at_8E1
- **12** at_8O1
- **13** Autobaud detection fails

UARTn+0038h AUTOBAUDSAMPLE UARTn_AUTOBAUDSAMPLE

Bit	15	14	13	12	11	10	9	8	7	6	5	4	3	2	1	0
Name										AUTOBAUDSAMPLE						
Type										R/W	R/W	R/W	R/W	R/W	R/W	R/W

MTK Confidential Release for Konka

Reset										dh

Since the system clock may change, autobaud sample duration should change as system clock changes. When system clock = 13MHz, autobaudsample = 6; when system clock = 26MHz, autobaudsample = 13.

UARTn+003Ch Guard time added register UARTn_GUARD

Bit	15	14	13	12	11	10	9	8	7	6	5	4	3	2	1	0
Name												GUARD_EN	GUARD_CNT[3:0]			
Type												R/W	R/W	R/W	R/W	R/W
Reset												0	0	0	0	0

GUARD_CNT Guard interval count value. Guard interval = (1/(system clock / 16 / div)) * GUARD_CNT.

GUARD_EN Guard interval add enable signal.

- **0** No guard interval added.
- **1** Add guard interval after stop bit.

UARTn+0040h Escape character register UARTn_ESCAPE_DAT

Bit	15	14	13	12	11	10	9	8	7	6	5	4	3	2	1	0
Name									ESCAPE_DAT[7:0]							
Type									R/W							
Reset									FFh							

ESCAPE_DAT Escape character added before software flow control data and escape character, i.e. if tx data is xon (31h), with esc_en =1, uart transmits data as esc + CEh (~xon).

UARTn+0044h Escape enable register UARTn_ESCAPE_EN

Bit	15	14	13	12	11	10	9	8	7	6	5	4	3	2	1	0
Name																ESC_EN
Type																R/W
Reset																0

ESC_EN Add escape character in transmitter and remove escape character in receiver by UART.

- **0** Do not deal with the escape character.
- **1** Add escape character in transmitter and remove escape character in receiver.

UARTn+0048h Sleep enable register UARTn_SLEEP_EN

Bit	15	14	13	12	11	10	9	8	7	6	5	4	3	2	1	0
Name																SELLP_EN
Type																R/W
Reset																0

SLEEP_EN For sleep mode issue

- **0** Do not deal with sleep mode indicate signal
- **1** To activate hardware flow control or software control according to software initial setting when chip enters sleep mode. Releasing hardware flow when chip wakes up; but for software control, uart sends xon when awaken and when FIFO does not reach threshold level.

UARTn+004Ch Virtual FIFO enable register UARTn_VFIFO_EN

Bit	15	14	13	12	11	10	9	8	7	6	5	4	3	2	1	0

MTK Confidential Release for Konka

Name																VFIFO_EN
Type																R/W
Reset																0

VFIFO_EN Virtual FIFO mechanism enable signal.

0 Disable VFIFO mode.

1 Enable VFIFO mode. When virtual mode is enabled, the flow control is based on the DMA threshold, and generates a timeout interrupt for DMA.

4.8 IrDA Framer

4.8.1 General Description

IrDA framer is implemented to reduce the CPU loading for IrDA transmissions by performing all the physical level protocol framing in hardware. From a software perspective, the framer need only prepare and process the raw data for transmission and reception. Generic DMA is required to move the data between IrDA framer's internal FIFO and software-designated memory. The IrDA framer supports IrDA SIR, MIR, and FIR modes of operation. SIR mode includes operation from 9600bps ~ 115200bps, MIR includes operation at 567000bps or 1152000bps, and FIR mode includes operation at 4Mbps.

4.8.2 Register Definitions

IRDA+0000h TX BUF and RX BUF — BUF

Bit	15	14	13	12	11	10	9	8	7	6	5	4	3	2	1	0
Name									BUF[7:0]							
Type									R/W							
Reset									0							

BUF IrDA Framer transmit or receive data.
A write to this register writes into the internal TX FIFO.
A read from this register reads from the internal RX FIFO.

IRDA+0004h TX BUF and RX BUF clear signal — BUF_CLEAR

Bit	15	14	13	12	11	10	9	8	7	6	5	4	3	2	1	0
Name																CLEAR
Type																R/W
Reset																0

CLEAR **SIR mode only**. When CLEAR=1, both the TX and RX FIFO are cleared. This is used primarily for debug purpose. Normal operation does not require this. This control signaled can only be issued under SIR mode.

IRDA+0008h Maximum Turn Around Time — MAX_T

Bit	15	14	13	12	11	10	9	8	7	6	5	4	3	2	1	0
Name			MAX_T [13:0]													
Type			R/W													
Reset			3E80h													

MAX_T The maximum time that a station can hold the P/F bit. This parameter along with the baud rate parameter dictates the maximum number of bytes that a station can transmit before passing the line to another station by transmitting a frame with the P/F bit. This parameter is used by one station to indicate the maximum time the other station can send before it must turn the link around. For baud rates less than 115200 kbps, 500 ms is the only valid value. The default value is 500 ms.

MTK Confidential Released for Konka

IRDA+000Ch Minimum Turn Around Time MIN_T

Bit	15	14	13	12	11	10	9	8	7	6	5	4	3	2	1	0
Name	MIN_T [15:0]															
Type	R/W															
Reset	FDE8h															

MIN_T Minimum turn around time, the default value is 10 ms. The minimum turn around time parameter deals with the time needed for a receiver to recover following saturation by transmission from the same device. This parameter corresponds to the required time delay between the last byte of the last frame sent by a station and the point at which it is ready to receive the first byte of a frame from another station, i.e. the latency for a transmit to complete and be ready to receive.

IRDA+0010h Number of additional BOFs prefixed to the beginning of a frame BOFS

Bit	15	14	13	12	11	10	9	8	7	6	5	4	3	2	1	0
Name									TYPE	BOFS [6:0]						
Type									R/W	R/W						
Reset									0	1011b						

BOFs **For SIR mode**: the additional BOFs parameter indicates the number of additional flags needed at the beginning of every frame. The main purpose for the additional BOFs is to provide a delay at the beginning of each frame for devices with a long interrupt latency.

For MIR mode: This parameter indicates the number of double STA's to transmit in the beginning. This value should be set to 0 (for default 2 STA's) for MIR mode, unless more are required.

For FIR mode: This parameter has no effect.

TYPE **SIR mode only**. Additional BOFs type.

1 BOF = C0h

0 BOF = FFh

IRDA+0014h Baud rate divisor DIV

Bit	15	14	13	12	11	10	9	8	7	6	5	4	3	2	1	0
Name	DIV[15:0]															
Type	R/W															
Reset	55h															

DIV Transmit or receive rate divider. Rate = System clock frequency / DIV/ 16. The default value is 55h when in contention mode. **This divisor is also used to determine the RX FIFO timeout threshold.**

IRDA+0018h Transmit frame size TX_FRAME_SIZE

Bit	15	14	13	12	11	10	9	8	7	6	5	4	3	2	1	0
Name					TX_FRAME_SIZE[11:0]											
Type					R/W											
Reset					40h											

TX_FRAME_SIZE Transmit frame size; the default value is 64 when in contention mode.

IRDA+001Ch Receiving frame1 size RX_FRAME1_SIZE

Bit	15	14	13	12	11	10	9	8	7	6	5	4	3	2	1	0
Name					RX_FRAME1_SIZE[11:0]											
Type					RO											
Reset					0											

MTK Confidential Release for Konka

RX_FRAME1_SIZE Reports the number of byte received. Includes only the A+C+I fields.

IRDA+0020h Transmit abort indication ABORT

Bit	15	14	13	12	11	10	9	8	7	6	5	4	3	2	1	0
Name																ABORT
Type																R/W
Reset																0

ABORT **SIR mode only**. When set 1, the framer transmits an abort sequence and closes the frame without an FCS field or an ending flag.

Note: Tx abort can be achieved in MIR and FIR by simply disabling the tx_en signal.

IRDA+0024h IrDA framer transmit enable signal TX_EN

Bit	15	14	13	12	11	10	9	8	7	6	5	4	3	2	1	0
Name													TX_ONE	TXINVERT	MODE	TX_EN
Type													R/W	R/W	R/W	R/W
Reset													0	0	0	0

TX_EN Transmit enable.

MODE **SIR mode only**. Modulation type selection.

- **0** 3/16 modulation
- **1** 1.61us

TXINVERT Invert the transmit signal.

- **0** Transmit signal is not inverted.
- **1** Transmit signal is inverted.

TX_ONE: Controls the transmit enable signal is one or not.

- **0** tx_en is not de-asserted until software programs a so.
- **1** tx_en is de-asserted (i.e. transmit disabled) automatically after one frame has been sent.

IRDA+0028h IrDA framer receive enable signal RX_EN

Bit	15	14	13	12	11	10	9	8	7	6	5	4	3	2	1	0
Name														RX_ONE	RXINVERT	RX_EN
Type														R/W	R/W	R/W
Reset														0	0	0

RX_EN Receive enable.

RXINVERT Invert the receive signal.

- **0** Receive signal is not inverted.
- **1** Receive signal is inverted.

RX_ONE Disable receive when get one frame.

- **0** rx_en is not de-asserted until software programs so.
- **1** rx_en is de-asserted (i.e. transmit disabled) automatically after one frame has been sent.

IRDA+002Ch FIFO trigger level indication TRIGGER

Bit	15	14	13	12	11	10	9	8	7	6	5	4	3	2	1	0
Name													RX_TRIG[		TX_TRIG	
Type													R/W		R/W	
Reset													0		0	

MTK Confidential Release for Konka

TX_TRIG TX FIFO interrupt trigger threshold. When the amount of data in the TX FIFO is less than the specified amount, dma req is asserted. (When TX_TRIG = 03, dma req is always asserted as long as FIFO is not full.)

00 0 byte
01 1 byte
02 8 byte
03 16 byte

RX_TRIG RX FIFO interrupt trigger threshold. When the amount of data in RX FIFO is above the specified amount, dma req is asserted.

00 1 byte
01 2 byte
02 3 byte

IRDA+0030h IRQ enable signal IRQ_ENABLE

Bit	15	14	13	12	11	10	9	8	7	6	5	4	3	2	1	0
Name				2NDRX_COMP	RXRESTART	THRESHTIMEOUT	FIFOTIMEOUT	TXABORT	RXABORT	MAXTIMEOUT	MINTIMEOUT	RXCOMPLETE	TXCOMPLETE	ERROR	RXTHRES	TXTHRES
Type					R/W	R/W	R/W	R/W	R/W	R/W	R/W	R/W	R/W	R/W	R/W	R/W
Reset					0	0	0	0	0	0	0	0	0	0	0	0

TXRES Transmit data reaches the threshold level. (For debug only. Should be set to 0.)

0 No interrupt is generated.
1 Interrupt is generated when transmit FIFO size reaches threshold.

RXRES Receive data reaches the threshold level. (For debug only. Should be set to 0.)

0 No interrupt is generated.
1 Interrupt is generated when receive FIFO size reaches threshold.

ERROR Error status interrupt enable.

0 No interrupt is generated.
1 Interrupt is generated when one of the error statuses occurs.

TXCOMPLETE Transmit one frame completely.

0 No interrupt is generated.
1 Interrupt is generated when transmitting one frame completely.

RXCOMPLETE Receive one frame completely.

0 No interrupt is generated.
1 Interrupt is generated when receiving one frame completely.

MINTIMEOUT Minimum time timeout.

0 No interrupt is generated.
1 Interrupt is generated when minimum timer is timed out.

MAXTIMEOUT Maximum time timeout.

0 No interrupt is generated.
1 Interrupt is generated when maximum timer is timed out.

RXABORT Receiving aborting frame.

0 No interrupt is generated.
1 Interrupt is generated when receiving aborting frame.

TXABORT **SIR mode only**. Transmitting aborting frame.

0 No interrupt is generated.
1 Interrupt is generated when transmitting aborting frame.

FIFOTIMEOUT FIFO timeout.

0 No interrupt is generated.

MTK Confidential Release for Konka

1 Interrupt is generated when FIFO timeout.

THRESHTIMEOUT Threshold time timeout.

0 No interrupt is generated.

1 Interrupt is generated when threshold timer is timed out.

RXRESTART **SIR mode only**. Receiving a new frame before one frame is received completely.

0 No interrupt is generated.

1 Interrupt is generated when receiving a new frame before one frame is received completely.

2NDRX_COMP Receiving second frame and get P/F bit.

0 No interrupt is generated.

1 Interrupt is generated when receiving second frame and get P/F bit completely.

IRDA+0034h Interrupt Status IRQ_STA

Bit	15	14	13	12	11	10	9	8	7	6	5	4	3	2	1	0
Name				2NDRX_COMP	RXRESTART	THRESHTIMEOUT	FIFOTIMEOUT	TXABORT	RXABORT	MAXTIMEOUT	MINTIMEOUT	RXCOMPLETE	TXCOMPLETE	ERROR	RXTRES	TXTRES
Type				RC	RC	RC	RC	RC	RC	RC	RC	RC	RC	RC	RC	RC
Reset				0	0	0	0	0	0	0	0	0	0	0	0	0

TXFIFO Transmit FIFO reaches threshold. (For debug only. Not recommended for normal usage.)

RXFIFO Receive FIFO reaches threshold. (For debug only. Not recommended for normal usage.)

ERROR Generated when any of status in Error Status register occurs.

Once the source of an interrupt is determined to be caused by an error (bit 2), the error status register should be read. Once read, both the error status register and the interrupt source are read-cleared. If the error status register indicates either a frame 1 or frame 2 error, the corresponding frame status register should be read.

TXCOMPLETE Transmitting one frame completely.

RXCOMPLETE Receiving one frame completely.

MINTIMEOUT Minimum turn around time timeout.

MAXTIMEOUT Maximum turn around time timeout.

RXABORT Receiving aborting frame.

TXABORT Transmitting aborting frame.

FIFOTIMEOUT FIFO is timeout.

THRESHTIMEOUT Threshold time timeout.

RXRESTART Receiving a new frame before one frame is received completely.

2NDRX_COMP Receiving second frame and get P/F bit completely.

IRDA+0038h ERROR STATUS register ERR_STATUS

Bit	15	14	13	12	11	10	9	8	7	6	5	4	3	2	1	0
Name										TX FIFO UNDERRUN	FRAME 2 DATA ERR	FRAME 1 DATA ERR	RESERVED2	RESERVED	OVERRUN	RXSIZE
Type										R/W	R/W	R/W	R/W	R/W	R/W	R/W
Reset										0	0	0	0	0	0	0

RXSIZE Receive frame size error.

OVERRUN Frame overrun.

RESERVED Reserved for future use.

RESERVED2 Reserved for future use.

FRAME1 DATA ERR Indicates that an error condition occurred in RX frame1. Must check the RX frame1 status.

FRAME2 DATA ERR Indicates that an error condition occurred in RX frame2. Must check the RX frame2 status.

MTK Confidential Release for Konka

TX FIFO UNDERRUN **MIR and FIR mode only**.

TX FIFO underrun has occurred. Data transmission is aborted. Software must reset the tx_en signal.

IRDA+003Ch Transceiver power on/off control. Transceiver mode select. TRANSCEIVER_PDN

Bit	15	14	13	12	11	10	9	8	7	6	5	4	3	2	1	0
Name														TXCVR CONFIG	TX MANUAL	TRANS_PDN
Type														R/W	R/W	R/W
Reset														0	0	0

TRANSCEIVER_PDN Used for power on/off control for external IrDA transceiver.

TX_MANUAL When txcvr config is set to 1, this bit can be used to select the operation mode of the external IrDA transceiver (some transceivers require selection between high speed and low speed operating modes), by software programming the desired sequence to transmit through the irda_txd pin.

TXCVR CONFIG

0 Irda_txd comes from core logic.

1 Irda_txd depends on tx_manual value.

IRDA+0040h Maximum number of receiving frame size RX_FRAME_MAX

Bit	15	14	13	12	11	10	9	8	7	6	5	4	3	2	1	0
Name					MAX_RX_FRAME_SIZE_											
Type					R/W											
Reset					0											

RX_FRAME_MAX Receive frame I field max size, when actual receiving frame size is larger than rx_frame_max, RXSIZE is asserted. The maximum allowed I field size is 2048.

IRDA+0044h Threshold Time THRESH_T

Bit	15	14	13	12	11	10	9	8	7	6	5	4	3	2	1	0
Name	DISCONNECT_TIME[15:0]															
Type	R/W															
Reset	bb8h															

THRESHOLD TIME Threshold time; used to control the time a station waits without receiving a valid frame before disconnecting the link. Associated with this is the time a station waits without receiving a valid frame before sending a status indication to the service user layer.

IRDA+0048h Counter enable signal COUNT_ENABLE

Bit	15	14	13	12	11	10	9	8	7	6	5	4	3	2	1	0
Name														THRESH_EN	MIN_EN	MAX_EN
Type														R/W	R/W	R/W
Reset														0	0	0

COUNT_ENABLE Counter enable signals.

IRDA+004Ch Indication of system clock rate CLOCK_RATE

Bit	15	14	13	12	11	10	9	8	7	6	5	4	3	2	1	0
Name															CLOCK_RATE	

MTK Confidential Release for Konka

Type															R/W
Reset															0

CLOCK_RATE **SIR mode only** Indication of the system clock rate.

- **0** 26 MHz
- **1** 52 MHz
- **2** 13 MHz

IRDA+0050h System Clock Rate Fix RATE_FIX

Bit	15	14	13	12	11	10	9	8	7	6	5	4	3	2	1	0
Name														CRC REPORT	SIR FRAMING SET	RATE_FIX
Type														R/W	R/W	R/W
Reset														0	0	0

RATE_FIX **SIR mode only** Fix the IrDA framer sample base clock rate as 13 MHz.

- **0** Clock rate based on clock_rate selection.
- **1** Clock rate fixed at 13 MHz.

SIR FRAMING SET **SIR mode only**. Framing error check condition.

- **0** Ignore the STOP bit of the last byte of a frame.
- **1** Check the STOP bit of the last byte of a frame.

CRC REPORT When set to 1, CRC error is reported via error status register and error interrupt.

IRDA+0054h RX Frame1 Status FRAME1_STATUS

Bit	15	14	13	12	11	10	9	8	7	6	5	4	3	2	1	0
Name										FIR STO ERR	FIR 4PPM ERR	MIR HDLC ERR	UNKNOW_ERROR	PF_DETECT	CRC_FAIL	FRAME_ERROR
Type										R/W	R/W	R/W	R/W	R/W	R/W	R/W
Reset										0	0	0	0	0	0	0

FRAME_ERROR **SIR mode only**. Framing error, i.e. STOP bit = 0.

- **0** No framing error
- **1** Framing error occurred

CRC_FAIL CRC check fail

- **2** CRC check successfully
- **3** CRC check fail

PF_DETECT P/F bit detect

- **0** Not a P/F bit frame
- **1** Detected P/F bit in this frame

UNKNOWN_ERROR **SIR mode only**. Receiving error data, i.e. escape character is followed by a character that is not an ESC, BOF, or EOF character.

- **0** Data received correctly.
- **1** Unknown error occurred.

MIR HDLC ERR **MIR mode only**. MIR HDLC encoding error

- **0** No error
- **1** Error

FIR 4PPM ERR **FIR mode only**. FIR 4ppm encoding error

- **0** No error
- **1** Error

MTK Confidential Release for Konka

FIR STO ERR **FIR mode only**. FIR STO sequence error

- **0** No error
- **1** Error

IRDA+0058h RX Frame2 Status

FRAME2_STATUS

Bit	15	14	13	12	11	10	9	8	7	6	5	4	3	2	1	0
Name										FIR STO ERR	FIR 4PPM ERR	MIR HDLC ERR	UNKNOW_ERROR	PF_DETECT	CRC_FAIL	FRAME_ERROR
Type										R/W	R/W	R/W	R/W	R/W	R/W	R/W
Reset										0	0	0	0	0	0	0

FRAME_ERROR **SIR mode only.** Framing error, i.e. STOP bit = 0

- **0** No framing error.
- **1** Framing error occurred.

CRC_FAIL CRC check fail.

- **0** CRC check successfully.
- **1** CRC check fail.

PF_DETECT P/F bit detect.

- **0** Not a P/F bit frame.
- **1** Detected P/F bit in this frame.

UNKNOWN_ERROR **SIR mode only**. Receiving error data, i.e. escape character is followed by a character that is not an ESC, BOF, or EOF character.

- **0** Data receiving correctly.
- **1** Unknown error occurred.

MIR HDLC ERR **MIR mode only**. MIR HDLC encoding error.

- **0** No error
- **1** Error

FIR 4PPM ERR **FIR mode only**.FIR 4ppm encoding error

- **0** No error
- **1** Error

FIR STO ERR **FIR mode only**.FIR STO sequence error

- **0** No error
- **1** Error

IRDA+005Ch Receiving frame2 size

RX_FRAME2_SIZE

Bit	15	14	13	12	11	10	9	8	7	6	5	4	3	2	1	0
Name					RX_FRAME2_SIZE[11:0]											
Type					RO											
Reset					0											

RX_FRAME2_SIZE Reports the number of byte received. Includes only the A+C+I fields.

IRDA+0060h Irda Mode Select

IRDA_MODE

Bit	15	14	13	12	11	10	9	8	7	6	5	4	3	2	1	0
Name														MIR SPEED	IRDA MODE	
Type														R/W	R/W	
Reset														0	00	

MTK Confidential Release for Konka

IRDA MODE Selects the IrDA operating mode. NOTE: this mode selection cannot be issued while transmitting or receiving.

- **00** IR mode
- **01** MIR mode
- **10** FIR mode

MIR SPEED Select the MIR speed.

- **0** 0.576 Mbps
- **1** 1.152 Mbps

IRDA+0064h Fifo Status FIFO_STAT

Bit	15	14	13	12	11	10	9	8	7	6	5	4	3	2	1	0
Name												RX FIFO HOLD	TX FIFO WR FULL	TX FIFO RD EMPTY	RX FIFO WR FULL	RX FIFO RD EMPTY
Type												RO	RO	RO	RO	RO
Reset												0	0	1	0	1

This register indicates the real time FIFO status, for monitoring purposes.

4.9 Real Time Clock

4.9.1 General Description

The Real Time Clock (RTC) module provides time and data information. The clock is based on a 32.768KHz oscillator with an independent power supply. When the mobile handset is powered off, a dedicated regulator supplies the RTC block. If the main battery is not present, a backup supply such as a small mercury cell battery or a large capacitor is used. In addition to providing timing data, an alarm interrupt is generated and can be used to power up the baseband core via the BBWAKEUP pin. Regulator interrupts corresponding to seconds, minutes, hours and days can be generated whenever the time counter value reaches a maximum value (e.g., 59 for seconds and minutes, 23 for hours, etc.). The year span is supported up to 2127. The maximum day-of-month values, which depend on the leap year condition, are stored in the RTC block.

4.9.2 Register Definitions

RTC+0000h Baseband power up RTC_BBPU

Bit	15	14	13	12	11	10	9	8	7	6	5	4	3	2	1	0
Name	KEY_BBPU												AUTO	BBPU	WRITE_EN	PWREN
Type	W												R/W	R/W	R/W	R/W

KEY_BBPU A bus write is acceptable only when KEY_BBPU=0x43.

AUTO Controls if BBWAKEUP is automatically in the low state when SYSRST# transitions from high to low.

- **0** BBWAKEUP is not automatically in the low state when SYSRST# transitions from high to low.
- **1** BBWAKEUP is automatically in the low state when SYSRST# transitions from high to low.

BBPU Controls the power of PMIC. If powerkey1=A357h and powerkey2=67D2h, PMIC takes on the value programmed by software; otherwise PMIC is low.

- **0** Power down
- **1** Power on

WRITE_EN When WRITE_EN is set to 0 by the software program, the RTC write interface is disabled until another system power on.

MTK Confidential Release for Konka

PWREN

- **0** RTC alarm has no action on power switch.
- **1** When an RTC alarm occurs, BBPU is set to 1, and the system powers on by RTC alarm wakeup.

RTC+0004h RTC IRQ status RTC_IRQ_STA

Bit	15	14	13	12	11	10	9	8	7	6	5	4	3	2	1	0
Name															TCSTA	ALSTA
Type															R/C	R/C

ALSTA This register indicates the IRQ status and whether or not the alarm condition has been met.

- **0** No IRQ occurred; the alarm condition has not been met.
- **1** IRQ occurred; the alarm condition has been met.

TCSTA This register indicates the IRQ status and whether or not the tick condition has been met.

- **0** No IRQ occurred; the tick condition has not been met.
- **1** IRQ occurred; the tick condition has been met.

RTC+0008h RTC IRQ enable RTC_IRQ_EN

Bit	15	14	13	12	11	10	9	8	7	6	5	4	3	2	1	0
Name	WING													ONESHOT	TC_EN	AL_EN
Type	R/O													R/W	R/W	R/W

ONESHOT Controls automatic reset of AL_EN and TC_EN.

AL_EN This register enables the control bit for IRQ generation if the alarm condition has been met.

- **0** Disable IRQ generation.
- **1** Enable the alarm time match interrupt. Clear the interrupt when ONESHOT is high upon generation of the corresponding IRQ.

TC_EN This register enables the control bit for IRQ generation if the tick condition has been met.

- **0** Disable IRQ generation.
- **1** Enable the tick time match interrupt. Clear the interrupt when ONESHOT is high upon generation of the corresponding IRQ.

WING This bit indicates that RTC is still writing to this register.

RTC+000Ch Counter increment IRQ enable RTC_CII_EN

Bit	15	14	13	12	11	10	9	8	7	6	5	4	3	2	1	0
Name	WING						1/8SECCII	1/4SECCII	1/2SECCII	YEACII	MTHCII	DOWCII	DOMCII	HOUCII	MINCII	SECCII
Type	R/O						R/W	R/W	R/W	R/W	R/W	R/W	R/W	R/W	R/W	R/W

This register activates or de-activates the IRQ generation when the TC counter reaches its maximum value.

SECCII Set this bit to 1 to activate the IRQ at each second update.

MINCII Set the bit to 1 to activate the IRQ at each minute update.

HOUCII Set the bit to 1 to activate the IRQ at each hour update.

DOMCII Set the bit to 1 to activate the IRQ at each day-of-month update.

DOWCII Set the bit to 1 to activate the IRQ at each day-of-week update.

MTHCII Set the bit to 1 to activate the IRQ at each month update.

YEACII Set the bit to 1 to activate the IRQ at each year update.

1/2SECCII Set the bit to 1 to activate the IRQ at each one-half of a second update.

1/4SECCII Set the bit to 1 to activate the IRQ at each one-fourth of a second update.

1/8SECCII Set the bit to 1 to activate the IRQ at each one-eighth of a second update.

MTK Confidential Release for Konka

WING This bit indicates RTC is still writing to this register.

RTC+0010h RTC alarm mask RTC_AL_MASK

Bit	15	14	13	12	11	10	9	8	7	6	5	4	3	2	1	0
Name	WING									YEA_MSK	MTH_MSK	DOW_MSK	DOM_MSK	HOU_MSK	MIN_MSK	SEC_MSK
Type	R/O									R/W	R/W	R/W	R/W	R/W	R/W	R/W

The alarm condition for alarm IRQ generation depends on whether or not the corresponding bit in this register is masked.

SEC_MSK

- **0** Condition (RTC_TC_SEC = RTC_AL_SEC) is checked to generate the alarm signal.
- **1** Condition (RTC_TC_SEC = RTC_AL_SEC) is masked, i.e. the value of RTC_TC_SEC does not affect the alarm IRQ generation.

MIN_MSK

- **0** Condition (RTC_TC_MIN = RTC_AL_MIN) is checked to generate the alarm signal.
- **1** Condition (RTC_TC_MIN = RTC_AL_MIN) is masked, i.e. the value of RTC_TC_MIN does not affect the alarm IRQ generation.

HOU_MSK

- **0** Condition (RTC_TC_HOU = RTC_AL_HOU) is checked to generate the alarm signal.
- **1** Condition (RTC_TC_HOU = RTC_AL_HOU) is masked, i.e. the value of RTC_TC_HOU does not affect the alarm IRQ generation.

DOM_MSK

- **0** Condition (RTC_TC_DOM = RTC_AL_DOM) is checked to generate the alarm signal.
- **1** Condition (RTC_TC_DOM = RTC_AL_DOM) is masked, i.e. the value of RTC_TC_DOM does not affect the alarm IRQ generation.

DOW_MSK

- **0** Condition (RTC_TC_DOW = RTC_AL_DOW) is checked to generate the alarm signal.
- **1** Condition (RTC_TC_DOW = RTC_AL_DOW) is masked, i.e. the value of RTC_TC_DOW does not affect the alarm IRQ generation.

MTH_MSK

- **0** Condition (RTC_TC_MTH = RTC_AL_MTH) is checked to generate the alarm signal.
- **1** Condition (RTC_TC_MTH = RTC_AL_MTH) is masked, i.e. the value of RTC_TC_MTH does not affect the alarm IRQ generation.

YEA_MSK

- **0** Condition (RTC_TC_YEA = RTC_AL_YEA) is checked to generate the alarm signal.
- **1** Condition (RTC_TC_YEA = RTC_AL_YEA) is masked, i.e. the value of RTC_TC_YEA does not affect the alarm IRQ generation.

WING This bit indicates RTC is still writing to this register.

RTC+0014h RTC seconds time counter register RTC_TC_SEC

Bit	15	14	13	12	11	10	9	8	7	6	5	4	3	2	1	0
Name	WING										TC_SECOND					
Type	R/O										R/W					

TC_SECOND The second initial value for the time counter. The range of its value is: 0-59.

WING This bit indicates RTC is still writing to this register.

RTC+0018h RTC minutes time counter register RTC_TC_MIN

Bit	15	14	13	12	11	10	9	8	7	6	5	4	3	2	1	0

MTK Confidential Release for Konka

Name	WING										TC_MINUTE
Type	R/O										R/W

TC_MINUTE The minute initial value for the time counter. The range of its value is: 0-59.

WING This bit indicates RTC is still writing to this register.

RTC+001Ch RTC hours time counter register RTC_TC_HOU

Bit	15	14	13	12	11	10	9	8	7	6	5	4	3	2	1	0
Name	WING											TC_HOUR				
Type	R/O											R/W				

TC_HOUR The hour initial value for the time counter. The range of its value is: 0-23.

WING This bit indicates RTC is still writing to this register.

RTC+0x0020 RTC day-of-month time counter register RTC_TC_DOM

Bit	15	14	13	12	11	10	9	8	7	6	5	4	3	2	1	0
Name	WING											TC_DOM				
Type	R/O											R/W				

TC_DOM The day-of-month initial value for the time counter. The day-of-month maximum value depends on the leap year condition, i.e. 2 LSB of year time counter are zeros.

WING This bit indicates RTC is still writing to this register.

RTC+0x0024 RTC day-of-week time counter register RTC_TC_DOW

Bit	15	14	13	12	11	10	9	8	7	6	5	4	3	2	1	0
Name	WING													TC_DOW		
Type	R/O													R/W		

TC_DOW The day-of-week initial value for the time counter. The range of its value is: 1-7.

WING This bit indicates RTC is still writing to this register.

RTC+0x0028 RTC month time counter register RTC_TC_MTH

Bit	15	14	13	12	11	10	9	8	7	6	5	4	3	2	1	0
Name	WING												TC_MONTH			
Type	R/O												R/W			

TC_MONTH The month initial value for the time counter. The range of its value is: 1-12.

WING This bit indicates RTC is still writing to this register.

RTC+0x002C RTC year time counter register RTC_TC_YEA

Bit	15	14	13	12	11	10	9	8	7	6	5	4	3	2	1	0
Name	WING									AL_SECOND						
Type	R/O									R/W						

TC_YEAR The year initial value for the time counter. The range of its value is: 0-127. (2000-2127)

WING This bit indicates RTC is still writing to this register.

RTC+0x0030 RTC second alarm setting register RTC_AL_SEC

Bit	15	14	13	12	11	10	9	8	7	6	5	4	3	2	1	0
Name	WING											AL_SECOND				
Type	R/O											R/W				

AL_SECOND The second value of the alarm counter setting. The range of its value is: 0-59.

WING This bit indicates RTC is still writing to this register.

MTK Confidential Release for Konka

RTC+0x0034 RTC minute alarm setting register RTC_AL_MIN

Bit	15	14	13	12	11	10	9	8	7	6	5	4	3	2	1	0
Name	WING										AL_MINUTE					
Type	R/O										R/W					

AL_MINUTE The minute value of the alarm counter setting. The range of its value is: 0-59.

WING This bit indicates RTC is still writing to this register.

RTC+0x0038 RTC hour alarm setting register RTC_AL_HOU

Bit	15	14	13	12	11	10	9	8	7	6	5	4	3	2	1	0
Name	WING											AL_HOUR				
Type	R/O											R/W				

AL_HOUR The hour value of the alarm counter setting. The range of its value is: 0-23.

WING This bit indicates RTC is still writing to this register.

RTC+0x003C RTC day-of-month alarm setting register RTC_AL_DOM

Bit	15	14	13	12	11	10	9	8	7	6	5	4	3	2	1	0
Name	WING											AL_DOM				
Type	R/O											R/W				

AL_DOM The day-of-month value of the alarm counter setting. The day-of-month maximum value depends on the leap year condition, i.e. 2 LSB of year time counter are zeros.

WING This bit indicates RTC is still writing to this register.

RTC+0x0040 RTC day-of-week alarm setting register RTC_AL_DOW

Bit	15	14	13	12	11	10	9	8	7	6	5	4	3	2	1	0
Name	WING													AL_DOW		
Type	R/O													R/W		

AL_DOW The day-of-week value of the alarm counter setting. The range of its value is: 1-7.

WING This bit indicates RTC is still writing to this register.

RTC+0x0044 RTC month alarm setting register RTC_AL_MTH

Bit	15	14	13	12	11	10	9	8	7	6	5	4	3	2	1	0
Name	WING												AL_MONTH			
Type	R/O												R/W			

AL_MONTH The month value of the alarm counter setting. The range of its value is: 1-12.

WING This bit indicates RTC is still writing to this register.

RTC+0x0048 RTC year alarm setting register RTC_AL_YEA

Bit	15	14	13	12	11	10	9	8	7	6	5	4	3	2	1	0
Name	WING											AL_YEAR				
Type	R/O											R/W				

AL_YEAR The year value of the alarm counter setting. The range of its value is: 0-127. (2000-2127)

WING This bit indicates RTC is still writing to this register.

RTC+0x004C XOSC bias current control register RTC_XOSCCALI

Bit	15	14	13	12	11	10	9	8	7	6	5	4	3	2	1	0
Name	WING											XOSCCALI				
Type	R/O											WO				

MTK Confidential Release for Konka

XOSCCALI This register controls the XOSC32 bias current. Before the first program by software, the XOSCCALI value is 11111b.

WING This bit indicates RTC is still writing to this register.

RTC+0050h RTC_POWERKEY1 register

RTC_POWERKEY1

Bit	15	14	13	12	11	10	9	8	7	6	5	4	3	2	1	0
Name	RTC_POWERKEY1															
Type	R/W															

RTC+0054h RTC_POWERKEY2 register

RTC_POWERKEY2

Bit	15	14	13	12	11	10	9	8	7	6	5	4	3	2	1	0
Name	RTC_POWERKEY2															
Type	R/W															

These register sets are used to determine if the real time clock has been programmed by software; i.e. the time value in real time clock is correct. When the real time clock is first powered on, the register contents are all undefined, therefore the time values shown are incorrect. Software needs to know if the real time clock has been programmed. Hence, these two registers are defined to solve this power-on issue. After software programs the correct value, these two register sets do not need to be updated. In addition to programming the correct time value, when the contents of these register sets are wrong, the interrupt is not generated. Therefore, the real time clock does not generate the interrupts before the software programs the registers; unwanted interrupt due to wrong time value do not occur. The correct values of these two register sets are:

RTC_POWERKEY1 A357h
RTC_POWERKEY2 67D2h

RTC+0058h PDN1

RTC_PDN1

Bit	15	14	13	12	11	10	9	8	7	6	5	4	3	2	1	0
Name	WING	DBING							RTC_PDN1[7:0]							
Type	R/O	R/O							R/W							

RTC_PDN1[3:1] is for reset de-bounce mechanism.

- **0** 4ms
- **1** 16ms
- **2** 64ms
- **3** 256ms
- **4** 512ms
- **5** 1024ms
- **6** 2048ms
- **7** 4096ms

RTC_PDN1[7:4] & RTC_PDN1[0] is the spare register for software to keep power on and power off state information.

DBING This bit indicates RTC is still de-bouncing.

WING This bit indicates RTC is still writing to this register.

RTC+005Ch PDN2

RTC_PDN2

Bit	15	14	13	12	11	10	9	8	7	6	5	4	3	2	1	0

MTK Confidential Release for Konka

Name	WING								RTC_PDN2[7:0]
Type	R/O								R/W

RTC_PDN2 The spare register for software to keep power on and power off state information.
WING This bit indicates RTC is still writing to this register.

RTC+0060h RTC writing completed flag RTC_WOK

Bit	15	14	13	12	11	10	9	8	7	6	5	4	3	2	1	0
Name														WING 3	WING 2	WING 1
Type														R/O	R/O	R/O

WING1 This bit indicates RTC is still writing POWERKEY1.
WING2 This bit indicates RTC is still writing POWERKEY2.
WING3 This bit indicates RTC is still writing BBPU.

4.10 Auxiliary ADC Unit

The auxiliary ADC unit is used to monitor the status of the battery and charger, to identify the plugged peripheral, and to perform temperature measurement. Seven input channels allow diverse applications in this unit.

Each channel can operate in one of two modes: immediate mode and timer-triggered mode. The mode of each channel can be individually selected through register AUXADC_CON0. For example, if the flag SYN0 in the register AUXADC_CON0 is set, the channel 0 is set in timer-triggered mode. Otherwise, the channel operates in immediate mode.

In immediate mode, the A/D converter samples the value once only when the flag in the AUXADC_CON1 register has been set. For example, if the flag IMM0 in AUXADC_CON1 is set, the A/D converter samples the data for channel 0. The IMM flags must be cleared and set again to initialize another sampling.

The value sampled for channel 0 is stored in register AUXADC_DAT0, the value for channel 1 is stored in register AUXADC_DAT1, etc.

If the AUTOSET flag in the register AUXADC_CON3 is set, the auto-sample function is enabled. The A/D converter samples the data for the channel in which the corresponding data register has been read. For example, in the case where the SYN1 flag is not set, the AUTOSET flag is set, when the data register AUXADC_DAT0 has been read, the A/D converter samples the next value for channel 1 immediately.

If multiple channels are selected at the same time, the task is performed sequentially on every selected channel. For example, if AUXADC_CON1 is set to 0x7f, that is, all 7 channels are selected, the state machine in the unit starts sampling from channel 6 to channel 0, and saves the values of each input channel in the respective registers. The same process also applies in timer-triggered mode.

In timer-triggered mode, the A/D converter samples the value for the channels in which the corresponding SYN flags are set when the TDMA timer counts to the value specified in the register TDMA_AUXEV1, which is placed in the TDMA timer. For example, if AUXADC_CON0 is set to 0x7f, all 7 channels are selected to be in timer-triggered mode. The state machine samples all 7 channels sequentially and save the values in registers from AUXADC_DAT0 to AUXADC_DAT6, as it does in immediate mode.

There is a dedicated timer-triggered scheme for channel 0. This scheme is enabled by setting the SYN7 flag in the register AUXADC_CON2. The timing offset for this event is stored in the register TDMA_AUXEV0 in the TDMA timer. The sampled data triggered by this specific event is stored in the register AUXADC_DAT7. It is used to separate the results of two individual software routines that perform actions on the auxiliary ADC unit.

MTK Confidential Release for Konka

The AUTOCLR*n* in the register AUXADC_CON3 is set when it is intended to sample only once after setting timer-triggered mode. If AUTOCLR1 flag has been set, after the data for the channels in timer-triggered mode has been stored, the SYN*n* flags in the register AUXADC_CON0 are cleared. If AUTOCLR0 flag has been set, after the data for the channel 0 has been stored in the register AUXADC_DAT7, the SYN7 flag in the register AUXADC_CON2 is cleared.

The usage of the immediate mode and timer-triggered mode are mutually exclusive in terms of individual channels.

The PUWAIT_EN bit in the registers AUXADC_CON3 is used to power up the analog port in advance. This ensures that the power has ramped up to the stable state before A/D converter starts the conversion. The analog part is automatically powered down after the conversion is completed.

4.10.1 Register Definitions

AUXADC+0000h **Auxiliary ADC control register 0** **AUXADC_CON0**

Bit	15	14	13	12	11	10	9	8	7	6	5	4	3	2	1	0
Name										SYN6	SYN5	SYN4	SYN3	SYN2	SYN1	SYN0
Type										R/W	R/W	R/W	R/W	R/W	R/W	R/W
Reset										0	0	0	0	0	0	0

SYN*n* These 7 bits define whether the corresponding channel is sampled or not in timer-triggered mode. It is associated with timing offset register TDMA_AUXEV1. It supports multiple flags. The flags can be automatically cleared after those channel have been sampled if AUTOCLR1 in the register AUXADC_CON3 is set.

0 The channel is not selected.

1 The channel is selected.

AUXADC+0004h **Auxiliary ADC control register 1** **AUXADC_CON1**

Bit	15	14	13	12	11	10	9	8	7	6	5	4	3	2	1	0
Name										IMM6	IMM5	IMM4	IMM3	IMM2	IMM1	IMM0
Type										R/W	R/W	R/W	R/W	R/W	R/W	R/W
Reset										0	0	0	0	0	0	0

IMM*n* These 7 bits are set individually to sample the data for the corresponding channel. It supports multiple flags.

0 The channel is not selected.

1 The channel is selected.

AUXADC+0008h **Auxiliary ADC control register 2** **AUXADC_CON2**

Bit	15	14	13	12	11	10	9	8	7	6	5	4	3	2	1	0
Name																SYN7
Type																R/W
Reset																0

SYN7 This bit is used only for channel 0 and is to be associated with timing offset register TDMA_AUXEV0 in the TDMA timer in timer-triggered mode. The flag can be automatically cleared after channel 0 has been sampled if AUTOCLR0 in the register AUXADC_CON3 is set.

0 The channel is not selected.

1 The channel is selected.

MTK Confidential Release for Konka

AUXADC+0000Ch Auxiliary ADC control register 3 AUXADC_CON3

Bit	15	14	13	12	11	10	9	8	7	6	5	4	3	2	1	0
Name	AUTOSET				PUWAIT_EN		AUTOCLR1	AUTOCLR0								STA
Type	R/W				R/W		R/W	R/W								RO
Reset	0				0		0	0								0

AUTOSET This field defines the auto-sample mode of the module. In auto-sample mode, each channel with its sample register being read can start sampling immediately without configuring the control register AUXADC_CON1 again.

PUWAIT_EN Thus field enables the power warm-up period to ensure power stability before the SAR process takes place. It is recommended to activate this field.

- **0** The mode is not enabled.
- **1** The mode is enabled.

AUTOCLR1 The field defines the auto-clear mode of the module for event 1. In auto-clear mode, each timer-triggered channel gets samples of the specified channels once the SYN*n* bit in the register AUXADC_CON0 has been set. The SYN*n* bits are automatically cleared and the channel is not enabled again by the timer event except when the SYN*n* flags are set again.

- **0** The automatic clear mode is not enabled.
- **1** The automatic clear mode is enabled.

AUTOCLR0 The field defines the auto-clear mode of the module for event 0. In auto-clear mode, the timer-triggered channel 0 gets the sample once the SYN7 bit in the register AUXADC_CON2 has been set. The SYN7 bit is automatically cleared and the channel is not enabled again by the timer event 0 except when the SYN7 flag is set again.

- **0** The automatic clear mode is not enabled.
- **1** The automatic clear mode is enabled.

STA The field defines the state of the module.

- **0** This module is idle.
- **1** This module is busy.

AUXADC+0010h Auxiliary ADC channel 0 register AUXADC_DAT0

Bit	15	14	13	12	11	10	9	8	7	6	5	4	3	2	1	0
Name							DAT									
Type							RO									
Reset							0									

The register stores the sampled data for the channel 0. There are 8 registers of the same type for the corresponding channel . The overall register definition is listed in **Table 30**.

Register Address	Register Function	Acronym
AUXADC+0010h	Auxiliary ADC channel 0 data register	AUXADC_DAT0
AUXADC+0014h	Auxiliary ADC channel 1 data register	AUXADC_DAT1
AUXADC+0018h	Auxiliary ADC channel 2 data register	AUXADC_DAT2
AUXADC+001Ch	Auxiliary ADC channel 3 data register	AUXADC_DAT3
AUXADC+0020h	Auxiliary ADC channel 4 data register	AUXADC_DAT4
AUXADC+0024h	Auxiliary ADC channel 5 data register	AUXADC_DAT5

MTK Confidential Release for Konka

AUXADC+0028h	Auxiliary ADC channel 6 data register	AUXADC_DAT6
AUXADC+002Ch	Auxiliary ADC channel 0 data register for TDMA event 0	AUXADC_DAT7

Table 30 Auxiliary ADC data register list

4.11 SCCB

4.11.1 General Description

SCCB (Serial Camera Control Bus) is a two-wire serial interface for camera control usage. The two signals are SIO_CK and SIO_DAT. SIO_CK is a single-direction, active-high clock signal that must be driven by the master. SIO_DAT is a bi-directional data signal that can be driven by either the master or the slave.

Within the transmission, two situations are defined as the START and STOP conditions. A HIGH to LOW transition on the SIO_DAT line while SIO_CK is high indicates a START condition. A LOW to HIGH transition on the SIO_DAT line while SIO_CK is high indicates a STOP condition. The master generates START and STOP conditions when it initiates or terminates a transmission.

For SCCB, there are 3 kinds of transmissions: 3-phase write transmission, 2-phase write transmission, and 2-phase read transmission cycle. A phase contains 9 bits: an 8-bit sequential data transmission followed by a 9th bit. The 9th bit is a Do not-Care bit or an NA bit, depending on whether the transmission is a write or read phase. The 3-phase write transmission cycle is a full write cycle and the master can write one byte of data to a specific slave. The content of a 3-phase write transmission cycle is displayed in Figure 50. The ID address indicates the specific slave that the master wants to access. The sub address is the location of the destination register. The purpose of a 2-phase write transmission cycle is to identify the sub-address of the specific slave the master intends to access; it is always followed by a 2-phase read transmission cycle, which has no ability to identify the sub-address. The structure of 2-phase write transmission cycle and 2-phase read transmission cycle are depicted in Figure 51 and Figure 52**,** respectively.

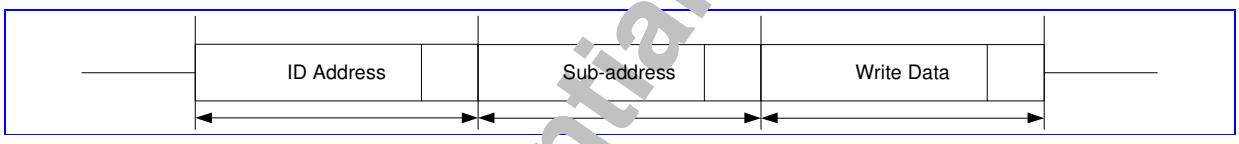

Figure 50 SCCB 3-phase write transmission cycle

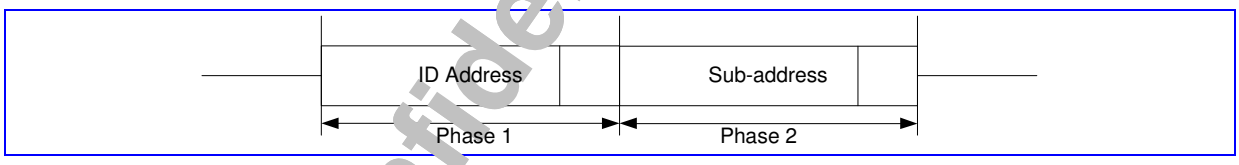

Figure 51 SCCB 2-phase write transmission cycle

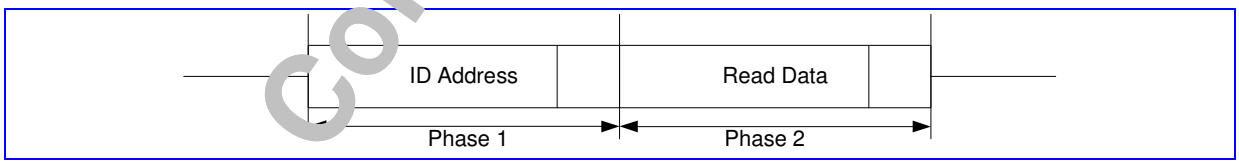

Figure 52 SCCB 2-phase read transmission cycle

4.11.2 Register Definitions

SCCB+0000h SCCB Control Register CTRL

Bit	15	14	13	12	11	10	9	8	7	6	5	4	3	2	1	0

MTK Confidential Release for Konka

Name																SCCB_EN
Type																R/W
Reset																0

SCCB_EN This bit is used to enable SCCB. The bit must be accessed when SCCB wants to communicate with the slave, i.e. generates write or read transmission cycles.

SCCB+0008h SCCB Data Length Register DAT_LEN

Bit	15	14	13	12	11	10	9	8	7	6	5	4	3	2	1	0
Name													DAT_LEN			
Type													R/W			
Reset													0			

DAT_LEN This field indicates the transmission length minus 1, i.e. to set DAT_LEN = 1 for 2-phase transmission and to sets DAT_LEN = 2 for 3-phase transmission.

SCCB+000Ch SCCB Buffer Time Register TBUF

Bit	15	14	13	12	11	10	9	8	7	6	5	4	3	2	1	0
Name													TBUF			
Type													R/W			
Reset													3Eh			

TBUF For SCCB, the master initiates transmission with a START condition, and ends the transmission by sending a STOP condition. TBUF indicates the bus free time between a STOP and START condition, i.e. the interval of the STOP and START conditions. Based on a 13 MHz clock frequency, the SCCB buffer time = (TBUF / 13000000), and the default setting is ~4.7us.

SCCB+0010h SCCB Start Hold Time THDSTA

Bit	15	14	13	12	11	10	9	8	7	6	5	4	3	2	1	0
Name													THDSTA			
Type													R/W			
Reset													34h			

THDSTA START condition occurs when there is a HIGH to LOW transition on the SIO_DAT line while SIO_CK is HIGH. The START hold time indicates that SIO_CK should be HIGH at least THDSTA length of time after SIO_DAT becomes LOW. Based on a 13 MHz frequency, the SCCB start hold time = (THDSTA / 13000000), and the default setting is ~4us.

SCCB+0014h SCCB Data Hold Time THDDAT

Bit	15	14	13	12	11	10	9	8	7	6	5	4	3	2	1	0
Name													THDDAT			
Type													R/W			
Reset													27h			

THDDAT Since SCCB data can be changed only when SIO_CK is LOW, a data hold time is defined to indicate the time interval that data cannot be changed after SIO_CK becomes LOW. Based on 13 MHz frequency, SCCB data hold time = (THDDAT / 13000000), and the default setting is ~3us.

SCCB+0018h SCCB TLOW TLOW

Bit	15	14	13	12	11	10	9	8	7	6	5	4	3	2	1	0
Name													TLOW			
Type													R/W			
Reset													46h			

MTK Confidential Release for Konka

TLOW This field indicates the low period of serial clock. Combined with THIGH, the SIO_CK duty is adjustable. Based on a 13MHz frequency, the SIO_CK low period = (TLOW / 13000000), and the default setting is ~5.3us.

SCCB+001Ch SCCB THIGH — THIGH

Bit	15	14	13	12	11	10	9	8	7	6	5	4	3	2	1	0
Name										THIGH						
Type										R/W						
Reset										3Ch						

THIGH This field indicates the high period of serial clock. Combined with TLOW, the SIO_CK duty is adjustable. Based on a 13 MHz frequency, the SIO_CK high period = (THIGH / 13000000), and the default setting is ~4.6us.

SCCB+0020h SCCB Data Register — DATA

Bit	15	14	13	12	11	10	9	8	7	6	5	4	3	2	1	0
Name								DATA								
Type								R/W								
Reset								0								

DATA SCCB write data. DATA[8] indicates whether or not the following 8bits is an ID address. If the word is an ID address, the write or read information is hidden in DATA[0].

DATA[8] **0** The following 8-bits is a sub address or pure data.

1 The following 8-bits is an ID address field.

DATA[0]

0 When DATA [8] = 1, the data is an ID address.

DATA [0] = 0, a write cycle

DATA [0] = 1, a read cycle

1 When DATA [8] = 0, the data is not an ID address; it may be a sub address or pure data.

SCCB+0028h SCCB STOP Setup Time — TSUSTO

Bit	15	14	13	12	11	10	9	8	7	6	5	4	3	2	1	0
Name											TSUSTO					
Type											R/W					
Reset											34h					

TSUSTO A LOW to HIGH transition on the SIO_DAT line while SIO_CK is high indicates a STOP condition. For a STOP condition, the LOW to HIGH transition on the SIO_DAT can be generated after SCCB STOP setup time while SIO_CK must be HIGH. Based on a 13 MHz frequency, SCCB STOP setup time = (TSUSTOP / 13000000), and the default setting is ~4us.

SCCB+0038h SCCB MODE — MODE

Bit	15	14	13	12	11	10	9	8	7	6	5	4	3	2	1	0
Name																MODE
Type																R/W
Reset																0

MODE This bit indicates the SCCB operating mode

0 To operate as Slave

1 To operate as Master

SCCB+003Ch SCCB Buf Clear — BUF_CLEAR

Bit	15	14	13	12	11	10	9	8	7	6	5	4	3	2	1	0

MTK Confidential Release for Konka

Name																BUF_CLEAR
Type																R/W
Reset																0

BUF_CLEAR Buffer clear bit. Set this bit to clear the SCCB FIFO.

- **0** Buffer is not cleared.
- **1** Clear the buffer.

SCCB+0040h SCCB Status Register STA

Bit	15	14	13	12	11	10	9	8	7	6	5	4	3	2	1	0
Name															WRITE	READ
Type															R/W	R/W
Reset															0	0

READ Indicates the read is complete.

- **0** Read command is not finished.
- **1** Read command is finished.

WRITE Indicates the write is complete.

- **0** Write command is not finished.
- **1** Write command is finished.

SCCB+0044h SCCB Read Data Register READ_DATA

Bit	15	14	13	12	11	10	9	8	7	6	5	4	3	2	1	0
Name									READ_DATA							
Type									RO							
Reset									0							

READ_DATA The returned read data from slave.

4.12 Cipher Hash Engine

4.12.1 General Description

The Cipher and Hash Engine (CHE) and Secure Booting module is responsible for security functions in the MT6228 that are essential for applications such as M-Payment, WAP, WIM, banking communication, and Digital Rights Management. The hardware support allows for lower complexity and higher efficiency. The architecture is based on Direct Memory Access (DMA) without a word-alignment constraint, increasing its flexibility for users.

For the cipher and decipher functions, CHE supports Advanced Encryption Standard (AES), Data Encryption Standard (DES), and Triple-DES (**Figure 53**). These standards are used for both Electronic Codebook mode (**Figure 54**) and Cipher Block Chaining mode (**Figure 55**). The cipher and decipher functions are symmetric functions: the same key is used for both encryption and decryption. They are block-based algorithms: AES operates on a block size of 16 bytes and 3DES/DES on a block size of 8 bytes. The lengths of the cipher text and the plain text are typically the same if the original length is a multiple of the block size. CHE supports all AES key lengths: 128, 192, 256 bits. Under certain conditions, the decoding speed can be comparable to encoding speed. Write-only key registers are given higher security level for use. The user can keep the cipher-text of raw keys and discard original keys to prevent peepers.

MTK Confidential Release for Konka

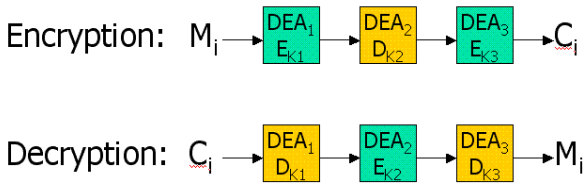

Figure 53 3DES Function

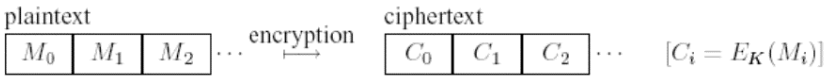

Figure 54 ECB Mode

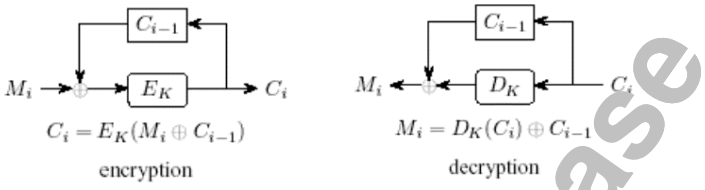

Figure 55 CBC Mode

For the hash function, CHE supports both Message Digest 5 (MD5 in RFC 1321) and US Secure Hash Algorithm 1 (SHA-1 in RFC 3174). The hash function is a one-way function: a message is converted into a fixed-length string of digits. MD5 is a 128-bit message digest, and SHA-1 is 160-bit. They are very similar functions such that resources sharing can be applied in CHE.

A new Save and Resume feature is implemented in CHE. Because only one task can be applied on CHE at any given time, unfinished jobs can be saved to the assigned memory addresses until the source data is ready again.

Register Definitions

Register Address	Register Function	Acronym
CHE + 0000h	CHE start register	**CHE_START**
CHE + 0004h	CHE control register	**CHE_CON**
CHE + 0008h	CHE key0/key4/initial vector 0/source memory address	**CHE_IN0**
CHE + 000ch	CHE key1/key5/initial vector 1/destination memory address	**CHE_IN1**
CHE + 0010h	CHE key2/key6/initial vector 2/data length	**CHE_IN2**
CHE + 0014h	CHE key3/key7/initial vector 3/state memory address	**CHE_IN3**
CHE + 0018h	CHE slow down rate	**CHE_SDRAT**
CHE + 001ch	CHE pad count	**CHE_PCNT**
CHE + 0020h	CHE status	**CHE_STAT**
CHE + 0024h	CHE current destination address	**CHE_CDES**
CHE + 0028h	CHE interrupt status	**CHE_INTSTA**
CHE + 002ch	CHE interrupt enable	**CHE_INTEN**
CHE + 00c0h	CHE Secure Booting control	**CHE_BCON**
CHE + 00c4h	CHE Secure Booting source data	**CHE_BSRC**
CHE + 00c8h	CHE Secure Booting seed data	**CHE_BSEED**
CHE + 00cch	CHE Secure Booting encrypted data	**CHE_BENC**
CHE + 00d0h	CHE Secure Booting decrypted data	**CHE_BDEC**

MTK Confidential Release for Konka

Table 31 CHE Registers

CHE+0000h CHE start register CHE_START

Bit	15	14	13	12	11	10	9	8	7	6	5	4	3	2	1	0
Name			UPK67	UPK45	UPK23	UPK01	UPIV23	UPIV01	RKEY	WKEY	UPDES	CLEAR	RSTAT	WSTAT	LAST	ST/UD
Type			R/W	R/W	R/W	R/W	R/W	R/W	R/W	R/W	R/W	R/W	R/W	R/W	R/W	R/W
Reset			0	0	0	0	0	0	0	0	0	0	0	0	0	0

Start register for CHE.

ST/UD This bit means **Start** (1) / **!Update** (0).
When the ST/UD bit is asserted, CHE enters **NORMAL mode** and performs the job pre-defined according to the bit settings of LAST, WSTAT, RSTAT, UPDES, WKEY, RKEY and register CHE_CON. This bit must be de-asserted after the current operation finished. **Note: CHE only starts when the CHE_CON control register ATYPE is 111 (Reserved); otherwise, CHE ends immediately and returns an error.**
When ST/UD is de-asserted, CHE enters **UPDATE mode**. It depends on the UPIV01, UPIV23, UPK01, UPK23, UPK45 and UPK67 to update the corresponding Initial Vectors (IV0~3) and cipher or decipher keys 0~7 in symmetric ciphering or deciphering mode. It's suggested that writing 0x0000 into START immediately before other operations.

LAST This bit indicates the last section for this process. If this bit is asserted, CHE finishes the current process and resets to the initial state.
In ciphering mode, CHE outputs the last result (including padding process operation).
In deciphering mode, CHE outputs the last result and updates CHE_PCNT.
In hashing mode, CHE pads and outputs the digest.

WSTAT Write CHE states after this operation completed. CHE needs 120 bytes of space for each state to write to address CHE_SADDR (CHE_IN3). The state can be read back by asserting RSTAT.

RSTAT Read states before the start of the operation. CHE reads 120 bytes back from address CHE_SADDR (CHE_IN3). The states can be written beforehand by asserting WSTAT.

CLEAR Reset all states and return to the initial state. To perform a clear operation, write 0x0010 to CHE_START, then write 0x0000 to CHE_START immediately (in the next instruction cycle) to return to the idle mode. **The clear operation has the highest priority of all. If this operation starts with RSTAT disabled, the user is recommended to clear CHE. The user is highly recommended to clear CHE if this operation starts without RSTAT enabled.**

UPDES Force an update for CHE_DES (CHE_IN1). CHE automatically updates CHE_DES under two conditions only: the first operation after a reset or a last operation. The user can force CHE to update the destination address by asserting UPDES. When this bit is enabled, CHE does not update the destination address when RSTAT is enabled.

WKEY Write key values into encrypted form. To encrypt the key after writing CHE_KEY0~ 7 (CHE_IN0~3), write 0x0041 to CHE_START. Wait for the OK state before writing 0x0000 to CHE_START to return to idle mode. The keys are stored in encrypted form; the user cannot recover the plain text key, only restore the encrypted key to CHE by asserting RKEY.
This operation needs 36 bytes of buffer space and uses SADDR as a target address. The WKEY process does not affect the contents of the KEY registers in CHE. WKEY and RKEY override the NORMAL mode operation for CHE; WKEY has higher priority than RKEY.

RKEY Restore the key values back to CHE. To retrieve a previously stored key (36 bytes), write 0x0081 to CHE_START. Wait for the OK state before writing 0x0000 to CHE_START to return to the idle mode. The keys can be stored by asserting WKEY.

UPIV01 Update CHE_IV0 from CHE_IN0 and CHE_IV1 from CHE_IN1 in UPDATE mode.

UPIV23 Update CHE_IV2 from CHE_IN2 and CHE_IV3 from CHE_IN3 in UPDATE mode.

MTK Confidential Release for Konka

UPK01 Update CHE_KEY0&1 from CHE_IN0 and CHE_IV1 in UPDATE mode.
UPK23 Update CHE_KEY2&3 from CHE_IN2 and CHE_IV3 in UPDATE mode.
UPK45 Update CHE_KEY4&5 from CHE_IN0 and CHE_IV1 in UPDATE mode.
UPK67 Update CHE_KEY6&7 from CHE_IN2 and CHE_IV3 in UPDATE mode.

CHE+0004h CHE control register CHE_CON

Bit	15	14	13	12	11	10	9	8	7	6	5	4	3	2	1	0
Name												**SMODE**	**CIPHER**	**ATYPE**		
Type												R/W	R/W	R/W		
Reset												0	0	000		

Control register for CHE.

ATYPE Cipher Hash algorithm type: 000=MD5, 001=SHA-1, 010=DES, 011=3-DES, 100=AES-128, 101=AES-192, 110=AES-256. 111=Reserved.

CIPHER 0=Decipher mode, 1=Cipher mode.

SMODE 0=ECB mode, 1=CBC mode. For CBC mode, load the initialization vectors (IV) beforehand.

CHE+0008h CHE key0/key4/initial vector 0/source address CHE_IN0

Bit	31	30	29	28	27	26	25	24	23	22	21	20	19	18	17	16
Name	**IN0[31:16]**															
Type	R/W															
Reset	0															
Bit	15	14	13	12	11	10	9	8	7	6	5	4	3	2	1	0
Name	**IN0[15:0]**															
Type	R/W															
Reset	0															

IN0 Temporary buffer to load the CHE internal registers: KEY0, KEY4, IV0 and SRC. Which registers are loaded depends on CHE_START: in UPDATE mode, KEY0, KEY4, IV0 are loaded; in NORMAL mode, SRC is loaded.

KEY0 When CHE is in UPDATE mode and the UPK01 bit is enabled, the content of IN0 is copied into the internal KEY0 registers. CHE stores 8 KEYs, KEY0~KEY7. Different algorithms use different KEYs. AES-128: [0,1,2,3]; AES-192: [0,1,2,3,4,5]; AES-256: [0,1,2,3,4,5,6,7]; DES: [0,1]; 3-DES encryption: [0,1]→[2,3]→[4,5]; and 3-DES decryption: [4,5]→[2,3]→[0,1].

KEY4 When CHE is in UPDATE mode and UPK45 is enabled, the content of IN0 is copied into the internal KEY4 registers.

IV0 When CHE is in UPDATE mode and UPIV01 is enabled, the content of IN0 is copied into the internal IV0 registers. DES/3DES uses a 64-bit initial vector [IV0,IV1] in CBC mode. AES uses a 128-bit initial vector [IV0,IV1,IV2,IV3] in CBC mode.

SRC When CHE is in NORMAL mode, the content of IN0 is copied into internal SRC registers. SRC is the source address for CHE operation.

CHE+000ch CHE key1/key5/initial vector 1/destination address CHE_IN1

Bit	31	30	29	28	27	26	25	24	23	22	21	20	19	18	17	16
Name	**IN1[31:16]**															
Type	R/W															
Reset	0															
Bit	15	14	13	12	11	10	9	8	7	6	5	4	3	2	1	0
Name	**IN1[15:0]**															
Type	R/W															
Reset	0															

MTK Confidential Release for Konka

IN1 Temporary buffer to load the CHE internal registers: KEY1, KEY5, IV1 and DES. Which registers are loaded depends on CHE_START: in UPDATE mode, KEY1, KEY5, IV1 are loaded; in NORMAL mode, DES is loaded.

KEY1 When CHE is in UPDATE mode and UPK01 is enabled, the content of IN1 is copied into the internal KEY1 registers.

KEY5 When CHE is in UPDATE mode and UPK45 is enabled, the content of IN1 is copied into the internal KEY5 registers.

IV1 When CHE is in UPDATE mode and UPIV01 is enabled, the content of IN1 is copied into the internal IV1 registers.

DES When CHE is in NORMAL mode, the content of IN1 is copied into internal DES if UPDES is asserted or if this operation immediately follows a reset or a last operation. DES is the destination address for a CHE operation.

Info: About the destination buffer length:
In ciphering mode, the destination buffer length must be larger than the source data length.

$$len_des_{cipher} = len_src_{cipher} + BLOCK_SIZE - (len_src_{cipher} \% BLOCK_SIZE)$$

In deciphering mode, the destination data length is the same as the source data length, a multiple of BLOCK_SIZE.
In hash mode, the destination buffer length is 16 bytes in MD5 mode and 20 bytes in SHA-1 mode.
BLOCK_SIZE is 8 bytes in DES (3-DES) mode and 16 bytes in AES mode.

CHE+0010h CHE key2/key6/initial vector 2/operation length CHE_IN2

Bit	31	30	29	28	27	26	25	24	23	22	21	20	19	18	17	16
Name	**IN2[31:16]**															
Type	R/W															
Reset	0															
Bit	15	14	13	12	11	10	9	8	7	6	5	4	3	2	1	0
Name	**IN2[15:0]**															
Type	R/W															
Reset	0															

IN2 Temporary buffer to load the CHE internal registers: KEY2, KEY6, IV2 and LEN. Which registers are loaded in depends on CHE_START: in UPDATE mode, KEY2, KEY6, IV2 are loaded; in NORMAL move, LEN is loaded.

KEY2 When CHE is in UPDATE mode and UPK23 is enabled, the content of IN2 is copied into the internal KEY2 registers.

KEY6 When CHE is in UPDATE mode and UPK67 is enabled, the content of IN2 is copied into the internal KEY6 registers.

IV2 When CHE is in UPDATE mode and UPIV23 is enabled, the content of IN2 is copied into the internal IV2 registers.

LEN When CHE is in NORMAL mode, the content of IN2 is copied into the internal LEN registers. LEN is the length for the CHE operation. A zero length is allowed only in a last operation (LAST asserted); avoid using a zero length if possible. If a zero-length setting is unavoidable, clear the CHE after this operation. If a zero length is used in ciphering mode, the corresponding padded cipher text would be output. In deciphering mode, CHE resets. Both of them are regardless of previous ciphering or deciphering operations.
In hash mode, if there are previous hash operations, CHE resets. Otherwise, the digest of zero length is output. I.e., MD5 outputs “d41d8cd98f00b204e9800998ecf8427e” and SHA1 outputs “da39a3ee5e6b4b0d3255bfef95601890afd80709".

MTK Confidential Release for Konka

CHE+0014h CHE key3/key7/initial vector 3/state address CHE_IN3

Bit	31	30	29	28	27	26	25	24	23	22	21	20	19	18	17	16
Name	IN3[31:16]															
Type	R/W															
Reset	0															
Bit	15	14	13	12	11	10	9	8	7	6	5	4	3	2	1	0
Name	IN3[15:0]															
Type	R/W															
Reset	0															

IN3 Temporary buffer to load the CHE internal registers: KEY3, KEY7, IV3 and SADDR. Which registers are loaded depends on CHE_START: in UPDATE mode, KEY3, KEY7, IV3 are loaded; in NORMAL mode, SADDR is loaded.

KEY3 When CHE is in UPDATE mode and UPK23 is enabled, the content of IN3 is copied into internal KEY3 registers.

KEY7 When CHE is in UPDATE mode and UPK67 is enabled, the content of IN3 is copied into internal KEY7 registers.

IV3 When CHE is in UPDATE mode and UPIV23 is enabled, the content of IN3 is copied into internal IV3 registers.

SADDR When CHE is in NORMAL mode, the content of IN3 is copied into the internal SADDR registers. SADDR is the state/KEY address for the CHE operation. If RSTAT or WSTAT is asserted, CHE treats SADDR as a state address, and reads or writes 120 bytes from or to this address. If RKEY or WKEY is asserted, CHE reads or stores 36-byte KEYs from or to SADDR. Note: SADDR must 4-byte aligned.

CHE+0018h CHE slow down rate CHE_SDRAT

Bit	15	14	13	12	11	10	9	8	7	6	5	4	3	2	1	0
Name									SDRAT							
Type									R/W							
Reset									0							

SDRAT Slow down CHE to prevent too many requests for AHB resources. Each unit increment translates into a 4-cycle delay for each bus access (read or write). The range of SDRAT is from 0 (no delay) to 255 (255*4=1020 cycles' delay).

CHE+001ch CHE pad count CHE_PCNT

Bit	15	14	13	12	11	10	9	8	7	6	5	4	3	2	1	0
Name												PCNT				
Type												RO				
Reset												0				

PCNT When performing symmetric deciphering, this register indicates the padding length.

CHE+0020h CHE return status CHE_STAT

Bit	15	14	13	12	11	10	9	8	7	6	5	4	3	2	1	0
Name														STAT		
Type														RO		
Reset														0		

STAT STAT represents the current state of CHE. 000b: OK. 001b: control field setting error. 010b: zero length for a non-last operation, or a last operation that is not hash nor ciphering (a last operation that is deciphering). 011b: resume state, wait for the next last or non-last operation. 100b: BUSY. 101b: RKEY and WKEY at the same time.

CHE+0024h CHE current destination address CHE_CDES

Bit	31	30	29	28	27	26	25	24	23	22	21	20	19	18	17	16
Name	CDES[31:16]															

MTK Confidential Release for Konka

Type	RO															
Reset	0															
Bit	15	14	13	12	11	10	9	8	7	6	5	4	3	2	1	0
Name	**CDES[15:0]**															
Type	RO															
Reset	0															

CDES CDES is the current destination address in CHE.

CHE+0028h CHE interrupt status CHE_INTSTA

Bit	15	14	13	12	11	10	9	8	7	6	5	4	3	2	1	0
Name															**INTSTA**	
Type															RC	
Reset															0	

INTSTA Interrupt status. Bit 0 indicates CHE finished in the OK or RESUME state. Bit 1 indicates CHE returned a failure. Further information can be obtained from CHE_STAT.

CHE+002ch CHE interrupt enable CHE_INTEN

Bit	15	14	13	12	11	10	9	8	7	6	5	4	3	2	1	0
Name															**INTEN**	
Type															R/W	
Reset															0	

INTEN Interrupt enable control register. When bit 0 is enabled, an interrupt occurs when CHE finishes in the OK or RESUME state. If bit 1 is enabled, CHE interrupts if an error occurs.

CHE+00c0h CHE Secure Booting control CHE_BCON

Bit	15	14	13	12	11	10	9	8	7	6	5	4	3	2	1	0
Name													**PAR3**	**PAR2**	**PAR1**	**DIS**
Type													R/W	R/W	R/W	R/W
Reset													0	0	0	0

DIS Disable Secure Booting function. When DIS is asserted, the data read from CHE_BENC and CHE_BDEC is the same as CHE_BSRC.

PAR1 Use inner information parameter 1 (SK) to strengthen security.

PAR2 Use inner information parameter 2 (RS) to strengthen security.

PAR3 Use inner information parameter 3 (MR) to strengthen security.

CHE+00c4h CHE Secure Booting source data CHE_BSRC

Bit	31	30	29	28	27	26	25	24	23	22	21	20	19	18	17	16
Name	**BSRC[31:16]**															
Type	WO															
Reset	0															
Bit	15	14	13	12	11	10	9	8	7	6	5	4	3	2	1	0
Name	**BSRC[15:0]**															
Type	WO															
Reset	0															

BSRC Source data for Secure Booting to be encrypted (obtained from CHE_BENC) or decrypted (obtained from CHE_BDEC).

CHE+00c8h CHE Secure Booting seed value CHE_BSEED

Bit	31	30	29	28	27	26	25	24	23	22	21	20	19	18	17	16
Name	**BSEED[31:16]**															
Type	WO															
Reset	0															
Bit	15	14	13	12	11	10	9	8	7	6	5	4	3	2	1	0
Name	**BSEED[15:0]**															
Type	WO															
Reset	0															

MTK Confidential Release for Konka

BSEED Seed data needed to increase security of the Boot Secure function. Set the seed value before performing Boot Secure the first time.

CHE+00cch CHE Secure Booting encrypted data CHE_BENC

Bit	31	30	29	28	27	26	25	24	23	22	21	20	19	18	17	16
Name	BENC[31:16]															
Type	RO															
Reset	0															
Bit	15	14	13	12	11	10	9	8	7	6	5	4	3	2	1	0
Name	BENC[15:0]															
Type	RO															
Reset	0															

BENC Encrypted data from CHE_BSRC.

CHE+00d0h CHE Secure Booting decrypted data CHE_BDEC

Bit	31	30	29	28	27	26	25	24	23	22	21	20	19	18	17	16
Name	BDEC[31:16]															
Type	RO															
Reset	0															
Bit	15	14	13	12	11	10	9	8	7	6	5	4	3	2	1	0
Name	BDEC[15:0]															
Type	RO															
Reset	0															

BDEC Decrypted data from CHE_BSRC.

4.12.2 CHE KEY Phase Transient

In CHE, all cipher and decipher functions need a KEY, i.e., AES, DES, 3DES. However, due to the cost and performance concern, all the keys are put together in a KEY buffer with four phases (**Figure 56**).

1. Phase 1: AES128 decipher phase.
2. Phase 2: AES192 decipher phase
3. Phase 3: AES256 decipher phase.
4. Phase 4: Common phase, other functions which exclude the AES decipher. I.e., DES (cipher and decipher), 3DES (cipher and decipher), AES128, AES192, AES256 cipher.

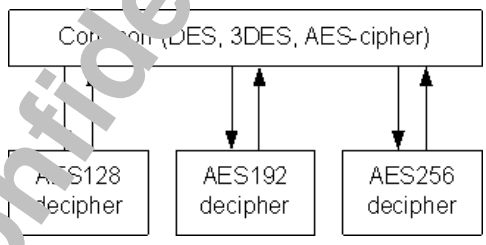

Figure 56 Key Phase Transient GraphPhases 1 through 3 are internal phases, unknown to the user. When the user first enters the key data, the key phase is reset to the Common Phase. Transition among phases is limited to the arrows shown in **Figure 56**. For example, if currently performing a 3DES cipher function, any cipher or decipher function may follow. If currently using a AES192 decipher function, only the AES192 decipher function or the Common Phase algorithms may be used next; otherwise an error occurs.

For security reasons and convenience, the key phase can be saved with key contents by WKEY or WSTAT. The user is highly recommended to convert raw key data into CKEY data format (using WKEY), discard the original key data, and to use CKEY by RKEY.

MTK Confidential Release for Konka

4.12.3 Secure Booting Procedure

Secure Booting is a feature of CHE that protects the program contents on flash memory from modification, skip or hard copy. With a secure process and a unique chip ID (UID), CHE can encrypt or decrypt a segment of instruction data in order.

Encryption procedure:

1. Activate the eFuse module.
2. Write the seed value into BSEED. The seed value can be any 32-bit value. The same seed value is necessary in the decryption procedure.
3. Write the control value into BCON.
4. Write source data (instruction) into BSRC and read the cipher text from BENC.
5. Repeat step 4 until all instructions are encrypted.

Decryption procedure:

1. Activate the eFuse module.
2. Write the seed value into BSEED. The seed value must be the same one used in the encryption procedure.
3. Write the control value into BCON. The control value must be the same one used in the encryption procedure.
4. Write the source data (instruction) into BSRC and read the plain text from BDEC.
5. Repeat step 4 until all instructions are decrypted.

Notes:

1. A bit length equal or less than 32 bits is acceptable for Secure Boot. E.g.: a 16-bit data 0x1234 is treated as 0x12340000 32-bit data and decrypted in the same manner.
2. For security reasons, access times to be encrypted or decrypted should not be the multiples of 4.
3. The internal states of Secure Booting function change under the following conditions, such that redundant register access is forbidden.
   - Write data into BSRC
   - Write data into BSEED
   - Read data from BENC or BDEC

As an example of the encryption and decryption of 16-bit data, consider the value 0xabcd:

Encryption:

1. The data is padded with zeros to obtain a 32-bit value: 0xabcd0000.
2. The encryption operation produces a value 0x12345678.

Decryption:

1. Only the most significant 16 bits 0x1234000 are considered and decrypted as 0xabcd7893.
2. The first 16 bits 0xabcd are retained, and 0x00007893 is ignored.

MTK Confidential Release for Konka

5 Microcontroller Coprocessors

Microcontroller Coprocessors are designed to run computing-intensive processes in place of the Microcontroller (MCU). These coprocessors especially target timing critical GSM/GPRS Modem processes that require fast response and large data movement. Controls to the coprocessors are all through memory access via the APB.

5.1 Divider

To ease the processing load of the MCU, a divider is employed. The divider can perform signed and unsigned 32bit/32bit division, as well as modulus. The processing time of the divider is from 1 clock cycle to 33 clock cycles, depending on the magnitude of the dividend. Detailed processing times are listed below in **Table 32**. **Table 32** shows two processing times (except for when the dividend is zero) for each range of dividends, depending on whether or not restoration is required during the last step of the division operation.

Table 32 Processing Time for Different Dividend Values

Signed Division		Unsigned Division	
Dividend	**Clock Cycles**	**Dividend**	**Clock Cycles**
0000_0000h	1	0000_0000h	1
0000_00ffh – (-0000_0100h), excluding 0x0000_0000	8 or 9	0000_0001h – 0000_00ffh	8 or 9
0000_ffffh – (-0001_0000h)	16 or 17	0000_0100h – 0000_ffffh	16 or 17
00ff_ffffh – (-0100_0000h)	24 or 25	0001_0000h – 00ff_ffffh	24 or 25
7fff_ffffh – (-8000_0000h)	32 or 33	0100_0000h – ffff_ffffh	32 or 33

Table 33 Processing Time for Different Dividend Values

When the divider is started by setting the Divider Control Register START bit to 1, DIV_RDY becomes 0; this bit is asserted when the division process is complete. MCU detects this status bit by polling it to know the correct access timing. To simplify polling, only the value of register DIV_RDY is visible while Divider Control Register is being read. Hence, MCU does not need to mask other bits to extract the value of DIV_RDY.

In a GSM/GPRS system, many divisions are executed with constant divisors. Therefore, oft-used constants are stored in the divider to speed up the process. By controlling control bits IS_CNST and CNST_IDX in Divider Control register, a division can be performed without providing a divisor. This omission of a step saves on the time for writing a divisor in and on the instruction fetch time, thus making the process more efficient.

5.1.1 Register Definitions

DIVIDER+0000h **Divider Control Register** **DIV_CON**

Bit	31	30	29	28	27	26	25	24	23	22	21	20	19	18	17	16
Name														CNST_IDX		
Type														WO		
Reset														0		
Bit	15	14	13	12	11	10	9	8	7	6	5	4	3	2	1	0
Name											IN_CNST	SIGN			DIV_RDY	START

MTK Confidential Release for Konka

Type											WO	WO			RO	WO
Reset											0	1			1	0

START Starts a division operation. Returns to 0 after the division has started.

DIV_RDY Current status of the divider. Note that when DIV_CON register is read, only the value of DIV_RDY appears; the program does not need to mask other parts of the register to extract the information in DIV_RDY.

0 Division is in progress.

1 Division is finished

SIGN Indicates a signed or unsigned division operation.

0 Unsigned division

1 Signed division

IS_CNST Specifies that an internal constant value should be used as a divisor. If IS_CNST is enabled, the divisor value need not be written, and divider automatically uses the internal constant value instead. The internal constant value used depends on the value of CNST_IDX.

0 Normal division. Divisor is written in via APB.

1 Using internal constant divisor instead.

CNST_IDX Index of constant divisor.

0 divisor = 13

1 divisor = 26

2 divisor = 51

3 divisor = 52

4 divisor = 102

5 divisor = 104

DIVIDER +0004h Divider Dividend register DIV_DIVIDEND

Bit	31	30	29	28	27	26	25	24	23	22	21	20	19	18	17	16
Name	DIVIDEND[31:16]															
Type	WO															
Reset	0															
Bit	15	14	13	12	11	10	9	8	7	6	5	4	3	2	1	0
Name	DIVIDEND[15:0]															
Type	WO															
Reset	0															

Dividend.

DIVIDER +0008h Divider Divisor register DIV_DIVISOR

Bit	31	30	29	28	27	26	25	24	23	22	21	20	19	18	17	16
Name	DIVISOR[31:16]															
Type	WO															
Reset	0															
Bit	15	14	13	12	11	10	9	8	7	6	5	4	3	2	1	0
Name	DIVISOR[15:0]															
Type	WO															
Reset	0															

Divisor.

MTK Confidential Release for Konka

DIVIDER +000Ch **Divider Quotient register** **DIV_QUOTIENT**

Bit	31	30	29	28	27	26	25	24	23	22	21	20	19	18	17	16
Name	QUOTIENT[31:16]															
Type	RO															
Reset	0															
Bit	15	14	13	12	11	10	9	8	7	6	5	4	3	2	1	0
Name	QUOTIENT[15:0]															
Type	RO															
Reset	0															

Quotient.

DIVIDER +0010h **Divider Remainder register** **DIV_REMAINDER**

Bit	31	30	29	28	27	26	25	24	23	22	21	20	19	18	17	16
Name	REMAINDER[31:16]															
Type	RO															
Reset	0															
Bit	15	14	13	12	11	10	9	8	7	6	5	4	3	2	1	0
Name	REMAINDER[15:0]															
Type	RO															
Reset	0															

Remainder.

5.2 CSD Accelerator

5.2.1 General Description

This unit performs the data format conversion of RA0, RA1, and FAX in CSD service. CSD service consists of two major functions: data flow throttling and data format conversion. The data format conversion is a bit-wise operation and requires several instructions to complete a conversion, thus making it inefficient for the MCU to perform itself. A coprocessor, CSD accelerator, is designed to reduce the computing power needed to perform this function.

The CSD accelerator helps in converting data format only; the data flow throttling function is still implemented by the MCU. CSD accelerator performs three types of data format conversion: RA0, RA1, and FAX.

For RA0 conversion, too many case scenarios for the downlink path conversion greatly increase the hardware area cost, thus only uplink RA0 data format conversion is provided. Uplink RA0 conversion consists of inserting a start bit before and a stop bit after each a byte, for a duration of 16 bytes. illustrates the detailed conversion table.

MTK Confidential Release for Konka

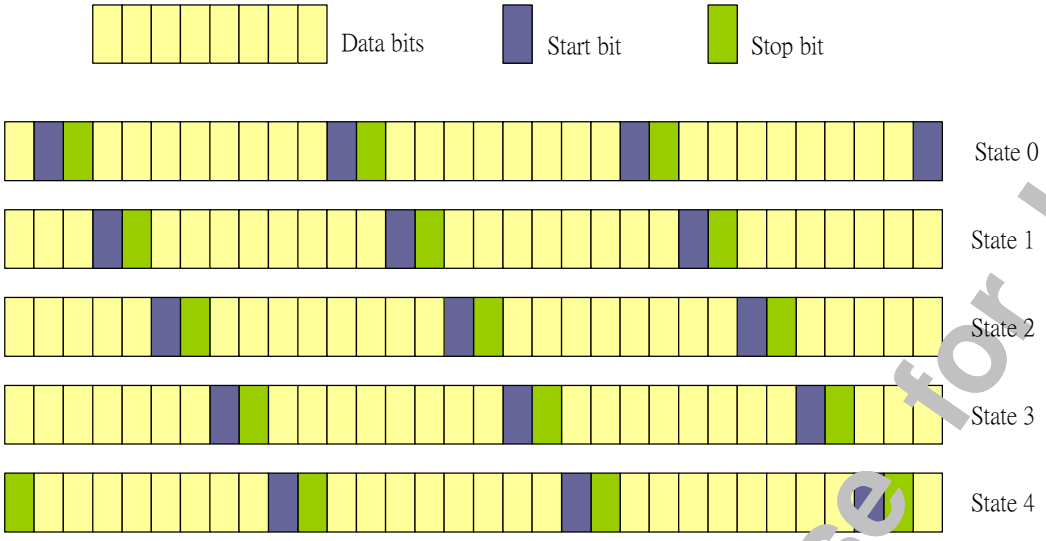

Figure 57 Data Format Conversion of RA0

The RA0 converter processes data state by state. Therefore, before filling in new data, software must ensure that converted data of in a state is withdrawn, otherwise the converted data is replaced by new data. For example, if 32 bits of data are written, the state pointer increments from state 0 to state 1, and word ready of state 0 is asserted. Before writing the next 32-bit data, the word of state 0 must be withdrawn first, or the data is lost when the next conversion is performed.

RA0 records the number of written bytes, the state pointer, and a ready state word. This information helps the software to perform flow control. See Register Definition for more detail.

For RA1 conversion, both downlink and uplink directions are supported. The data formats vary for different data rate. Detailed conversion tables are shown in and . The yellow part is the payload data, and the blue part is the status bit.

Bit 0 → Bit 6

D1	D2	D3	D4	D5	D6	S1
D7	D8	D9	D10	D11	D12	X
D13	D14	D15	D16	D17	D18	S3
D19	D20	D21	D22	D23	D24	S4
E4	E5	E6	E7	D25	D26	D27
D28	D29	D30	S6	D31	D32	D33
D34	D35	D36	X	D37	D38	D39
D40	D41	D42	S8	D43	D44	D45
D46	D47	D48	S9			

Bit 59

Figure 58 Data Format Conversion for 6k/12k RA1

MTK Confidential Release for Konka

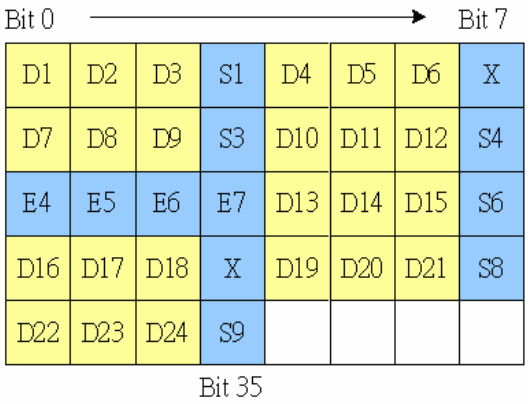

Figure 59 Data Format Conversion for 3.6k RA1

For FAX, two types of bit-reversal functions are provided. Type 1 reversal is a bit-wise reversal (), and Type 2 is a byte-wise reversal ().

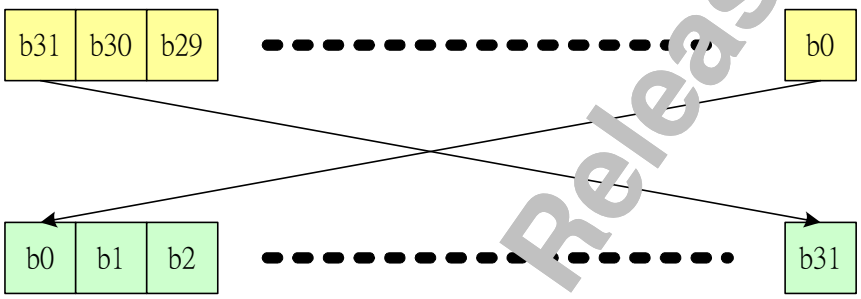

Figure 60 Type 1 Bit Reversal

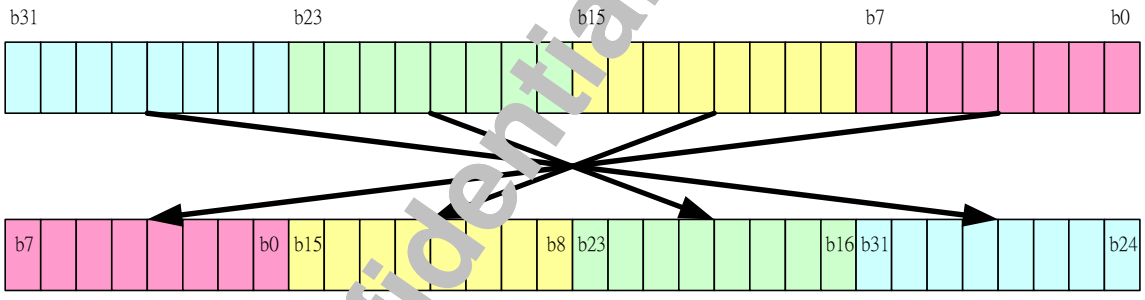

Figure 61 Type 2 Bit Reversal

Register Address	Register Function	Acronym
CSD + 0000h	CSD RA0 Control Register	**CSD_RA0_CON**
CSD + 0004h	CSD RA0 Status Register	**CSD_RA0_STA**
CSD + 0008h	CSD RA0 Input Data Register	**CSD_RA0_DI**
CSD + 000Ch	CSD RA0 Output Data Register	**CSD_RA0_DO**
CSD + 0100h	CSD RA1 6K/12K Uplink Input Data Register 0	**CSD_RA1_6_12K_ULDI0**
CSD + 0104h	CSD RA1 6K/12K Uplink Input Data Register 1	**CSD_RA1_6_12K_ULDI1**
CSD + 0108h	CSD RA1 6K/12K Uplink Status Data Register	**CSD_RA1_6_12K_ULSTUS**
CSD + 010Ch	CSD RA1 6K/12K Uplink Output Data Register 0	**CSD_RA1_6_12K_ULDO0**

MTK Confidential Release for Konka

CSD + 0110h	CSD RA1 6K/12K Uplink Output Data Register 1	**CSD_RA1_6_12K_ULDO1**
CSD + 0200h	CSD RA1 6K/12K Downlink Input Data Register 0	**CSD_RA1_6_12K_DLDI0**
CSD + 0204h	CSD RA1 6K/12K Downlink Input Data Register 1	**CSD_RA1_6_12K_DLDI1**
CSD + 0208h	CSD RA1 6K/12K Downlink Output Data Register 0	**CSD_RA1_6_12K_DLDO0**
CSD + 020Ch	CSD RA1 6K/12K Downlink Output Data Register 1	**CSD_RA1_6_12K_DLDO1**
CSD + 0210h	CSD RA1 6K/12K Downlink Status Data Register	**CSD_RA1_6_12K_DLSTUS**
CSD + 0300h	CSD RA13.6K Uplink Input Data Register 0	**CSD_RA1_3P6K_ULDI0**
CSD + 0304h	CSD RA13.6K Uplink Status Data Register	**CSD_RA1_3P6K_ULSTUS**
CSD + 0308h	CSD RA13.6K Uplink Output Data Register 0	**CSD_RA1_3P6K_ULDO0**
CSD + 030Ch	CSD RA13.6K Uplink Output Data Register 1	**CSD_RA1_3P6K_ULDO1**
CSD + 0400h	CSD RA1 3.6K Downlink Input Data Register 0	**CSD_RA1_3P6K_DLDI0**
CSD + 0404h	CSD RA1 3.6K Downlink Input Data Register 1	**CSD_RA1_3P6K_DLDI1**
CSD + 0408h	CSD RA1 3.6K Downlink Output Data Register 0	**CSD_RA1_3P6K_DLDO0**
CSD + 040Ch	CSD RA1 3.6K Downlink Status Data Register	**CSD_RA1_3P6K_DLSTUS**
CSD + 0500h	CSD FAX Bit Reverse Type 1 Input Data Register	**CSD_FAX_BR1_DI**
CSD + 0504h	CSD FAX Bit Reverse Type 1 Output Data Register	**CSD_FAX_BR1_DO**
CSD + 0510h	CSD FAX Bit Reverse Type 2 Input Data Register	**CSD_FAX_BR2_DI**
CSD + 0514h	CSD FAX Bit Reverse Type 2 Output Data Register	**CSD_FAX_BR2_DO**

Table 34 CSD Accelerator Registers

5.2.2 Register Definitions

CSD+0000h CSD RA0 Control Register CSD_RA0_CON

Bit	31	30	29	28	27	26	25	24	23	22	21	20	19	18	17	16
Name																
Type																
Reset																
Bit	15	14	13	12	11	10	9	8	7	6	5	4	3	2	1	0
Name											RST	BTS0		VLD_BYTE		
Type											WO	WO		WO		
Reset											0	0		100		

VLD_BYTE Specifies the number of valid bytes in the current input data. This value must be specified before filling data.

BTS0 Back to state 0. Forces RA0 converter return back to state 0. Incomplete words are padded with stop bits. For example, consider a back-to-state0 command that is issued after 8 bytes of data are filled in. All bits after the 8th byte are padded with stop bits, and the second ready word byte RDYWD2 is asserted (**Figure 62**). After removing state word 2, the state pointer goes back to state 0. Note that new data filling should take place after removing state word 2, or the state pointer may be out of order.

MTK Confidential Release for Konka

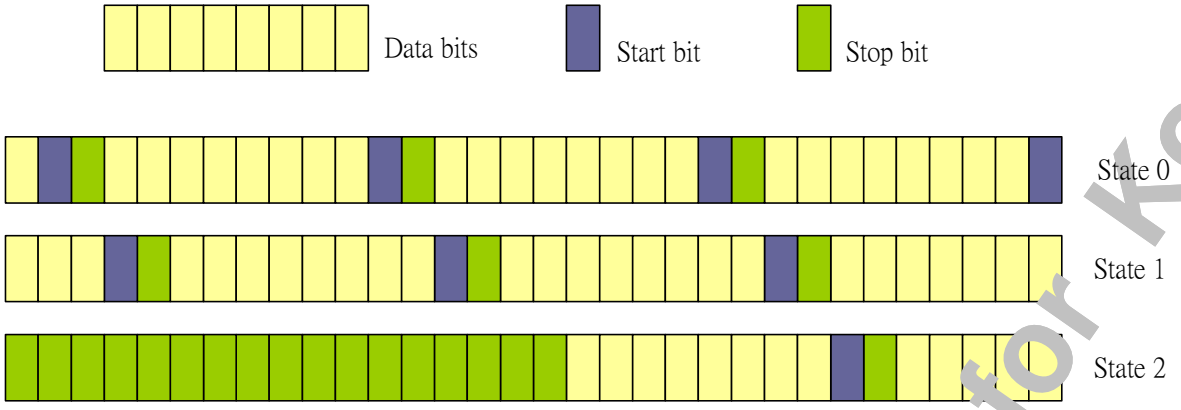

Figure 62 Example of Back to State 0

RST Resets the RA0 converter. If an erroneous operation disorders the data, this bit restores all states to their original state.

CSD+0004h CSD RA0 Status Register CSD_RA0_STA

Bit	31	30	29	28	27	26	25	24	23	22	21	20	19	18	17	16
Name																
Type																
Reset																
Bit	15	14	13	12	11	10	9	8	7	6	5	4	3	2	1	0
Name					BYTECNT				CRTSTA			RDYWD				
Type					RO				RO			RC				
Reset					0				0			0				

RDYWD0~4 Ready words. Indicates which state words are ready for withdrawal. If any bits asserted, data must be withdrawn before new data is filled into CSD_RA0_DI, to avoid data loss.

0 Not ready

1 Ready

CRTSTA Current state. State0 ~ State4. Indicates which state word software is currently filling.

BYTECNT Total number of bytes being filled.

CSD+0008h CSD RA0 Input Data Register CSD_RA0_DI

Bit	31	30	29	28	27	26	25	24	23	22	21	20	19	18	17	16
Name	DIN															
Type	WO															
Reset	0															
Bit	15	14	13	12	11	10	9	8	7	6	5	4	3	2	1	0
Name	DIN															
Type	WO															
Reset	0															

DIN The RA0 conversion input data. The ready word indicator is checked before filling in data; if any words are ready, they are withdrawn first, otherwise the ready data in RA0 converter is replaced.

CSD+000Ch CSD RA0 Output Data Register CSD_RA0_DO

Bit	31	30	29	28	27	26	25	24	23	22	21	20	19	18	17	16
Name	DOUT															
Type	RO															
Reset	0															
Bit	15	14	13	12	11	10	9	8	7	6	5	4	3	2	1	0
Name	DOUT															
Type	RO															

MTK Confidential Release for Konka

Reset	0

DOUT RA0 converted data. The return data corresponds to the ready word indicator defined in CSD_RA0_STA register. The five bits of RDYWD map to state0 ~ state 4 respectively. When CSD_RA0_DO is read, the asserted state word is returned. If two state words asserted at the same time, the lower one is returned.

CSD+0100h CSD RA1 6K/12K Uplink Input Data Register 0

CSD_RA1_6_12K_ULDI0

Bit	31	30	29	28	27	26	25	24	23	22	21	20	19	18	17	16
Name	DIN															
Type	WO															
Reset	0															
Bit	15	14	13	12	11	10	9	8	7	6	5	4	3	2	1	0
Name	DIN															
Type	WO															
Reset	0															

DIN D1 to D32 of the RA1 uplink data.

CSD+0104h CSD RA1 6K/12K Uplink Input Data Register 1

CSD_RA1_6_12K_ULDI1

Bit	31	30	29	28	27	26	25	24	23	22	21	20	19	18	17	16
Name																
Type																
Reset																
Bit	15	14	13	12	11	10	9	8	7	6	5	4	3	2	1	0
Name	DIN															
Type	WO															
Reset	0															

DIN D33 to D48 of the RA1 uplink data.

CSD+0108h CSD RA1 6K/12K Uplink Status Data Register

CSD_RA1_6_12K_ULSTUS

Bit	31	30	29	28	27	26	25	24	23	22	21	20	19	18	17	16
Name																
Type																
Reset																
Bit	15	14	13	12	11	10	9	8	7	6	5	4	3	2	1	0
Name										E7	E6	E5	E4	X	SB	SA
Type										WO	WO	WO	WO	WO	WO	WO
Reset										0	0	0	0	0	0	0

SA Represents S1, S3, S6, and S8 of the status bits.
SB Represents S4 and S9 of the status bits.
X Represents X of the status bits.
E4 Represents E4 of the status bits.
E5 Represents E5 of the status bits.
E6 Represents E6 of the status bits.
E7 Represents E7 of the status bits.

CSD+010Ch CSD RA1 6K/12K Uplink Output Data Register 0

CSD_RA1_6_12K_ULDO0

Bit	31	30	29	28	27	26	25	24	23	22	21	20	19	18	17	16
Name	DOUT															

MTK Confidential Release for Konka

Type	RO															
Reset	0															
Bit	15	14	13	12	11	10	9	8	7	6	5	4	3	2	1	0
Name	DOU															
Type	RO															
Reset	0															

DOUT Bit 0 to bit 31 of the RA1 6K/12K uplink frame.

CSD+0110h CSD RA1 6K/12K Uplink Output Data Register 1

CSD_RA1_6_12K_ULDO1

Bit	31	30	29	28	27	26	25	24	23	22	21	20	19	18	17	16
Name					DOUT											
Type					RO											
Reset					0											
Bit	15	14	13	12	11	10	9	8	7	6	5	4	3	2	1	0
Name	DOUT															
Type	RO															
Reset	0															

DOUT Bit 32 to bit 59 of the RA1 6K/12K uplink frame.

CSD+0200h CSD RA1 6K/12K Downlink Input Data Register 0

CSD_RA1_6_12K_DLDI0

Bit	31	30	29	28	27	26	25	24	23	22	21	20	19	18	17	16
Name	DIN															
Type	WO															
Reset	0															
Bit	15	14	13	12	11	10	9	8	7	6	5	4	3	2	1	0
Name	DIN															
Type	WO															
Reset	0															

DIN Bit 0 to bit 31 of the RA1 6K/12K downlink frame.

CSD+0204h CSD RA1 6K/12K Downlink Input Data Register 1

CSD_RA1_6_12K_DLDI1

Bit	31	30	29	28	27	26	25	24	23	22	21	20	19	18	17	16
Name					DIN											
Type					WO											
Reset					0											
Bit	15	14	13	12	11	10	9	8	7	6	5	4	3	2	1	0
Name	DIN															
Type	WO															
Reset	0															

DIN Bit 32 to bit 59 of the RA1 6K/12K downlink frame.

CSD+0208h CSD RA1 6K/12K Downlink Output Data Register 0

CSD_RA1_6_12K_DLDO0

Bit	31	30	29	28	27	26	25	24	23	22	21	20	19	18	17	16
Name	DOUT															
Type	RO															
Reset	0															
Bit	15	14	13	12	11	10	9	8	7	6	5	4	3	2	1	0
Name	DOUT															
Type	RO															
Reset	0															

MTK Confidential Release for Konka

DOUT D1 to D32 of the RA1 downlink data.

CSD+020Ch CSD RA1 6K/12K Downlink Output Data Register 1

CSD_RA1_6_12K_DLDO1

Bit	31	30	29	28	27	26	25	24	23	22	21	20	19	18	17	16
Name																
Type																
Reset																
Bit	15	14	13	12	11	10	9	8	7	6	5	4	3	2	1	0
Name	DOUT															
Type	RO															
Reset	0															

DOUT D33 to D48 of the RA1 downlink data.

CSD+0210h CSD RA1 6K/12K Downlink Status Data Register

CSD_RA1_6_12K_DLSTUS

Bit	31	30	29	28	27	26	25	24	23	22	21	20	19	18	17	16
Name																
Type																
Reset																
Bit	15	14	13	12	11	10	9	8	7	6	5	4	3	2	1	0
Name										E7	E6	E5	E4	X	SB	SA
Type										RO	RO	RO	RO	RO	RO	RO
Reset										0	0	0	0	0	0	0

SA The majority vote of the S1, S3, S6 and S8 status bits. If the vote is split, SA=0.

SB The majority vote of the S4 and S9 status bits. If the vote is split, SB=0.

X The majority vote of the two X bits in downlink frame. If the vote is split, X=0.

E4 Represents E4 of the status bits.

E5 Represents E5 of the status bits.

E6 Represents E6 of the status bits.

E7 Represents E7 of the status bits.

CSD+0300h CSD RA1 3.6K Uplink Input Data Register 0

CSD_RA1_3P6K_ULDI0

Bit	31	30	29	28	27	26	25	24	23	22	21	20	19	18	17	16
Name									DIN							
Type									WO							
Reset									0							
Bit	15	14	13	12	11	10	9	8	7	6	5	4	3	2	1	0
Name	DIN															
Type	WO															
Reset	0															

DIN D1 to D24 of the RA1 3.6K uplink data.

CSD+0304h CSD RA1 3.6K Uplink Status Data Register

CSD_RA1_3P6K_ULSTUS

Bit	31	30	29	28	27	26	25	24	23	22	21	20	19	18	17	16
Name																
Type																
Reset																
Bit	15	14	13	12	11	10	9	8	7	6	5	4	3	2	1	0
Name										E7	E6	E5	E4	X	SB	SA

MTK Confidential Release for Konka

Type										WO	WO	WO	WO	WO	WO	WO
Reset										0	0	0	0	0	0	0

SA Represents S1, S3, S6, and S8 of the status bits.
SB Represents S4 and S9 of the status bits.
X Represents X of the status bits.
E4 Represents E4 of the status bits.
E5 Represents E5 of the status bits.
E6 Represents E6 of the status bits.
E7 Represents E7 of the status bits.

CSD+0308h CSD RA1 3.6K Uplink Output Data Register 0

CSD_RA1_3P6K_ULDO0

Bit	31	30	29	28	27	26	25	24	23	22	21	20	19	18	17	16
Name	DOUT															
Type	RO															
Reset	0															
Bit	15	14	13	12	11	10	9	8	7	6	5	4	3	2	1	0
Name	DOUT															
Type	RO															
Reset	0															

DOUT Bit 0 to bit 31 of the RA1 3.6K uplink frame.

CSD+030Ch CSD RA1 3.6K Uplink Output Data Register 1

CSD_RA1_3P6K_ULDO1

Bit	31	30	29	28	27	26	25	24	23	22	21	20	19	18	17	16
Name																
Type																
Reset																
Bit	15	14	13	12	11	10	9	8	7	6	5	4	3	2	1	0
Name													DOUT			
Type													RO			
Reset													0			

DOUT Bit 32 to bit 35 of the RA1 3.6K uplink frame.

CSD+0400h CSD RA1 3.6K Downlink Input Data Register 0

CSD_RA1_3P6K_DLDI0

Bit	31	30	29	28	27	26	25	24	23	22	21	20	19	18	17	16
Name	DIN															
Type	WO															
Reset	0															
Bit	15	14	13	12	11	10	9	8	7	6	5	4	3	2	1	0
Name	DIN															
Type	WO															
Reset	0															

DIN Bit 0 to bit 31 of the RA1 3.6K downlink frame.

CSD+0404h CSD RA1 3.6K Downlink Input Data Register 1

CSD_RA1_3P6K_DLDI1

Bit	31	30	29	28	27	26	25	24	23	22	21	20	19	18	17	16
Name																
Type																
Reset																

MTK Confidential Release for Konka

Bit	15	14	13	12	11	10	9	8	7	6	5	4	3	2	1	0
Name													DIN			
Type													WO			
Reset													0			

DIN Bit 32 to bit 35 of the RA1 3.6K downlink frame.

CSD+0408h CSD RA1 3.6K Downlink Output Data Register 0

CSD_RA1_3P6K_DLDO0

Bit	31	30	29	28	27	26	25	24	23	22	21	20	19	18	17	16
Name									DOUT							
Type									RO							
Reset									0							
Bit	15	14	13	12	11	10	9	8	7	6	5	4	3	2	1	0
Name	DOUT															
Type	RP															
Reset	0															

DIN D1 to D24 of the RA1 3.6K downlink data.

CSD+040Ch CSD RA1 3.6K Downlink Status Data Register

CSD_RA1_3P6K_DLSTUS

Bit	31	30	29	28	27	26	25	24	23	22	21	20	19	18	17	16
Name																
Type																
Reset																
Bit	15	14	13	12	11	10	9	8	7	6	5	4	3	2	1	0
Name										E7	E6	E5	E4	X	SB	SA
Type										RO	RO	RO	RO	RO	RO	RO
Reset										0	0	0	0	0	0	0

SA The majority vote of the S1, S3, S6 and S8 status bits. If the vote is split, SA=0.

SB The majority vote of the S4 and S9 status bits. If the vote is split, SB=0.

X The majority vote of the two X bits in downlink frame. If the vote is split, X=0.

E4 Represents E4 of status bits.

E5 Represents E5 of status bits.

E6 Represents E6 of status bits.

E7 Represents E7 of status bits.

CSD+0500h CSD FAX Bit Reverse Type 1 Input Data Register

CSD_FAX_BR1_DI

Bit	31	30	29	28	27	26	25	24	23	22	21	20	19	18	17	16
Name	DIN															
Type	WO															
Reset	0															
Bit	15	14	13	12	11	10	9	8	7	6	5	4	3	2	1	0
Name	DIN															
Type	WO															
Reset	0															

DIN 32-bit input data for a Type 1 bit reversal of the FAX data. A Type 1 bit reversal reverses the data bit by bit.

CSD+0504h CSD FAX Bit Reverse Type 1 Output Data Register

CSD_FAX_BR1_DO

Bit	31	30	29	28	27	26	25	24	23	22	21	20	19	18	17	16
Name	DOUT															

MTK Confidential Release for Konka

Type	RO															
Reset	0															
Bit	15	14	13	12	11	10	9	8	7	6	5	4	3	2	1	0
Name	DOUT															
Type	RO															
Reset	0															

DOUT 32-bit result data for a Type 1 bit reversal of the FAX data.

CSD+0510h CSD FAX Bit Reverse Type 2 Input Data Register CSD_FAX_BR2_DI

Bit	31	30	29	28	27	26	25	24	23	22	21	20	19	18	17	16
Name	DIN															
Type	WO															
Reset	0															
Bit	15	14	13	12	11	10	9	8	7	6	5	4	3	2	1	0
Name	DIN															
Type	WO															
Reset	0															

DIN 32-bit input data for a Type 2 bit reversal of the FAX data. A Type 2 bit reversal reverses the data byte by byte.

CSD+0514h CSD FAX Bit Reverse Type 2 Output Data Register CSD_FAX_BR2_DO

Bit	31	30	29	28	27	26	25	24	23	22	21	20	19	18	17	16
Name	DOUT															
Type	RO															
Reset	0															
Bit	15	14	13	12	11	10	9	8	7	6	5	4	3	2	1	0
Name	DOUT															
Type	RO															
Reset	0															

DOUT 32-bit result data for a Type 2 bit reversal of the FAX data.

5.3 FCS Codec

5.3.1 General Description

The Frame Check Sequence (FCS) serves to detect errors in the following information bits:

- **RLP-frame of CSD services in GSM**: The frame length is fixed at 240 or 576 bits including the 24-bit FCS field.
- **LLC-frame of GPRS service**: The frame length is determined by the information field, and length of the FCS field is 24 bits.

Generation of the FCS is very similar to CRC coding in baseband signal processing. ETSI GSM specifications 04.22 and 04.64 both define the coding rules as:

1. The CRC is the one's complement of the modulo-2 sum of the following additives:
   - the remainder of $x^k \cdot (x^{23} + x^{22} + x^{21} + \ldots + x^2 + x + 1)$ modulo-2 divided by the generator polynomial, where k is the number of bits of the dividend (i.e. fill the shift registers with all ones initially before feeding data); and,

MTK Confidential Release for Konka

- the remainder of the modulo-2 division by the generator polynomial of the product of x^{24} by the dividend, which are the information bits.

2. The CRC-24 generator polynomial is:
   $G(x) = x^{24} + x^{23} + x^{21} + x^{20} + x^{19} + x^{17} + x^{16} + x^{15} + x^{13} + x^{8} + x^{7} + x^{5} + x^{4} + x^{2} + 1$

3. The 24-bit CRC is appended to the data bits in the MSB-first manner.Decoding is identical to encoding except that data fed into the syndrome circuit is 24 bits longer than the information bits at encoding. The dividend is also multiplied by x^{24}. If no error occurs, the remainder satisfies:
   $R(x) = x^{22} + x^{21} + x^{19} + x^{18} + x^{16} + x^{15} + x^{11} + x^{8} + x^{5} + x^{4}$ (0x6d8930)
   The parity output word is 0x9276cf.

In contrast to conventional CRC, this special coding scheme makes the encoder identical to the decoder and simplifies the hardware design.

5.3.2 Register Definitions

FCS+0000h FCS input data register FCS_DATA

Bit	15	14	13	12	11	10	9	8	7	6	5	4	3	2	1	0
Name	**D15**	**D14**	**D13**	**D12**	**D11**	**D10**	**D9**	**D8**	**D7**	**D6**	**D5**	**D4**	**D3**	**D2**	**D1**	**D0**
Type	WO	WO	WO	WO	WO	WO	WO	WO	WO	WO	WO	WO	WO	WO	WO	WO

The data bits input. First write of this register is the starting point of the encode or decode process.

D0~15 The input format is $D15 \cdot x^{n} + D14 \cdot x^{n-1} + D13 \cdot x^{n-2} + \ldots + Dk \cdot x^{k} + \ldots$, thus D15 is the first bit pushed into the shift register. If the last data word is less than 16 bits, the remaining bits are neglected.

FCS+0004h Input data length indication register FCS_DLEN

Bit	15	14	13	12	11	10	9	8	7	6	5	4	3	2	1	0
Name	**LEN**															
Type	WO															

The MCU specifies the total data length (in bits) to be encoded or decoded.

LEN Data length. The length must be a multiple of 8 bits.

FCS+0x0008h FCS parity output register 1, MSB part FCS_PAR1

Bit	15	14	13	12	11	10	9	8	7	6	5	4	3	2	1	0
Name	**P15**	**P14**	**P13**	**P12**	**P11**	**P10**	**P9**	**P8**	**P7**	**P6**	**P5**	**P4**	**P3**	**P2**	**P1**	**P0**
Type	RC	RC	RC	RC	RC	RC	RC	RC	RC	RC	RC	RC	RC	RC	RC	RC
Reset	0	0	0	0	0	0	0	0	0	0	0	0	0	0	0	0

FCS+000Ch FCS parity output register 2, LSB part FCS_PAR2

Bit	15	14	13	12	11	10	9	8	7	6	5	4	3	2	1	0
Name									**P23**	**P22**	**P21**	**P20**	**P19**	**P18**	**P17**	**P16**
Type									RC	RC	RC	RC	RC	RC	RC	RC
Reset									0	0	0	0	0	0	0	0

Parity bits output. For FCS_PAR2, bit 8 to bit 15 are filled with zeros when reading.

P0~23 The output format is $P23 \cdot D^{23} + P22 \cdot D^{22} + P21 \cdot D^{21} + \ldots + Pk \cdot D^{k} + \ldots + P1 \cdot D^{1} + P0$, thus P23 is the first bit being popped out from the shift register and the first appended to the information bits. In other words, {FCS_PAR2[7:0], FCS_PAR1[15:8], FCS_PAR1[7:0] } is the order of the parity bits appended to the data.

FCS+0010h FCS codec status register FCS_STAT

Bit	15	14	13	12	11	10	9	8	7	6	5	4	3	2	1	0

MTK Confidential Release for Konka

Name														BUSY	FER	RDY
Type														RC	RC	RC
Reset														0	1	0

BUSY Indicates whether or not the current data work is available for writing. The codec works in a serial manner and the data word is input in a parallel manner. BUSY=1 indicates that the current data word is being processed and a write to FCS_DATA is invalid: the operation is permitted but the data may not be consistent. BUSY=0 allows a write of FCS_DATA during an encoding or decoding process.

FER Frame error indication, for decode mode only. FER=0 means no error has occurred; FER=1 indicates the parity check has failed. Writing to FCS_RST.RST or the first write to FCS_DATA resets this bit to 0.

RDY When RDY=1, verify that the encode or decode process has been finished. For an encode, the parity data in FCS_PAR1 and FCS_PAR2 are available and consistent. For a decode, FCS_STAT.FER indication is valid. A write of FCS_RST.RST or the first write of FCS_DATA resets this bit to 0.

FCS+0014h FCS codec reset register FCS_RST

Bit	15	14	13	12	11	10	9	8	7	6	5	4	3	2	1	0
Name													EN_DE	PAR	BIT	RST
Type													WO	WO	WO	WO

RST RST=0 resets the CRC coprocessor. Before setup of the FCS codec, the MCU needs to set RST=0 to flush the shift register content before encode or decode.

BIT BIT=0 signifies not to invert the bit order in a data word byte when the codec is running. BIT=1 signifies to reverse the bit order in a byte written in FCS_DATA.

PAR PAR=0 means not to invert the bit order in a byte of parity words when the codec is running, including reading FCS_PAR1 and FCS_PAR2. PAR=1 means the bit order of the parity words should be reversed, in encoding or decoding .

EN_DE EN_DE=0 indicates an encode operation; EN_DE=1 indicates a decode operation.

5.4 PPP Framer Coprocessor

5.4.1 General Description

The PPP Framer Coprocessor (PFC) is an accelerator for PPP frame parsing; it helps pack and unpack the PPP frame while performing:

1. Flag sequence (0x7e) recognition,
2. Byte stuffing handling, and
3. 16- or 32-bit frame check sequence (FCS) handling.

The PFC architecture is based on Direct Memory Access (DMA). All PPP framer parameters are configurable, such as Address and Control Field Compression (ACFC), Protocol Field Compression (PFC), 16- or 32-bit FCS, and Asynchronous Control Character Map (ACCM).

5.4.2 Register Definitions

Register Address	Register Function	Acronym
PFC + 0000h	PFC start register	**PFC_START**
PFC + 0004h	PFC control register	**PFC_CON**
PFC + 0008h	PFC encoding protocol	**PFC_EPTC**

MTK Confidential Release for Konka

PFC + 000ch	PFC initial byte stuffing configuration for encoding	**PFC_EACCM**
PFC + 0010h	PFC destination/source address	**PFC_D/SRC**
PFC + 0014h	PFC destination buffer/source operation length	**PFC_D/SLEN**
PFC + 0018h	PFC slow down rate	**PFC_SDRAT**
PFC + 001ch	PFC status	**PFC_STAT**
PFC + 0020h	PFC current source address in decoding mode	**PFC_DCSRC**
PFC + 0024h	PFC current source address in encoding mode	**PFC_ECSRC**
PFC + 0028h	PFC current destination address in decoding mode	**PFC_DCDES**
PFC + 002ch	PFC current destination address in encoding mode	**PFC_ECDES**
PFC + 0030h	PFC unread source data length in decoding mode	**PFC_DUSLEN**
PFC + 0034h	PFC unread source data length in encoding mode	**PFC_EUSLEN**
PFC + 0038h	PFC unused write buffer length in decoding mode	**PFC_DUDLEN**
PFC + 003ch	PFC unused write buffer length in encoding mode	**PFC_EUDLEN**
PFC + 0040h	PFC decoding protocol	**PFC_DPTC**
PFC + 0044h	PFC interrupt status	**PFC_INTSTA**
PFC + 0048h	PFC interrupt enable	**PFC_INTEN**

Table 35 PFC Registers

PFC+0000h PFC start register PFC_START

Bit	15	14	13	12	11	10	9	8	7	6	5	4	3	2	1	0
Name					ELASTD	ELASTS	DSET7E	DF7E	EUPDEL	DUPDEL	ECLR	DCLR	EUPSRL	DUPSRL	NADDR	DEL/ST
Type					R/W	R/W	R/W	R/W	R/W	R/W	R/W	R/W	R/W	R/W	R/W	R/W
Reset					0	0	0	0	0	0	0	0	0	0	0	0

Start register for PPP framer coprocessor.

DEL/ST When this bit is enabled, the PFC is started up; otherwise, the DES and DLEN statuses are updated.

NADDR When NADDR is asserted, PFC updates only DSLEN and bypasses DSRC when updating source or destination information.

DUPSRL Force an update of the decoding register set for SRC and SLEN. This bit only takes effect when DEL/ST is enabled. If this bit is disabled, the operation uses the old settings, i.e., CSRC and USLEN.

EUPSRL Force an update of the encoding register set for SRC and SLEN. This bit only takes effect when DEL/ST is enabled. If this bit is disabled, the operation uses the old settings, i.e., CSRC and USLEN.

DCLR Reset all decoding states and return to the initial state.

ECLR Reset all encoding states and return to the initial state.

DUPDEL Force an update of the decoding register set for DES and DLEN. This bit only takes effect when DEL/ST is disabled. After asserting this bit, a de-assert should follow immediately (in the next instruction cycle). **Note: The result depends on the ENC bit. Only one of the encoder and decoder parts changes.**

EUPDEL Force an update of the encoding register set for DES and DLEN. This bit only takes effect when DEL/ST is disabled. After asserting this bit, a de-assert should follow immediately (in the next instruction cycle). **Note: The result depends on the ENC bit. Only one of the encoder and decoder parts changes.**

DF7E In decoding mode, if PFC starts with DF7E enabled, PFC does nothing until a 0x7e byte is found.

DSET7E In decoding mode, set 0x7e-found mode.

ELASTS End the process (append the FCS and flag sequence on last) after source data has run out.

MTK Confidential Release for Konka

ELASTD End the process (append the FCS and flag sequence on last) after the destination buffer is full. The buffer may have a 0- to 4-byte space, depending on byte-stuffing conditions of FCS and the last encoded character.

PFC+0004h PFC control register PFC_CON

Bit	15	14	13	12	11	10	9	8	7	6	5	4	3	2	1	0
Name									EDEL	DF32	DPFC	DACFC	EF32	EPFC	EACFC	ENC
Type									R/W	R/W	R/W	R/W	R/W	R/W	R/W	R/W
Reset									1	0	0	0	0	0	0	0

Control register for PPP framer coprocessor.

ENC Encode bit. If enabled, this operation is encoding; otherwise the operation is decoding.

EACFC Address and Control Field Compression in encoding mode. This Configuration Option provides a method to negotiate the compression of the Data Link Layer Address and Control fields. By default, all implementations MUST transmit frames with Address and Control fields appropriate to the link framing. When the Address and Control fields are compressed, the Data Link Layer FCS field is calculated based on the compressed frame, not the original uncompressed frame.

EPFC Protocol Field Compression in encoding mode. PPP Protocol field numbers are chosen such that some values may be compressed into a single octet form that is clearly distinguishable from the two-octet form. This Configuration Option is sent to inform the peer that the implementation can receive such single octet Protocol fields. When a Protocol field is compressed, the Data Link Layer FCS field is calculated on the compressed frame, not the original uncompressed frame.

EF32 Use FCS32 in encoding mode.

DACFC Use Address and Control Field Compression in decoding mode.

DPFC Use Protocol Field Compression in decoding mode.

DF32 Use FCS32 in decoding mode.

EDEL Escape DEL(0x7f) in encoding mode.

PFC+0008h PFC encoding protocol PFC_EPTC

Bit	15	14	13	12	11	10	9	8	7	6	5	4	3	2	1	0
Name	EPTC[15:0]															
Type	R/W															
Reset	0															

EPTC Encoding protocol. This register contains the protocol field value for encoding a frame. Writing 8 or 16 bits depends on the EPFC bit. An 8-bit protocol uses LSB.

PFC+000ch PFC byte stuffing configuration for encoding PFC_EACCM

Bit	31	30	29	28	27	26	25	24	23	22	21	20	19	18	17	16
Name	EACCM[31:16]															
Type	R/W															
Reset	0xffff															
Bit	15	14	13	12	11	10	9	8	7	6	5	4	3	2	1	0
Name	EACCM[15:0]															
Type	R/W															
Reset	0xffff															

EACCM This byte stuffing control register is for encoding. Each bit of the 32-bit byte stuffing configuration indicates whether or not to enable the byte stuffing option if that byte value is encountered during encoding or decoding.

For example, if bit 7 is set to 1 (enabled), then each byte 0x7 encountered is encoded as {0x7d, 0x27}, i.e. a 0x7d byte followed by the byte (here, 0x7) XOR'ed with 0x20. Similarly, if bit 0 is enabled, {0x7d, 0x20} is decoded into 0x00 by ignoring 0x7d and obtaining 0x20 XOR 0x20 = 0x0.

MTK Confidential Release for Konka

PFC+0010h PFC destination/source address PFC_D/SRC

Bit	31	30	29	28	27	26	25	24	23	22	21	20	19	18	17	16
Name	D/SRC[31:16]															
Type	R/W															
Reset	0															
Bit	15	14	13	12	11	10	9	8	7	6	5	4	3	2	1	0
Name	D/SRC[15:0]															
Type	R/W															
Reset	0															

D/SRC When DEL/ST is disabled, D/SRC is the destination address to load when UPDEL is enabled. When DEL/ST is enabled, D/SRC is the source address for PFC operation.

PFC+0014h PFC destination/source operation length PFC_D/SLEN

Bit	15	14	13	12	11	10	9	8	7	6	5	4	3	2	1	0
Name	D/SLEN[15:0]															
Type	R/W															
Reset	0															

D/SLEN When DEL/ST is disabled, D/SLEN is the destination buffer length. When DEL/ST is enabled, D/SLEN is the source length for the PFC operation. **Note: Zero length is not allowed in decoding mode. A zero length when encoding results in padding FCS and 0x7e directly regardless of whether or not the ELAST bit is asserted.**

PFC+0018h PFC slow down rate PFC_SDRAT

Bit	15	14	13	12	11	10	9	8	7	6	5	4	3	2	1	0
Name									SDRAT[7:0]							
Type									R/W							
Reset									0							

SDRAT Slow down the PFC to prevent too many requests for AHB resources. Each unit increment translates into a 4-cycle delay for each bus access (read or write). The range of SDRAT is from 0 (no delay) to 255 (255*4=1020 cycles' delay).

PFC+001ch PFC return status PFC_STAT

Bit	15	14	13	12	11	10	9	8	7	6	5	4	3	2	1	0
Name													STAT[3:0]			
Type													RO			
Reset													0			

STAT Current status of PFC. 0000b: OK. 0001b: BUSY. 0010b: write buffer full. 0011b: zero source length in decoding. 0100b: FCS error in decoding mode. 0101b: not starting with 0x7e byte in decoding mode. 0110b: address or control field error in decoding mode. 0111b:Invalid frame due to 0x7d, 0x7e sequence occurred. 1000b: RESUME stat, wait for next last or non-last operation.

PFC+0020h PFC current source address in decoding PFC_DCSRC

Bit	31	30	29	28	27	26	25	24	23	22	21	20	19	18	17	16
Name	DCSRC[31:16]															
Type	RO															
Reset	0															
Bit	15	14	13	12	11	10	9	8	7	6	5	4	3	2	1	0
Name	DCSRC[15:0]															
Type	RO															
Reset	0															

DCSRC CSRC is the current source address in the PFC in decoding mode.

PFC+0024h PFC current source address in encoding PFC_ECSRC

Bit	31	30	29	28	27	26	25	24	23	22	21	20	19	18	17	16

MTK Confidential Release for Konka

Name	ECSRC[31:16]															
Type	RO															
Reset	0															
Bit	15	14	13	12	11	10	9	8	7	6	5	4	3	2	1	0
Name	ECSRC[15:0]															
Type	RO															
Reset	0															

ECSRC CSRC is the current source address in the PFC in encoding mode.

PFC+0028h PFC current destination address in decoding PFC_DCDES

Bit	31	30	29	28	27	26	25	24	23	22	21	20	19	18	17	16
Name	DCDES[31:16]															
Type	RO															
Reset	0															
Bit	15	14	13	12	11	10	9	8	7	6	5	4	3	2	1	0
Name	DCDES[15:0]															
Type	RO															
Reset	0															

DCDES CDES is the current destination address in the PFC in decoding mode.

PFC+002ch PFC current destination address in encoding PFC_ECDES

Bit	31	30	29	28	27	26	25	24	23	22	21	20	19	18	17	16
Name	ECDES[31:16]															
Type	RO															
Reset	0															
Bit	15	14	13	12	11	10	9	8	7	6	5	4	3	2	1	0
Name	ECDES[15:0]															
Type	RO															
Reset	0															

ECDES CDES is the current destination address in the PFC in encoding mode.

PFC+0030h PFC unread source data length in decoding PFC_DUSLEN

Bit	15	14	13	12	11	10	9	8	7	6	5	4	3	2	1	0
Name	DUSLEN[15:0]															
Type	RO															
Reset	0															

DUSLEN DUSLEN is the unread source data length in decoding mode.

PFC+0034h PFC unread source data length in encoding PFC_EUSLEN

Bit	15	14	13	12	11	10	9	8	7	6	5	4	3	2	1	0
Name	EUSLEN[15:0]															
Type	RO															
Reset	0															

EUSLEN Unread source data length in encoding mode.

PFC+0038h PFC unused destination buffer length in decoding PFC_DUDLEN

Bit	15	14	13	12	11	10	9	8	7	6	5	4	3	2	1	0
Name	DUDLEN[15:0]															
Type	RO															
Reset	0															

DUDLEN Unused write buffer space length in decoding mode.

PFC+003ch PFC unused destination buffer length in encoding PFC_EUDLEN

Bit	15	14	13	12	11	10	9	8	7	6	5	4	3	2	1	0
Name	EUDLEN[15:0]															
Type	RO															
Reset	0															

MTK Confidential Release for Konka

EUDLEN Unused write buffer space length in encoding mode.

PFC+0040h PFC decoding protocol PFC_DPTC

Bit	15	14	13	12	11	10	9	8	7	6	5	4	3	2	1	0
Name	DPTC[15:0]															
Type	RO															
Reset	0															

DPTC Decoding protocol. This register contains the protocol field value decoded from a frame. Writing 8 or 16 bits depends on the DPFC bit. An 8-bit protocol uses LSB.

PFC+0044h PFC interrupt status PFC_INTSTA

Bit	15	14	13	12	11	10	9	8	7	6	5	4	3	2	1	0
Name															INTSTA	
Type															RC	
Reset															0	

INTSTA Interrupt status. Bit 0 indicates that PFC finished with OK or RESUME state. Bit 1 indicates that PFC failed. Further error information can be obtained from PFC_STAT.

PFC+0048h PFC interrupt enable PFC_INTEN

Bit	15	14	13	12	11	10	9	8	7	6	5	4	3	2	1	0
Name															INTEN	
Type															R/W	
Reset															0	

INTEN Interrupt enable control register. When bit 0 is enabled, an interrupt occurs when PFC finishes in the OK or RESUME state. If bit 1 is enabled, PFC interrupts if an error occurs.

5.4.3 MRU

When a PPP task wants to transmit a set of raw data through the network, the data must be encoded first (**Figure 63**). In process A, the raw data is prefixed with an Address (0xff) and Control (0x03) field* (AC), followed by Protocol field** (PTC). An FCS is appended***.

In process B, the data stream resulting from process A is byte-stuffed. A 0x7e byte is then added both at the front and at the end of the byte-stuffed stream.

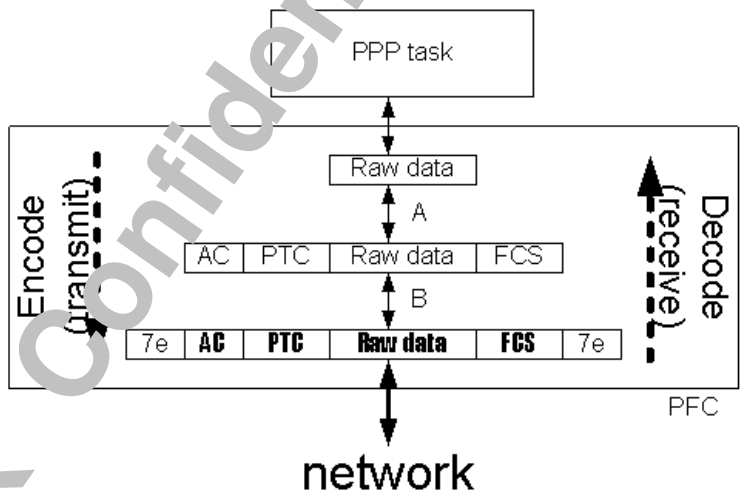

Figure 63 Basic PFC Flow

* The Control field depends on the DACFC, EACFC, and EACCM bits.

MTK Confidential Release for Konka

** The Protocol field depends on the DPTC and EPTC bits.

*** The FCS field depends on the DF32 and EF32 bits.

Figure 64 shows the resulting PPP frame.

Flag	Address	Control	Protocol	Information	Padding	FCS	Flag
01111110	11111111	00000011	8/16 bits	*	*	16/32 bits	01111110

Figure 64 PPP Frame Structure

MTK Confidential Release for Konka

6 Multi-Media Subsystem

MT6228 is a highly integrated Baseband/Multimedia single chip. It integrates several hardware-based multimedia accelerators to enable rich multimedia application. Hardware accelerators include Image signal processor, Image resizer, JPEG Codec, MPEG-4 Codec, GIF Decoder, PNG Decoder, 2D graphics engine, TV encoder, and advanced hardware LCD display controller. A lot of attractive multimedia functions can be realized through above hardware accelerators in MT6228. The functions include camera function, JPEG/GIF/PNG image playback, MPEG-4 video recording, MPEG-4 video playback, TV out, 2D graphics acceleration, and so on. Image data paths of multi-media sub-system are shown in **Figure 1-1**. Hardware data paths and Image DMA are designed to make data transfer more efficient. MT6228 also incorporates NAND Flash, USB 1.1 OTG Controller and SD/SDIO/MMC/MS/MS Pro Controllers for mass data transfers and storage.

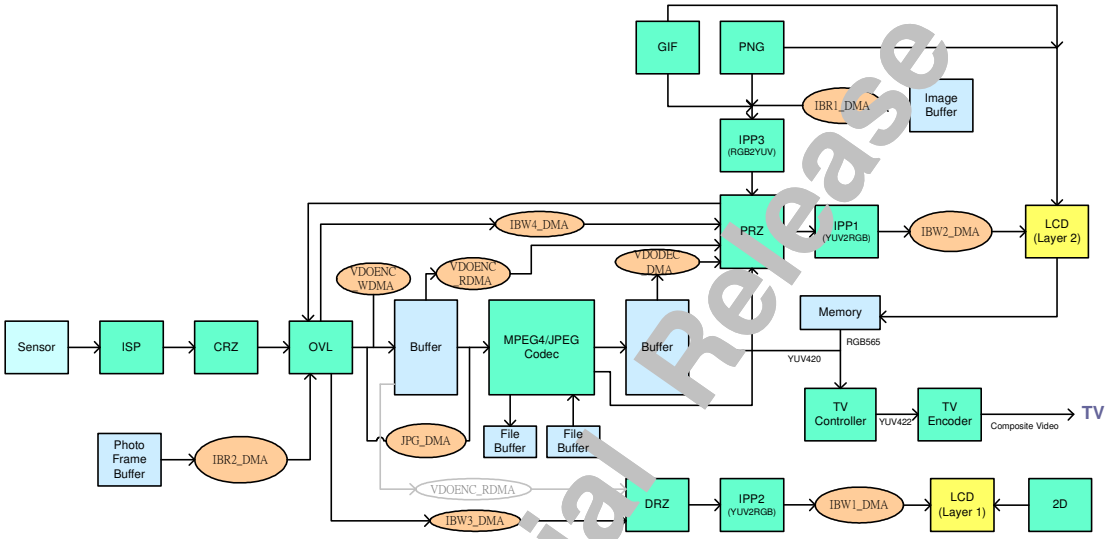

Figure 6-1 Image Data Path of Multi-media Sub-system

6.1 LCD Interface

6.1.1 General Description

MT6228 contains a versatile LCD controller, which is optimized for multimedia applications. This controller supports many types of LCD modules and contains a rich feature set to enhance the functionality. These features are:

- Up to 320 x 240 resolution
- The internal frame buffer supports 8bpp indexed color, RGB 565, RGB 888 and ARGB 8888 format.
- Supports 8-bpp (RGB332), 12-bpp (RGB444), 16-bpp (RGB565), 18-bit (RGB666) and 24-bit (RGB888) LCD modules.
- 6 Layers Overlay with individual color depth, window size, vertical and horizontal offset, source key, alpha value and display rotation control(90°,180°, 270°, mirror and mirror then 90°, 180° and 270°)
- One color look-up table of 24bpp

MTK Confidential Release for Konka

For parallel LCD modules, the LCD controller can reuse external memory interface or use dedicated 8/9/16/18-bit parallel interface to access them and 8080 type interface is supported. It can transfer the display data from the internal SRAM or external SRAM/Flash Memory to the off-chip LCD modules.

For serial LCD modules, this interface performs parallel to serial conversion and both 8- and 9- bit format serial interface is supported. The 8-bit format serial interface uses four pins – LSCE#, LSDA, LSCK and LSA0 – to enter commands and data. Meanwhile, the 9-bit format serial interface uses three pins – LSCE#, LSDA and LSCK – for the same purpose. Data read is not available with the serial interface and data entered must be 8 bits.

Data and command send to LCM are always through the parallel Nandflash/Lcd interface or through serial SPI/LCD interface. Sending LCM signals through EMI is forbidden, but the pixel data produced by LCD controller can be dumped to memory through AHB bus.

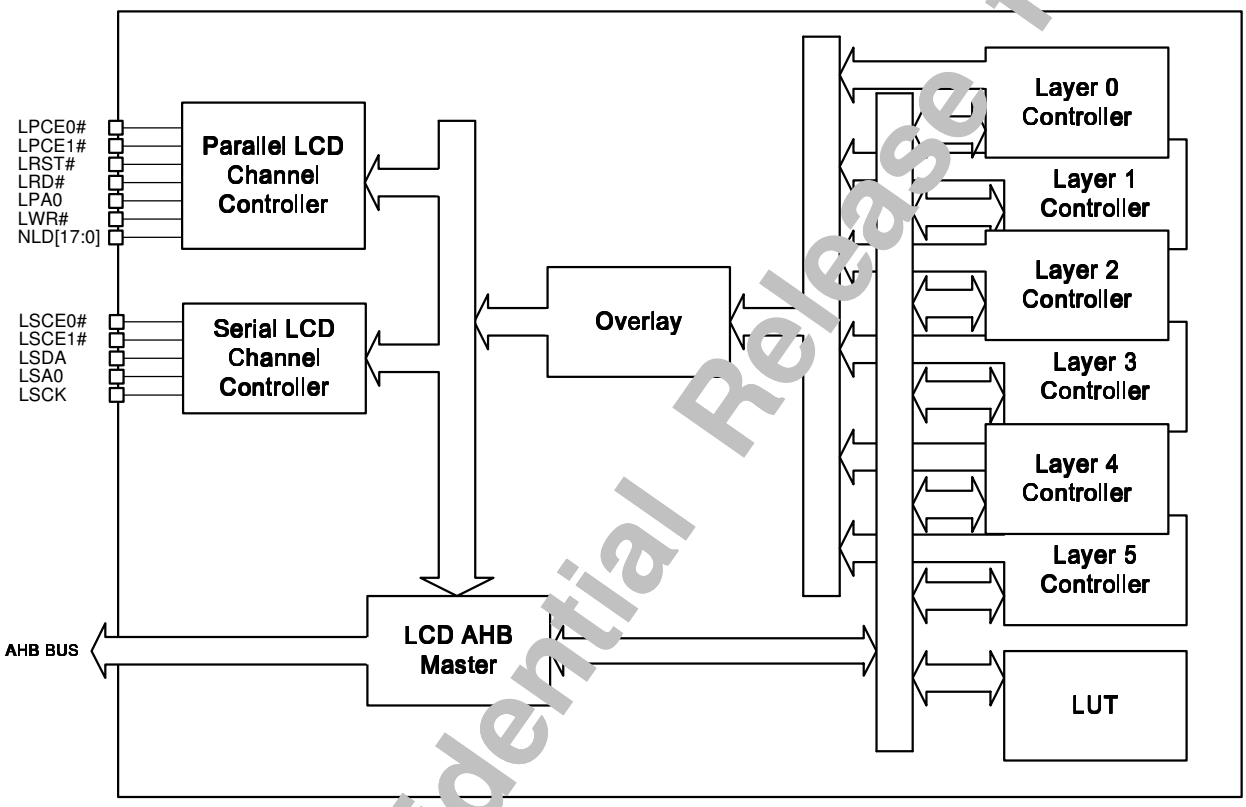

Figure 2 LCD Interface Block Diagram

Figure 3 shows the timing diagram of this serial interface. When the block is idle, LSCK is forced LOW and LSCE# is forced HIGH. Once the data register contains data and the interface is enabled, LSCE# is pulled LOW and remain LOW for the duration of the transmission.

MTK Confidential Release for Konka

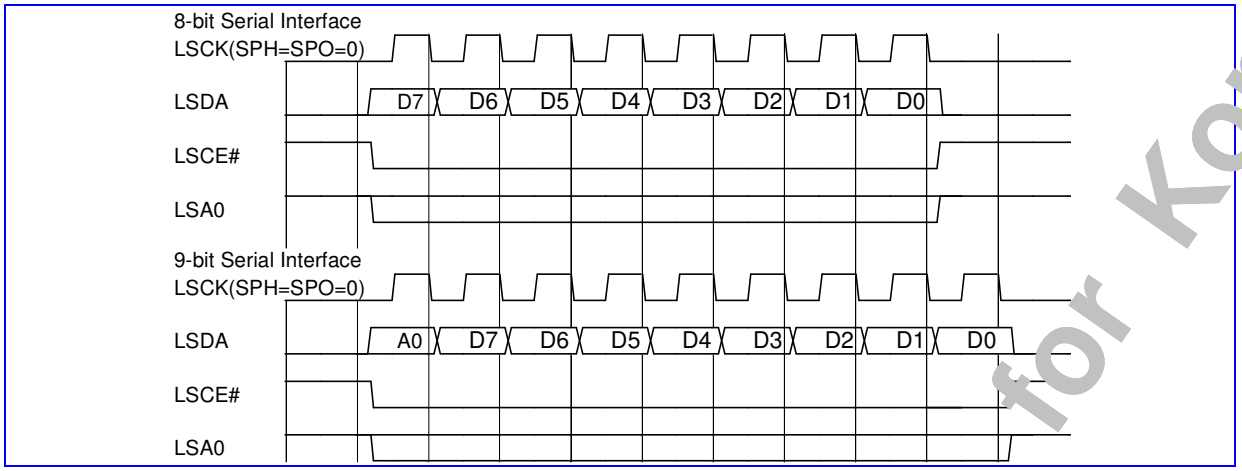

Figure 3 Serial LCD Interface Transfer Timing Diagram

LCD = 0x9000_0000

Address	Register Function	Width	Acronym
LCD + 0000h	LCD Interface Status Register	16	**LCD_STA**
LCD + 0004h	LCD Interface Interrupt Enable Register	16	**LCD_INTEN**
LCD + 0008h	LCD Interface Interrupt Status Register	16	**LCD_INTSTA**
LCD + 000ch	LCD Interface Frame Transfer Register	16	**LCD_START**
LCD + 0010h	LCD Parallel/Serial LCM Reset Register	16	**LCD_RSTB**
LCD + 0014h	LCD Serial Interface Configuration Register	16	**LCD_SCNF**
LCD + 0018h	LCD Parallel Interface 0 Configuration Register	32	**LCD_PCNF0**
LCD + 001ch	LCD Parallel Interface 1 Configuration Register	32	**LCD_PCNF1**
LCD + 0020h	LCD Parallel Interface 2 Configuration Register	32	**LCD_PCNF2**
LCD + 0040h	LCD Main Window Size Register	32	**LCD_MWINSIZE**
LCD + 0044h	LCD ROI Window Write to Memory Offset Register	32	**LCD_WROI_W2MOFS**
LCD + 0048h	LCD ROI Window Write to Memory Control Register	16	**LCD_WROI_W2MCON**
LCD + 004ch	LCD ROI Window Write to Memory Address Register	32	**LCD_WROI_W2MADD**
LCD + 0050h	LCD ROI Window Control Register	32	**LCD_WROICON**
LCD + 0054h	LCD ROI Window Offset Register	32	**LCD_WROIOFS**
LCD + 0058h	LCD ROI Window Command Start Address Register	16	**LCD_WROICADD**
LCD + 005ch	LCD ROI Window Data Start Address Register	16	**LCD_WROIDADD**
LCD + 0060h	LCD ROI Window Size Register	32	**LCD_WROISIZE**
LCD + 0064h	LCD ROI Window Hardware Refresh Register	32	**LCD_WROI_HWREF**
LCD + 0068h	LCD ROI Window Background Color Register	32	**LCD_WROI_BGCLR**
LCD + 0070h	LCD Layer 0 Window Control Register	32	**LCD_L0WINCON**
LCD + 0074h	LCD Layer 0 Source Color Key Register	32	**LCD_L0WINSKEY**
LCD + 0078h	LCD Layer 0 Window Display Offset Register	32	**LCD_L0WINOFS**
LCD + 007ch	LCD Layer 0 Window Display Start Address Register	32	**LCD_L0WINADD**
LCD + 0080h	LCD Layer 0 Window Size	32	**LCD_L0WINSIZE**

MTK Confidential Release for Konka

LCD + 0090h	LCD Layer 1 Window Control Register	32	**LCD_L1WINCON**
LCD + 0094h	LCD Layer 1 Source Color Key Register	32	**LCD_L1WINSKEY**
LCD + 0098h	LCD Layer 1 Window Display Offset Register	32	**LCD_L1WINOFS**
LCD + 009ch	LCD Layer 1 Window Display Start Address Register	32	**LCD_L1WINADD**
LCD + 00a0h	LCD Layer 1 Window Size	32	**LCD_L1WINSIZE**
LCD + 00b0h	LCD Layer 2 Window Control Register	32	**LCD_L2WINCON**
LCD + 00b4h	LCD Layer 2 Source Color Key Register	32	**LCD_L2WINSKEY**
LCD + 00b8h	LCD Layer 2 Window Display Offset Register	32	**LCD_L2WINOFS**
LCD + 00bch	LCD Layer 2 Window Display Start Address Register	32	**LCD_L2WINADD**
LCD + 00c0h	LCD Layer 2 Window Size	32	**LCD_L2WINSIZE**
LCD + 00d0h	LCD Layer 3 Window Control Register	32	**LCD_L3WINCON**
LCD + 00d4h	LCD Layer 3 Source Color Key Register	32	**LCD_L3WINSKEY**
LCD + 00d8h	LCD Layer 3 Window Display Offset Register	32	**LCD_L3WINOFS**
LCD + 00dch	LCD Layer 3 Window Display Start Address Register	32	**LCD_L3WINADD**
LCD + 00e0h	LCD Layer 3 Window Size	32	**LCD_L3WINSIZE**
LCD + 00f0h	LCD Layer 4 Window Control Register	32	**LCD_L4WINCON**
LCD + 00f4h	LCD Layer 4 Source Color Key Register	32	**LCD_L4WINSKEY**
LCD + 00f8h	LCD Layer 4 Window Display Offset Register	32	**LCD_L4WINOFS**
LCD + 00fch	LCD Layer 4 Window Display Start Address Register	32	**LCD_L4WINADD**
LCD + 0100h	LCD Layer 4 Window Size	32	**LCD_L4WINSIZE**
LCD + 0110h	LCD Layer 5 Window Control Register	32	**LCD_L5WINCON**
LCD + 0114h	LCD Layer 5 Source Color Key Register	32	**LCD_L5WINSKEY**
LCD + 0118h	LCD Layer 5 Window Display Offset Register	32	**LCD_L5WINOFS**
LCD + 011ch	LCD Layer 5 Window Display Start Address Register	32	**LCD_L5WINADD**
LCD + 0120h	LCD Layer 5 Window Size	32	**LCD_L5WINSIZE**
LCD + 4000h	LCD Parallel Interface 0 Data	32	**LCD_PDAT0**
LCD + 4100h	LCD Parallel Interface 0 Command	32	**LCD_PCMD0**
LCD + 5000h	LCD Parallel Interface 1 Data	32	**LCD_PDAT1**
LCD + 5100h	LCD Parallel Interface 1 Command	32	**LCD_PCMD1**
LCD + 6000h	LCD Parallel Interface 2 Data	32	**LCD_PDAT2**
LCD + 6100h	LCD Parallel Interface 2 Command	32	**LCD_PCMD2**
LCD + 8000h	LCD Serial Interface 1 Data	16	**LCD_SDAT1**
LCD + 8100h	LCD Serial Interface 1 Command	16	**LCD_SCMD1**
LCD + 9000h	LCD Serial Interface 0 Data	16	**LCD_SDAT0**
LCD + 9100h	LCD Serial Interface 0 Command	16	**LCD_SCMD0**
LCD + c800h ~ cbfch	LCD Color Palette LUT Register	32	**LCD_PAL**
LCD + cc00h ~ ccfch	LCD Interface Command/Parameter Register	32	**LCD_COMD**

MTK Confidential Release for Konka

6.1.2 Table 36 Memory map of LCD InterfaceRegister Definitions

LCD +0000h LCD Interface Status Register LCD_STA

Bit	15	14	13	12	11	10	9	8	7	6	5	4	3	2	1	0
Name														CMD_CPEND	DATA_PEND	RUN
Type														R	R	R
Reset														0	0	0

RUN LCD Interface Running Status

DATA_PEND Data Pending Indicator in Hardware Trigger Mode

CMD_PEND Command Pending Indicator in Hardware Triggered Refresh Mode

LCD +0004h LCD Interface Interrupt Enable Register LCD_INTEN

Bit	15	14	13	12	11	10	9	8	7	6	5	4	3	2	1	0
Name														CMD_CPL	DATA_CPL	CPL
Type														R/W	R/W	R/W
Reset														0	0	0

CPL LCD Frame Transfer Complete Interrupt Control

DATA_CPL Data Transfer Complete in Hardware Triggered Refresh Mode Interrupt Control

CMD_CPL Command Transfer Complete in Hardware Trigger Refresh Mode Interrupt Control

LCD +0008h LCD Interface Interrupt Status Register LCD_INTSTA

Bit	15	14	13	12	11	10	9	8	7	6	5	4	3	2	1	0
Name														CMD_CPL	DATA_CPL	CPL
Type														R	R	R
Reset														0	0	0

CPL LCD Frame Transfer Complete Interrupt

DATA_CPL Data Transfer Complete in Hardware Triggered Refresh Mode Interrupt

CMD_CPL Command Transfer Complete in Hardware Triggered Refresh Mode Interrupt

LCD +000Ch LCD Interface Frame Transfer Register LCD_START

Bit	15	14	13	12	11	10	9	8	7	6	5	4	3	2	1	0
Name	START															
Type	R/W															
Reset	0															

START Start Control of LCD Frame Transfer

LCD +0010h LCD Parallel/Serial Interface Reset Register LCD_RSTB

Bit	15	14	13	12	11	10	9	8	7	6	5	4	3	2	1	0
Name																RSTB
Type																R/W
Reset																1

RSTB Parallel/Serial LCD Module Reset Control

LCD +0014h LCD Serial Interface Configuration Register LCD _SCNF

Bit	15	14	13	12	11	10	9	8	7	6	5	4	3	2	1	0
Name	26M	13M					CSP1	CSP0				8/9	DIV		SPH	SPO

MTK Confidential Release for Konka

Type	R/W	R/W					R/W	R/W				R/W	R/W	R/W	R/W
Type	0	0					0	0				0	0	0	0

SPO Clock Polarity Control
SPH Clock Phase Control
DIV Serial Clock Divide Select Bits
8/9 8-bit or 9-bit Interface Selection
CSP0 Serial Interface Chip Select 0 Polarity Control
CSP1 Serial Interface Chip Select 1 Polarity Control

LCD +0018h LCD Parallel Interface Configuration Register 0 LCD_PCNF0

Bit	31	30	29	28	27	26	25	24	23	22	21	20	19	18	17	16
Name	C2WS		C2WH		C2RS										DW	
Type	R/W		R/W		R/W										R/W	
	0		0		0										0	
Bit	15	14	13	12	11	10	9	8	7	6	5	4	3	2	1	0
Name	26M	13M		WST								RLT				
Type	R/W	R/W		R/W								R/W				
Reset	0	0		0								0				

RLT Read Latency Time
WST Write Wait State Time
13M Enable 13MHz clock gating.
26M Enable 26MHz clock gating.
DW Data width of the parallel interface.
- **00** 8-bit.
- **01** 9-bit
- **10** 16-bit
- **11** 18-bit

C2RS Chip Select (LPCE#) to Read Strobe (LRD#) Setup Time
C2WH Chip Select (LPCE#) to Write Strobe (LWR#) Hold Time
C2WS Chip Select (LPCE#) to Write Strobe (LWR#) Setup Time

LCD +001Ch LCD Parallel Interface Configuration Register 1 LCD_PCNF1

Bit	31	30	29	28	27	26	25	24	23	22	21	20	19	18	17	16
Name	C2WS		C2WH		C2RS										DW	
Type	R/W		R/W		R/W										R/W	
	0		0		0										0	
Bit	15	14	13	12	11	10	9	8	7	6	5	4	3	2	1	0
Name	26M	13M		WST								RLT				
Type	R/W	R/W		R/W								R/W				
Reset	0	0		0								0				

RLT Read Latency Time
WST Write Wait State Time
13M Enable 13MHz clock gating.
26M Enable 26MHz clock gating.
DW Data width of the parallel interface.
- **00** 8-bit.
- **01** 9-bit
- **10** 16-bit
- **11** 18-bit

C2RS Chip Select (LPCE#) to Read Strobe (LRD#) Setup Time

MTK Confidential Release for Konka

C2WH Chip Select (LPCE#) to Write Strobe (LWR#) Hold Time
C2WS Chip Select (LPCE#) to Write Strobe (LWR#) Setup Time

LCD +0020h LCD Parallel Interface Configuration Register 2 LCD_PCNF2

Bit	31	30	29	28	27	26	25	24	23	22	21	20	19	18	17	16
Name	C2WS		C2WH		C2RS										DW	
Type	R/W		R/W		R/W										R/W	
	0		0		0										0	
Bit	15	14	13	12	11	10	9	8	7	6	5	4	3	2	1	0
Name	26M	13M		WST								RLT				
Type	R/W	R/W		R/W								R/W				
Reset	0	0		0								0				

RLT Read Latency Time
WST Write Wait State Time
13M Enable 13MHz clock gating.
26M Enable 26MHz clock gating.
DW Data width of the parallel interface.
- **00** 8-bit.
- **01** 9-bit
- **10** 16-bit
- **11** 18-bit

C2RS Chip Select (LPCE#) to Read Strobe (LRD#) Setup Time
C2WH Chip Select (LPCE#) to Write Strobe (LWR#) Hold Time
C2WS Chip Select (LPCE#) to Write Strobe (LWR#) Setup Time

LCD +4000h LCD Parallel 0 Interface Data LCD_PDAT0

Bit	31	30	29	28	27	26	25	24	23	22	21	20	19	18	17	16
Name	DATA[31:16]															
Type	R/W															
Bit	15	14	13	12	11	10	9	8	7	6	5	4	3	2	1	0
Name	DATA[15:0]															
Type	R/W															

DATA Writing to LCD+4000 will drive LPA0 low when sending this data out in parallel BANK0, while writing to LCD+4100 will drive LPA0 high.

LCD +5000h LCD Parallel 1 Interface Data LCD_PDAT1

Bit	31	30	29	28	27	26	25	24	23	22	21	20	19	18	17	16
Name	DATA[31:16]															
Type	R/W															
Bit	15	14	13	12	11	10	9	8	7	6	5	4	3	2	1	0
Name	DATA[15:0]															
Type	R/W															

DATA Writing to LCD+5000 will drive LPA1 low when sending this data out in parallel BANK1, while writing to LCD+5100 will drive LPA1 high

LCD +6000h LCD Parallel 2 Interface Data LCD_PDAT2

Bit	31	30	29	28	27	26	25	24	23	22	21	20	19	18	17	16
Name	DATA[31:16]															
Type	R/W															
Bit	15	14	13	12	11	10	9	8	7	6	5	4	3	2	1	0
Name	DATA[15:0]															
Type	R/W															

MTK Confidential Release for Konka

DATA Writing to LCD+6000 will drive LPA2 low when sending this data out in parallel BANK2, while writing to LCD+6100 will drive LPA2 high

LCD +8000/8100h LCD Serial Interface 1 Data LCD_SDAT1

Bit	15	14	13	12	11	10	9	8	7	6	5	4	3	2	1	0
Name									DATA							
Type									W							

DATA Writing to LCD+8000 will drive LSA0 low while sending this data out in serial BANK1, while writing to LCD+8100 will drive LSA0 high

LCD +9000/9100h LCD Serial Interface 0 Data LCD_SDAT0

Bit	15	14	13	12	11	10	9	8	7	6	5	4	3	2	1	0
Name									DATA							
Type									W							

DATA Writing to LCD+9000 will drive LSA0 low while sending this data out in serial BANK0, while writing to LCD+9100 will drive LSA0 high

LCD +0040h Main Window Size Register LCD_MWINSIZE

Bit	31	30	29	28	27	26	25	24	23	22	21	20	19	18	17	16
Name							ROW									
Type							R/W									
Bit	15	14	13	12	11	10	9	8	7	6	5	4	3	2	1	0
Name							COLUMN									
Type							R/W									

COLUMN 10-bit Virtual Image Window Column Size

ROW 10-bit Virtual Image Window Row Size

LCD +0044h Region of Interest Window Write to Memory Offset Register LCD_WROI_W2MOFS

Bit	31	30	29	28	27	26	25	24	23	22	21	20	19	18	17	16
Name							Y-OFFSET									
Type							R/W									
Bit	15	14	13	12	11	10	9	8	7	6	5	4	3	2	1	0
Name							X-OFFSET									
Type							R/W									

This control register is used to specify the offset of the ROI window from the LCD_WROI_W2MADDR when writing the ROI window's content to memory.

X-OFFSET the x offset of ROI window in the destination memory.

Y-OFFSET the y offset of ROI window in the destination memory.

LCD +0048h Region of Interest Window Write to Memory Control Register LCD_WROI_W2MOON

Bit	15	14	13	12	11	10	9	8	7	6	5	4	3	2	1	0
Name														DISCON	W2M_FORMAT	W2LCM
Type														R/W	R/W	R/W
Reset														0	0	0

MTK Confidential Release for Konka

This control register is effective only when the W2M bit is set in LCD_WROICON register.

W2LCM Write to LCM simultaneously.

W2M_FORMAT Write to memory format.

0 RGB565

1 RGB888

DISCON Block Write Enable Control. By setting both DISCON and W2M to 1, the LCD controller will write out the ROI pixel data as a part of MAIN window, using the width of MAIN window to calculate the write-out address. If this bit is not set, the ROI window will be written to memory in continuous addresses.

LCD +004Ch Region of Interest Window Write to Memory Address Register LCD_WROI_W2MADD

Bit	31	30	29	28	27	26	25	24	23	22	21	20	19	18	17	16
Name	W2M_ADDR															
Type	R/W															
Bit	15	14	13	12	11	10	9	8	7	6	5	4	3	2	1	0
Name	W2M_ADDR															
Type	R/W															

W2M_ADDR Write to memory address.

LCD +0050h Region of Interest Window Control Register LCD_WROICON

Bit	31	30	29	28	27	26	25	24	23	22	21	20	19	18	17	16
Name	EN0	EN1	EN2	EN3	EN4	EN5	PERIOD									
Type	R/W	R/W	R/W	R/W	R/W	R/W	R/W									
Bit	15	14	13	12	11	10	9	8	7	6	5	4	3	2	1	0
Name	ENC	W2M	COMMAND									FORMAT				
Type	R/W	R/W	R/W									R/W				

FORMAT LCD Module Data Format

Bit 0 : in BGR sequence, otherwise in RGB sequence.

Bit 1 : LSB first, otherwise MSB first.

Bit 2 : padding bits on MSBs, otherwise on LSBs.

Bit 5-3 : 000 for RGB332, 001 for RGB444, 010 for RGB565, 011 for RGB666, 100 for RGB888.

Bit 7-6 : 00 for 8-bit interface, 01 for 16-bit interface, 10 for 9-bit interface, 11 for 18-bit interface.

Note: When the interface is configured as 9 bit or 18 bit, the field of bit5-2 is ignored.

00000000	8bit	1cycle/1pixel	RGB3.3.2	RRRGGGBB
00000001		1cycle/1pixel	RGB3.3.2	BBGGGRRR
00001000		3cycle/2pixel	RGB4.4.4	RRRRGGGG BBBBRRRR GGGGBBBB
00001011		3cycle/2pixel	RGB4.4.4	GGGGRRRR RRRRBBBB BBBBGGGG
00010000		2cycle/1pixel	RGB5.6.5	RRRRRGGG GGGBBBBB
00010011		2cycle/1pixel	RGB5.6.5	GGGRRRRR BBBBBGGG
00011000		3cycle/1pixel	RGB6.6.6	RRRRRRXX

MTK Confidential Release for Konka

				GGGGGGXX BBBBBBXX
00011100		3cycle/1pixel	RGB6.6.6	XXRRRRRR XXGGGGGG XXBBBBBB
00100000		3cycle/1pixel	RGB8.8.8	RRRRRRRR GGGGGGGG BBBBBBBB
10011000	9bit	2cycle/1pixel	RGB6.6.6	RRRRRRGGG GGGBBBBBB
10011011		2cycle/1pixel	RGB6.6.6	GGGRRRRRR BBBBBBGGG
01000000	16bit	1cycle/2pixel	RGB3.3.2	RRRGGGBBRRRGGGBB
01000010		1cycle/2pixel	RGB3.3.2	RRRGGGBBRRRGGGBB
01000001		1cycle/2pixel	RGB3.3.2	BBGGGRRRBBGGGRRR
01000011		1cycle/2pixel	RGB3.3.2	BBGGGRRRBBGGGRRR
01001100		1cycle/1pixel	RGB4.4.4	XXXXRRRRGGGGBBBB
01001101		1cycle/1pixel	RGB4.4.4	XXXXBBBBGGGGRRRR
01001000		1cycle/1pixel	RGB4.4.4	RRRRGGGGBBBBXXXX
01001001		1cycle/1pixel	RGB4.4.4	BBBBGGGGRRRRXXXX
01010000		1cycle/1pixel	RGB5.6.5	RRRRRGGGGGGBBBBB
01010001		1cycle/1pixel	RGB5.6.5	BBBBBGGGGGGRRRRR
01011100		3cycle/2pixel	RGB6.6.6	XXXXRRRRRRGGGGGG XXXXBBBBBBRRRRRR XXXXGGGGGGBBBBBB
01011111		3cycle/2pixel	RGB6.6.6	XXXXGGGGGGRRRRRR XXXXRRRRRRBBBBBB XXXXBBBBBBGGGGGG
01011000		3cycle/2pixel	RGB6.6.6	RRRRRRGGGGGGXXXX BBBBBBRRRRRRXXXX GGGGGGBBBBBBXXXX
01011011		3cycle/2pixel	RGB6.6.6	GGGGGGRRRRRRXXXX RRRRRRBBBBBBXXXX BBBBBBGGGGGGXXXX
01100000		3cycle/2pixel	RGB8.8.8	RRRRRRRRGGGGGGGG BBBBBBBBRRRRRRRR GGGGGGGGBBBBBBBB
01100011		3cycle/2pixel	RGB8.8.8	GGGGGGGGRRRRRRRR RRRRRRRRBBBBBBBB BBBBBBBBRRRRRRRR
11011000	18bit	1cycle/1pixel	RGB6.6.6	RRRRRRGGGGGGBBBBBB
11011001		1cycle/1pixel	RGB6.6.6	BBBBBBGGGGGGRRRRRR

COMMAND Number of Commands to be sent to LCD module. Maximum is 63.

W2M Enable Data Address Increasing After Each Data Transfer

ENC Command Transfer Enable Control

PERIOD Waiting period between two consecutive transfers, effective for both data and command.

ENn Layer Window Enable Control

MTK Confidential Release for Konka

LCD +0054h Region of Interest Window Offset Register LCD_WROIOFS

Bit	31	30	29	28	27	26	25	24	23	22	21	20	19	18	17	16
Name							Y-OFFSET									
Type							R/W									
Bit	15	14	13	12	11	10	9	8	7	6	5	4	3	2	1	0
Name							X-OFFSET									
Type							R/W									

X-OFFSET ROI Window Column Offset

Y-OFFSET ROI Window Row Offset

LCD +0058h Region of Interest Window Command Start Address Register LCD_WROICADD

Bit	15	14	13	12	11	10	9	8	7	6	5	4	3	2	1	0
Name	ADDR															
Type	R/W															

ADDR ROI Window Command Address. Only writing to LCD modules is allowed.

LCD +005Ch Region of Interest Window Data Start Address Register LCD_WROIDADD

Bit	15	14	13	12	11	10	9	8	7	6	5	4	3	2	1	0
Name	ADDR															
Type	R/W															

ADDR ROI Window Data Address Only writing to LCD modules is allowed.

LCD +0060h Region of Interest Window Size Register LCD_WROISIZE

Bit	31	30	29	28	27	26	25	24	23	22	21	20	19	18	17	16
Name							ROW									
Type							R/W									
Bit	15	14	13	12	11	10	9	8	7	6	5	4	3	2	1	0
Name							COLUMN									
Type							R/W									

COLUMN ROI Window Column Size (width)

ROW ROI Window Row Size (height)

LCD +0064h Region of Interest Window Hardware Refresh Register LCD_WROI_HWREF

Bit	31	30	29	28	27	26	25	24	23	22	21	20	19	18	17	16
Name	EN0	EN1	EN2	EN3	EN4	EN5			IMGDMA0	IMGDMA1	IMGDMA2	IMGDMA3	IMGDMA4	IMGDMA5		
Type	R/W	R/W	R/W	R/W	R/W	R/W			R/W	R/W	R/W	R/W	R/W	R/W		
Reset	0	0	0	0	0	0			0	0	0	0	0	0		
Bit	15	14	13	12	11	10	9	8	7	6	5	4	3	2	1	0
Name	IMGDMA_SEL0	IMGDMA_SEL1	IMGDMA_SEL2	IMGDMA_SEL3	IMGDMA_SEL4	IMGDMA_SEL5			HWEN							HWREF
Type	R/W	R/W	R/W	R/W	R/W	R/W			R/W							R/W
Reset	0	0	0	0	0	0			0							0

EN*n* Enable layer n source address from Image_DMA.

IMGDMA*n* Enable layer n source data from Image_DMA.

IMGDMA_SELn Select layer n read from Image_DMA0 or Image_DMA1.

MTK Confidential Release for Konka

0 Image_DMA0.

1 Image_DMA1

HWEN Enable hardware triggered LCD fresh.

HWREF Starting the hardware triggered LCD frame transfer.

LCD +0068h Region of Interest Background Color Register

LCD_WROI_BGCLR

Bit	31	30	29	28	27	26	25	24	23	22	21	20	19	18	17	16
Name									RED[7:0]							
Type									R/W							
Reset									1111_1111							
Bit	15	14	13	12	11	10	9	8	7	6	5	4	3	2	1	0
Name	GREEN[7:0]								BLUE[7:0]							
Type	R/W								R/W							
Reset	1111_1111								1111_1111							

RED Red component of ROI window's background color

GREEN Green component of ROI window's background color

BLUE Blue component of ROI window's background color

LCD +0070h Layer 0 Window Control Register

LCD_L0WINCON

Bit	31	30	29	28	27	26	25	24	23	22	21	20	19	18	17	16
Name																SWP
Type																R/W
Bit	15	14	13	12	11	10	9	8	7	6	5	4	3	2	1	0
Name	SRC	KEYEN	ROTATE			CLRDPT		OPAEN	OPA							
Type	R/W	R/W	R/W			R/W		R/W	R/W							

OPA Opacity value, used as constant alpha value.

OPAEN Opacity enabled

CLRDPT Color format

- **00** 8bpp indexed color.
- **01** RGB 565
- **10** ARGB 8888
- **11** RGB 888

ROTATE Rotation Configuration

- **000** 0 degree rotation
- **001** 90 degree rotation anti-counterclockwise
- **010** 180 degree rotation anti-counterclockwise
- **011** 270 degree rotation anti-counterclockwise
- **100** Horizontal flip
- **101** Horizontal flip then 90 degree rotation anti-counterclockwise
- **110** Horizontal flip then 180 degree rotation anti-counterclockwise
- **111** Horizontal flip then 270 degree rotation anti-counterclockwise

KEYEN Source Key Enable Control

SRC Disable auto-increment of the source pixel address

SWP Swap high byte and low byte of pixel data

MTK Confidential Release for Konka

LCD +0074h Layer 0 Source Color Key Register

LCD_L0WINSKEY

Bit	31	30	29	28	27	26	25	24	23	22	21	20	19	18	17	16
Name	SRCKEY[31:16]															
Type	R/W															
Bit	15	14	13	12	11	10	9	8	7	6	5	4	3	2	1	0
Name	SRCKEY[15:0]															
Type	R/W															

SRCKEY Transparent color key of the source image.

LCD +0078h Layer 0 Window Display Offset Register

LCD_L0WINOFS

Bit	31	30	29	28	27	26	25	24	23	22	21	20	19	18	17	16
Name							Y-OFFSET									
Type							R/W									
Bit	15	14	13	12	11	10	9	8	7	6	5	4	3	2	1	0
Name							X-OFFSET									
Type							R/W									

Y-OFFSET Layer 0 Window Row Offset

X-OFFSET Layer 0 Window Column Offset

LCD+007Ch Layer 0 Window Display Start Address Register

LCD_L0WINADD

Bit	31	30	29	28	27	26	25	24	23	22	21	20	19	18	17	16
Name	ADDR															
Type	R/W															
Bit	15	14	13	12	11	10	9	8	7	6	5	4	3	2	1	0
Name	ADDR															
Type	R/W															

ADDR Layer 0 Window Data Address

LCD +0080h Layer 0 Window Size

LCD_L0WINSIZE

Bit	31	30	29	28	27	26	25	24	23	22	21	20	19	18	17	16
Name							ROW									
Type							R/W									
Bit	15	14	13	12	11	10	9	8	7	6	5	4	3	2	1	0
Name							COLUMN									
Type							R/W									

ROW Layer 0 Window Row Size

COLUMN Layer 0 Window Column Size

LCD +0090h Layer 1 Window Control Register

LCD_L1WINCON

Bit	31	30	29	28	27	26	25	24	23	22	21	20	19	18	17	16
Name																SWP
Type																R/W
Bit	15	14	13	12	11	10	9	8	7	6	5	4	3	2	1	0
Name	SRC	KEYEN	ROTATE			CLRDPT		OPAEN	OPA							
Type	R/W	R/W	R/W			R/W		R/W	R/W							

MTK Confidential Release for Konka

OPA Opacity value, used as constant alpha value.
OPAEN Opacity enabled
CLRDPT Color format
- **00** 8bpp indexed color.
- **01** RGB 565
- **10** ARGB 8888
- **11** RGB 888

ROTATE Rotation Configuration
- **000** 0 degree rotation
- **001** 90 degree rotation anti-counterclockwise
- **010** 180 degree rotation anti-counterclockwise
- **011** 270 degree rotation anti-counterclockwise
- **100** Horizontal flip
- **101** Horizontal flip then 90 degree rotation anti-counterclockwise
- **110** Horizontal flip then 180 degree rotation anti-counterclockwise
- **111** Horizontal flip then 270 degree rotation anti-counterclockwise

KEYEN Source Key Enable Control
SRC Disable auto-increment of the source pixel address
SWP Swap high byte and low byte of pixel data

LCD +0094h Layer 1 Source Color Key Register — LCD_L1WINSKEY

Bit	31	30	29	28	27	26	25	24	23	22	21	20	19	18	17	16
Name	SRCKEY[31:16]															
Type	R/W															
Bit	15	14	13	12	11	10	9	8	7	6	5	4	3	2	1	0
Name	SRCKEY[15:0]															
Type	R/W															

SRCKEY Transparent color key of the source image.

LCD +0098h Layer 1 Window Display Offset Register — LCD_L1WINOFS

Bit	31	30	29	28	27	26	25	24	23	22	21	20	19	18	17	16
Name							Y-OFFSET									
Type							R/W									
Bit	15	14	13	12	11	10	9	8	7	6	5	4	3	2	1	0
Name							X-OFFSET									
Type							R/W									

Y-OFFSET Layer 1 Window Row Offset
X-OFFSET Layer 1 Window Column Offset

LCD+009Ch Layer 1 Window Display Start Address Register — LCD_L1WINADD

Bit	31	30	29	28	27	26	25	24	23	22	21	20	19	18	17	16
Name	ADDR															
Type	R/W															
Bit	15	14	13	12	11	10	9	8	7	6	5	4	3	2	1	0
Name	ADDR															
Type	R/W															

MTK Confidential Release for Konka

ADDR Layer 1 Window Data Address

LCD +00A0h Layer 1 Window Size

LCD_L1WINSIZE

Bit	31	30	29	28	27	26	25	24	23	22	21	20	19	18	17	16
Name							ROW									
Type							R/W									
Bit	15	14	13	12	11	10	9	8	7	6	5	4	3	2	1	0
Name							COLUMN									
Type							R/W									

ROW Layer 1 Window Row Size

COLUMN Layer 1 Window Column Size

LCD +00B0h Layer 2 Window Control Register

LCD_L2WINCON

Bit	31	30	29	28	27	26	25	24	23	22	21	20	19	18	17	16
Name																SWP
Type																R/W
Bit	15	14	13	12	11	10	9	8	7	6	5	4	3	2	1	0
Name	SRC	KEYEN	ROTATE			CLRDPT		OPAEN	OPA							
Type	R/W	R/W	R/W			R/W		R/W	R/W							

OPA Opacity value, used as constant alpha value.

OPAEN Opacity enabled

CLRDPT Color format

- **00** 8bpp indexed color.
- **01** RGB 565
- **10** ARGB 8888
- **11** RGB 888

ROTATE Rotation Configuration

- **000** 0 degree rotation
- **001** 90 degree rotation anti-counterclockwise
- **010** 180 degree rotation anti-counterclockwise
- **011** 270 degree rotation anti-counterclockwise
- **100** Horizontal flip
- **101** Horizontal flip then 90 degree rotation anti-counterclockwise
- **110** Horizontal flip then 180 degree rotation anti-counterclockwise
- **111** Horizontal flip then 270 degree rotation anti-counterclockwise

KEYEN Source Key Enable Control

SRC Disable auto-increment of the source pixel address

SWP Swap high byte and low byte of pixel data

LCD +00B4h Layer 2 Source Color Key Register

LCD_L2WINSKEY

Bit	31	30	29	28	27	26	25	24	23	22	21	20	19	18	17	16
Name	SRCKEY[31:16]															
Type	R/W															
Bit	15	14	13	12	11	10	9	8	7	6	5	4	3	2	1	0
Name	SRCKEY[15:0]															
Type	R/W															

MTK Confidential Release for Konka

SRCKEY Transparent color key of the source image.

LCD +00B8h Layer 2 Window Display Offset Register

LCD_L2WINOFS

Bit	31	30	29	28	27	26	25	24	23	22	21	20	19	18	17	16
Name							Y-OFFSET									
Type							R/W									
Bit	15	14	13	12	11	10	9	8	7	6	5	4	3	2	1	0
Name							X-OFFSET									
Type							R/W									

Y-OFFSET Layer 2 Window Row Offset

X-OFFSET Layer 2 Window Column Offset

LCD+00BCh Layer 2 Window Display Start Address Register

LCD_L2WINADD

Bit	31	30	29	28	27	26	25	24	23	22	21	20	19	18	17	16
Name	ADDR															
Type	R/W															
Bit	15	14	13	12	11	10	9	8	7	6	5	4	3	2	1	0
Name	ADDR															
Type	R/W															

ADDR Layer 1 Window Data Address

LCD +00C0h Layer 2 Window Size

LCD_L2WINSIZE

Bit	31	30	29	28	27	26	25	24	23	22	21	20	19	18	17	16
Name							ROW									
Type							R/W									
Bit	15	14	13	12	11	10	9	8	7	6	5	4	3	2	1	0
Name							COLUMN									
Type							R/W									

ROW Layer 2 Window Row Size

COLUMN Layer 2 Window Column Size

LCD +00D0h Layer 3 Window Control Register

LCD_L3WINCON

Bit	31	30	29	28	27	26	25	24	23	22	21	20	19	18	17	16
Name																SWP
Type																R/W
Bit	15	14	13	12	11	10	9	8	7	6	5	4	3	2	1	0
Name	SRC	KEYEN	ROTATE			CLRDPT		OPAEN	OPA							
Type	R/W	R/W	R/W			R/W		R/W	R/W							

OPA Opacity value, used as constant alpha value.

OPAEN Opacity enabled

CLRDPT Color format

- **00** 8bpp indexed color.
- **01** RGB 565
- **10** ARGB 8888
- **11** RGB 888

ROTATE Rotation Configuration

MTK Confidential Release for Konka

000 0 degree rotation
001 90 degree rotation anti-counterclockwise
010 180 degree rotation anti-counterclockwise
011 270 degree rotation anti-counterclockwise
100 Horizontal flip
101 Horizontal flip then 90 degree rotation anti-counterclockwise
110 Horizontal flip then 180 degree rotation anti-counterclockwise
111 Horizontal flip then 270 degree rotation anti-counterclockwise

KEYEN Source Key Enable Control
SRC Disable auto-increment of the source pixel address
SWP Swap high byte and low byte of pixel data

LCD +00D4h Layer 3 Source Color Key Register

LCD_L3WINSKEY

Bit	31	30	29	28	27	26	25	24	23	22	21	20	19	18	17	16
Name	SRCKEY[31:16]															
Type	R/W															
Bit	15	14	13	12	11	10	9	8	7	6	5	4	3	2	1	0
Name	SRCKEY[15:0]															
Type	R/W															

SRCKEY Transparent color key of the source image.

LCD +00D8h Layer 3 Window Display Offset Register

LCD_L3WINOFS

Bit	31	30	29	28	27	26	25	24	23	22	21	20	19	18	17	16
Name							Y-OFFSET									
Type							R/W									
Bit	15	14	13	12	11	10	9	8	7	6	5	4	3	2	1	0
Name							X-OFFSET									
Type							R/W									

Y-OFFSET Layer 3 Window Row Offset
X-OFFSET Layer 3 Window Column Offset

LCD+00DCh Layer 3 Window Display Start Address Register

LCD_L3WINADD

Bit	31	30	29	28	27	26	25	24	23	22	21	20	19	18	17	16
Name	ADDR															
Type	R/W															
Bit	15	14	13	12	11	10	9	8	7	6	5	4	3	2	1	0
Name	ADDR															
Type	R/W															

ADDR Layer 3 Window Data Address

LCD +00E0h Layer 3 Window Size

LCD_L3WINSIZE

Bit	31	30	29	28	27	26	25	24	23	22	21	20	19	18	17	16
Name							ROW									
Type							R/W									
Bit	15	14	13	12	11	10	9	8	7	6	5	4	3	2	1	0
Name							COLUMN									
Type							R/W									

MTK Confidential Release for Konka

ROW Layer 3 Window Row Size
COLUMN Layer 3 Window Column Size

LCD +00F0h Layer 4 Window Control Register

LCD_L4WINCON

Bit	31	30	29	28	27	26	25	24	23	22	21	20	19	18	17	16
Name																SWP
Type																R/W
Bit	15	14	13	12	11	10	9	8	7	6	5	4	3	2	1	0
Name	SRC	KEYEN	ROTATE			CLRDPT		OPAEN	OPA							
Type	R/W	R/W	R/W			R/W		R/W	R/W							

OPA Opacity value, used as constant alpha value.
OPAEN Opacity enabled
CLRDPT Color format
- **00** 8bpp indexed color.
- **01** RGB 565
- **10** ARGB 8888
- **11** RGB 888

ROTATE Rotation Configuration
- **000** 0 degree rotation
- **001** 90 degree rotation anti-counterclockwise
- **010** 180 degree rotation anti-counterclockwise
- **011** 270 degree rotation anti-counterclockwise
- **100** Horizontal flip
- **101** Horizontal flip then 90 degree rotation anti-counterclockwise
- **110** Horizontal flip then 180 degree rotation anti-counterclockwise
- **111** Horizontal flip then 270 degree rotation anti-counterclockwise

KEYEN Source Key Enable Control
SRC Disable auto-increment of the source pixel address
SWP Swap high byte and low byte of pixel data

LCD +00F4h Layer 4 Source Color Key Register

LCD_L4WINSKEY

Bit	31	30	29	28	27	26	25	24	23	22	21	20	19	18	17	16
Name	SRCKEY[31:16]															
Type	R/W															
Bit	15	14	13	12	11	10	9	8	7	6	5	4	3	2	1	0
Name	SRCKEY[15:0]															
Type	R/W															

SRCKEY Transparent color key of the source image.

LCD +00F8h Layer 4 Window Display Offset Register

LCD_L4WINOFS

Bit	31	30	29	28	27	26	25	24	23	22	21	20	19	18	17	16
Name							Y-OFFSET									
Type							R/W									
Bit	15	14	13	12	11	10	9	8	7	6	5	4	3	2	1	0
Name							X-OFFSET									
Type							R/W									

MTK Confidential Release for Konka

Y-OFFSET Layer 4 Window Row Offset
X-OFFSET Layer 4 Window Column Offset

LCD+00FCh Layer 4 Window Display Start Address Register

LCD_L4WINADD

Bit	31	30	29	28	27	26	25	24	23	22	21	20	19	18	17	16
Name	ADDR															
Type	R/W															
Bit	15	14	13	12	11	10	9	8	7	6	5	4	3	2	1	0
Name	ADDR															
Type	R/W															

ADDR Layer 4 Window Data Address

LCD +0100h Layer 4 Window Size

LCD_L4WINSIZE

Bit	31	30	29	28	27	26	25	24	23	22	21	20	19	18	17	16
Name							ROW									
Type							R/W									
Bit	15	14	13	12	11	10	9	8	7	6	5	4	3	2	1	0
Name							COLUMN									
Type							R/W									

ROW Layer 4 Window Row Size
COLUMN Layer 4 Window Column Size

LCD +0110h Layer 5 Window Control Register

LCD_L5WINCON

Bit	31	30	29	28	27	26	25	24	23	22	21	20	19	18	17	16
Name																SWP
Type																R/W
Bit	15	14	13	12	11	10	9	8	7	6	5	4	3	2	1	0
Name	SRC	KEYEN	ROTATE			CLRDPT		OPAEN	OPA							
Type	R/W	R/W	R/W			R/W		R/W	R/W							

OPA Opacity value, used as constant alpha value.
OPAEN Opacity enabled
CLRDPT Color format
- **00** 8bpp indexed color.
- **01** RGB 565
- **10** ARGB 8888
- **11** RGB 888

ROTATE Rotation Configuration
- **000** 0 degree rotation
- **001** 90 degree rotation anti-counterclockwise
- **010** 180 degree rotation anti-counterclockwise
- **011** 270 degree rotation anti-counterclockwise
- **100** Horizontal flip
- **101** Horizontal flip then 90 degree rotation anti-counterclockwise
- **110** Horizontal flip then 180 degree rotation anti-counterclockwise
- **111** Horizontal flip then 270 degree rotation anti-counterclockwise

MTK Confidential Release for Konka

KEYEN Source Key Enable Control
SRC Disable auto-increment of the source pixel address
SWP Swap high byte and low byte of pixel data

LCD +0114h Layer 5 Source Color Key Register

LCD_L5WINSKEY

Bit	31	30	29	28	27	26	25	24	23	22	21	20	19	18	17	16
Name	SRCKEY[31:16]															
Type	R/W															
Bit	15	14	13	12	11	10	9	8	7	6	5	4	3	2	1	0
Name	SRCKEY[15:0]															
Type	R/W															

SRCKEY Transparent color key of the source image.

LCD +0118h Layer 5 Window Display Offset Register

LCD_L5WINOFS

Bit	31	30	29	28	27	26	25	24	23	22	21	20	19	18	17	16
Name							Y-OFFSET									
Type							R/W									
Bit	15	14	13	12	11	10	9	8	7	6	5	4	3	2	1	0
Name							X-OFFSET									
Type							R/W									

Y-OFFSET Layer 5 Window Row Offset
X-OFFSET Layer 5 Window Column Offset

LCD+011Ch Layer 5 Window Display Start Address Register

LCD_L5WINADD

Bit	31	30	29	28	27	26	25	24	23	22	21	20	19	18	17	16
Name	ADDR															
Type	R/W															
Bit	15	14	13	12	11	10	9	8	7	6	5	4	3	2	1	0
Name	ADDR															
Type	R/W															

ADDR Layer 5 Window Data Address

LCD +0120h Layer 5 Window Size

LCD_L5WINSIZE

Bit	31	30	29	28	27	26	25	24	23	22	21	20	19	18	17	16
Name							ROW									
Type							R/W									
Bit	15	14	13	12	11	10	9	8	7	6	5	4	3	2	1	0
Name							COLUMN									
Type							R/W									

ROW Layer 5 Window Row Size
COLUMN Layer 5 Window Column Size

LCD +C800h~CBFCh LCD Interface Color Palette LUT Registers

LCD_PAL

Bit	31	30	29	28	27	26	25	24	23	22	21	20	19	18	17	16
Name	LUT															
Type	R/W															

MTK Confidential Release for Konka

Bit	15	14	13	12	11	10	9	8	7	6	5	4	3	2	1	0
Name	LUT															
Type	R/W															

LUT These Bits Set LUT Data in RGB565 Format

LCD +CC00h~CCFC **LCD Interface Command/Parameter Registers** **LCD_COMD**

Bit	31	30	29	28	27	26	25	24	23	22	21	20	19	18	17	16
Name									C0						COMM[17:16]	
Type									R/W						R/W	
Bit	15	14	13	12	11	10	9	8	7	6	5	4	3	2	1	0
Name	COMM[15:0]															
Type	R/W															

COMM Command Data and Parameter Data for LCD Module

C0 Write to ROI Command Address if C0 = 1, otherwise write to ROI Data Address

6.2 NAND FLASH interface

6.2.1 General description

MT6228 provides NAND flash interface.

The NAND FLASH interface support features as follows:

- ECC (Hamming code) acceleration capable of one-bit error correction or two bits error detection.
- Programmable ECC block size. Support 1, 2 or 4 ECC block within a page.
- Word/byte access through APB bus.
- Direct Memory Access for massive data transfer.
- Latch sensitive interrupt to indicate ready state for read, program, erase operation and error report.
- Programmable wait states, command/address setup and hold time, read enable hold time, and write enable recovery time.
- Support page size: 512(528) bytes and 2048(2112) bytes.
- Support 2 chip select for NAND flash parts.
- Support 8/16 bits I/O interface.

The NFI core can automatically generate ECC parity bits when programming or reading the device. If the user approves the way it stores the parity bits in the spare area for each page, the AUTOECC mode can be used. Otherwise, the user can prepare the data (may contains operating system information or ECC parity bits) for the spare area with another arrangement. In the former case, the core can check the parity bits when reading from the device. The ECC module features the hamming code, which is capable of correcting one bit error or detecting two bits error within one ECC block.

MTK Confidential Release for Konka

6.2.2 Register definition

NFI+0000h NAND flash access control register NFI_ACCCON

Bit	15	14	13	12	11	10	9	8	7	6	5	4	3	2	1	0
Name							C2R		W2R		WH		WST		RLT	
Type							R/W		R/W		R/W		R/W		R/W	
Reset							0		0		0		0		0	

This is the timing access control register for the NAND FLASH interface. In order to accommodate operations for different system clock frequency ranges from 13MHz to 52MHz, wait states and setup/hold time margin can be configured in this register.

C2R The field represents the minimum required time from NCEB low to NREB low.

W2R The field represents the minimum required time from NWEB high to NREB low. It's in unit of 2T. So the actual time ranges from 2T to 8T in step of 2T.

WH Write-enable hold-time.

The field specifies the hold time of NALE, NCLE, NCEB signals relative to the rising edge of NWEB. This field is associated with **WST** to expand the write cycle time, and is associated with **RLT** to expand the read cycle time.

RLT Read Latency Time

The field specifies how many wait states to be inserted to meet the requirement of the read access time for the device.

00 No wait state.
01 1T wait state.
10 2T wait state.
11 3T wait state.

WST Write Wait State

The field specifies the wait states to be inserted to meet the requirement of the pulse width of the NWEB signal.

00 No wait state.
01 1T wait state.
10 2T wait state.
11 3T wait state.

NFI +0004h NFI page format control register NFI_PAGEFMT

Bit	15	14	13	12	11	10	9	8	7	6	5	4	3	2	1	0
Name								B16EN		ECCBLKSIZE				ADRMODE	PSIZE	
Type								R/W		R/W				R/W	R/W	
Reset								0		0				0	0	

This register manages the page format of the device. It includes the bus width selection, the page size, the associated address format, and the ECC block size.

B16EN 16 bits I/O bus interface enable.

ECCBLKSIZE ECC block size.

This field represents the size of one ECC block. The hardware-fuelled ECC generation provides 2 or 4 blocks within a single page.

0 ECC block size: 128 bytes. Used for devices with page size equal to 512 bytes.
1 ECC block size: 256 bytes. Used for devices with page size equal to 512 bytes.

MTK Confidential Release for Konka

2 ECC block size: 512 bytes. Used for devices with page size equal to 512 (1 ECC block) or 2048 bytes (4 ECC blocks).

3 ECC block size: 1048 bytes. Used for devices with page size equal to 2048 bytes.

4~ Reserved.

ADRMODE Address mode. This field specifies the input address format.

0 Normal input address mode, in which the half page identifier is not specified in the address assignment but in the command set. As in **Table 37**, A7 to A0 identifies the byte address within half a page, A12 to A9 specifies the page address within a block, and other bits specify the block address. The mode is used mostly for the device with 512 bytes page size.

1 Large size input address mode, in which all address information is specified in the address assignment rather than in the command set. As in **Table 38**, A11 to A0 identifies the byte address within a page. The mode is used for the device with 2048 bytes page size and 8bits I/O interface.

2 Large size input address mode. As in **Table 38**, A10 to A0 identifies the column address within a page. The mode is used for the device with 2048 byte page size and 16bits I/O interface.

	NLD7	**NLD6**	**NLD5**	**NLD4**	**NLD3**	**NLD2**	**NLD1**	**NLD0**
First cycle	A7	A6	A5	A4	A3	A2	A1	A0
Second cycle	A16	A15	A14	A13	A12	A11	A10	A9

Table 37 Page address assignment of the first type (ADRMODE = 0)

	NLD7	**NLD6**	**NLD5**	**NLD4**	**NLD3**	**NLD2**	**NLD1**	**NLD0**
First cycle	A7	A6	A5	A4	A3	A2	A1	A0
Second cycle	0	0	0	0	A11	A10	A9	A8

Table 38 Page address assignment of the second type (ADRMODE = 1 or 2)

PSIZE Page Size.

The field specifies the size of one page for the device. Two most widely used page size are supported.

0 The page size is 512 bytes or 528 bytes (including 512 bytes data area and 16 bytes spare area).

1 The page size is 2048 bytes or 2112 bytes (including 2048 bytes data area and 64 bytes spare area).

2~ Reserved.

NFI +0008h Operation control register NFI_OPCON

Bit	15	14	13	12	11	10	9	8	7	6	5	4	3	2	1	0
Name			NOB					SRD			EWR	ERD			BWR	BRD
Type			W/R					WO			WO	WO			R/W	R/W
Reset			0					0			0	0			0	0

This register controls the burst mode and the single of the data access. In burst mode, the core supposes there are one or more than one page of data to be accessed. On the contrary, in single mode, the core supposes there are only less than 4 bytes of data to be accessed.

BRD *Burst read mode.* Setting this field to be logic-1 enables the data read operation. The NFI core will issue read cycles to retrieve data from the device when the data FIFO is not full or the device is not in the busy state. The NFI core supports consecutive page reading. A page address counter is built in. If the reading reaches to the end of the page, the device will enter the busy state to prepare data of the next page, and the NFI core will automatically pause reading and remain inactive until the device returns to the ready state. The page address counter will restart to count from 0 after the device returns to the ready state and start retrieving data again.

MTK Confidential Release for Konka

BWR *Burst write mode.* Setting to be logic-1 enables the data burst write operation for DMA operation. Actually the NFI core will issue write cycles once if the data FIFO is not empty even without setting this flag. But if DMA is to be utilized, the bit should be enabled. If DMA is not to be utilized, the bit didn't have to be enabled.

ERD *ECC read mode.* Setting to be logic-1 initializes the ECC checking and correcting for the current page. The ECC checking is only valid when a full ECC block has been read.

EWR Setting to be logic-1 initializes the ECC parity generation for the current page. The ECC code generation is only valid when a full ECC block has been programmed.

SRD Setting to be logic-1 initializes the one-shot data read operation. It's mainly used for read ID and read status command, which requires no more than 4 read cycles to retrieve data from the device.

NOB The field represents the number of bytes to be retrieved from the device in single mode, and the number of bytes per AHB transaction in both single and burst mode.

- **0** Read 4 bytes from the device.
- **1** Read 1 byte from the device.
- **2** Read 2 bytes from the device.
- **3** Read 3 bytes from the device.

NFI +000Ch Command register NFI_CMD

Bit	15	14	13	12	11	10	9	8	7	6	5	4	3	2	1	0
Name									CMD							
Type									R/W							
Reset									45							

This is the command input register. The user should write this register to issue a command. Please refer to device datasheet for the command set. The core can issue some associated commands automatically. Please check out register **NFI_CON** for those commands.

CMD Command word.

NFI +0010h Address length register NFI_ADDNOB

Bit	15	14	13	12	11	10	9	8	7	6	5	4	3	2	1	0
Name														ADDR_NOB		
Type														R/W		
Reset														0		

This register represents the number of bytes corresponding to current command. The valid number of bytes ranges from 1 to 5. The address format depends on what device to be used and what commands to be applied. The NFI core is made transparent to those different situations except that the user has to define the number of bytes.
The user should write the target address to the address register **NFI_ADDRL** before programming this register.

ADDR_NOB Number of bytes for the address

NFI +0014h Least significant address register NFI_ADDRL

Bit	31	30	29	28	27	26	25	24	23	22	21	20	19	18	17	16
Name	ADDR3								ADDR2							
Type	R/W								R/W							
Reset	0								0							
Bit	15	14	13	12	11	10	9	8	7	6	5	4	3	2	1	0
Name	ADDR1								ADDR0							
Type	R/W								R/W							
Reset	0								0							

This defines the least significant 4 bytes of the address field to be applied to the device. Since the device bus width is 1 byte, the NFI core arranges the order of address data to be least significant byte first. The user should put the first address byte in the field **ADDR0**, the second byte in the field **ADDR1**, and so on.

MTK Confidential Release for Konka

ADDR3 The fourth address byte.
ADDR2 The third address byte.
ADDR1 The second address byte.
ADDR0 The first address byte.

NFI +0018h Most significant address register NFI_ADDRM

Bit	15	14	13	12	11	10	9	8	7	6	5	4	3	2	1	0
Name									ADDR4							
Type									R/W							
Reset									0							

This register defines the most significant byte of the address field to be applied to the device. The NFI core supports address size up to 5 bytes. Programming this register implicitly indicates that the number of address field is 5. In this case, the NFI core will automatically set the **ADDR_NOB** to 5.

ADDR4 The fifth address byte.

NFI +001Ch Write data buffer NFI_DATAW

Bit	31	30	29	28	27	26	25	24	23	22	21	20	19	18	17	16
Name	DW3								DW2							
Type	R/W								R/W							
Reset	0								0							
Bit	15	14	13	12	11	10	9	8	7	6	5	4	3	2	1	0
Name	DW1								DW0							
Type	R/W								R/W							
Reset	0								0							

This is the write port of the data FIFO. It supports word access. The least significant byte **DW0** is to be programmed to the device first, then **DW1**, and so on.
If the data to be programmed is not word aligned, byte write access will be needed. Instead, the user should use another register **NFI_DATAWB** for byte programming. Writing a word to **NFI_DATAW** is equivalent to writing four bytes **DW0**, **DW1**, **DW2**, **DW3** in order to **NFI_DATAWB**. Be reminded that the word alignment is from the perspective of the user. The device bus is byte-wide. According to the flash's nature, the page address will wrap around once it reaches the end of the page.

DW3 Write data byte 3.
DW2 Write data byte 2.
DW1 Write data byte 1.
DW0 Write data byte 0.

NFI +0020h Write data buffer for byte access NFI_DATAWB

Bit	15	14	13	12	11	10	9	8	7	6	5	4	3	2	1	0
Name									DW0							
Type									R/W							
Reset									0							

This is the write port for the data FIFO for byte access.

DW0 Write data byte.

NFI +0024h Read data buffer NFI_DATAR

Bit	31	30	29	28	27	26	25	24	23	22	21	20	19	18	17	16
Name	DR3								DR2							
Type	RO								RO							
Reset	0								0							

MTK Confidential Release for Konka

Bit	15	14	13	12	11	10	9	8	7	6	5	4	3	2	1	0
Name	DR1								DR0							
Type	RO								RO							
Reset	0								0							

This is the read port of the data FIFO. It supports word access. The least significant byte **DR0** is the first byte read from the device, then **DR1**, and so on.

DR3 Read data byte 3.
DR2 Read data byte 2.
DR1 Read data byte 1.
DR0 Read data byte 0.

NFI +0028h Read data buffer for byte access NFI_DATARB

Bit	15	14	13	12	11	10	9	8	7	6	5	4	3	2	1	0
Name									DR0							
Type									RO							
Reset									0							

This is the read port of the data FIFO for byte access.

NFI +002Ch NFI status NFI_PSTA

Bit	15	14	13	12	11	10	9	8	7	6	5	4	3	2	1	0
Name								BUSY					DATAW	DATAR	ADDR	CMD
Type								RO					R/W	R/W	R/W	R/W
Reset								0*					0	0	0	0

This register represents the NFI core control status including command mode, address mode, data program and read mode. The user should poll this register for the end of those operations.

*The value of **BUSY** bit depends on the GPIO configuration. If GPIO is configured for NAND flash application, the reset value should be 0, which represents that NAND flash is in idle status. When the NAND flash is busy, the value will be 1.

BUSY Synchronized busy signal from the NAND flash. It's read-only.
DATAW The NFI core is in data write mode.
DATAR The NFI core is in data read mode.
ADDR The NFI core is in address mode.
CMD The NFI core is in command mode.

NFI +0030h FIFO control NFI_FIFOCON

Bit	15	14	13	12	11	10	9	8	7	6	5	4	3	2	1	0
Name											RESET	FLUSH	WR_FULL	WR_EMPTY	RD_FULL	RD_EMPTY
Type											WO	WO	RO	RO	RO	RO
Reset											0	0	0	1	0	1

The register represents the status of the data FIFO.

RESET Reset the state machine and data FIFO.
FLUSH Flush the data FIFO.
WR_FULL Data FIFO full in burst write mode.
WR_EMPTY Data FIFO empty in burst write mode.
RD_FULL Data FIFO full in burst read mode.
RD_EMPTY Data FIFO empty in burst read mode.

MTK Confidential Release for Konka

NFI +0034h NFI control NFI_CON

Bit	15	14	13	12	11	10	9	8	7	6	5	4	3	2	1	0
Name	BYTE_RW				MULTIPAGE_CON	READ_CON	PROGRAM_CON	ERASE_CON			SW_PROGSPARE_EN	MULTI_PAGE_RD_EN	AUTOECC_ENC_EN	AUTOECC_DEC_EN	DMA_WR_EN	DMA_RD_EN
Type	R/W				R/W	R/W	R/W	R/W			R/W	R/W	R/W	R/W	R/W	R/W
Reset	0				0	0	0	0			0	0	0	0	0	0

The register controls the DMA and ECC functions. For all field, Setting to be logic-1 represents enabled, while 0 represents disabled.

BYTE_RW Enable APB byte access.

MULTIPAGE_CON This bit represents that the first-cycle command for read operation (00h) can be automatically performed to read the next page automatically. Automatic ECC decoding flag **AUTOECC_DEC_EN** should also be enabled for multiple page access.

READ_CON This bit represents that the second-cycle command for read operation (30h) can be automatically performed.

PROGRAM_CON This bit represents that the second-cycle command for page program operation (10h) can be automatically performed after the data for the entire page (including the spare area) has been written. It should be associated with automatic ECC encoding mode enabled.

ERASE_CON The bit represents that the second-cycle command for block erase operation (D0h) can be automatically performed after the block address is latched.

SW_PROGSPARE_EN If enabled, the NFI core allows the user to program or read the spare area directly. Otherwise, the spare area can be programmed or read by the core.

MULTI_PAGE_RD_EN Multiple page burst read enable. If enabled, the burst read operation could continue through multiple pages within a block. It's also possible and more efficient to associate with DMA scheme to read a sector of data contained within the same block.

AUTOECC_ENC_EN Automatic ECC encoding enable. If enabled, the ECC parity is written automatically to the spare area right after the end of the data area. If **SW_PROGSPARE_EN** is set, however, the mode can't be enabled since the core can't access the spare area.

AUTOECC_DEC_EN Automatic ECC decoding enabled, the error checking and correcting are performed automatically on the data read from the memory and vice versa. If enabled, when the page address reaches the end of the data read of one page, additional read cycles will be issued to retrieve the ECC parity-check bits from the spare area to perform checking and correcting.

DMA_WR_EN This field is used to control the activity of DMA write transfer.

DMA_RD_EN This field is used to control the activity of DMA read transfer.

NFI +0038h Interrupt status register NFI_INTR

Bit	15	14	13	12	11	10	9	8	7	6	5	4	3	2	1	0
Name				BUSY_RETURN	ERR_COR3	ERR_COR2	ERR_COR1	ERR_COR0	ERR_DET3	ERR_DET2	ERR_DET1	ERR_DET0	ERASE_COMPLETE	RESET_COMPLETE	WR_COMPLETE	RD_COMPLETE
Type				RC	RC	RC	RC	RC	RC	RC	RC	RC	RC	RC	RC	RC
Reset				0	0	0	0	0	0	0	0	0	0	0	0	0

The register indicates the status of all the interrupt sources. Read this register will clear all interrupts.

BUSY_RETURN Indicates that the device state returns from busy by inspecting the R/B# pin.

ERR_COR3 Indicates that the single bit error in ECC block 3 needs to be corrected.

ERR_COR2 Indicates that the single bit error in ECC block 2 needs to be corrected.

MTK Confidential Release for Konka

ERR_COR1 Indicates that the single bit error in ECC block 1 needs to be corrected.
ERR_COR0 Indicates that the single bit error in ECC block 0 needs to be corrected.
ERR_DET3 Indicates an uncorrectable error in ECC block 3.
ERR_DET2 Indicates an uncorrectable error in ECC block 2.
ERR_DET1 Indicates an uncorrectable error in ECC block 1.
ERR_DET0 Indicates an uncorrectable error in ECC block 0.
ERASE_COMPLETE Indicates that the erase operation is completed.
RESET_COMPLETE Indicates that the reset operation is completed.
WR_COMPLETE Indicates that the write operation is completed.
RD_COMPLETE Indicates that the single page read operation is completed.

NFI +003Ch Interrupt enable register NFI_INTR_EN

Bit	15	14	13	12	11	10	9	8	7	6	5	4	3	2	1	0
Name	ERR_COR3_EN	ERR_COR2_EN	ERR_COR1_EN		ERR_DET3_EN	ERR_DET2_EN	ERR_DET1_EN			BUSY_RETURN_EN	ERR_COR_EN	ERR_DET_EN	ERASE_COMPLETE_EN	RESET_COMPLETE_EN	WR_COMPLETE_EN	RD_COMPLETE_EN
Type	R/W	R/W	R/W		R/W	R/W	R/W			R/W	R/W	R/W	R/W	R/W	R/W	R/W
Reset	0	0	0		0	0	0			0	0	0	0	0	0	0

This register controls the activity for the interrupt sources.

ERR_COR1_EN The error correction interrupt enable for the 2nd ECC block.
ERR_COR2_EN The error correction interrupt enable for the 3rd ECC block.
ERR_COR3_EN The error correction interrupt enable for the 4th ECC block.
ERR_DET1_EN The error detection interrupt enable for the 2nd ECC block.
ERR_DET2_EN The error detection interrupt enable for the 3rd ECC block.
ERR_DET3_EN The error detection interrupt enable for the 4th ECC block.
BUSY_RETURN_EN The busy return interrupt enable.
ERR_COR_EN The error correction interrupt enable for the 1st ECC block.
ERR_DET_EN The error detection interrupt enable for the 1st ECC block.
ERASE_COMPLETE_EN The erase completion interrupt enable.
RESET_COMPLETE_EN The reset completion interrupt enable.
WR_COMPLETE_EN The single page write completion interrupt enable.
RD_COMPLETE_EN The single page read completion interrupt enable.

NFI+0040h NAND flash page counter NFI_PAGECNTR

Bit	15	14	13	12	11	10	9	8	7	6	5	4	3	2	1	0
Name									CNTR							
Type									R/W							
Reset									0							

The register represents the number of pages that the NFI has read since the issuing of the read command. For some devices, the data can be read consecutively through different pages without the need to issue another read command. The user can monitor this register to know current page count, particularly when read DMA is enabled.

CNTR The page counter.

MTK Confidential Release for Konka

NFI+0044h NAND flash page address counter

NFI_ADDRCNTR

Bit	15	14	13	12	11	10	9	8	7	6	5	4	3	2	1	0
Name					CNTR											
Type					R/W											
Reset					0											

The register represents the current read/write address with respect to initial address input. It counts in unit of byte. In page read and page program operation, the address should be the same as that in the state machine in the target device.

NFI supports the address counter up to 4096 bytes.

CNTR The address count.

NFI +0050h ECC block 0 parity error detect syndrome address

NFI_SYM0_ADDR

Bit	15	14	13	12	11	10	9	8	7	6	5	4	3	2	1	0
Name							SYM									
Type							RO									
Reset							0									

This register identifies the address within ECC block 0 that a single bit error has been detected.

SYM The byte address of the error-correctable bit.

NFI +0054h ECC block 1 parity error detect syndrome address

NFI_SYM1_ADDR

Bit	15	14	13	12	11	10	9	8	7	6	5	4	3	2	1	0
Name							SYM									
Type							RO									
Reset							0									

This register identifies the address within ECC block 1 that a single bit error has been detected.

SYM The byte address of the error-correctable bit.

NFI +0058h ECC block 2 parity error detect syndrome address

NFI_SYM2_ADDR

Bit	15	14	13	12	11	10	9	8	7	6	5	4	3	2	1	0
Name							SYM									
Type							RO									
Reset							0									

This register identifies the address within ECC block 2 that a single bit error has been detected.

SYM The byte address of the error-correctable bit.

NFI +005Ch ECC block 3 parity error detect syndrome address

NFI_SYM3_ADDR

Bit	15	14	13	12	11	10	9	8	7	6	5	4	3	2	1	0
Name							SYM									
Type							RO									
Reset							0									

This register identifies the address within ECC block 3 that a single bit error has been detected.

MTK Confidential Release for Konka

SYM The byte address of the error-correctable bit.

NFI +0060h ECC block 0 parity error detect syndrome word NFI_SYM0_DAT

Bit	31	30	29	28	27	26	25	24	23	22	21	20	19	18	17	16
Name	ED3								ED2							
Type	RO								RO							
Reset	0								0							
Bit	15	14	13	12	11	10	9	8	7	6	5	4	3	2	1	0
Name	ED1								ED0							
Type	RO								RO							
Reset	0								0							

This register represents the syndrome word for the corrected ECC block 0. To correct the error, the user should first read **NFI_ SYM0_ADDR** for the address of the correctable word, and then read **NFI_SYM0_DAT**, directly XOR the syndrome word with the data word to obtain the correct word.

NFI +0064h ECC block 1 parity error detect syndrome word NFI_SYM1_DAT

Bit	31	30	29	28	27	26	25	24	23	22	21	20	19	18	17	16
Name	ED3								ED2							
Type	RO								RO							
Reset	0								0							
Bit	15	14	13	12	11	10	9	8	7	6	5	4	3	2	1	0
Name	ED1								ED0							
Type	RO								RO							
Reset	0								0							

This register represents the syndrome word for the corrected ECC block 0. To correct the error, the user should first read **NFI_ SYM1_ADDR** for the address of the correctable word, and then read **NFI_SYM1_DAT**, directly XOR the syndrome word with the data word to obtain the correct word.

NFI +0068h ECC block 2 parity error detect syndrome word NFI_SYM2_DAT

Bit	31	30	29	28	27	26	25	24	23	22	21	20	19	18	17	16
Name	ED3								ED2							
Type	RO								RO							
Reset	0								0							
Bit	15	14	13	12	11	10	9	8	7	6	5	4	3	2	1	0
Name	ED1								ED0							
Type	RO								RO							
Reset	0								0							

This register represents the syndrome word for the corrected ECC block 0. To correct the error, the user should first read **NFI_ SYM2_ADDR** for the address of the correctable word, and then read **NFI_SYM2_DAT**, directly XOR the syndrome word with the data word to obtain the correct word.

NFI +006Ch ECC block 3 parity error detect syndrome word NFI_SYM3_DAT

Bit	31	30	29	28	27	26	25	24	23	22	21	20	19	18	17	16
Name	ED3								ED2							
Type	RO								RO							
Reset	0								0							
Bit	15	14	13	12	11	10	9	8	7	6	5	4	3	2	1	0
Name	ED1								ED0							
Type	RO								RO							
Reset	0								0							

MTK Confidential Release for Konka

This register represents the syndrome word for the corrected ECC block 0. To correct the error, the user should first read **NFI_ SYM3_ADDR** for the address of the correctable word, and then read **NFI_SYM3_DAT**, directly XOR the syndrome word with the data word to obtain the correct word.\

NFI +0070h NFI ECC error detect indication register NFI_ERRDET

Bit	15	14	13	12	11	10	9	8	7	6	5	4	3	2	1	0
Name													**EBLK 3**	**EBLK 2**	**EBLK 1**	**EBLK 0**
Type													RO	RO	RO	RO
Reset													0	0	0	0

This register identifies the block in which an uncorrectable error has been detected.

NFI +0080h NFI ECC parity word 0 NFI_PAR0

Bit	15	14	13	12	11	10	9	8	7	6	5	4	3	2	1	0
Name										**PAR**						
Type										RO						
Reset										0						

This register represents the ECC parity for the ECC block 0. It's calculated by the NFI core and can be read by the user. It's generated when writing or reading a page.

Register Address	Register Function	Acronym
NFI +0080h	NFI ECC parity word 0	NFI_PAR0
NFI +0084h	NFI ECC parity word 1	NFI_PAR1
NFI +0088h	NFI ECC parity word 2	NFI_PAR2
NFI +008Ch	NFI ECC parity word 3	NFI_PAR3
NFI +0090h	NFI ECC parity word 4	NFI_PAR4
NFI +0094h	NFI ECC parity word 5	NFI_PAR5
NFI +0098h	NFI ECC parity word 6	NFI_PAR6
NFI +009Ch	NFI ECC parity word 7	NFI_PAR7

Table 39 NFI parity bits register table

NFI+0100h NFI device select register NFI_CSEL

Bit	15	14	13	12	11	10	9	8	7	6	5	4	3	2	1	0
Name																**CSEL**
Type																R/W
Reset																0

The register is used to select the target device. It decides which CEB pin to be functional. This is useful while using the high-density device.

CSEL Chip select. The value defaults to 0.

- **0** Device 1 is selected.
- **1** Device 2 is selected.

6.2.3 Device programming sequence

This section lists the program sequences to successfully use any compliant devices.

For block erase

MTK Confidential Release for Konka

1. Enable erase complete interrupt (NFI_INTR_EN = 8h).
2. Write command (NFI_CMD = 60h).
3. Write block address (NFI_ADDR).
4. Set the number of address bytes (NFI_ADDRNOB).
5. Check program status (NFI_PSTA) to see whether the operation has been completed. Omitted if ERASE_CON has been set.
6. Write command (NFI_CMD = D0h). Omitted if ERASE_CON has been set.
7. Check the erase complete interrupt.

For status read

1. Write command (NFI_CMD = 70h).
2. Set single word read for 1 byte (NFI_OPCON = 1100h).
3. Check program status (NFI_PSTA) to see whether the operation has been completed.
4. Read single byte (NFI_DATAR).

For page program

1. Enable write complete interrupt (NFI_INTR_EN = 2h).
2. Set DMA mode, and hardware ECC mode (NFI_CON = Ah).
3. Write command (NFI_CMD = 80h).
4. Write page address (NFI_ADDR).
5. Set the number of address bytes (NFI_ADDRNOB).
6. Set burst write (NFI_OPCON = 2h).
7. In DMA mode, the signal DMA_REQ controls the access. The user can also check the status of the FIFO (NFI_FIFOCON) and write a pre-specified number of data whenever the FIFO is not full and until the end of page is reached.
8. Check program status (NFI_PSTA) to see whether all operation has been completed.
9. Set ECC parities write. Omitted if hardware ECC mode has been set.
10. Check program status (NFI_PSTA) to see whether the above operation has been completed.
11. Write command (NFI_CMD = 10h). Omitted if PROGRAM_CON has been set.
12. Check the program complete interrupt.

For page read

1. Enable busy ready, read complete, ECC correct indicator, and ECC error indicator interrupt. (NFI_INTR_EN = 41h).
2. Set DMA mode, and hardware ECC mode. (NFI_CON = 5h).
3. Write command (NFI_CMD = 00h).
4. Write page address (NFI_ADDR).
5. Set the number of address bytes (NFI_ADDRNOB).

MTK Confidential Release for Konka

6. Check busy ready interrupt.
7. Set burst read (NFI_OPCON = 1h).
8. In DMA mode, the signal DMA_REQ controls the access. The user can also check the status of the FIFO (NFI_FIFOCON) and read a pre-specified number of data whenever the FIFO is not empty and until the end of page is reached.
9. Set ECC parities check. Omitted if hardware ECC mode has been set.
10. Check program status (NFI_PSTA) or check ECC correct and error interrupt.
11. Read the ECC correction or error information.

6.2.4 Device timing control

This section illustrates the timing diagram.

The ideal timing for write access is listed as listed in **Table 40**.

Parameter	Description	Timing specification	Timing at 13MHz (WST, WH) = (0,0)	Timing at 26MHz (WST, WH) = (0,0)	Timing at 52MHz (WST, WH) = (1,0)
T_{WC1}	*Write cycle time*	3T + WST + WH	230.8ns	105.4ns	76.9ns
T_{WC2}	*Write cycle time*	2T + WST + WH	153.9ns	76.9ns	57.7ns
T_{DS}	*Write data setup time*	1T + WST	76.9ns	38.5ns	38.5ns
T_{DH}	*Write data hold time*	1T + WH	76.9ns	38.5ns	19.2ns
T_{WP}	*Write enable time*	1T + WST	76.9ns	38.5ns	38.5ns
T_{WH}	*Write high time*	1T + WH	76.9ns	38.5ns	19.2ns
T_{CLS}	*Command latch enable setup time*	1T	76.9ns	38.5ns	19.2ns
T_{CLH}	*Command latch enable hold time*	1T + WH	76.9ns	38.5ns	19.2ns
T_{ALS}	*Address latch enable setup time*	1T	76.9ns	38.5ns	19.2ns
T_{ALH}	*Address latch enable hold time*	1T + WH	76.9ns	38.5ns	19.23ns
F_{WC}	*Write data rate*	1 / T_{WC2}	6.5Mbytes/s	13Mbytes/s	17.3Mbytes/s

Table 40 Write access timing

MTK Confidential Release for Konka

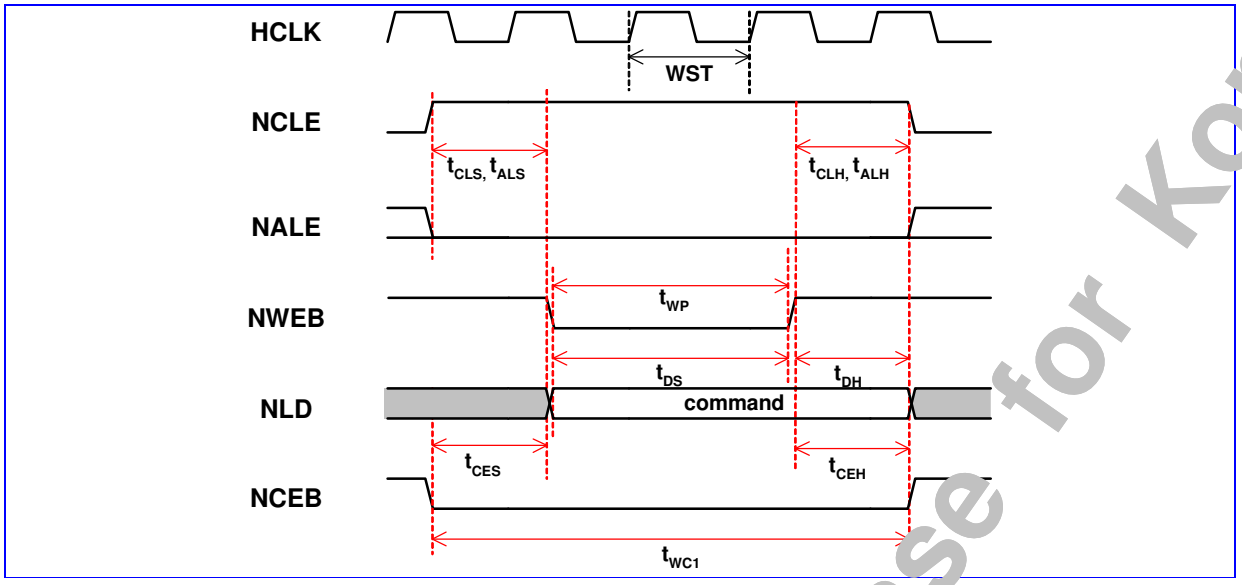

Figure 4 Command input cycle (1 wait state).

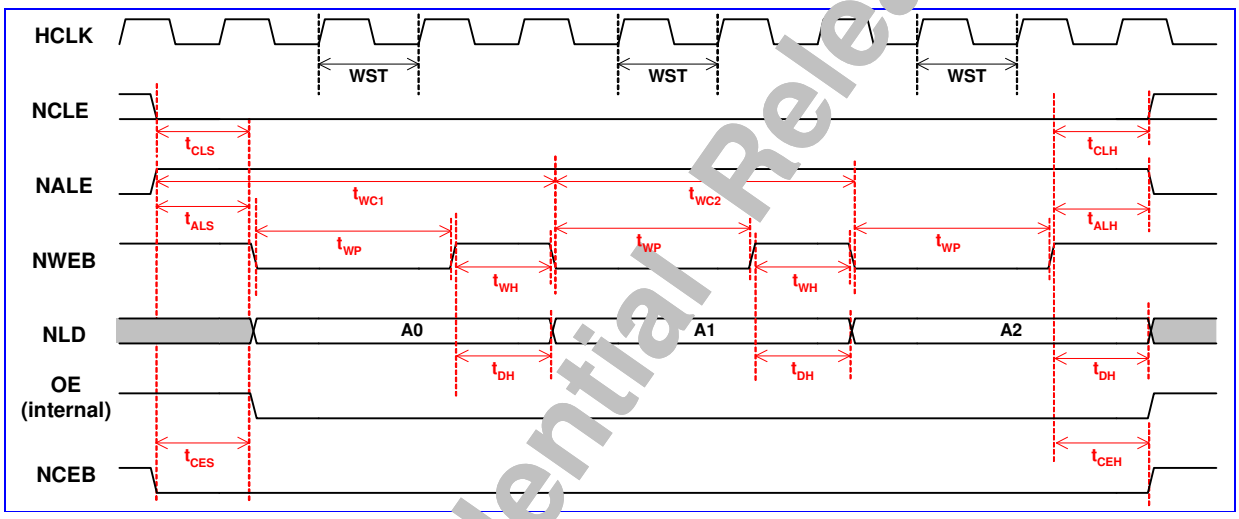

Figure 5 Address input cycle (1 wait state)

MTK Confidential Release for Konka

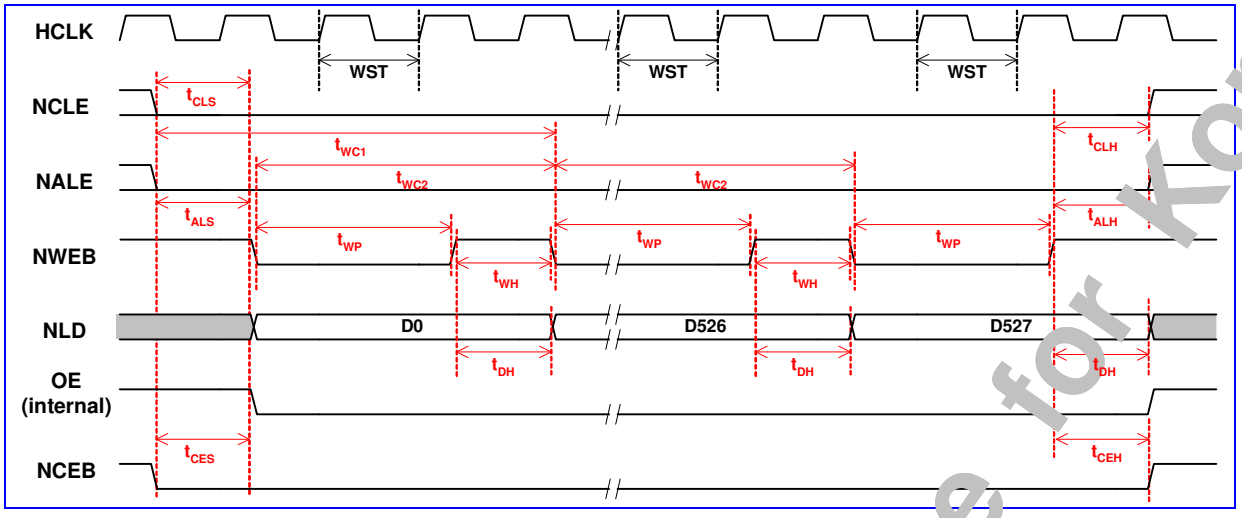

Figure 6 Consecutive data write cycles (1 wait state, 0 hold time extension)

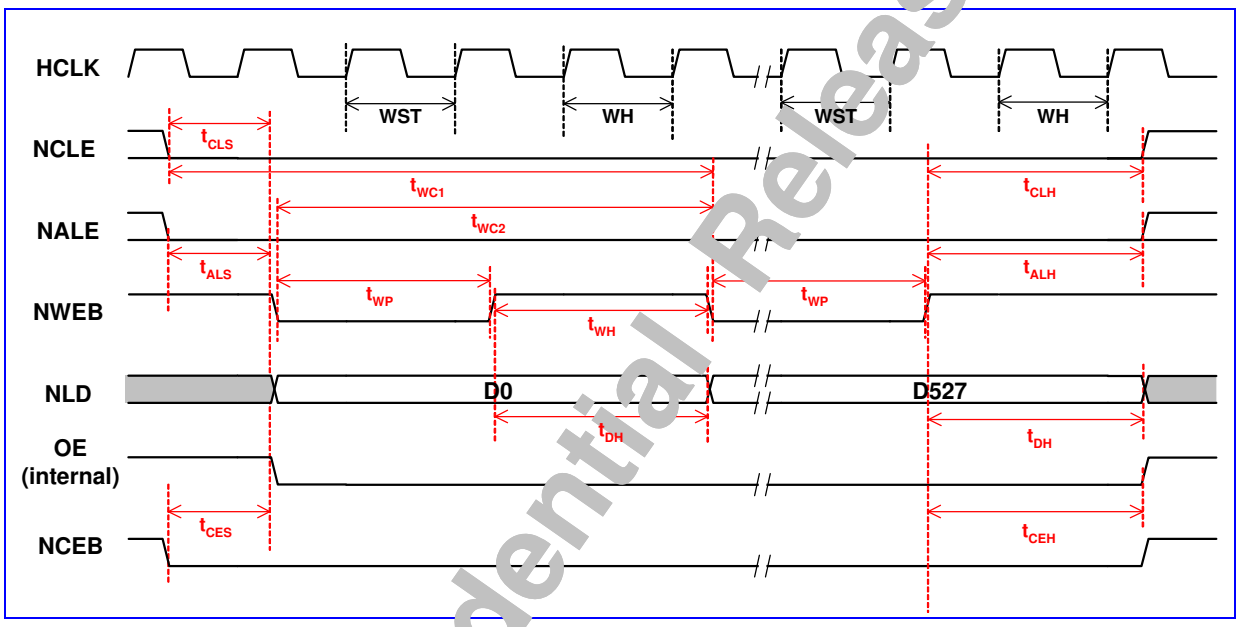

Figure 7 Consecutive data write cycles (1 wait state, 1 hold time extension)

The ideal timing for read access is as listed in **Table 6**.

Parameter	Description	Timing specification	Timing at 13MHz (RLT, WH) = (0,0)	Timing at 26MHz (RLT, WH) = (1,0)	Timing at 52MHz (RLT, WH) = (2,0)
T_{RC1}	*Read cycle time*	3T + RLT + WH	230.8ns	153.8ns	96.2ns
T_{RC2}	*Read cycle time*	2T + RLT + WH	153.9ns	115.4ns	76.9ns
T_{DS}	*Read data setup time*	1T + RLT	76.9ns	76.9ns	57.7ns
T_{DH}	*Read data hold time*	1T + WH	76.9ns	38.5ns	19.2ns
T_{RP}	*Read enable time*	1T + RLT	76.9ns	76.9ns	57.7ns
T_{RH}	*Read high time*	1T + WH	76.9ns	38.5ns	19.2ns
T_{CLS}	*Command latch enable setup time*	1T	76.9ns	38.5ns	19.2ns

MTK Confidential Release for Konka

T_{CLH}	*Command latch enable hold time*	1T + WH	76.9ns	38.5ns	19.2ns
T_{ALS}	*Address latch enable setup time*	1T	76.9ns	38.5ns	19.2ns
T_{ALH}	*Address latch enable hold time*	1T + WH	76.9ns	38.5ns	19.2ns
F_{RC}	*Write data rate*	1 / T_{RC2}	6.5Mbytes/s	8.7Mbytes/s	13Mbytes/s

Table 41 Read access timing

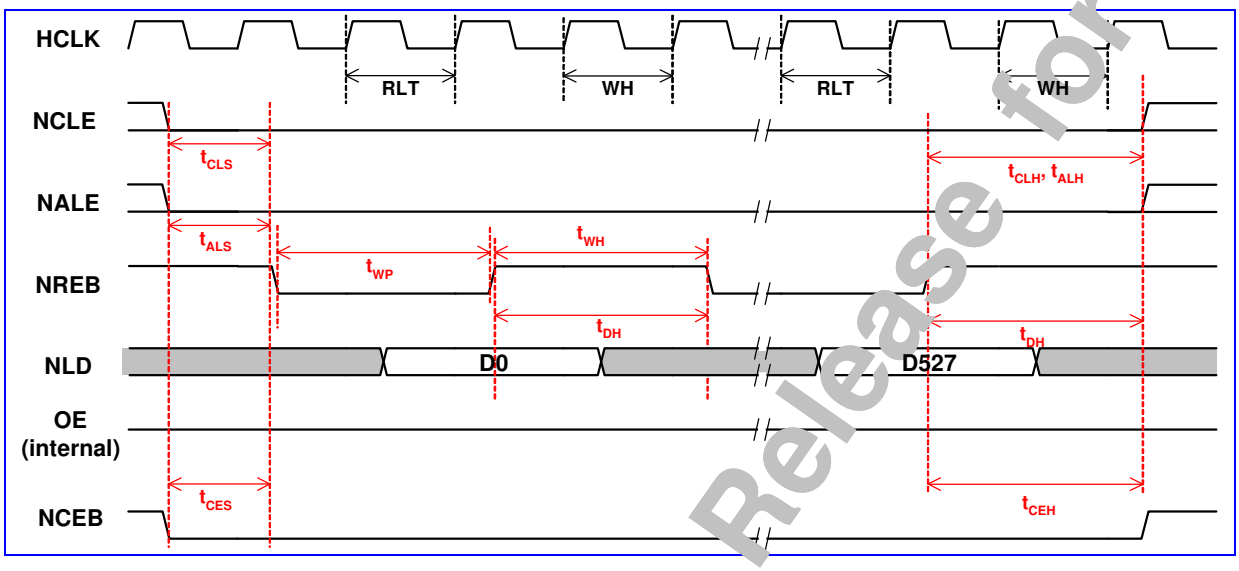

Figure 8 Serial read cycle (1 wait state, 1 hold time extension)

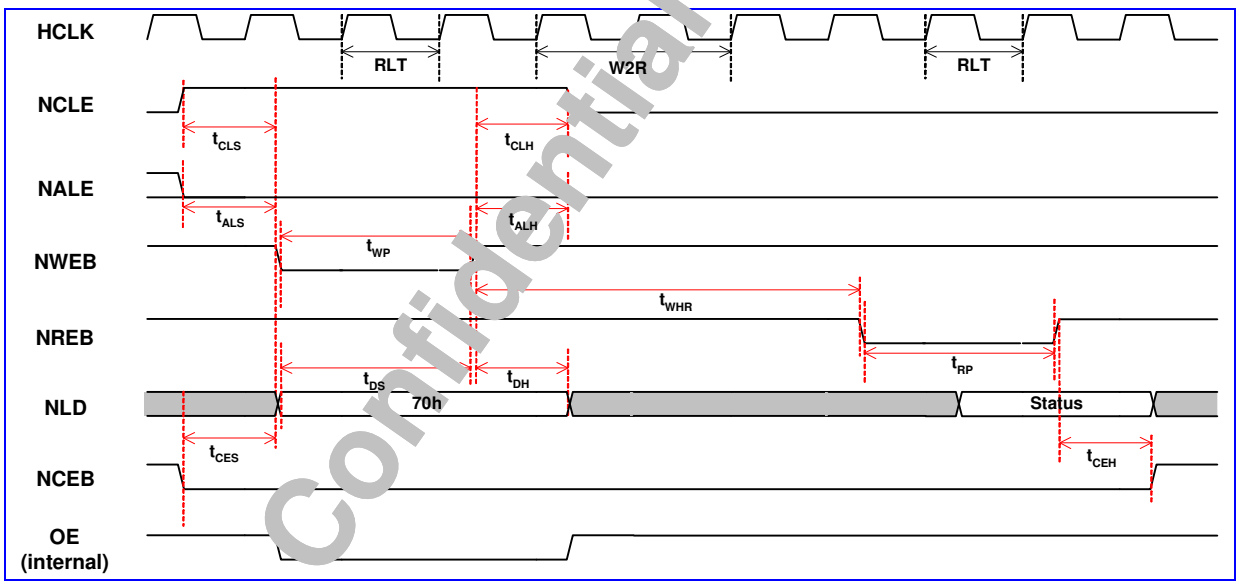

Figure 9 Status read cycle (1 wait state)

MTK Confidential Release for Konka

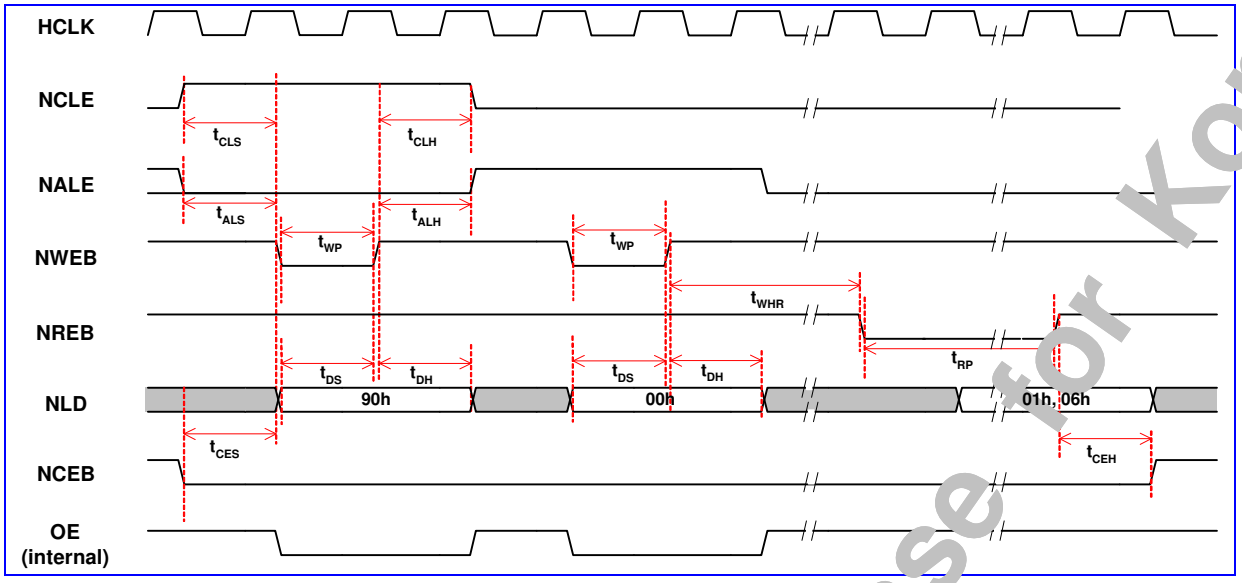

Figure 10 ID and manufacturer read (0 wait state)

6.3 USB OTG Controller

6.3.1 General Description

The USB OTG controller complies with Universal Serial Bus (USB) Specification Rev 1.1 and USB On-The-Go (OTG) Supplement Rev. 1.0a. The USB OTG controller supports USB device mode, USB simple host mode, as well as OTG handshaking capabilities, at full-speed (12 Mbps) operation. The cellular phone uses this widely available USB interface to exchange data with USB hosts such as a PC or laptop; or to function as a host, allowing it to connect to other devices. When operating in host mode, only a single peer-to-peer (no intermediate hub) connection is supported.

The USB device controller provides 5 endpoints in addition to the mandatory control endpoint, three of which are for TX transactions and two for RX transactions. Word, half-word, and byte access methods are allowed for loading and unloading the FIFO buffer. Four independent DMA channels are equipped with the separate controllers to accelerate data transfer. The features of each endpoint are as follows:

1. Endpoint 0 RX: A double buffer is implemented; each buffer is an 8-byte FIFO. DMA transfer is not supported.
2. Endpoint 0 TX: A double buffer is implemented; each buffer is an 8-byte FIFO. DMA transfer is not supported.
3. Endpoint 1 RX: A 64-byte FIFO that accommodates maximum packet size of 64 bytes. DMA transfer is supported.
4. Endpoint 1 TX: A 64-byte FIFO that accommodates maximum packet size of 64 bytes. DMA transfer is supported.
5. Endpoint 2 RX: A 64-byte FIFO that accommodates maximum packet size of 64 bytes. DMA transfer is supported.
6. Endpoint 2 TX: A 64-byte FIFO that accommodates maximum packet size of 64 bytes. DMA transfer is supported.
7. Endpoint 3 TX: An 8-byte FIFO that accommodates maximum packet size of 8 bytes. DMA transfer is not supported.

MTK Confidential Release for Konka

This controller is highly software configurable. All endpoints except the control endpoint can be configured to be a bulk, interrupt or isochronous endpoints.

Note: The Internal Bus clock must be running at 26Mhz or higher for the USB OTG controller to operate correctly.

6.3.2 USB MEMBUF Mapping and BDT Format

The controller uses a buffer descriptor table (BDT) mechanism for control information as well as address pointer into the data buffer that contains the data for each endpoint. A single dedicated software-addressable local memory (USB_MEMBUF) is allocated inside the USB controller to contain both the BDT and the data. Detailed descriptions of the BDT and the USB_MEMBUF mapping follow.

6.3.2.1 USB MEMBUF Memory Map

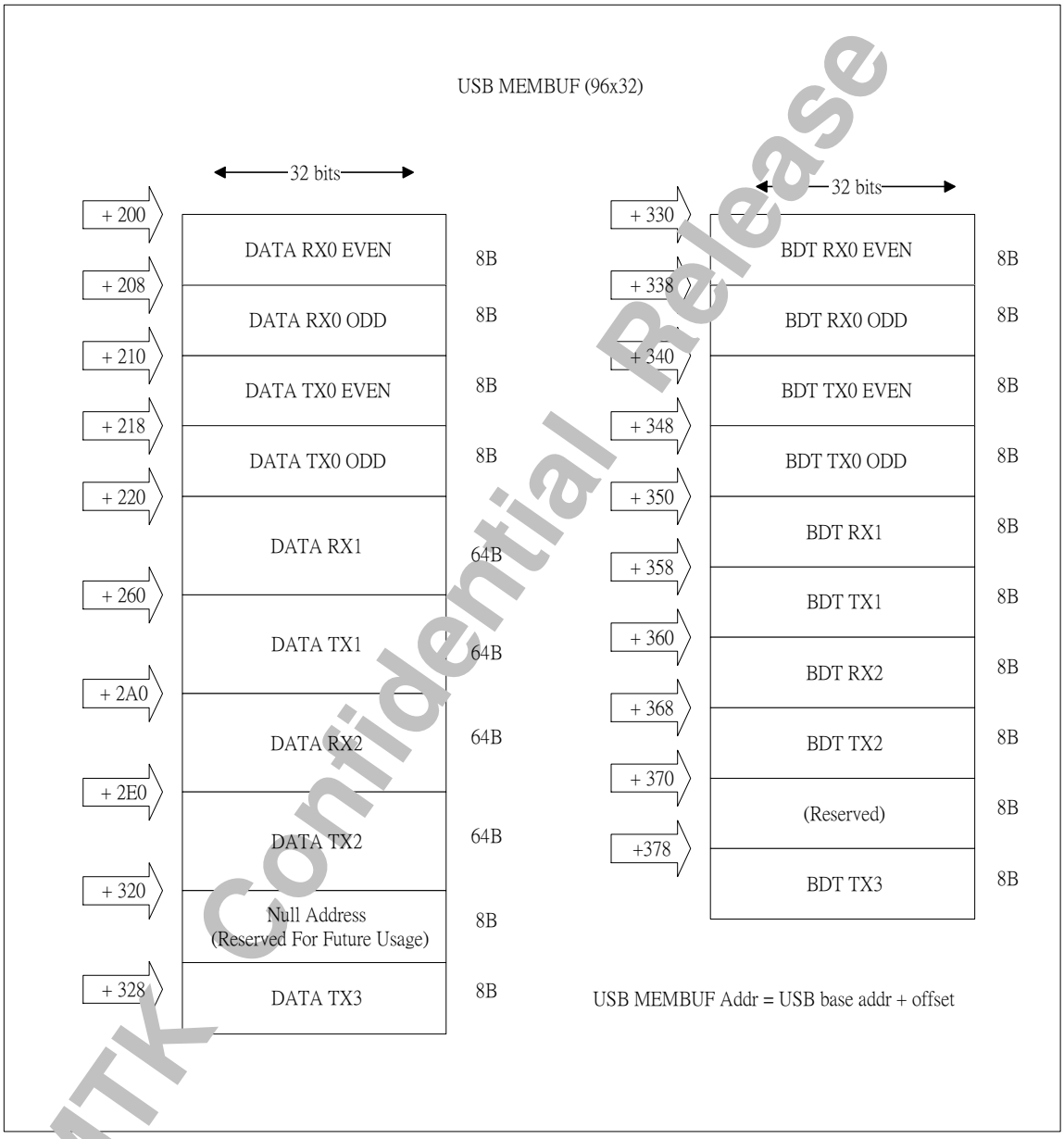

Figure 11 USB Memory Buffer (96x32)

MTK Confidential Release for Konka

6.3.2.2 Buffer Descriptor Byte Format

Each Buffer Descriptor contains 8 bytes of data. The first word contains control information, and the second word contains the address of the associated data buffer.

Bit	31:26	25:16	15:8	7	6	5	4	3	2	1	0
Name	RSVD	BC	RSVD	OWN	DATA0/1	KEEP/TOK_PID[3]	NINC/TOK_PID[2]	DTS/TOK_PID[1]	BDT_STALL/TOK_PID[0]	0	0
Name	Buffer Address (32 bits)										

(Note: VUSB refers to the USB controller hardware)

BUFFER ADDRESS The Address bits represent the 32 -bit buffer address in USB MEMBUF. These bits are unchanged by the VUSB hardware.

BC[9:0] The Byte Count bits represent a 10-bit Byte Count. The VUSB Serial Interface Engine (SIE) changes this field upon completion of a RX transfer with the byte count of the data received.

OWN The OWN bit determines who currently owns the buffer. If OWN=1, VUSB has exclusive access to the BD. If OWN=0 the microprocessor has exclusive access to the BD. The SIE generally writes a 0 to this bit when it has completed a token, except when KEEP=1. When OWN=0, the VUSB ignores all other fields in the BD, and the microprocessor has access to the entire BD. This byte of the BD must be the last byte updated by the microprocessor when initializing a BD. Once the BD has been assigned to the VUSB, the microprocessor must not change it in any way.

DATA0/1 The DATA0/1 bit indicates if a DATA0 field (DATA0/1=0) or a DATA1 (DATA0/1=1) field was transmitted or received. This bit is unchanged by the VUSB.

KEEP/TOK_PID[3] If KEEP=1, once the OWN bit is set, the BD is owned by the VUSB. Typically this bit is set to 1 for ISO endpoints that are feeding a FIFO. The microprocessor is not informed that a token has been processed, the data is simply transferred to or from the FIFO. The NINC bit is normally also set when KEEP=1 to prevent address increment. KEEP must equal 0 to allow the VUSB to release the BD when a token has been processed.

If KEEP=1, this bit is unchanged by the VUSB; otherwise bit 3 of the current token PID is written back into the BD by the VUSB.

NINC/TOK_PID[2] The No INCrement bit disables the DMA engine address increment, forcing the DMA engine to read from or to write to the same address. This feature is useful when data needs to be read from or written to a single location such as a FIFO. Typically this bit is set with the KEEP bit for ISO endpoints that interface with a FIFO.

If KEEP=1, this bit is unchanged by the VUSB; otherwise bit 2 of the current token PID is written back into the BD by the VUSB.

DTS/TOK_PID[1] Setting this bit enables Data Toggle Synchronization by the VUSB. When this bit is 0, no Data Toggle Synchronization is performed.

If KEEP=1, this bit is unchanged by the VUSB; otherwise bit 1 of the current token PID is written back into the BD by the VUSB.

BDT_STALL/TOK_PID[0] Setting this bit causes the VUSB to issue a STALL handshake if a token is received by the SIE that would use the BDT in this location. The BDT is not changed by the SIE (the own bit and the rest of the BDT remain unchanged) when the BDT-STALL bit is set.

If KEEP=1, this bit is unchanged by the VUSB; otherwise bit 0 of the current token PID is written back into the BD by the VUSB.

TOK_PID The current token PID is written back into the BD by the VUSB when a transfer is complete. The token PID takes on values from the USB specification: 0x1 for an OUT token, 0x9 for an IN token or 0xd for a SETUP token. In host mode, this field is used to report the last returned PID or to indicate the transfer

MTK Confidential Release for Konka

status. The possible values returned are: 0x3 DATA0, 0xb DATA1, 0x2 ACK, 0xe STALL, 0xa NAK, 0x0 Bus Timeout, 0xf Data Error.

6.3.3 Operating Modes

The USB_OTG controller supports 3 modes of operation.

6.3.3.1 Standard Mode

In this mode, MEMBUF data is accessed via a single software read/write operation. Both 8-bit and 32-bit access methods are supported. Standard mode is the most flexible operating mode with the maximum software control flexibility. All BDT values are required to be managed by software. However, the throughput for standard mode is slowest of the three modes due to heavy software intervention.

6.3.3.2 Direct Memory Access (DMA) Mode

In DMA mode, MEMBUF data for endpoints 1 and 2 (TX and RX) is accessed via DMA. This access method allows for faster data movement. To issue a DMA transfer, software must enable and disable the individual USB DMA control via its corresponding register set. Aside from the faster data movement, everything is the same as in standard mode.

6.3.3.3 Fast Mode

To increase the operating throughput, the USB OTG controller provides a "fast mode" operation. This mode is most suitable for transmission of large, regular chunks of data. While operating in this mode, DMA is enabled automatically for endpoints 1 and 2 (TX and RX), and each packet transfer is 64 bytes. In order to minimize software involvement and latency, all interrupts to the MCU (except for fast mode error status) are masked during the transmission until the last packet is transferred. Fast mode supports only one endpoint and one direction.

Note: When using fast mode, the own bit of the BDT must be 0 to avoid a software configuration race problem. Hardware manages the own bit value and also BDT values automatically.

6.3.4 Special Conditions

Due to the complex nature of the USB OTG controller design and software operation, some special cases must be noted:

1. When using DMA mode, if B2W of the generic DMA is enabled with 4-beat burst and byte access, then the transfer count of the generic DMA controller must be set to a 4-byte multiple. Otherwise, once the controller arranges the data into words, the few remaining bytes are incorrectly read or written one byte at a time, and each byte is padded to a 4-byte word. The internal USB DMA controller treats each read/write as one word and increments the address after each read/write, thereby incrementing the access pointer incorrectly.

   From a software perspective, all transfer byte counts that are not 4-byte aligned must be padded to a 4-byte multiple; That amount of space must be allocated for receiving: the extra bytes of memory need to be reserved so the received data does not overwrite any useful data.

   For example: If generic DMA is to move 13 bytes of data from USB MEM to SRAM, software must allocate 16 bytes in SRAM for such an operation. The last 3 bytes are unknown data and are to be discarded by software.

2. During a host mode operation, the CRC16 bit of the USB_ERR_STAT register cannot be checked. Instead, use the TOK_PID bits of the BDT to check for a data CRC error.

MTK Confidential Release for Konka

3. When operating in fast mode, software must ignore the token_dne status bit of the USB_INT_STAT register.
4. Interrupts can come from the following sources:
   a. sources listed in the USB_INT_STAT register,
   b. sources listed in the USB_OTG_INT_STAT register,
   c. sources listed in the USB_FM_ERR_STAT register, or,
   d. PHY resume interrupt.

6.3.5 Register Definitions

(Note: VUSB and SIE refer to the USB controller hardware internal modules)

70000000h USB Peripheral ID register USB_PER_ID

Bit	7	6	5	4	3	2	1	0
Name			ID [5:0]					
Type			RO					
Reset	0	0	0x04					

DEBUG PURPOSES ONLY

ID Configuration number. This number is set to 0x04 for hardware core version control.

70000004h USB Peripheral ID complement register USB_ID_COMP

Bit	7	6	5	4	3	2	1	0
Name			NID [5:0]					
Type			RO					
Reset	1	1						

DEBUG PURPOSES ONLY

NID One's complement of ID. This register reads back 0xFB.

70000008h USB revision register USB_REV

Bit	7	6	5	4	3	2	1	0
Name	REV [7:0]							
Type	RO							
Reset								

DEBUG PURPOSES ONLY

REV Revision ID of the hardware controller core. This register reads back 0x32.

7000000Ch USB Peripheral additional info register USB_ADD_INFO

Bit	7	6	5	4	3	2	1	0
Name								
Type								
Reset								

DEBUG PURPOSES ONLY

This register is used for debug purposes only. The register reads back 0x01.

70000010h USB OTG Interrupt status register USB_ISTAT

Bit	7	6	5	4	3	2	1	0
Name	ID_CHG	1_MSEC	LINE_STATE_CHG		SESS_VLD_CHG	B_SESS_CHG		A_VBUS_CHG
Type	R/W	R/W	R/W			R/W		R/W

MTK Confidential Release for Konka

Reset	0	0	0			0		0

The OTG Interrupt Status Register records changes of the ID and VBUS signals. Software reads this register to determine which event is causing an interrupt. Only bits that have changed since the last software read are set. Writing a one to a bit clears the respective interrupt. The change conditions are de-bounced in hardware.

ID_CHG This bit is set when a change in the ID Signal from the USB connector is sensed.

1_MSEC This bit is set when the 1 millisecond timer expires. This bit stays asserted until cleared by software. The interrupt must be serviced every millisecond to avoid losing 1 ms counts.

LINE_STATE_CHG This interrupt is set when the USB line state (CTL_RG SE0 and JSTATE bits) has been stable (unchanged) for 1 millisecond, and if the line state value is different from the last time that the line state was stable. The interrupt is set on transitions between SE0 and J, SE0 and K, and J and K. Changes in JSTATE while SE0 is true do not cause an interrupt. This interrupt can be used in detecting Reset, Resume, Connect and Data Line Pulse signaling.

SESS_VLD_CHG This bit is set when a change in VBUS is detected, indicating a session has become valid or a session is no longer valid.

B_SESS_END_CHG This bit is set when a change in VBUS is detected on a "B" device.

A_VBUS_CHG This bit is set when a change in VBUS is detected on an "A" device.

70000014h USB OTG Interrupt Control register USB_OTG_ICTRL

Bit	7	6	5	4	3	2	1	0
Name	ID_EN	1_MSEC_EN	LINE STATE_EN		SESS_VLD_EN	B_SESS_EN		A_VBUS_EN
Type	R/W	R/W	R/W			R/W		R/W
Reset	0	0	0			0		0

ID_EN Enables the ID interrupt.

1_MSEC_EN Enables the 1 millisecond timer interrupt.

LINESTATE_EN Enables the interrupt on a line state change.

SESS_VLD_EN Enables the session valid interrupt.

B_SESS_EN Enables the "B" Session End Interrupt.

A_VBUS_EN Enables the "A" VBUS Valid Interrupt.

70000018h USB OTG status register JSB_OTG_STAT

Bit	7	6	5	4	3	2	1	0
Name	ID	1_MSEC	LINE_STATE_STABLE		SESS_VLD	B_SESS_END		A_VBUS_VLD
Type	R/W	R/W	R/W			R/W		R/W
Reset	0	0	0			0		0

ID Indicates the current state of the ID pin on the USB connector:

0: A Type A cable has been plugged into the USB connector;

1: no cable is attached or a Type B cable has been plugged into the USB connector.

1_MSEC DEBUG only. This bit is reserved for the 1Msec count. The bit is not useful to software.

LINE_STATE_STABLE This bit is set when the line state (JSTATE and SE0 in the CTL_RG) has been stable for the previous 1 millisecond. This bit is used to provide a hardware debounce of the line state for detection of connect, disconnect and resume signaling. First read the state of JSTATE and SE0 in the CTL_RG, then read this bit. If this bit is 1, then the value of the JSTATE and SE0 bits of the CTL_RG have been static for the previous 1ms and can be considered debounced.

SESS_VLD This bit is set when the VBUS voltage is above the "B" session Valid threshold.

B_SESS_END This bit is set when the VBUS voltage is below the "B" session End threshold.

MTK Confidential Release for Konka

A_VBUS_VLD This bit is set when the VBUS voltage is above the "A" VBUS Valid threshold.

7000001Ch USB OTG Control register JSB_OTG_CTRL

Bit	7	6	5	4	3	2	1	0
Name	DP_HIGH	DM_HIGH	DP_LOW	DM_LOW	VBUS_ON	OTG_EN	VBUS_CHG	VBUS_DSCHG
Type	R/W	R/W	R/W	R/W	R/W	R/W	R/W	R/W
Reset	0	0	0	0	0	0	0	0

The OTG Control Register controls the operation of VBUS and data line termination resistors.

DP_HIGH When set, a pull-up resistor on the D+ Data line is enabled.
DM_HIGH When set, a pull-up resistor on the D- Data line is enabled.
DP_LOW When set, a pull-down resistor on the D+ Data line is enabled.
DM_LOW When set, a pull-down resistor on the D- Data line is enabled.
VBUS_ON When set, the VBUS power signal is turned on.
OTG_EN When set, the pull-up and pull-down controls in this register are used. When OTG_EN is cleared:

- If the CTL register HOST_MODE bit is set, the D+ and D- pull-down resistors are engaged; or,
- If the CTL register HOST_MODE bit is clear and the USB_EN bit is set, the D+ pull-up is engaged.

VBUS_CHG When set, the VBUS signal is charged through a resistor.
VBUS_DSCHG When set, the VBUS signal is discharged through a resistor.

70000020h USB FM packet count number (low byte) USB_FM_PKT_NUM_L

Bit	7	6	5	4	3	2	1	0
Name	PKT_NUM[7:0]							
Type	R/W							
Reset	0							

70000024h USB FM packet count number (low byte) USB_FM_PKT_NUM_H

Bit	7	6	5	4	3	2	1	0
Name	PKT_NUM[15:8]							
Type	R/W							
Reset	0							

FAST MODE ONLY

PKT_NUM These 2 registers combined specify the number of 64-byte packets to be transferred.

70000028h USB FM error status register USB_FM_ERR_STAT

Bit	7	6	5	4	3	2	1	0
Name	STA_OVR_FLW	FM_TOK_DONE	DMA TX	DMA RX		SUC_ERR	NAK_ERR	SHRT_ERR
Type	R/W	R/W	R/W	R/W		R/W	R/W	R/W
Reset	0	0	0	0		0	0	0

FAST MODE ONLY All status bits that are set are cleared by rewriting a 1.
STA_OVR_FLW Indicates that during fast mode, the non-fast mode status FIFO (+0x50) has overflowed.
FM_TOK_DONE This is the non-fast mode endpoint token done interrupt. During fast mode operation, any non-fast mode endpoint token done signal is moved to this register bit for indication.

MTK Confidential Release for Konka

DMA_TX_EN **DEBUG only.** Asserted if fm dma_rx_en is asserted and USB_FM_INT_MASK (+0x6C) mask is enabled.

DMA_RX_EN **DEBUG only.** Asserted if fm dma_rx_en is asserted and USB_FM_INT_MASK (+0x6C) mask is enabled.

SUC_ERR **HOST mode only.** 3 successive errors. This bit is set when the error count is 3 and USB_FM_CTRL (+0x2C) is 1, or when the error count is 1 and USB_FM_CTRL (+0x2C) is 0.

NAK_ERR **HOST mode only.** This bit is set when the NAK count exceeds the IN-NAK Timeout Setting register.

SHRT_ERR **HOST mode only.** Short packet error. This bit is set when the data transferred in a single transaction is less than 64 bytes.

70000028h USB FM control register USB_FM_CTRL

Bit	7	6	5	4	3	2	1	0
Name		TOG_BIT			SUC_ERR_EN	EPT0_TX_ODD	EPT0_RX_ODD	FASTMODE_EN
Type		R/W			R/W	R	R	R/w
Reset		0			1	0	0	0

FAST MODE ONLY

TOG_BIT Data toggle bit. This bit indicates whether the type of data transmitted or received by hardware was DATA0 or DATA1.

0: DATA0

1: DATA1

EP0_TX_ODD Endpoint 0 TX ODD. This bit is set when using the TX ODD BDT.

EP0_RX_ODD Endpoint 0 RX ODD. This bit is set when using the RX ODD BDT.

FASTMODE_EN Enable Fast Mode operation. This bit is reset by hardware after the transfer is complete.

70000030h USB FM transfer counter register (low byte) USB_FM_PKT_CNT_L

Bit	7	6	5	4	3	2	1	0
Name	PKT_CNT[7:0]							
Type	RO							
Reset	0							

70000034h USB FM transfer counter register (high byte) USB_FM_PKT_CNT_H

Bit	7	6	5	4	3	2	1	0
Name	PKT_CNT[15:8]							
Type	RO							
Reset	0							

FAST MODE ONLY

PKT_CNT These 2 registers combined specify the number of 64-byte packets transferred.

70000038h USB FM timeout setting register (high byte) USB_FM_TIMEOUT

Bit	7	6	5	4	3	2	1	0
Name	NAK_TIMEOUT[7:0]							
Type	R/W							
Reset	1							

FAST MODE ONLY

NAK_TIMEOUT **HOST mode only.** Transfer timeout setting = 64ms * NAK_TIMEOUT

MTK Confidential Release for Konka

7000003Ch USB FM status register

USB_FM_STATUS

Bit	7	6	5	4	3	2	1	0
Name					EPT2_TX_ODD	EPT2_RX_ODD	EPT1_TX_ODD	EPT1_RX_ODD
Type					R	R	R	R
Reset					0	0	0	0

FAST MODE ONLY

EP2_TX_ODD Endpoint 2 TX ODD.

EP2_RX_ODD Endpoint 2 RX ODD.

EP1_TX_ODD Endpoint 1 TX ODD.

EP1_RX_ODD Endpoint 1 RX ODD.

70000050h USB FM additional status register

USB_FM_ADD_STAT

Bit	7	6	5	4	3	2	1	0
Name	ENDPT[3:0]				TX	ODD		
Type	RO				RO	RO		
Reset	0				0	0		

FAST MODE ONLY

The additional status register stores the status of non-fast mode packet during fast mode operation, to allow the intermixing of fast mode and non-fast mode packets.

When entering fast mode, any existing status in USB_STAT register that has not yet been cleared is automatically transferred to this register. The format of this status register is the same as the USB_STAT register, and a 4-byte FIFO is also used in this case. When the FM_TOK_DONE bit in USB_FM_ERR_STAT is cleared, the FM_ADD_STAT register is updated with the contents of the next value in the FIFO. FM_TOK_DONE is asserted until the FIFO is empty.

ENDPT[3:0] These four bits represents the endpoint address that received or transmitted the previous token, so that the microprocessor can determine which BDT entry was updated by the last USB transaction.

TX This bit indicates whether the last BDT updated was for a transmit data transfer (TX=1) or for a receive data transfer (TX=0).

ODD This bit indicates that the last buffer descriptor updated was in the odd bank of the BDT. See the earlier section for more information on BDT address generation.

70000068h USB FM endpoint register

USB_FM_ENDPT

Bit	7	6	5	4	3	2	1	0
Name	TX_RES	DMA_DONE	OWN	TX	ENDPT[3:0]			
Type	R/W	R/W	R/W	R/W	R/W			
Reset	0	1	0	0	0			

FAST MODE ONLY

TX_RES **DEVICE mode only.** Tx residue. This setting is used when the transmit byte count is not a multiple of 64 bytes. By default, fast mode operates on 64B packet boundaries, and the fast mode-done indication is asserted once the last 64-byte packet is sent: no further USB DMA sequence takes place. If this bit is set, the fast mode controller issues an additional dma_tx_en request to the USB DMA controller after the last 64B-aligned packet is sent, even with fast mode-done indication still asserted, allowing the USB DMA engine to fetch the next non-64B-aligned data. Software needs to take this situation into consideration.

MTK Confidential Release for Konka

DMA_DONE **DEBUG only.** Test only.

OWN **DEBUG only.** Own bit of fast mode. This bit is used when a token is received during fast mode but the BDT is not yet valid, or the BDT is valid but fast mode has not yet been enabled. The bit clears itself once fast mode completes.

TX **DEVICE mode only.** The endpoint direction of fast mode. TX=1 indicates a transmit (IN) direction; TX=0 indicates a receive (OUT) direction.

7000006Ch USB FM interrupt mask register USB_FM_INT_MASK

Bit	7	6	5	4	3	2	1	0
Name					DMA_TX_EN_MASK	DMA_RX_EN_MASK		
Type					R/W	R/W		
Reset					0	0		

FAST MODE ONLY

DMA_TX_MASK **DEBUG only.** When set, the dma_tx_en interrupt is enabled.

DMA_RX_MASK **DEBUG only.** When set, the dma_rx_en interrupt is enabled.

70000070h USB extra register USB_EXTRA

Bit	7	6	5	4	3	2	1	0
Name	PHY_RESUME_INT					PHY_RESUME_INT_EN	PHY_SUSPND	TOGGLE_TEST
Type	RO					R/W	R/W	R/W
Reset	0					0	0	0

PHY_RESUME_INT Interrupt indicating PHY Resume. This bit can only be asserted when PHY_SUSPND =1. This bit clears itself when PHY_SUSPND=0.

PHY_RESUME_INT_EN When set, the PHY Resume interrupt is enabled.

PHY_SUSPND When set, the PHY is suspended.

TOGGLE_TEST **DEBUG only.** Toggles USB DP/DM output automatically.

70000080h USB Interrupt status register USB_INT_STAT

Bit	7	6	5	4	3	2	1	0
Name	STALL	ATTACH	RESUME	SLEEP	TOK_DNE	SOF_TOK	ERROR	USB_RST
Type	R/W	R/W	R/W	R/W	R/W	R/W	R/W	R/W
Reset	0	0	0	0	0	0	0	0

All status bits that are set are cleared by rewriting a 1.

STALL The stall interrupt is used in target and host modes. In target mode the stall bit is asserted when a STALL handshake is sent by the SIE.
In host mode this bit is set if the VUSB has detected a STALL acknowledgement during the handshake phase of a USB transaction. This interrupt is useful for determining if the last USB transaction was completed successfully or stalled.

ATTACH This bit is set if the VUSB has detected the attachment of a USB peripheral. This signal is only valid if HOST_MODE_EN is true. This interrupt signifies that a peripheral is now present and must be configured. The ATTACH interrupt is asserted if there have been no transitions on the USB for 2.5us and the current bus state is not SE0.

RESUME This bit is set when a K-state is observed on the DP/DM signals for 2.5usec. The bit can indicate a remote wake up signal on the USB bus. When not in suspend mode, disable this interrupt.
(Note: this bit is only useful if the PHY has not been powered down into suspend mode. Otherwise, use USB_EXTRA register status bits to resume monitoring.)

MTK Confidential Release for Konka

SLEEP This bit is set if the VUSB has detected a constant idle on the USB bus signals for 3 ms. The sleep timer is reset by activity on the USB bus.

TOK_DNE This bit is set when the current token being processing is complete. The microprocessor must immediately read the STAT register to determine the End Point and BD used for this token. Clearing this bit (by writing a one) causes the STAT register to be cleared or the STAT holding register to be loaded into the STAT register. **(Note: When Fast Mode is enabled, DO NOT look at this bit.)**

SOF_TOK This bit is set if the VUSB has received a Start Of Frame (SOF) token. In host mode, this bit is set when the SOF threshold is reached, so that software can prepare for the next SOF.

ERROR This bit is set when any of the error conditions in the ERR_STAT register has occurred. The microprocessor must then read the ERR_STAT register to determine the source of the error.

USB_RST This bit is set when the VUSB has decoded a valid USB reset. An asserted USB_RST bit informs the microprocessor to write 0x00 into the address register and enable endpoint 0. USB_RST is set once a USB reset has been detected for 2.5 microseconds, and is not asserted again until the USB reset condition has been removed, and then reasserted.

70000084h USB Interrupt Enable register USB_INT_ENB

Bit	7	6	5	4	3	2	1	0
Name	STALL	ATTACH	RESUME	SLEEP	TOK_DNE	SOF_TOK	ERROR	USB_RST
Type	R/W	R/W	R/W	R/W	R/W	R/W	R/W	R/W
Reset	0	0	0	0	0	0	0	0

STALL Setting this bit enables the STALL interrupt.

ATTACH Setting this bit enables the ATTACH interrupt.

RESUME Setting this bit enables the RESUME interrupt.

SLEEP Setting this bit enables the SLEEP interrupt.

TOK_DNE Setting this bit enables the TOK_DNE interrupt.

SOF_TOK Setting this bit enables the SOF_TOK interrupt.

ERROR Setting this bit enables the ERROR interrupt.

USB_RST Setting this bit enables the USB_RST interrupt.

70000088h USB Error Interrupt Status register USB_ERR_STAT

Bit	7	6	5	4	3	2	1	0
Name	BTS_ERR		DMA_ERR	BTO_ERR	DFN8	CRC16	CRC5/EOF	PID_ERR
Type	R/W		R/W	R/W	R/W	R/W	R/W	R/W
Reset	0		0	0	0	0	0	0

The Error Interrupt Status Register contains bits for each of the error sources within the VUSB. Each of these bits are qualified with their respective error enable bits (See Error Enable Register page). The error bits are OR'ed together and the result is sent to the ERROR bit of the INT_STAT register. Once an interrupt bit has been set, it can only be cleared by writing a one to the respective interrupt bit. Each bit is set as soon as the error condition is detected. Thus, the interrupt does not typically correspond with the end of a token being processed.

(Note: All status bits that are set are cleared by writing a 1.)

BTS_ERR A bit stuff error has been detected. If set, the corresponding packet is rejected due to a bit stuff error.

DMA_ERR This bit is set if the VUSB has requested a DMA access to read a new BDT but the bus is not available before VUSB needs to receive or transmit data. If processing a TX transfer, a transmit data underflow condition occurs. If processing an RX transfer, a receive data overflow condition occurs. This interrupt is useful when developing device arbitration hardware for the microprocessor and VUSB to minimize bus request and bus grant latency. This bit is also set if a data packet to or from the host is

MTK Confidential Release for Konka

larger than the allocated buffer size in the BDT. In this case the data packet is truncated as it is placed into the buffer memory.

BTO_ERR This bit is set if a bus turnaround timeout error has occurred. This VUSB uses a bus turnaround timer to keep track of the amount of time elapsed between the token and data phases of a SETUP or OUT TOKEN, or between the data and handshake phases of a IN TOKEN. If more than 16 bit times are counted from the previous EOP before a transition from IDLE, a bus turnaround timeout error occurs.

DFN8 The data field received is not a multiple of 8 bits. The USB Specification 1.0 specifies that the data field must be an integral number of bytes. If the data field is not an integral number of bytes, this bit is set.

CRC16 The CRC16 failed. If set, the data packet was rejected due to a CRC16 error.
(Note: When in HOST MODE, ignore this bit. Look at the BDT TOK_PID entries instead to determine error conditions.)

CRC5/EOF This error interrupt has two functions. When the VUSB is operating in peripheral mode (HOST_MODE_EN=0) this interrupt detects a CRC5 error in token packets generated by the host. If set, the token packet was rejected due to a CRC5 error. When the VUSB is operating in host mode (HOST_MODE_EN=1), this interrupt detects End of Frame (EOF) error conditions. This condition occurs when the VUSB is transmitting or receiving data and the SOF counter has reached zero. This interrupt is useful when developing USB packet scheduling software to ensure that no USB transactions cross into the start of the next frame.

PID_ERR The PID check field failed.

7000008Ch USB Error Interrupt Enable register USB_ERR_ENB

Bit	7	6	5	4	3	2	1	0
Name	BTS_ERR		DMA_ERR	BTO_ERR	DFN8	CRC16	CRC5/EOF	PID_ERR
Type	R/W		R/W	R/W	R/W	R/W	R/W	R/W
Reset	0		0	0	0	0	0	0

BTS_ERR Setting this bit enables the BTS_ERR interrupt.
DMA_ERR Setting this bit enables the DMA_ERR interrupt.
BTO_ERR Setting this bit enables the BTO_ERR interrupt.
DFN8 Setting this bit enables the DFN8_ERR interrupt.
CRC16 Setting this bit enables the CRC16 interrupt.
CRC5/EOF Setting this bit enables the CRC5/EOF_ERR interrupt.
PID_ERR Setting this bit enables the PID_ERR interrupt.

70000090h USB Status register USB_ STAT

Bit	7	6	5	4	3	2	1	0
Name	ENDPT[3:0]				TX	ODD		
Type	RO				RO	RO		
Reset	0				0	0		

The Status Register reports the transaction status within the VUSB. When the microprocessor has received a TOK_DNE interrupt, the Status Register should be read to determine the status of the previous endpoint communication. The data in the status register is valid when the TOK_DNE interrupt bit is asserted. The STAT register acts as a read window into a status FIFO maintained by the VUSB. When the VUSB uses a BD, the status register is updated. If another USB transaction is performed before the TOK_DNE interrupt is serviced the VUSB stores the status of the next transaction in the STAT FIFO. Thus, the STAT register is actually a 4-byte FIFO that allows the microprocessor to process one transaction while the SIE is processing the next. Clearing the TOK_DNE bit in the INT_STAT register causes the SIE to update the STAT register with the contents of the next STAT value. If the data in the STAT holding register is valid, the SIE immediately reasserts the TOK_DNE interrupt.

MTK Confidential Release for Konka

ENDPT[3:0] These four bits encode the endpoint address that received or transmitted the previous token, allowing the microprocessor to determine which BDT entry was updated by the last USB transaction.

TX This bit indicates whether the last BDT updated was a transmit transfer (TX=1), or a receive data transfer (TX=0).

ODD This bit indicates that the last buffer descriptor updated was in the odd bank of the BDT. See earlier section for more information on BDT address generation.

70000094h USB Control register USB_CTL

Bit	7	6	5	4	3	2	1	0
Name	JSTATE	SE0	TXDSUSPEND / TOKENBUSY	RESET	HOST_MODE EN	RESUME	ODD_RST	USB_EN / SOF_EN
Type	R/W	R/W	R/W	R/W	R/W	R/W	R/W	R/W
Reset	0	0	0	0	0	0	0	0

JSTATE Live USB differential receiver JSTATE signal. The polarity of this signal is affected by the current state of LS_EN (See the Address Register description below).

SE0 Live USB Single Ended Zero signal.

TXDSUSPEND / TOKENBUSY

This dual use control signal is used to access TXD_SUSPEND when the VUSB is a target, and Token Busy when the VUSB is in host mode.

The TXD Suspend bit informs the processor that the SIE has disabled packet transmission and reception. Clearing this bit allows the SIE to continue token processing. This bit is set by the SIE when a Setup Token is received allowing software to dequeue any pending packet transactions in the BDT before resuming token processing.

The Token Busy bit informs the host processor that the VUSB is busy executing a USB token and that no more token commands should be written to the Token Register. Software must check this bit before writing any tokens to the Token Register to ensure that token command are not lost.

RESET Setting this bit enables the VUSB to generate USB reset signaling, allowing the VUSB to reset USB peripherals. This control signal is only valid in host mode, (i.e. HOST_MDOE_EN=1). Software must set RESET=1 for the required amount of time and then clear it to 0 to end reset signaling. For more information on RESET signaling see Section 7.1.4.3 of the USB specification version 1.0.

HOST_MODE_EN Setting this bit enables the VUSB to operate in host mode. In host mode the VUSB performs USB transactions under the programmed control of the host processor.

RESUME Setting this bit allows the VUSB to execute resume signaling, allowing the VUSB to perform remote wake-up. Software must set RESUME=1 for the required amount of time and then clear it to 0. If the HOST_MODE_EN bit is set, the VUSB appends a Low Speed End of Packet to the Resume signal when the RESUME bit is cleared. For more information on RESUME signaling see Section 7.1.4.5 of the USB specification version 1.0.

ODD_RST Setting this bit resets all the BDT ODD ping/pong bits to 0 which then specify the EVEN BDT bank.

USB_EN / SOF_EN Setting this bit enables the VUSB; clearing the bit disables the VUSB. Setting this bit causes the SIE to reset all of its ODD bits to the BDTs. Thus, setting this bit resets much of the logic in the SIE. When host mode is enabled clearing this bit causes the SIE to stop sending SOF tokens.

70000098h USB Address register USB_ADDR

Bit	7	6	5	4	3	2	1	0
Name	LS_EN	ADDR[6:0]						
Type	R/W	R/W						
Reset	0	0						

MTK Confidential Release for Konka

LS_EN The Low Speed enable bit informs the VUSB that the next token command written to the token register must be performed at low speed. This indication enables the VUSB to perform necessary preparations for low speed data transmissions.

ADDR[6:0] This 7-bit value defines the USB address that the VUSB decodes in peripheral mode, or transmits when in host mode.

7000009Ch USB BDT page 1 register — USB_BDT_PAGE_01

Bit	7	6	5	4	3	2	1	0
Name	BDT_BA [15:8]							
Type	R/W							
Reset	0							

700000B0h USB BDT page 2 register — USB_BDT_PAGE_02

Bit	7	6	5	4	3	2	1	0
Name	BDT_BA [23:16]							
Type	R/W							
Reset	0							

700000B4h USB BDT page 3 register — USB_BDT_PAGE_03

Bit	7	6	5	4	3	2	1	0
Name	BDT_BA [31:24]							
Type	R/W							
Reset	0							

BDT_BA[31:8] These 3 registers combined forms the BDT_PAGE pointer. Set these bytes as follows:

USB_BDT_PAGE_01 = 0x0

USB_BDT_PAGE_02 = 0x0

USB_BDT_PAGE_03 = 0xBD

700000A0h USB Frame number low byte register — USB_FRM_NUML

Bit	7	6	5	4	3	2	1	0
Name	FRM[7:0]							
Type	RO							
Reset	0							

700000A4h USB Frame number high byte register — USB_FRM_NUMH

Bit	7	6	5	4	3	2	1	0
Name						FRM[10:8]		
Type						RO		
Reset						0		

FRM[10:0] These 2 registers combined represent the 11-bit frame number. The registers are updated with the current frame number whenever a SOF TOKEN is received.

700000A8h USB Token register — USB_TOKEN

Bit	7	6	5	4	3	2	1	0

MTK Confidential Release for Konka

Name	TOKEN_PID	TOKEN_ENDPT
Type	R/W	R/W
Reset	0	0

The Token Register is used when performing USB transactions when in host mode (HOST_MODE_EN=1). When the host processor wishes to execute a USB transaction to a peripheral, it writes the TOKEN type and endpoint to this register. Once this register has been updated the VUSB begins the specified USB transaction to the address contained in the Address Register. The host processor must check that the TOKEN_BUSY bit in the control register is not set before performing a write to the Token Register: checking ensures that token commands are not overwritten before they can be executed. The address register and endpoint control register 0 are also used when performing a token command and therefore must also be updated before the Token Register. The address register is used to select the correct USB peripheral address to transmit by the token command. The endpoint control register determines the handshake and retry policies used during the transfer.

TOKEN_PID This 4-bit value is the token type that is executed by the VUSB. Valid tokens are:

TOKEN_PID	TOKEN type	Description
0001	OUT	VUSB performs an OUT (TX) Transaction
1001	IN	VUSB performs an IN (RX) Transaction
1101	SETUP	VUSB performs a SETUP (TX) Transaction

TOKEN_ENDPT This 4-bit value determines the Endpoint address for the token command. The 4-bit value that is written must be a valid endpoint.

700000ACh USB SOF threshold register

USB_SOF_THLD

Bit	7	6	5	4	3	2	1	0
Name	CNT[7:0]							
Type	R/W							
Reset	0							

The Start Of Frame (SOF) Threshold Registers are used only in HOST_MODE. When HOST_MODE is enabled, the 14-bit SOF counter counts the interval between SOF frames. The SOF must be transmitted every millisecond so the SOF counter is loaded with a value of 12000 since it is based on a 12MHz internal counter. When the SOF counter reaches zero, a SOF token is transmitted. The SOF threshold register is used to program the number of USB byte times *before* the SOF to stop initiating token packet transactions. This register must be set to a value that ensures that other packets are not actively being transmitted when the SOF timer count reaches zero. When the SOF counter reaches the threshold value, no more tokens are transmitted until after the SOF has been transmitted. The value programmed into the threshold register must reserve enough time to ensure that the worst case transaction completes. In general the worst case transaction is an IN token followed by a data packet from the target, followed by the response from the host. The actual time required is a function of the maximum packet size on the bus. Typical values for the SOF threshold are:

Package size (bytes)	Time (byte times)
64	74
32	42
16	26
8	18

CNT[7:0] These bits represents the SOF count threshold in BYTE times.

MTK Confidential Release for Konka

700000C0h~ 700000FFh USB Endpoint Control register USB_EP_CTLN

Bit	7	6	5	4	3	2	1	0
Name	HOST_WO_HUB	RETRY_DIS		EP_CTL_DIS	EP_RX_EN	EP_TX_EN	EP_STALL	EP_HSHK
Type	R/W	R/W		R/W	R/W	R/W	R/W	R/W
Reset	0	0		0	0	0	0	0

The Endpoint Control Registers contains the endpoint control bits for each of the 16 endpoints available on USB for a decoded address. These four bits define all of the control necessary for any one endpoint. The formats for these registers are shown in the table on the following page. Endpoint 0 (ENDP0) is associated with control pipe 0 which is required by USB for all functions. Therefore, after a USB_RST interrupt has been received the microprocessor must set ENDPT0 to contain 0x0D. In host mode ENDPT0 is used to determine the handshake, retry and low-speed characteristics of the host transfer. For host mode control, bulk and interrupt transfers, the EP_HSHK bit must be set to 1; for Isochronous transfers the EP_HSHK must be set to 0. Common values for ENDPT0 in host mode are 0x4D for Control, Bulk and Interrupt transfers, and 0x4C for Isochronous transfers.

HOST_WO_HUB **HOST mode only.** This bit is only present in the control register for endpoint 0 (endpt0_rg). When this bit is set, the host can communicate with a directly connected low-speed device. When cleared, the host produces a PRE_PID then switches to low-speed signaling when sending a token to a low-speed device, as required for communication with a low-speed device via a hub.

RETRY_DIS **HOST mode only.** This bit is only present in the control register for endpoint 0 (endpt0_rg). When this bit is set, the host does not reattempt NAK'ed transactions. When a transaction is NAK'ed, the BDT PID field is updated with the NAK pid, and the token done interrupt is set. When this bit is cleared, NAK'ed transactions are retried in hardware. This bit must be set when the host is attempting to poll an interrupt endpoint.

EP_CTL_DIS, EP_RX_EN, EP_TX_EN

These 3 bits define if an endpoint is enabled and the direction of the endpoint. The endpoint enable/direction control is defined as follows:

ep_ctl_dis	ep_rx_en	ep_tx_en	endpoint en / direction control
X	0	0	Disable Endpoint
X	0	1	Enable Endpoint for TX transfers only
X	1	0	Enable Endpoint for RX transfers only
1	1	1	Enable Endpoint for both RX and TX transfers
0	1	1	Enable Endpoint for RX and TX and control transfers

EP_STALL When set to 1, this bit indicates that the endpoint is stalled. This bit has priority over all other control bits in the End Point Enable register, but is only valid if EP_TX_EN=1 or EP_RX_EN=1. Any access to this endpoint causes the VUSB to return a STALL handshake. Once an endpoint is stalled, intervention from the Host Controller is required.

EP_HSHK Setting this bit determines if an endpoint performs handshaking during a transaction to this endpoint. This bit is generally set to 1 unless the endpoint is an Isochronous endpoint.

700000410h USB DMA enable USB_DMA_EN

Bit	7	6	5	4	3	2	1	0
Name					TX2_DMA_EN	RX2_DMA_EN	TX1_DMA_EN	RX1_DMA_EN
Type					W	W	W	W
Reset					0	0	0	0

These are 1 shot signal.

TX2_DMA_EN Setting this bit enablesTX2 DMA.

MTK Confidential Release for Konka

RX2_DMA_EN Setting this bit enables RX2 DMA.
TX1_DMA_EN Setting this bit enables TX1 DMA.
RX1_DMA_EN Setting this bit enables RX1 DMA.

700000414h USB DMA disable USB_DMA_DIS

Bit	7	6	5	4	3	2	1	0
Name					TX2_DMA_DIS	RX2_DMA_DIS	TX1_DMA_DIS	RX1_DMA_DIS
Type					W	W	W	W
Reset					0	0	0	0

These are 1 shot signal.

TX2_DMA_DIS Setting this bit disables TX2 DMA.
RX2_DMA_DIS Setting this bit disables RX2 DMA.
TX1_DMA_DIS Setting this bit disables TX1 DMA.
RX1_DMA_DIS Setting this bit disables RX1 DMA.

700000414h USB DMA address counter clear USB_DMA_ADDR_CNTER_CLR

Bit	7	6	5	4	3	2	1	0
Name					TX2_DMA_CLR	RX2_DMA_CLR	TX1_DMA_CLR	RX1_DMA_CLR
Type					W	W	W	W
Reset					0	0	0	0

These are 1 shot signals.

TX2_DMA_CLR Setting this bit clears the TX2 DMA address pointer.
RX2_DMA_CLR Setting this bit clears the RX2 DMA address pointer.
TX1_DMA_CLR Setting this bit clears the TX1 DMA address pointer.
RX1_DMA_CLR Setting this bit clears the RX1 DMA address pointer.

7000041Ch USB DMA FM select register USB_DMA_FM_SELECT

Bit	7	6	5	4	3	2	1	0
Name							DMA_FM_SEL	
Type							R/W	
Reset							0	

FAST MODE ONLY

DMA_FM_SEL Selects which USB DMA controller the FM controller should use.

00: Use RX1 DMA
01: Use TX1 DMA
10: Use RX2 DMA
11: Use TX1 DMA

70000420h USB Soft Reset USB_SOFT_RESET

Bit	7	6	5	4	3	2	1	0
Name								SOFT_RESET
Type								W
Reset								0

SOFT_RESET Setting this bit to 1 invokes a synchronous soft reset. The asserted bit holds high for 4 clock counts, therefore, software must not issue any read/write within 4T of this reset.

MTK Confidential Release for Konka

70000450h USB PHY Control **USB_PHY_CTRL**

Bit	7	6	5	4	3	2	1	0
Name							PUSW2EB_REG	MANUAL
Type							R	R
Reset							0	0

DEBUG ONLY

The 2 register bits are used to manually control IPUSW2EB signal to PHY. When Manual =1, IPUSW2EB contains the value of IPUSW2EB_REG.

6.4 Memory Stick and SD Memory Card Controller

6.4.1 Introduction

The controller fully supports the Memory Stick bus protocol as defined in Format Specification version 2.0 of Memory Stick Standard (Memory Stick PRO) and the SD Memory Card bus protocol as defined in SD Memory Card Specification Part 1 Physical Layer Specification version 1.0 as well as the MultiMediaCard (MMC) bus protocol as defined in MMC system specification version 2.2. Since SD Memory Card bus protocol is backward compatible to MMC bus protocol, the controller is capable of working well as the host on MMC bus under control of proper firmware. Furthermore, the controller also support SDIO card specification version 1.0 partially. However, the controller can only be configured as either the host of Memory Stick or the host of SD/MMC Memory Card at one time. Hereafter, the controller is also abbreviated as MS/SD controller. The following are the main features of the controller.

- Interface with MCU by APB bus
- 16/32-bit access on APB bus
- 16/32-bit access for control registers
- 32-bit access for FIFO
- Shared pins for Memory Stick and SD/MMC Memory Card
- Built-in 32 bytes FIFO buffers for transmit and receive, FIFO is shared for transmit and receive
- Built-in CRC circuit
- CRC generation can be disabled
- DMA supported
- Interrupt capabilities
- Automatic command execution capability when an interrupt from Memory Stick
- Data rate up to 26 Mbps in serial mode, 26x4 Mbps in parallel model, the module is targeted at 26 MHz operating clock
- Serial clock rate on MS/SD/MMC bus is programmable
- Card detection capabilities
- Controllability of power for memory card
- Not support SPI mode for MS/SD/MMC Memory Card

MTK Confidential Release for Konka

- Not support multiple SD Memory Cards

6.4.2 Overview

6.4.2.1 Pin Assignment

Since the controller can only be configured as either the host of Memory Stick or the host of SD/MMC Memory Card at one time, pins for Memory Stick and SD/MMC Memory Card are shared in order to save pin counts. The following lists pins required for Memory Stick and SD/MMC Memory Card. **Table 42** shows how they are shared. In **Table 42**, all I/O pads have embedded both pull up and pull down resistor because they are shared by both the Memory Stick and SD/MMC Memory Card. Pins 2,4,5,8 are only useful for SD/MMC Memory Card. Pull down resistor for these pins can be used for power saving. All embedded pull-up and pull-down resistors can be disabled by programming the corresponding control registers if optimal pull-up or pull-down resistors are required on the system board. The pin VDDPD is used for power saving. Power for Memory Stick or SD/MMC Memory Card can be shut down by programming the corresponding control register. The pin WP (Write Protection) is only valid when the controller is configured for SD/MMC Memory Card. It is used to detect the status of Write Protection Switch on SD/MMC Memory Card.

No.	Name	Type	MMC	SD	MS	MSPRO	Description
1	SD_CLK	O	CLK	CLK	SCLK	SCLK	Clock
2	SD_DAT3	I/O/PP		CD/DAT3		DAT3	Data Line [Bit 3]
3	SD_DAT0	I/O/PP	DAT0	DAT0	SDIO	DAT0	Data Line [Bit 0]
4	SD_DAT1	I/O/PP		DAT1		DAT1	Data Line [Bit 1]
5	SD_DAT2	I/O/PP		DAT2		DAT2	Data Line [Bit 2]
6	SD_CMD	I/O/PP	CMD	CMD	BS	BS	Command Or Bus State
7	SD_PWRON	O					VDD ON/OFF
8	SD_WP	I					Write Protection Switch in SD
9	SD_INS	I	VSS2	VSS2	INS	INS	Card Detection

Table 42 Sharing of pins for Memory Stick and SD/MMC Memory Card Controller

6.4.2.2 Card Detection

For Memory Stick, the host or connector should provide a pull up resistor on the signal INS. Therefore, the signal INS will be logic high if no Memory Stick is on line. The scenario of card detection for Memory Stick is shown in **Figure 12**. Before Memory Stick is inserted or powered on, on host side SW1 shall be closed and SW2 shall be opened for card detection. It is the default setting when the controller is powered on. Upon insertion of Memory Stick, the signal INS will have a transition from high to low. Hereafter, if Memory Stick is removed then the signal INS will return to logic high. If card insertion is intended to not be supported, SW1 shall be opened and SW2 closed always.

For SD/MMC Memory Card, detection of card insertion/removal by hardware is also supported. Because a pull down resistor with about 470 KΩ resistance which is impractical to embed in an I/O pad is needed on the signal CD/DAT3, and it has to be capable of being connected or disconnected dynamically onto the signal CD during initialization period, an additional I/O pad is needed to switch on/off the pull down resistor on the system board. The scenario of card detection for SD/MMC Memory Card is shown in **Figure 13**. Before SD/MMC Memory Card is inserted or powered on, SW1 and SW2 shall be opened for card detection on the host side. Meanwhile, pull down resistor R_{CD} on system board shall attach onto the signal CD/DAT3 by the output signal RCDEN. In addition, SW3 on the card is default to be closed. Upon insertion of SD/MMC Memory Card, the signal CD/DAT3 will have a transition from low to high. If SD/MMC Memory Card is removed then the signal CD/DAT3 will return to logic low. After the card identification process, pull down resistor R_{CD} on system board shall disconnect with the signal CD/DAT3 and SW3 on the card shall be opened for normal operation.

Since the scheme above needs a mechanical switch such as a relay on system board, it is not ideal enough. Thus, a dedicated pin "INS" is used to perform card insertion and removal for SD/MMC. The pin "INS" will connect to the pin

MTK Confidential Release for Konka

"VSS2" of a SD/MMC connector. Then the scheme of card detection is the same as that for MS. It is shown in **Figure 12**.

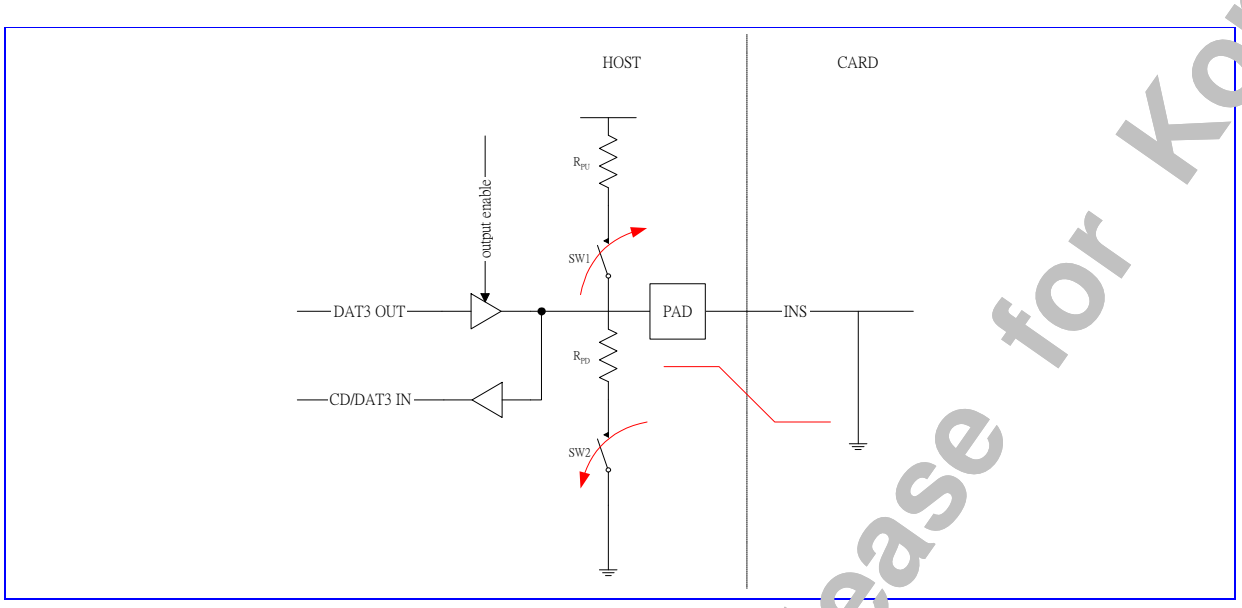

Figure 12 Card detection for Memory Stick

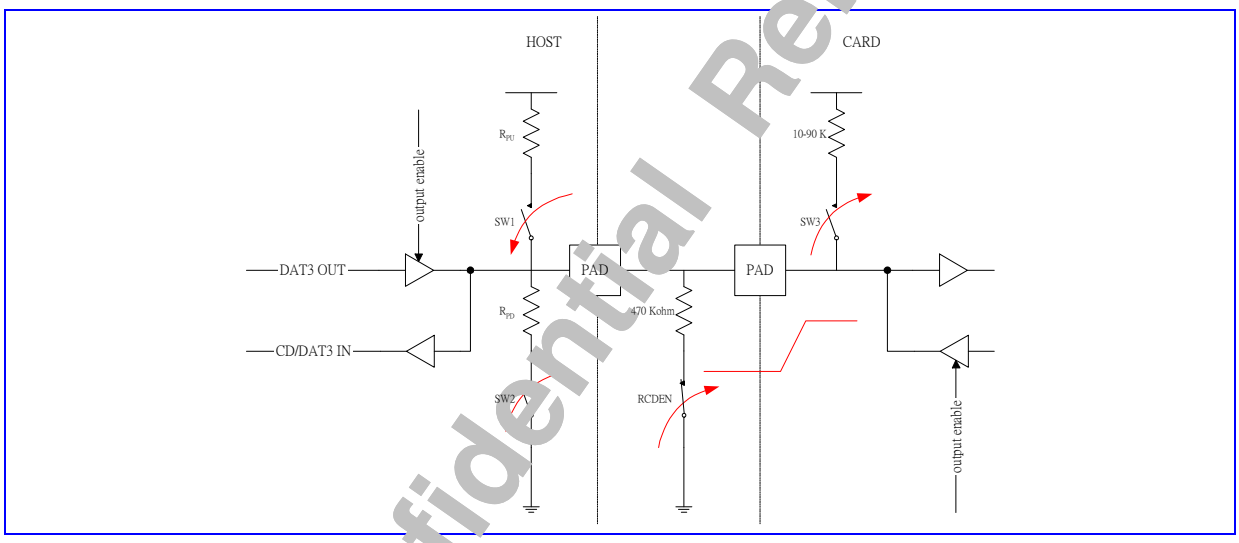

Figure 13 Card detection for SD/MMC Memory Card

MTK Confidential Release for Konka

6.4.3 Register Definitions

REGISTER ADDRESS	REGISTER NAME	SYNONYM
MSDC + 0000h	MS/SD Memory Card Controller Configuration Register	MSDC_CFG
MSDC + 0004h	MS/SD Memory Card Controller Status Register	MSDC_STA
MSDC + 0008h	MS/SD Memory Card Controller Interrupt Register	MSDC_INT
MSDC + 000Ch	MS/SD Memory Card Controller Data Register	MSDC_DAT
MSDC + 00010h	MS/SD Memory Card Pin Status Register	MSDC_PS
MSDC + 00014h	MS/SD Memory Card Controller IO Control Register	MSDC_IOCON
MSDC + 0020h	SD Memory Card Controller Configuration Register	SDC_CFG
MSDC + 0024h	SD Memory Card Controller Command Register	SDC_CMD
MSDC + 0028h	SD Memory Card Controller Argument Register	SDC_ARG
MSDC + 002Ch	SD Memory Card Controller Status Register	SDC_STA
MSDC + 0030h	SD Memory Card Controller Response Register 0	SDC_RESP0
MSDC + 0034h	SD Memory Card Controller Response Register 1	SDC_RESP1
MSDC + 0038h	SD Memory Card Controller Response Register 2	SDC_RESP2
MSDC + 003Ch	SD Memory Card Controller Response Register 3	SDC_RESP3
MSDC + 0040h	SD Memory Card Controller Command Status Register	SDC_CMDSTA
MSDC + 0044h	SD Memory Card Controller Data Status Register	SDC_DATSTA
MSDC + 0048h	SD Memory Card Status Register	SDC_CSTA
MSDC + 004Ch	SD Memory Card IRQ Mask Register 0	SDC_IRQMASK0
MSDC + 0050h	SD Memory Card IRQ Mask Register 1	SDC_IRQMASK1
MSDC + 0054h	SDIO Configuration Register	SDIO_CFG
MSDC + 0058h	SDIO Status Register	SDIO_STA
MSDC + 0060h	Memory Stick Controller Configuration Register	MSC_CFG
MSDC + 0064h	Memory Stick Controller Command Register	MSC_CMD
MSDC + 0068h	Memory Stick Controller Auto Command Register	MSC_ACMD
MSDC + 006Ch	Memory Stick Controller Status Register	MSC_STA

Table 43 MS/SD Controller Register Map

6.4.3.1 Global Register Definitions

MSDC+0000h **MS/SD Memory Card Controller Configuration Register** **MSDC_CFG**

Bit	31	30	29	28	27	26	25	24	23	22	21	20	19	18	17	16
Name	FIFOTHD				PRCFG2		PRCFG1		PRCFG0		VDDPD	RCDEN	DIRQEN	PINEN	DMAEN	INTEN
Type	R/W				R/W		R/W		R/W		R/W	R/W	R/W	R/W	R/W	R/W
Reset	0001				01		01		10		0	0	0	0	0	0
Bit	15	14	13	12	11	10	9	8	7	6	5	4	3	2	1	0
Name	SCLKF								SCLKON	CRED	STDBY	CLKSRC	RST	NOCRC	RED	MSDC
Type	R/W								R/W	R/W	R/W	R/W	W	R/W	R/W	R/W
Reset	00000000								0	0	1	0	0	0	0	0

MTK Confidential Release for Konka

The register is for general configuration of the MS/SD controller. Note that MSDC_CFG[31:16] can be accessed by 16-bit APB bus access.

MSDC The register bit is used to configure the controller as the host of Memory Stick or as the host of SD/MMC Memory card. The default value is to configure the controller as the host of Memory Stick.

- **0** Configure the controller as the host of Memory Stick
- **1** Configure the controller as the host of SD/MMC Memory card

RED Rise Edge Data. The register bit is used to determine that serial data input is latched at the falling edge or the rising edge of serial clock. The default setting is at the rising edge. If serial data has worse timing, set the register bit to '1'. **When memory card has worse timing on return read data, set the register bit to '1'.**

- **0** Serial data input is latched at the rising edge of serial clock.
- **1** Serial data input is latched at the falling edge of serial clock.

NOCRC CRC Disable. A '1' indicates that data transfer without CRC is desired. For write data block, data will be transmitted without CRC. For read data block, CRC will not be checked. It is for testing purpose.

- **0** Data transfer with CRC is desired.
- **1** Data transfer without CRC is desired.

RST Software Reset. Writing a '1' to the register bit will cause internal synchronous reset of MS/SD controller, but does not reset register settings.

- **0** Otherwise
- **1** Reset MS/SD controller

CLKSRC The register bit specifies which clock is used as source clock of memory card. If MUC clock is used, the fastest clock rate for memory card is 52/2=26MHz. If USB clock is used, the fastest clock rate for memory card is 48/2=24MHz.

- **0** Use MCU clock as source clock of memory card.
- **1** Use USB clock as source clock of memory card.

STDBY Standby Mode. If the module is powered down, operating clock to the module will be stopped. At the same time, clock to card detection circuitry will also be stopped. If detection of memory card insertion and removal is desired, write '1' to the register bit. If interrupt for detection of memory card insertion and removal is enabled, interrupt will take place whenever memory is inserted or removed.

- **0** Standby mode is disabled.
- **1** Standby mode is enabled.

CRED Card Rise Edge Data. The register bit is used to determine that serial data from memory card is output at the falling edge or the rising edge of serial clock. The default setting is at the falling edge.

- **0** Serial data is output at the falling edge of serial clock.
- **1** Serial data is output at the rising edge of serial clock.

SCLKON Serial Clock Always On. It is for debugging purpose.

- **0** Not to have serial clock always on.
- **1** To have serial clock always on.

SCLKF The register field controls clock frequency of serial clock on MS/SD bus. Denote clock frequency of MS/SD bus serial clock as f_{slave} and clock frequency of the MS/SD controller as f_{host} which is 104 or 52 MHz. Then the value of the register field is as follows. **Note that the allowable maximum frequency of f_{slave} is 26MHz**.

00000000b $f_{slave} = (1/2) * f_{host}$

00000001b $f_{slave} = (1/(4*1)) * f_{host}$

00000010b $f_{slave} = (1/(4*2)) * f_{host}$

00000011b $f_{slave} = (1/(4*3)) * f_{host}$

…

00010000b $f_{slave} = (1/(4*16)) * f_{host}$

…

MTK Confidential Release for Konka

11111111b $f_{slave} = (1/(4*255)) * f_{host}$

INTEN Interrupt Enable. Note that if interrupt capability is disabled then application software must poll the status of the register MSDC_STA to check for any interrupt request.

- **0** Interrupt induced by various conditions is disabled, no matter the controller is configured as the host of either SD/MMC Memory Card or Memory Stick.
- **1** Interrupt induced by various conditions is enabled, no matter the controller is configured as the host of either SD/MMC Memory Card or Memory Stick.

DMAEN DMA Enable. Note that if DMA capability is disabled then application software must poll the status of the register MSDC_STA for checking any data transfer request. If DMA is desired, the register bit must be set before command register is written.

- **0** DMA request induced by various conditions is disabled, no matter the controller is configured as the host of either SD/MMC Memory Card or Memory Stick.
- **1** DMA request induced by various conditions is enabled, no matter the controller is configured as the host of either SD/MMC Memory Card or Memory Stick.

PINEN Pin Interrupt Enable. The register bit is used to control if the pin for card detection is used as an interrupt source.

- **0** The pin for card detection is not used as an interrupt source.
- **1** The pin for card detection is used as an interrupt source.

DIRQEN Data Request Interrupt Enable. The register bit is used to control if data request is used as an interrupt source.

- **0** Data request is not used as an interrupt source.
- **1** Data request is used as an interrupt source.

RCDEN The register bit controls the output pin RCDEN that is used for card identification process when the controller is for SD/MMC Memory Card. Its output will control the pull down resistor on the system board to connect or disconnect with the signal CD/DAT3.

- **0** The output pin RCDEN will output logic low.
- **1** The output pin RCDEN will output logic high.

VDDPD The register bit controls the output pin VDDPD that is used for power saving. The output pin VDDPD will control power for memory card.

- **0** The output pin VDDPD will output logic low. The power for memory card will be turned off.
- **1** The output pin VDDPD will output logic high. The power for memory card will be turned on.

PRCFG0 Pull Up/Down Register Configuration for the pin WP. The default value is 10.

- **00** Pull up resistor and pull down resistor in the I/O pad of the pin WP are all disabled.
- **01** Pull down resistor in the I/O pad of the pin WP is enabled.
- **10** Pull up resistor in the I/O pad of the pin WP is enabled.
- **11** Use keeper of IO pad.

PRCFG1 Pull Up/Down Register Configuration for the pin CMD/BS. The default value is 0b01.

- **00** Pull up resistor and pull down resistor in the I/O pad of the pin CMD/BS are all disabled.
- **01** Pull down resistor in the I/O pad of the pin CMD/BS is enabled.
- **10** Pull up resistor in the I/O pad of the pin CMD/BS is enabled.
- **11** Use keeper of IO pad.

PRCFG2 Pull Up/Down Register Configuration for the pins DAT0, DAT1, DAT2, DAT3. The default value is 0b01.

MTK Confidential Release for Konka

00 Pull up resistor and pull down resistor in the I/O pads o the pins DAT0, DAT1, DAT2, DAT3. are all disabled.

01 Pull down resistor in the I/O pads of the pins DAT0, DAT1, DAT2, DAT3 and WP. is enabled.

10 Pull up resistor in the I/O pads of the pins DAT0, DAT1, DAT2, DAT3. is enabled.

11 Use keeper of IO pad.

FIFOTHD FIFO Threshold. The register field determines when to issue a DMA request. For write transactions, DMA requests will be asserted if the number of free entries in FIFO are larger than or equal to the value in the register field. For read transactions, DMA requests will be asserted if the number of valid entries in FIFO are larger than or equal to the value in the register field. The register field must be set according to the setting of data transfer count in DMA burst mode. If single mode for DMA transfer is used, the register field shall be set to 0b0001.

0000 Invalid.

0001 Threshold value is 1.

0010 Threshold value is 2.

…

1000 Threshold value is 8.

others Invalid

MSDC+0004h MS/SD Memory Card Controller Status Register MSDC_STA

Bit	15	14	13	12	11	10	9	8	7	6	5	4	3	2	1	0
Name	BUSY	FIFOCLR							FIFOCNT				INT	DRQ	BE	BF
Type	R	W							RO				RO	RO	RO	RO
Reset	0	-							0000				0	0	0	0

The register contains the status of FIFO, interrupts and data requests.

BF The register bit indicates if FIFO in MS/SD controller is full.

0 FIFO in MS/SD controller is not full.

1 FIFO in MS/SD controller is full.

BE The register bit indicates if FIFO in MS/SD controller is empty.

0 FIFO in MS/SD controller is not empty.

1 FIFO in MS/SD controller is empty.

DRQ The register bit indicates if any data transfer is required. While any data transfer is required, the register bit still will be active even if the register bit DIRQEN in the register MSDC_CFG is disabled. Data transfer can be achieved by DMA channel alleviating MCU loading, or by polling the register bit to check if any data transfer is requested. While the register bit DIRQEN in the register MSDC_CFG is disabled, the second method is used.

0 No DMA request exists.

1 DMA request exists.

INT The register bit indicates if any interrupt exists. While any interrupt exists, the register bit still will be active even if the register bit INTEN in the register MSDC_CFG is disabled. MS/SD controller can interrupt MCU by issuing interrupt request to Interrupt Controller, or software/application polls the register endlessly to check if any interrupt request exists in MS/SD controller. While the register bit INTEN in the register MSDC_CFG is disabled, the second method is used. For read commands, it is possible that timeout error takes place. Software can read the status register to check if timeout error takes place without OS time tick support or data request is asserted. Note that the register bit will be cleared when reading the register MSDC_INT.

0 No interrupt request exists.

1 Interrupt request exists.

FIFOCNT FIFO Count. The register field shows how many valid entries are in FIFO.

MTK Confidential Release for Konka

0000 There is 0 valid entry in FIFO.
0001 There is 1 valid entry in FIFO.
0010 There are 2 valid entries in FIFO.
…
1000 There are 8 valid entries in FIFO.
others Invalid

FIFOCLR Clear FIFO. Writing '1' to the register bit will cause the content of FIFO clear and reset the status of FIFO controller.
0 No effect on FIFO.
1 Clear the content of FIFO clear and reset the status of FIFO controller.

BUSY Status of the controller. If the controller is in busy state, the register bit will be '1'. Otherwise '0'.
0 The controller is in busy state.
1 The controller is in idle state.

MSDC+0008h MS/SD Memory Card Controller Interrupt Register MSDC_INT

Bit	15	14	13	12	11	10	9	8	7	6	5	4	3	2	1	0
Name									SDIOIRQ	SDR1BIRQ	MSIFIRQ	SDMCIRQ	SDDATIRQ	SDCMDIRQ	PINIRQ	DIRQ
Type									RC	RC	RC	RC	RC	RC	RC	RC
Reset									0	0	0	0	0	0	0	0

The register contains the status of interrupts. Note that the register still show status of interrupt even though interrupt is disabled, that is, the register bit INTEN of the register MSDC_CFG is set to '0. It implies that software interrupt can be implemented by polling the register bit INT of the register MSDC_STA and this register. **However, if hardware interrupt is desired, remember to clear the register before setting the register bit INTEN of the register MSDC_CFG to '1'. Or undesired hardware interrupt arisen from previous interrupt status may take place.**

DIRQ Data Request Interrupt. The register bit indicates if any interrupt for data request exists. Whenever data request exists and data request as an interrupt source is enabled, i.e., the register bit DIRQEN in the register MSDC_CFG is set to '1', the register bit will be active. It will be reset when reading it. For software, data requests can be recognized by polling the register bit DRQ or by data request interrupt. Data request interrupts will be generated every FIFOTHD data transfers.
0 No Data Request Interrupt.
1 Data Request Interrupt occurs.

PINIRQ Pin Change Interrupt. The register bit indicates if any interrupt for memory card insertion/removal exists. Whenever memory card is inserted or removed and card detection interrupt is enabled, i.e., the register bit PINEN in the register MSDC_CFG is set to '1', the register bit will be set to '1'. It will be reset when the register is read.
0 Otherwise.
1 Card is inserted or removed.

SDCMDIRQ SD Bus CMD Interrupt. The register bit indicates if any interrupt for SD CMD line exists. Whenever interrupt for SD CMD line exists, i.e., any bit in the register SDC_CMDSTA is active, the register bit will be set to '1' if interrupt is enabled. It will be reset when the register is read.
0 No SD CMD line interrupt.
1 SD CMD line interrupt exists.

SDDATIRQ SD Bus DAT Interrupt. The register bit indicates if any interrupt for SD DAT line exists. Whenever interrupt for SD DAT line exists, i.e., any bit in the register SDC_ DATSTA is active, the register bit will be set to '1' if interrupt is enabled. It will be reset when the register is read.
0 No SD DAT line interrupt.
1 SD DAT line interrupt exists.

MTK Confidential Release for Konka

SDMCIRQ SD Memory Card Interrupt. The register bit indicates if any interrupt for SD Memory Card exists. Whenever interrupt for SD Memory Card exists, i.e., any bit in the register SDC_CSTA is active, the register bit will be set to '1' if interrupt is enabled. It will be reset when the register is read.

- **0** No SD Memory Card interrupt.
- **1** SD Memory Card interrupt exists.

MSIFIRQ MS Bus Interface Interrupt. The register bit indicates if any interrupt for MS Bus Interface exists. Whenever interrupt for MS Bus Interface exists, i.e., any bit in the register MSC_STA is active, the register bit will be set to '1' if interrupt is enabled. It will be reset when the register MSDC_STA or MSC_STA is read.

- **0** No MS Bus Interface interrupt.
- **1** MS Bus Interface interrupt exists.

SDR1BIRQ SD/MMC R1b Response Interrupt. The register bit will be active when a SD/MMC command with R1b response finishes and the DAT0 line has transition from busy to idle state. **Single block write commands with R1b response will cause the interrupt when the command completes no matter successfully or with CRC error. However, multi-block write commands with R1b response do not cause the interrupt because multi-block write commands are always stopped by STOP_TRANS commands. STOP_TRANS commands (with R1b response) behind multi-block write commands will cause the interrupt. Single block read command with R1b response will cause the interrupt when the command completes but multi-block read commands do not. Note that STOP_TRANS commands (with R1b response) behind multi-block read commands will cause the interrupt.**

- **0** No interrupt for SD/MMC R1b response.
- **1** Interrupt for SD/MMC R1b response exists.

MSDC+000Ch MS/SD Memory Card Controller Data Register MSDC_DAT

Bit	31	30	29	28	27	26	25	24	23	22	21	20	19	18	17	16
Name	DATA[31:16]															
Type	R/W															
Bit	15	14	13	12	11	10	9	8	7	6	5	4	3	2	1	0
Name	DATA[15:0]															
Type	R/W															

The register is used to read/write data from/to FIFO inside MS/SD controller. Data access is in unit of 32 bits.

MSDC+0010h MS/SD Memory Card Pin Status Register MSDC_PS

Bit	31	30	29	28	27	26	25	24	23	22	21	20	19	18	17	16
Name								CMD	DAT							
Type								RO	RO							
Reset								-	-							
Bit	15	14	13	12	11	10	9	8	7	6	5	4	3	2	1	0
Name	CDDEBOUNCE											PINCHG	PIN0	POEN0	PIEN0	CDEN
Type	RW											RC	RO	R/W	R/W	R/W
Reset	0000											0	1	0	0	0

The register is used for card detection. When the memory card controller is powered on, and the system is powered on, the power for the memory card is still off unless power has been supplied by the PMIC. Meanwhile, pad for card detection defaults to pull down when the system is powered on. The scheme of card detection for MS is the same as that for SD/MMC.

For detecting card insertion, first pull up INS pin, and then enable card detection and input pin at the same time. After 32 cycles of controller clock, status of pin changes will emerge. For detecting card removal, just keep enabling card detection and input pin.

CDEN Card Detection Enable. The register bit is used to enable or disable card detection.

MTK Confidential Release for Konka

0 Card detection is disabled.

1 Card detection is enabled.

PIEN0 The register bit is used to control input pin for card detection.

0 Input pin for card detection is disabled.

1 Input pin for card detection is enabled.

POEN0 The register bit is used to control output of input pin for card detection.

0 Output of input pin for card detection is disabled.

1 Output of input pin for card detection is enabled.

PIN0 The register shows the value of input pin for card detection.

0 The value of input pin for card detection is logic low.

1 The value of input pin for card detection is logic high.

PINCHG Pin Change. The register bit indicates the status of card insertion/removal. If memory card is inserted or removed, the register bit will be set to '1' no matter pin change interrupt is enabled or not. It will be cleared when the register is read.

0 Otherwise.

1 Card is inserted or removed.

CDDEBOUNCE The register field specifies the time interval for card detection de-bounce. Its default value is 0. It means that de-bounce interval is 32 cycle time of 32KHz. The interval will extend one cycle time of 32KHz by increasing the counter by 1.

DAT Memory Card Data Lines.

CMD Memory Card Command Lines.

MSDC+0014h MS/SD Memory Card Controller IO Control Register MSDC_IOCON

Bit	15	14	13	12	11	10	9	8	7	6	5	4	3	2	1	0
Name							PRCFG3		SRCFG1	SRCFG0	ODCCFG1			ODCCFG0		
Type							R/W		R/W	R/W	R/W			R/W		
Reset							10		1	1	000			011		

The register specifies **Output Driving Capability** and **Slew Rate** of IO pads for MSDC. The reset value is suggestion setting. If output driving capability of the pins DAT0, DAT1, DAT2 and DAT3 is too large, it's possible to arise ground bounce and thus result in glitch on SCLK.

ODCCFG0 Output driving capability the pins CMD/BS and SCLK

000 2mA

001 4mA

010 6mA

011 8mA

ODCCFG1 Output driving capability the pins DAT0, DAT1, DAT2 and DAT3

000 2mA

001 4mA

010 6mA

011 8mA

SRCFG0 Output driving capability the pins CMD/BS and SCLK

0 Fast Slew Rate

1 Slow Slew Rate

SRCFG1 Output driving capability the pins DAT0, DAT1, DAT2 and DAT3

0 Fast Slew Rate

1 Slow Slew Rate

PRCFG3 Pull Up/Down Register Configuration for the pin INS. The default value is 10.

MTK Confidential Release for Konka

00 Pull up resistor and pull down resistor in the I/O pad of the pin INS are all disabled.
01 Pull down resistor in the I/O pad of the pin INS is enabled.
10 Pull up resistor in the I/O pad of the pin INS is enabled.
11 Use keeper of IO pad.

6.4.3.2 SD Memory Card Controller Register Definitions

MSDC+0020h SD Memory Card Controller Configuration Register SDC_CFG

Bit	31	30	29	28	27	26	25	24	23	22	21	20	19	18	17	16
Name	DTOC								WDOD				SDIO	MDLW8	MDLEN	SIEN
Type	R/W								R/W				R/W	R/W	R/W	R/W
Reset	00000000								0000				0	0	0	0
Bit	15	14	13	12	11	10	9	8	7	6	5	4	3	2	1	0
Name	BSYDLY				BLKLEN											
Type	R/W				R/W											
Reset	1000				00000000000											

The register is used for configuring the MS/SD Memory Card Controller when it is configured as the host of SD Memory Card. If the controller is configured as the host of Memory Stick, the contents of the register have no impact on the operation of the controller. Note that SDC_CFG[31:16] can be accessed by 16-bit APB bus access.

BLKLEN It refers to Block Length. The register field is used to define the length of one block in unit of byte in a data transaction. The maximal value of block length is 2048 bytes.

000000000000 Reserved.
000000000001 Block length is 1 byte.
000000000010 Block length is 2 bytes.
…
011111111111 Block length is 2047 bytes.
100000000000 Block length is 2048 bytes.

BSYDLY The register field is only valid for the commands with R1b response. If the command has a response of R1b type, MS/SD controller must monitor the data line 0 for card busy status from the bit time that is two serial clock cycles after the command end bit to check if operations in SD/MMC Memory Card have finished. The register field is used to expand the time between the command end bit and end of detection period to detect card busy status. If time is up and there is no card busy status on data line 0, then the controller will abandon the detection.

0000 No extend.
0001 Extend one more serial clock cycle.
0010 Extend two more serial clock cycles.
…
1111 Extend fifteen more serial clock cycle.

SIEN Serial Interface Enable. It should be enabled as soon as possible before any command.

0 Serial interface for SD/MMC is disabled.
1 Serial interface for SD/MMC is enabled.

MDLW8 Eight Data Line Enable. The register works when MDLEN is enabled. The register can be enabled only when MultiMediaCard 4.0 is applied and detected by software application.

0 4-bit Data line is enabled.
1 8-bit Data line is enabled.

SDIO SDIO Enable.

0 SDIO mode is disabled

MTK Confidential Release for Konka

1 SDIO mode is enabled

MDLEN Multiple Data Line Enable. The register can be enabled only when SD Memory Card is applied and detected by software application. It is the responsibility of the application to program the bit correctly when an MultiMediaCard is applied. If an MultiMediaCard is applied and 4-bit data line is enabled, then 4 bits will be output every serial clock. Therefore, data integrity will fail.

0 4-bit Data line is disabled.

1 4-bit Data line is enabled.

WDOD Write Data Output Delay. The period from finish of the response for the initial host write command or the last write data block in a multiple block write operation to the start bit of the next write data block requires at least two serial clock cycles. The register field is used to extend the period (Write Data Output Delay) in unit of one serial clock.

0000 No extend.

0001 Extend one more serial clock cycle.

0010 Extend two more serial clock cycles.

…

1111 Extend fifteen more serial clock cycle.

DTOC Data Timeout Counter. The period from finish of the initial host read command or the last read data block in a multiple block read operation to the start bit of the next read data block requires at least two serial clock cycles. The counter is used to extend the period (Read Data Access Time) in unit of 65,536 serial clock. See the register field description of the register bit RDINT for reference.

00000000 Extend 65,536 more serial clock cycle.

00000001 Extend 65,536x2 more serial clock cycle.

00000010 Extend 65,536x3 more serial clock cycle.

…

11111111 Extend 65,536x 256 more serial clock cycle.

MSDC+0024h SD Memory Card Controller Command Register SDC_CMD

Bit	31	30	29	28	27	26	25	24	23	22	21	20	19	18	17	16
Name																CMDFAIL
Type																R/W
Reset																0

Bit	15	14	13	12	11	10	9	8	7	6	5	4	3	2	1	0
Name	INTC	STOP	RW	DTYPE		IDRT	RSPTYP			BREAK	CMD					
Type	R/W	R/W	R/W	R/W		R/W	R/W			R/W	R/W					
Reset	0	0	0	00		0	000			0	000000					

The register defines a SD Memory Card command and its attribute. Before MS/SD controller issues a transaction onto SD bus, application shall specify other relative setting such as argument for command. After application writes the register, MS/SD controller will issue the corresponding transaction onto SD serial bus. If the command is GO_IDLE_STATE, the controller will have serial clock on SD/MMC bus run 128 cycles before issuing the command.

CMD SD Memory Card command. It is totally 6 bits.

BREAK Abort a pending MMC GO_IRQ_MODE command. It is only valid for a pending GO_IRQ_MODE command waiting for MMC interrupt response.

0 Other fields are valid.

1 Break a pending MMC GO_IRQ_MODE command in the controller. Other fields are invalid.

RSPTYP The register field defines response type for the command. For commands with R1 and R1b response, the register SDC_CSTA (not SDC_STA) will update after response token is received. This register SDC_CSTA contains the status of the SD/MMC and it will be used as response interrupt sources. Note that if CMD7 is

MTK Confidential Release for Konka

used with all 0's RCA then RSPTYP must be "000". And the command "GO_TO_IDLE" also have RSPTYP='000'.

000 There is no response for the command. For instance, broadcast command without response and GO_INACTIVE_STATE command.

001 The command has R1 response. R1 response token is 48-bit.

010 The command has R2 response. R2 response token is 136-bit.

011 The command has R3 response. Even though R3 is 48-bit response, but it does not contain CRC checksum.

100 The command has R4 response. R4 response token is 48-bit. (Only for MMC)

101 The command has R5 response. R5 response token is 48-bit. (Only for MMC)

110 The command has R6 response. R6 response token is 48-bit.

111 The command has R1b response. If the command has a response of R1b type, MS/SD controller must monitor the data line 0 for card busy status from the bit time that is two or four serial clock cycles after the command end bit to check if operations in SD/MMC Memory Card have finished. There are two cases for detection of card busy status. The first case is that the host stops the data transmission during an active write data transfer. The card will assert busy signal after the stop transmission command end bit followed by four serial clock cycles. The second case is that the card is in idle state or under a scenario of receiving a stop transmission command between data blocks when multiple block write command is in progress. The register bit is valid only when the command has a response token.

Note that the response type R4 and R5 mentioned above is for MMC only.

For SDIO, RSPTYP definition is different and shall be set to :

001 **(i) CMD5 of SDIO is to be issued. (Where the response is defined as R4 in SDIO spec)**
(ii) CMD52 or CMD53 for READ is to be issued. (Where the response is defined as R5 in SDIO spec)

111 **CMD52 for I/O abort or CMD53 for WRITE is to be issued (Where the response is defined as R5 in SDIO spec)**

IDRT Identification Response Time. The register bit indicates if the command has a response with N_{ID} (that is, 5 serial clock cycles as defined in SD Memory Card Specification Part 1 Physical Layer Specification version 1.0) response time. The register bit is valid only when the command has a response token. Thus the register bit must be set to '1' for CMD2 (ALL_SEND_CID) and ACMD41 (SD_APP_OP_CMD).

0 Otherwise.

1 The command has a response with N_{ID} response time.

DTYPE The register field defines data token type for the command.

00 No data token for the command

01 Single block transaction

10 Multiple block transaction. That is, the command is a multiple block read or write command.

11 Stream operation. It only shall be used when an MultiMediaCard is applied.

RW The register bit defines the command is a read command or write command. The register bit is valid only when the command will cause a transaction with data token.

0 The command is a read command.

1 The command is a write command.

STOP The register bit indicates if the command is a stop transmission command. **It should be set to 1 when CMD12 (SD/MMC) or CMD52 with I/O abort (SDIO) is to be issued.**

0 The command is not a stop transmission command.

1 The command is a stop transmission command.

INTC The register bit indicates if the command is GO_IRQ_STATE. If the command is GO_IRQ_STATE, the period between command token and response token will not be limited.

MTK Confidential Release for Konka

0 The command is not GO_IRQ_STATE.

1 The command is GO_IRQ_STATE.

CMDFAIL The register bit is used for controlling SDIO interrupt period when CRC error or Command/Data timeout condition occurs. It is useful only when SDIO 4-bit mode is activated.

0 SDIO Interrupt period will re-start after a stop command (CMD12) or I/O abort command (CMD52) is issued.

1 SDIO Interrupt period will re-start whenever DAT line is not busy.

MSDC+0028h SD Memory Card Controller Argument Register SDC_ARG

Bit	31	30	29	28	27	26	25	24	23	22	21	20	19	18	17	16
Name	ARG [31:16]															
Type	R/W															
Bit	15	14	13	12	11	10	9	8	7	6	5	4	3	2	1	0
Name	ARG [15:0]															
Type	R/W															

The register contains the argument of the SD/MMC Memory Card command.

MSDC+002Ch SD Memory Card Controller Status Register SDC_STA

Bit	15	14	13	12	11	10	9	8	7	6	5	4	3	2	1	0
Name	WP											R1BSY	RSV	DATBUSY	CMDBUSY	SDCBUSY
Type	R											RO	RO	RO	RO	RO
Reset	-											0	0	0	0	0

The register contains various status of MS/SD controller as the controller is configured as the host of SD Memory Card.

SDCBUSY The register field indicates if MS/SD controller is busy, that is, any transmission is going on CMD or DAT line on SD bus.

0 MS/SD controller is idle.

1 MS/SD controller is busy.

CMDBUSY The register field indicates if any transmission is going on CMD line on SD bus.

0 No transmission is going on CMD line on SD bus.

1 There exists transmission going on CMD line on SD bus.

DATBUSY The register field indicates if any transmission is going on DAT line on SD bus. **For those commands without data but still involving DAT line, the register bit is useless. For example, if an Erase command is issued, then checking if the register bit is '0' before issuing next command with data would not guarantee that the controller is idle. In this situation, use the register bit SDCBUSY.**

0 No transmission is going on DAT line on SD bus.

1 There exists transmission going on DAT line on SD bus.

R1BSY The register field shows the status of DAT line 0 for commands with R1b response.

0 SD/MMC Memory card is not busy.

1 SD/MMC Memory card is busy.

WP It is used to detect the status of Write Protection Switch on SD Memory Card. The register bit shows the status of Write Protection Switch on SD Memory Card. There is no default reset value. The pin WP (Write Protection) is also only useful while the controller is configured for SD Memory Card.

1 Write Protection Switch ON. It means that memory card is desired to be write-protected.

0 Write Protection Switch OFF. It means that memory card is writable.

MSDC+0030h SD Memory Card Controller Response Register 0 SDC_RESP0

Bit	31	30	29	28	27	26	25	24	23	22	21	20	19	18	17	16
Name	RESP [31:16]															

MTK Confidential Release for Konka

Type	RO															
Bit	15	14	13	12	11	10	9	8	7	6	5	4	3	2	1	0
Name	RESP [15:0]															
Type	RO															

The register contains parts of the last SD/MMC Memory Card bus response. See description for the register field SDC_RESP3.

MSDC+0034h SD Memory Card Controller Response Register 1 SDC_RESP1

Bit	31	30	29	28	27	26	25	24	23	22	21	20	19	18	17	16
Name	RESP [63:48]															
Type	RO															
Bit	15	14	13	12	11	10	9	8	7	6	5	4	3	2	1	0
Name	RESP [47:32]															
Type	RO															

The register contains parts of the last SD/MMC Memory Card bus response. See description for the register field SDC_RESP3.

MSDC+0038h SD Memory Card Controller Response Register 2 SDC_RESP2

Bit	31	30	29	28	27	26	25	24	23	22	21	20	19	18	17	16
Name	RESP [95:80]															
Type	RO															
Bit	15	14	13	12	11	10	9	8	7	6	5	4	3	2	1	0
Name	RESP [79:64]															
Type	RO															

The register contains parts of the last SD/MMC Memory Card bus response. See description for the register field SDC_RESP3.

MSDC+003Ch SD Memory Card Controller Response Register 3 SDC_RESP3

Bit	31	30	29	28	27	26	25	24	23	22	21	20	19	18	17	16
Name	RESP [127:112]															
Type	RO															
Bit	15	14	13	12	11	10	9	8	7	6	5	4	3	2	1	0
Name	RESP [111:96]															
Type	RO															

The register contains parts of the last SD/MMC Memory Card bus response. The register fields SDC_RESP0, SDC_RESP1, SDC_RESP2 and SDC_RESP3 compose the last SD/MMC Memory card bus response. For response of type R2, that is, response of the command ALL_SEND_CID, SEND_CSD and SEND_CID, only bit 127 to 0 of response token is stored in the register field SDC_RESP0, SDC_RESP1, SDC_RESP2 and SDC_RESP3. For response of other types, only bit 39 to 8 of response token is stored in the register field SDC_RESP0.

MSDC+0040h SD Memory Card Controller Command Status Register SDC_CMDSTA

Bit	15	14	13	12	11	10	9	8	7	6	5	4	3	2	1	0
Name													MMCIRQ	RSPCRCERR	CMDTO	CMDRDY
Type													RC	RC	RC	RC
Reset													0	0	0	0

MTK Confidential Release for Konka

The register contains the status of MS/SD controller during command execution and that of MS/SD bus protocol after command execution when MS/SD controller is configured as the host of SD/MMC Memory Card. The register will also be used as interrupt sources. The register will be cleared when reading the register. Meanwhile, if interrupt is enabled and thus interrupt caused by the register is generated, reading the register will deassert the interrupt.

CMDRDY For command without response, the register bit will be '1' once the command completes on SD/MMC bus. For command with response, the register bit will be '1' whenever the command is issued onto SD/MMC bus and its corresponding response is received **without CRC error**.

0 Otherwise.

1 Command with/without response finish successfully without CRC error.

CMDTO Timeout on CMD detected. A '1' indicates that MS/SD controller detected a timeout condition while waiting for a response on the CMD line.

0 Otherwise.

1 MS/SD controller detected a timeout condition while waiting for a response on the CMD line.

RSPCRCERR CRC error on CMD detected. A '1' indicates that MS/SD controller detected a CRC error **after reading a response from the CMD line.**

0 Otherwise.

1 MS/SD controller detected a CRC error after reading a response from the CMD line.

MMCIRQ MMC requests an interrupt. A '1' indicates that a MMC supporting command class 9 issued an interrupt request.

0 Otherwise.

1 A '1' indicates that a MMC supporting command class 9 issued an interrupt request.

MSDC+0044h SD Memory Card Controller Data Status Register SDC_DATSTA

Bit	15	14	13	12	11	10	9	8	7	6	5	4	3	2	1	0
Name														DATCRCERR	DATTO	BLKDONE
Type														RC	RC	RC
Reset														0	0	0

The register contains the status of MS/SD controller during data transfer on DAT line(s) when MS/SD controller is configured as the host of SD/MMC Memory Card. The register also will be used as interrupt sources. The register will be cleared when reading the register. Meanwhile, if interrupt is enabled and thus interrupt caused by the register is generated, reading the register will deassert the interrupt.

BLKDONE The register bit indicates the status of data block transfer.

0 Otherwise.

1 A data block was successfully transferred.

DATTO Timeout on DAT detected. A '1' indicates that MS/SD controller detected a timeout condition while waiting for data token on the DAT line.

0 Otherwise.

1 MS/SD controller detected a timeout condition while waiting for data token on the DAT line.

DATCRCERR CRC error on DAT detected. A '1' indicates that MS/SD controller detected a CRC error after reading a block of data from the DAT line or SD/MMC signaled a CRC error after writing a block of data to the DAT line.

0 Otherwise.

1 MS/SD controller detected a CRC error after reading a block of data from the DAT line or SD/MMC signaled a CRC error after writing a block of data to the DAT line.

MTK Confidential Release for Konka

MSDC+0048h SD Memory Card Status Register SDC_CSTA

Bit	31	30	29	28	27	26	25	24	23	22	21	20	19	18	17	16
Name	CSTA [31:16]															
Type	RC															
Reset	0000000000000000															
Bit	15	14	13	12	11	10	9	8	7	6	5	4	3	2	1	0
Name	CSTA [15:0]															
Type	RC															
Reset	0000000000000000															

After commands with R1 and R1b response this register contains the status of the SD/MMC card and it will be used as response interrupt sources. In all register fields, logic high indicates error and logic low indicates no error. The register will be cleared when reading the register. Meanwhile, if interrupt is enabled and thus interrupt caused by the register is generated, reading the register will deassert the interrupt.

CSTA31 **OUT_OF_RANGE**. The command's argument was out of the allowed range for this card.

CSTA30 **ADDRESS_ERROR**. A misaligned address that did not match the block length was used in the command.

CSTA29 **BLOCK_LEN_ERROR**. The transferred block length is not allowed for this card, or the number of transferred bytes does not match the block length.

CSTA28 **ERASE_SEQ_ERROR**. An error in the sequence of erase commands occurred.

CSTA27 **ERASE_PARAM**. An invalid selection of write-blocks for erase occurred.

CSTA26 **WP_VIOLATION**. Attempt to program a write-protected block.

CSTA25 Reserved. Return zero.

CSTA24 **LOCK_UNLOCK_FAILED**. Set when a sequence or password error has been detected in lock/unlock card command or if there was an attempt to access a locked card.

CSTA23 **COM_CRC_ERROR**. The CRC check of the previous command failed.

CSTA22 **ILLEGAL_COMMAND**. Command not legal for the card state.

CSTA21 **CARD_ECC_FAILED**. Card internal ECC was applied but failed to correct the data.

CSTA20 **CC_ERROR**. Internal card controller error.

CSTA19 **ERROR**. A general or an unknown error occurred during the operation.

CSTA18 **UNDERRUN**. The card could not sustain data transfer in stream read mode.

CSTA17 **OVERRUN**. The card could not sustain data programming in stream write mode.

CSTA16 **CID/CSD_OVERWRITE**. It can be either one of the following errors: 1. The CID register has been already written and cannot be overwritten 2. The read only section of the CSD does not match the card. 3. An attempt to reverse the copy (set as original) or permanent WP (unprotected) bits was made.

CSTA[15:4] Reserved. Return zero.

CSTA3 **AKE_SEQ_ERROR**. Error in the sequence of authentication process

CSTA[2:0] Reserved. Return zero.

MSDC+004Ch SD Memory Card IRQ Mask Register 0 SDC_IRQMASK 0

Bit	31	30	29	28	27	26	25	24	23	22	21	20	19	18	17	16
Name	IRQMASK [31:16]															
Type	R/W															
Reset	0000000000000000															
Bit	15	14	13	12	11	10	9	8	7	6	5	4	3	2	1	0
Name	IRQMASK [15:0]															
Type	R/W															
Reset	0000000000000000															

MTK Confidential Release for Konka

The register contains parts of SD Memory Card Interrupt Mask Register. See the register description of the register SDC_IRQMASK1 for reference. The register will mask interrupt sources from the register SDC_CMDSTA and SDC_DATSTA. IRQMASK[15:0] is for SDC_CMDSTA and IRQMASK[31:16] for SDC_DATSTA. A '1' in some bit of the register will mask the corresponding interrupt source with the same bit position. For example, if IRQMASK[0] is '1' then interrupt source from the register field CMDRDY of the register SDC_ CMDSTA will be masked. A '0' in some bit will not cause interrupt mask on the corresponding interrupt source from the register SDC_CMDSTA and SDC_DATSTA.

MSDC+0050h SD Memory Card IRQ Mask Register 1 — SDC_IRQMASK1

Bit	31	30	29	28	27	26	25	24	23	22	21	20	19	18	17	16
Name	IRQMASK [63:48]															
Type	R/W															
Reset	0000000000000000															
Bit	15	14	13	12	11	10	9	8	7	6	5	4	3	2	1	0
Name	IRQMASK [47:32]															
Type	R/W															
Reset	0000000000000000															

The register contains parts of SD Memory Card Interrupt Mask Register. The registers SDC_IRQMASK1 and SDC_IRQMASK0 compose the SD Memory Card Interrupt Mask Register. The register will mask interrupt sources from the register SDC_CSTA. A '1' in some bit of the register will mask the corresponding interrupt source with the same bit position. For example, if IRQMASK[63] is '1' then interrupt source from the register field OUT_OF_RANGE of the register SDC_ CSTA will be masked. A '0' in some bit will not cause interrupt mask on the corresponding interrupt source from the register SDC_ CSTA.

MSDC+0054h SDIO Configuration Register — SDIO_CFG

Bit	31	30	29	28	27	26	25	24	23	22	21	20	19	18	17	16
Name																
Type																
Reset																
Bit	15	14	13	12	11	10	9	8	7	6	5	4	3	2	1	0
Name														DSBSEL	INTSEL	INTEN
Type														R/W	R/W	R/W
Reset														0	0	0

The register is used to configure functionality for SDIO.

INTEN Interrupt enable for SDIO.

- **0** Disable
- **1** Enable

INTSEL Interrupt Signal Selection

- **0** Use data line 1 as interrupt signal
- **1** Use data line 5 as interrupt signal

DSBSEL Data Block Start Bit Selection.

- **0** Use data line 0 as start bit of data block and other data lines are ignored.
- **1** Start bit of a data block is received only when data line 0-3 all become low.

MSDC+0058h SDIO Status Register — SDIO_STA

Bit	31	30	29	28	27	26	25	24	23	22	21	20	19	18	17	16
Name																
Type																

MTK Confidential Release for Konka

Reset																
Bit	15	14	13	12	11	10	9	8	7	6	5	4	3	2	1	0
Name																**IRQ**
Type																RO
Reset																0

6.4.3.3 Memory Stick Controller Register Definitions

MSDC+0060h Memory Stick Controller Configuration Register MSC_CFG

Bit	15	14	13	12	11	10	9	8	7	6	5	4	3	2	1	0
Name	**PMODE**	**PRED**											**BUSYCNT**			**SIEN**
Type	R/W	R/W											R/W			R/W
Reset	0	0											101			0

The register is used for Memory Stick Controller Configuration when MS/SD controller is configured as the host of Memory Stick.

SIEN Serial Interface Enable. It should be enabled as soon as possible before any command.

- **0** Serial interface for Memory Stick is disabled.
- **1** Serial interface for Memory Stick is enabled.

BUSYCNT RDY timeout setting in unit of serial clock cycle. The register field is set to the maximum BUSY timeout time (set value x 4 +2) to wait until the RDY signal is output from the card. RDY timeout error detection is not performed when BUSYCNT is set to 0. The initial value is 0x5. That is, BUSY signal exceeding 5x4+2=22 serial clock cycles causes a RDY timeout error.

- **000** Not detect RDY timeout
- **001** BUSY signal exceeding 1x4+2=6 serial clock cycles causes a RDY timeout error.
- **010** BUSY signal exceeding 2x4+2=10 serial clock cycles causes a RDY timeout error.
- **…**
- **111** BUSY signal exceeding 7x4+2=30 serial clock cycles causes a RDY timeout error.

PRED Parallel Mode Rising Edge Data. The register field is only valid in parallel mode, that is, MSPRO mode. In parallel mode, data must be driven and latched at the falling edge of serial clock on MS bus. In order to mitigate hold time issue, the register can be set to '1' such that write data is driven by MSDC at the rising edge of serial clock on MS bus.

- **0** Write data is driven by MSDC at the falling edge of serial clock on MS bus.
- **1** Write data is driven by MSDC at the rising edge of serial clock on MS bus.

PMODE Memory Stick PRO Mode.

- **0** Use Memory Stick serial mode.
- **1** Use Memory Stick parallel mode.

MSDC+0064h Memory Stick Controller Command Register MSC_CMD

Bit	15	14	13	12	11	10	9	8	7	6	5	4	3	2	1	0
Name	**PID**						**DATASIZE**									
Type	R/W						R/W									
Reset	0000						0000000000									

The register is used for issuing a transaction onto MS bus. Transaction on MS bus is started by writing to the register MSC_CMD. The direction of data transfer, that is, read or write transaction, is extracted from the register field PID. 16-bit CRC will be transferred for a write transaction even if the register field DATASIZE is programmed as zero under the condition where the register field NOCRC in the register MSDC_CFG is '0'. If the register field NOCRC in the register MSDC_CFG is '1' and the register field DATASIZE is programmed as zero, then writing to the register

MTK Confidential Release for Konka

MSC_CMD will not induce transaction on MS bus. The same applies for when the register field RDY in the register MSC_STA is '0'.

DATASIZE Data size in unit of byte for the current transaction.

0000000000 Data size is 0 byte.
0000000001 Data size is one byte.
0000000010 Data size is two bytes.
…
0111111111 Data size is 511 bytes.
1000000000 Data size is 512 bytes.

PID Protocol ID. It is used to derive Transfer Protocol Code (TPC). The TPC can be derived by cascading PID and its reverse version. For example, if PID is 0x1, then TPC is 0x1e, that is, 0b0001 cascades 0b1110. In addition, the direction of the bus transaction can be determined from the register bit 15, that is, PID[3].

MSDC+0068h Memory Stick Controller Auto Command Register MSC_ACMD

Bit	15	14	13	12	11	10	9	8	7	6	5	4	3	2	1	0
Name	APID					ADATASIZE										ACEN
Type	R/W					R/W										R/W
Reset	0111					0000000001										0

The register is used for issuing a transaction onto MS bus automatically after the MS command defined in MSC_CMD completed on MS bus. Auto Command is a function used to automatically execute a command like GET_INT or READ_REG for checking status after SET_CMD ends. If auto command is enabled, the command set in the register will be executed once the INT signal on MS bus is detected. After auto command is issued onto MS bus, the register bit ACEN will become disabled automatically. Note that if auto command is enabled then the register bit RDY in the register MSC_STA caused by the command defined in MSC_CMD will be suppressed until auto command completes. Note that the register field ADATASIZE cannot be set to zero, or the result will be unpredictable.

ACEN Auto Command Enable.

0 Auto Command is disabled.
1 Auto Command is enabled.

ADATASIZE Data size in unit of byte for Auto Command. Initial value is 0x01.

0000000000 Data size is 0 byte.
0000000001 Data size is one byte.
0000000010 Data size is two bytes.
…
0111111111 Data size is 511 bytes.
1000000000 Data size is 512 bytes.

APID Auto Command Protocol ID. It is used to derive Transfer Protocol Code (TPC). Initial value is GSET_INT(0x7).

MSDC+006Ch Memory Stick Controller Status Register MSC_STA

Bit	15	14	13	12	11	10	9	8	7	6	5	4	3	2	1	0
Name	CMDNK	BREQ	ERR	CED								HSRDY	CRCER	TOER	SIF	RDY
Type	R	R	R	R								RO	RO	RO	RO	RO
Reset	0	0	0	0								0	0	0	0	1

The register contains various status of Memory Stick Controller, that is, MS/SD controller is configured as Memory Stick Controller. These statuses can be used as interrupt sources. Reading the register will NOT clear it. The register will be cleared whenever a new command is written to the register MSC_CMD.

MTK Confidential Release for Konka

RDY The register bit indicates the status of transaction on MS bus. The register bit will be cleared when writing to the command register MSC_CMD.

0 Otherwise.

1 A transaction on MS bus is ended.

SIF The register bit indicates the status of serial interface. If an interrupt is active on MS bus, the register bit will be active. Note the difference between the signal RDY and SIF. When parallel mode is enabled, the signal SIF will be active whenever any of the signal CED, ERR, BREQ and CMDNK is active. **In order to separate interrupts caused by the signals RDY and SIF, the register bit SIF will not become active until the register MSDC_INT is read once. That is, the sequence for detecting the register bit SIF by polling is as follows:**

1. Detect the register bit RDY of the register MSC_STA
2. Read the register MSDC_INT
3. Detect the register bit SIF of the register MSC_STA

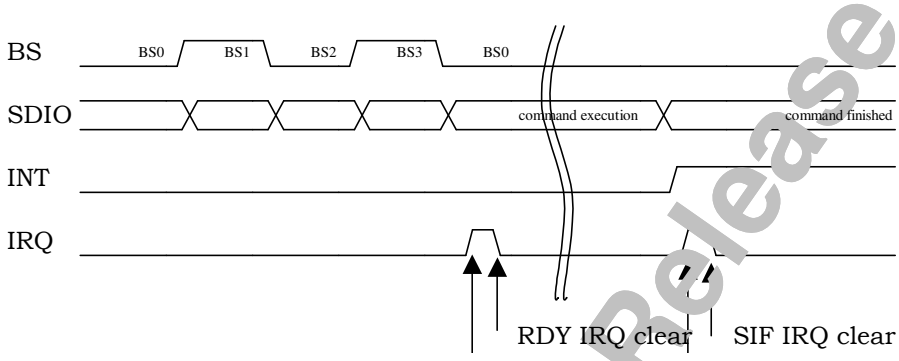

0 Otherwise.

1 An interrupt is active on MS bus

TOER The register bit indicates if a BUSY signal timeout error takes place. When timeout error occurs, the signal BS will become logic low '0'. The register bit will be cleared when writing to the command register MSC_CMD.

0 No timeout error.

1 A BUSY signal timeout error takes place. The register bit RDY will also be active.

CRCER The register bit indicates if a CRC error occurs while receiving read data. The register bit will be cleared when writing to the command register MSC_CMD.

0 Otherwise.

1 A CRC error occurs while receiving read data. The register bit RDY will also be active.

HSRDY The register bit indicates the status of handshaking on MS bus. The register bit will be cleared when writing to the command register MSC_CMD.

0 Otherwise.

1 A Memory Stick card responds to a TPC by RDY.

CED The register bit is only valid when parallel mode is enabled. In fact, it's value is from DAT[0] when serial interface interrupt takes place. See Format Specification version 2.0 of Memory Stick Standard (Memory Stick PRO) for more details.

0 Command does not terminate.

1 Command terminates normally or abnormally.

ERR The register bit is only valid when parallel mode is enabled. In fact, it's value is from DAT[1] when serial interface interrupt takes place. See Format Specification version 2.0 of Memory Stick Standard (Memory Stick PRO) for more details.

0 Otherwise.

1 Indicate memory access error during memory access command.

MTK Confidential Release for Konka

BREQ The register bit is only valid when parallel mode is enabled. In fact, it's value is from DAT[2] when serial interface interrupt takes place. See Format Specification version 2.0 of Memory Stick Standard (Memory Stick PRO) for more details.

- **0** Otherwise.
- **1** Indicate request for data.

CMDNK The register bit is only valid when parallel mode is enabled. In fact, it's value is from DAT[3] when serial interface interrupt takes place. See Format Specification version 2.0 of Memory Stick Standard (Memory Stick PRO) for more details.

- **0** Otherwise
- **1** Indicate non-recognized command.

6.4.4 Application Notes

6.4.4.1 Initialization Procedures After Power On

```
Disable power down control for MSDC module
```

Remember to power on MSDC module before starting any operation to it.

6.4.4.2 Card Detection Procedures

The pseudo code is as follows:

```
MSDC_CFG.PRCFG0 = 2'b10
MSDC_PS = 2'b11
MSDC_CFG.VDDPD = 1
if(MSDC_PS.PINCHG) { // card is inserted
     . . .
}
```

The pseudo code segment perform the following tasks:

1. First pull up CD/DAT3 (INS) pin.
2. Enable card detection and input pin at the same time.
3. Turn on power for memory card.
4. Detect insertion of memory card.

6.4.4.3 Notes on Commands

For MS, check if MSC_STA.RDY is '1' before issuing any command.

For SD/MMC, if the command desired to be issued involves data line, for example, commands with data transfer or R1b response, check if SDC_STA.SDCBUSY is '0' before issuing. If the command desired to be issued does not involve data line, only check if SDC_STA.CMDBUSY is '0' before issuing.

6.4.4.4 Notes on Data Transfer

- For SD/MMC, if multiple-block-write command is issued then only issue STOP_TRANS command inter-blocks instead of intra-blocks.
- Once SW decides to issue STOP_TRANS commands, no more data transfer from or to the controller.

MTK Confidential Release for Konka

6.4.4.5 Notes on Frequency Change

Before changing the frequency of serial clock on MS/SD/MMC bus, it is necessary to disable serial interface of the controller. That is, set the register bit SIEN of the register SDC_CFG to '0' for SD/MMC controller, and set the register bit SIEN of the register MSC_CFG to '0' for Memory Stick controller. Serial interface of the controller needs to be enabled again before starting any operation to the memory card.

6.4.4.6 Notes on Response Timeout

If a read command doest not receive response, that is, it terminates with a timeout, then register SDC_DATSTA needs to be cleared by reading it. The register bit "DATTO" should be active. However, it may take a while before the register bit becomes active. The alternative is to send the STOP_TRANS command. However, this method will receive response with illegal-command information. Also, remember to check if the register bit SDC_STA.CMDBUSY is active before issuing the STOP_TRANS command. The procedure is as follows:

1. Read command => response time out
2. Issue STOP_TRANS command => Get Response
3. Read register SDC_DATSTA to clear it

6.4.4.7 Source or Destination Address is not word-aligned

It is possible that the source address is not word-aligned when data move from memory to MSDC. Similarly, destination address may be not word-aligned when data move from MSDC to memory. This can be solved by setting DMA byte-to-word functionality.

1. DMAn_CON.SIZE=0
2. DMAn_CON.BTW=1
3. DMAn_CON.BURST=2 (or 4)
4. DMAn_COUNT=byte number instead of word number
5. fifo threshold setting must be 1 (or 2), depending on DMAn_CON.BURST

Note n=4 ~ 11

6.4.4.8 Miscellaneous notes

- Siemens MMC card: When a write command is issued and followed by a STOP_TRANS command, Siemens MMC card will de-assert busy status even though flash programming has not yet finished. Software must use "Get Status" command to make sure that flash programming finishes.

6.5 Graphic Memory Controller

6.5.1 General Description

Graphic memory controller provides channels to allow graphic engines to access SYSRAM and External Memory. Simple Request-Acknowledgement handshaking scheme is employed here to ease the complexity of memory access control circuitry in each graphic engine.

MTK Confidential Release for Konka

To maximize data bandwidth, five individual access ports are implemented, which can access different memory banks simultaneously. **Figure 14** shows the connection between GMC, AHB, and memories. One access port is connected to the SYSRAM, and the other access port for external memory access is connected to data cache directly.

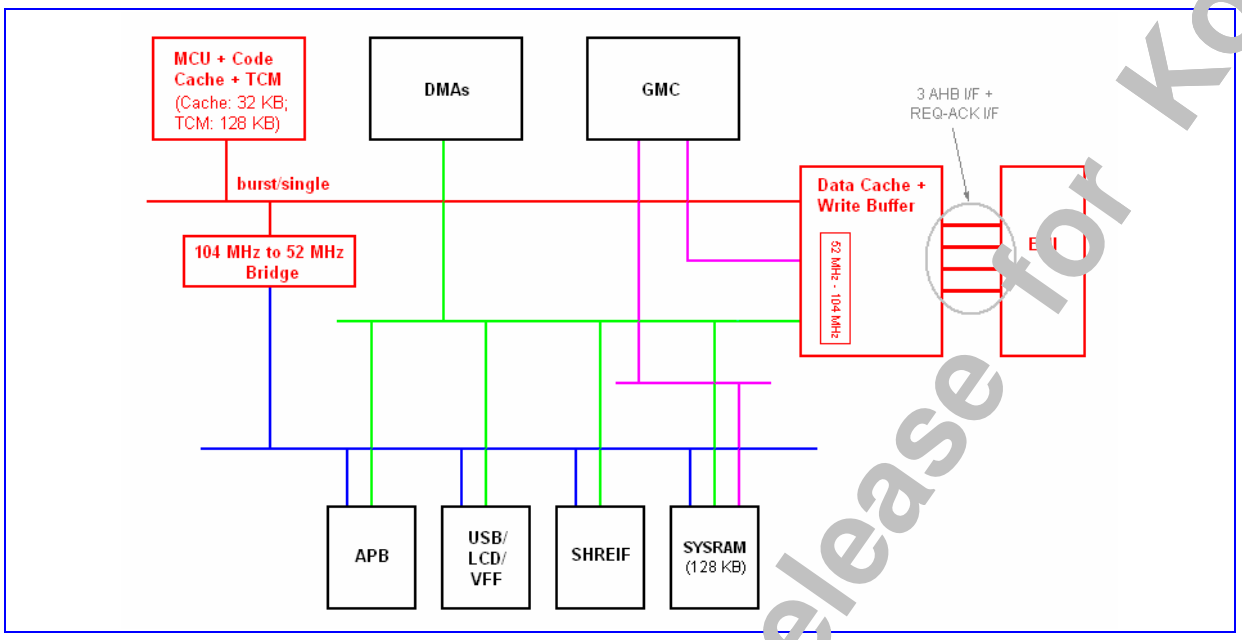

Figure 14 Graphic memory controller

6.5.2 Register Definitions

Register Address	Register Function	Acronym
GMC + 0000h	GMC Control Register	**GMC_CON**
GMC + 0004h	GMC Match Address Register	**GMC_MATCHADDR**
GMC + 0008h	GMC Mask Address Register	**GMC_MASKADDR**
GMC + 000Ch	GMC INRANGE Master Register	**GMC_INRANGE_MAST**
GMC + 0010h	GMC Bandwidth Limiter Register	**GMC_LIMITER**

Table 44 GMC Registers

GMC+0000h GMC Control Register GMC_CON

Bit	31	30	29	28	27	26	25	24	23	22	21	20	19	18	17	16
Name																
Type																
Reset																
Bit	15	14	13	12	11	10	9	8	7	6	5	4	3	2	1	0
Name	TRAP CLR													BURST	TRAP INV	TRAP EN
Type	W													R/W	R/W	R/W
Reset	0													1	0	0

This register is used to control the functionality for GMC.

TRAP EN To enable address-trapping function. When this function is turned on, GMC compares the address between the address configured in GMC Match Address Register and the address issued to memory.

MTK Confidential Release for Konka

When the address is matched, the engine number that issued the request is recorded. The record can be read from GMC INRANGE Master Register

Table 6 shows the engine number of each engine.

Engine Number	Engine Name	Engine Number	Engine Name
0	MP4/JPEG	**10**	CAM (high priority)
1	MP4/JPEG	**11**	TVE (high priority)
2	MP4/JPEG	**12**	MP4_MV (high priority)
3	MP4/JPEG	**13**	2D WRITE
4	MP4/JPEG	**14**	2D COMMAND QUEUE
5	RESIZER	**15**	2D READ
6	RESIZER	**16**	GIF
7	RESIZER	**17**	PNG
8	IMAGE DMA	**18**	IPP
9	IMAGE DMA		

Table 45 Engine number

TRAP INV Enable trapping range inversion. If this register bit is set, the engine, which issues the address out of the address range specified with GMC_MATCHADDR, and GMC_MASKADDR, is trapped. The register bit in GMC_INRANGE_MAST is set accordingly.

BURST Enable burst mode. If burst mode is enabled, arbiter does not change the grant until finishing the burst. On the other hand, GMC treats every request as a SINGLE transfer.

TRAP CLR This register field is used to clear the record in GMC INRANGE Master Register. This register field is a write only register field.

GMC+0004h GMC Match Address Register

GMC_MATCHADDR

Bit	31	30	29	28	27	26	25	24	23	22	21	20	19	18	17	16
Name	ADDR															
Type	R/W															
Bit	15	14	13	12	11	10	9	8	7	6	5	4	3	2	1	0
Name	ADDR															
Type	R/W															

This register is used to specify the trapping address for the address-trapping function.

ADDR The trapping address.

GMC+0008h GMC Mask Address Register

GMC_MASKADDR

Bit	31	30	29	28	27	26	25	24	23	22	21	20	19	18	17	16
Name	MASK															
Type	R/W															
Bit	15	14	13	12	11	10	9	8	7	6	5	4	3	2	1	0
Name	MASK															
Type	R/W															

This register is used to specify the address mask the address-trapping function. The address comparator ignores the address bits that is set as “1” in the GMC Mask Address Register.

MASK address mask.

MTK Confidential Release for Konka

GMC+000Ch GMC INRANGE Master Register — GMC_INRANGE_MAST

Bit	31	30	29	28	27	26	25	24	23	22	21	20	19	18	17	16
Name														ENG 18	ENG 17	ENG 16
Type														RO	RO	RO
Bit	15	14	13	12	11	10	9	8	7	6	5	4	3	2	1	0
Name	ENG 15	ENG 14	ENG 13	ENG 12	ENG 11	ENG 10	ENG 9	ENG 8	ENG 7	ENG 6	ENG 5	ENG 4	ENG 3	ENG 2	ENG 1	ENG 0
Type	RO	RO	RO	RO	RO	RO	RO	RO	RO	RO	RO	RO	RO	RO	RO	RO

This register is used to show the trapped engine..

ENGn The trapped address is issued by corresponding engine.

GMC+0010h GMC Bandwidth Limiter Register — GMC_LIMITER

Bit	31	30	29	28	27	26	25	24	23	22	21	20	19	18	17	16
Name																
Type																
Reset																
Bit	15	14	13	12	11	10	9	8	7	6	5	4	3	2	1	0
Name							LIMITER									
Type							R/W									
Reset							0									

This register is used for slow-down function of GMC EMI interface.

LIMITER This register field is used to specify the period that GMC EMI interface can issue a bus request to AHB. LIMITER represents an AHB request can only be issued in **LIMITER X 4 clock cycles**. The value of LIMITER is from 0 to 1023.

6.6 2D acceleration

6.6.1 2D Engine

6.6.1.1 General Description

To enhance MMI display and gaming experiences, a 2D acceleration engine is implemented. It supports ARGB8888, RGB888, ARGB4444, RGB565 and 8-bpp color modes. Main features are listed as follows:

- Rectangle fill with color gradient.
- Bitblt: multi-Bitblt without transform, 7 rotate, mirror (transparent) Bitblt
- Alpha blending
- Binary ROP
- Line drawing: normal line, dotted line, anti-alias line
- Font caching: normal font, italic font
- Circle drawing
- Quadratic Bezier curve drawing
- Triangle drawing

MTK Confidential Release for Konka

MCU can program 2D engine registers via APB. However, MCU has to make sure that the 2D engine is not BUSY before any write to 2D engine registers occurs. An interrupt scheme is also provided for more flexibility.

A command parser is implemented for further offloading of MCU. The command queue can be randomly assigned in the system memory, with a maximum depth of 2047 commands. If the command queue is enabled, MCU has to check if the command queue has free space before writing to the command queue. Command queue parser will consume command queue entries upon 2D engine requests. **Figure 15** shows the command queue and 2D engine block diagram. Please refer to the graphic command queue functional specification for more details.

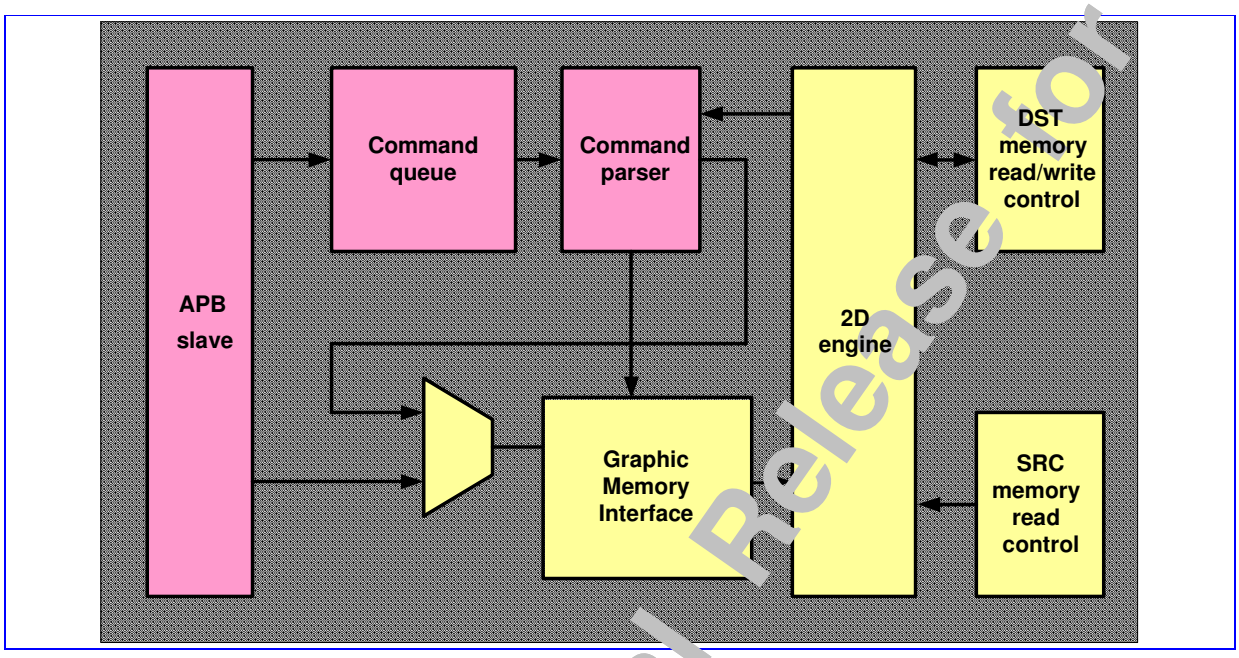

Figure 15 The command queue and 2D engine block diagram.

6.6.1.2 Features Introduction

6.6.1.2.1 2D Coordinate

The coordinates in the 2D engine are represented as 12-bit signed integers. The negative part is clipped during rendering. The maximum resolution can achieve 2047x2047 pixels. The programmed base address is mapped to the origin of the picture, which is illustrated in **Figure 16**.

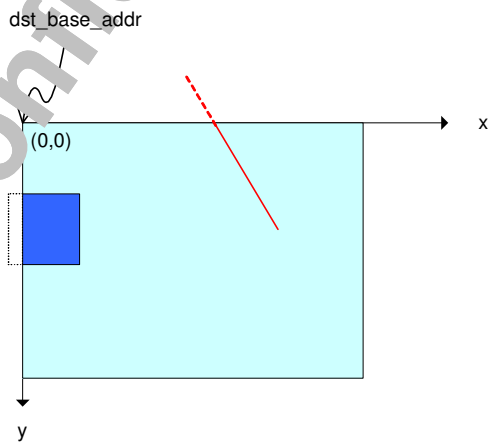

Figure 16 The coordinate of the 2D engine.

MTK Confidential Release for Konka

6.6.1.2.2 Color format

The 2D engine support the color format of 8bpp, RGB565, RGB888, ARGB4444, and ARGB 8888. The color formats of source and destination can be specified separately. Note that when using the 8bpp format, the source and destination color formats have to be the same, since table-lookup of color palette is not provided in 2D engine. Graphic modes of Bitblt, Bitblt with alpha blending, and Bitblt with binary ROP require color format setting for both source and destination. For other graphic modes, only destination color format needs to be specified. The possible settings are listed as **Table 46Table 47**.

Bitblt (Copy, ROP)	
Source color format	**Destination color format**
8bpp	8bpp
RGB565	RGB565
	RGB888
RGB888	RGB565
	RGB888
ARGB4444	ARGB4444
	ARGB8888
ARGB8888	ARGB4444
	ARGB8888

Table 46 source and destination color format setting for Bitblt.

Bitblt with Alpha Blending	
Source color format	**Destination color format**
8bpp	8bpp
RGB565	RGB565
	RGB888
RGB888	RGB565
	RGB888
ARGB4444	RGB565
	RGB888
ARGB8888	RGB565
	RGB888

Table 47 source and destination color format setting for alpha blending.

When source image is used, the source key function could be enabled or disabled. When enabled, the source color key is in the same format of source color. Be aware that the source key is still effective for alpha blending mode.

6.6.1.2.3 Clipping Window

The setting for clipping window is effective for all the 2D graphics. A pair of minimum and maximum boundary is applied on destination side. The portion outside the clipping window will not be drawn to the destination, but the pixels on the boundary will be kept. The clipping operation is illustrated in **Figure 17**.

MTK Confidential Release for Konka

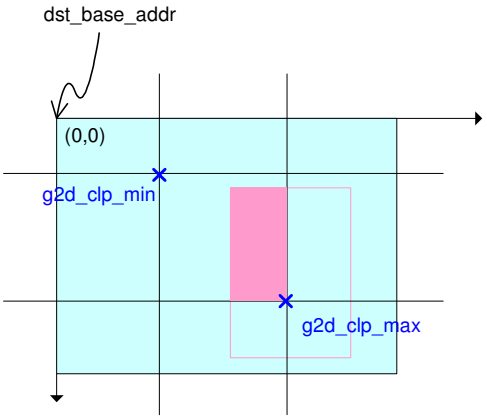

Figure 17 The clipping operation of the 2D engine.

6.6.1.2.4 Bitblt operation

The Bitblt function copies the pixels from source picture to destination. To be more flexible, 4 copy directions and 7 kinds of rotations are provided when doing Bitblt operation. **Figure 18** illustrates the Bitblt operation and required settings.

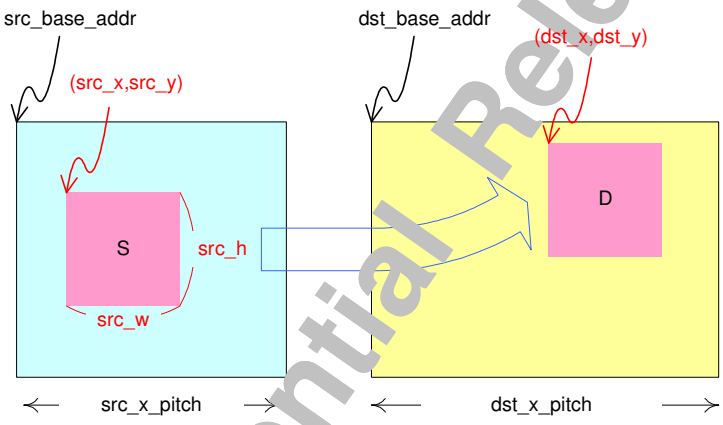

Figure 18 The clipping operation of the 2D engine.

Note that the size of source and destination blocks can be different. If the source block is larger than destination block, the size of destination block is used instead of the source size. When source block size is smaller than destination block size, the pattern of source block is repeated horizontally and vertically in the destination block, which is illustrated as **Figure 19** below.

MTK Confidential Release for Konka

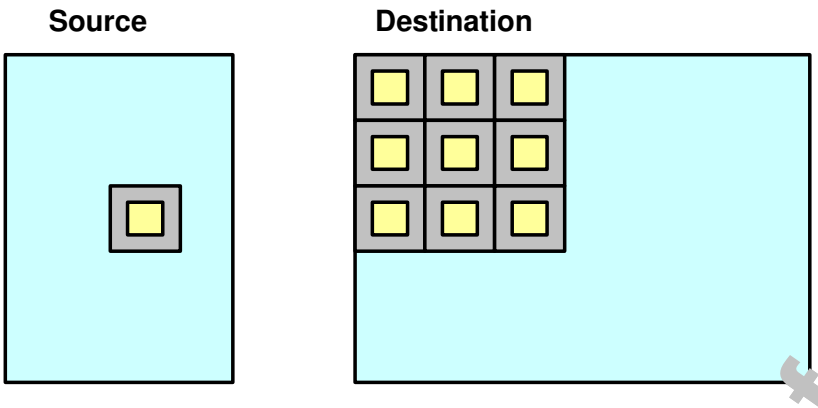

Figure 19 The Bitblt operation when destination size > source size.

6.6.1.2.4.1 Copy direction

When the source block and destination blocks are on the same picture, they may be overlapped by each other. To prevent error from occurring, 4 directions for Bitblt can be programmed. However, the copy direction shall not be enabled when doing rotation, or it will produce unwanted results. The 4 kinds of copy direction are shown in **Figure 20**.

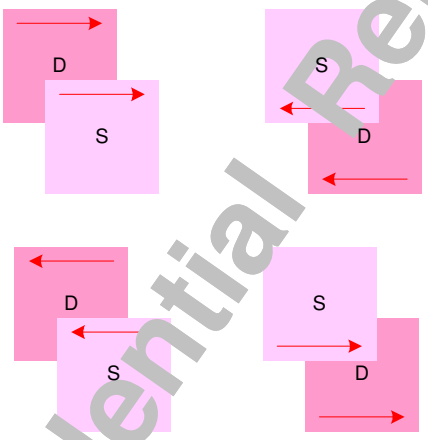

Figure 20 The 4 directions of Bitblt operation.

6.6.1.2.4.2 Rotation

To facilitate Bitblt operation, 7 kinds of rotation can be set at the same time. The rotation operation is illustrated as **Figure 21**. Here the rotation is done on the destination side, while the read sequence of pixels in source block is fixed.

MTK Confidential Release for Konka

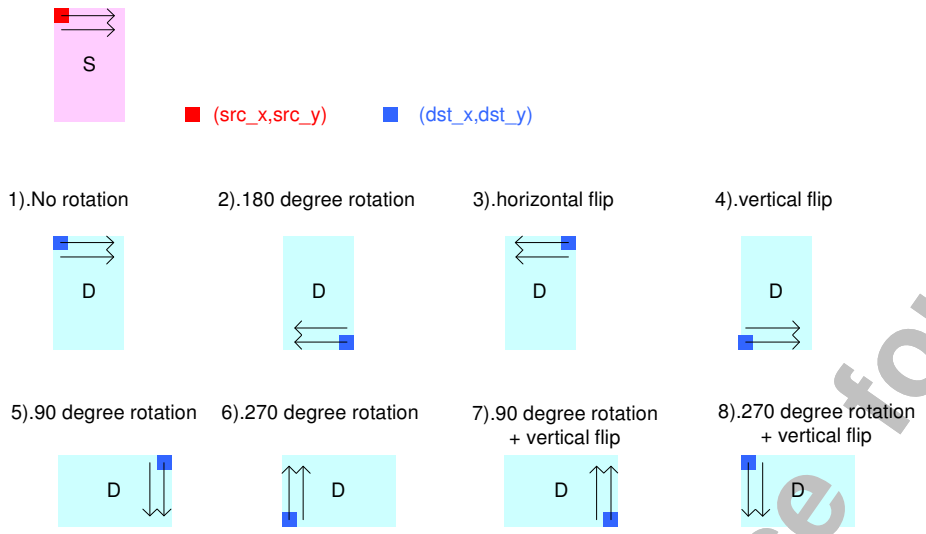

Figure 21 The rotations of Bitblt operation.

6.6.1.2.5 Bitblt with Alpha Blending

Similar to simple Bitblt operation, alpha blending function is provided as well. The pixels in source block are blended onto destination block. Blending is performed according the formula listed below:

$$C = (alpha * Cs + (255 - alpha) * Cd)/255,$$

where Cs is the source color, Cd is the destination color, and alpha is an unsigned integer range from 0 to 255.

The alpha value programmed into the 2D control registers is called constant alpha. When no alpha channel exists, the constant alpha is used to calculate blended color. If the alpha channel exists (in ARGB color mode), the per-pixel alpha is used for blending operation instead of constant alpha.

In addition, the setting of copy directions and rotations are also effective for alpha blending mode. Also, the size and color format of source block can be different from destination.

6.6.1.2.6 Bitblt with Binary ROP

The ROP (Raster Operation) is another block-wise functional mode. Here the 2D engine provides a set of binary ROPs. The ROP code has 16 different combinations, which is listed in the definition of 2D control registers --- G2D_SMODE_CON. Please see sec.1.1.1.3 for detail descriptions.

Similar with other block-wise functions, the copy directions and rotations are also applicable in ROP mode. The size and color format of source and destination do not need to be the same.

6.6.1.2.7 Rectangle Fill with Color Gradient

Rectangle fill mode provides the configurations for color gradient for both x-direction and y-direction. Each of the color gradient of component A, R, G, B is represented by 9.16 signed fixed point number. In order to prevent color crossing the boundary of 0 and 255, it is clipped to 0 and 255 when performing gradient fill. When the color gradient is disabled, the rectangle is filled by one color. An example of gradient fill is shown in **Figure 22**.

MTK Confidential Release for Konka

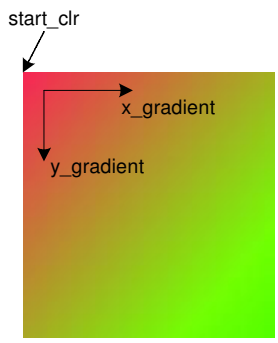

Figure 22 Rectangle gradient fill.

6.6.1.2.8 Line Draw

The line drawing function is implemented with the mid-point algorithm. Given the two endpoints of a line, the points on the line are calculated recursively. The line anti-aliasing is also supported but it requires extra register configurations. In addition, dotted line is also provided for use. Simultaneously turning on anti-aliasing and dotted-line is not recommended since the line may result in a strange look.

6.6.1.2.9 Circle Draw

The circle drawing is quite similar with line drawing, using the mid-point algorithm as well. A center point and a radius have to be programmed into 2D control registers. There are 4 enable bits for each quadrant of a circle, each determines whether the arcs shall be rendered or not. The setting of circle drawing is illustrated in **Figure 23**.

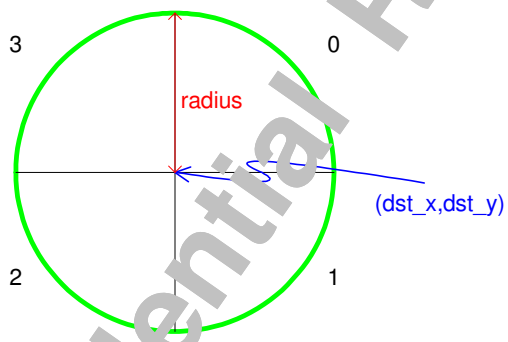

Figure 23 Circle drawing.

6.6.1.2.10 Bezier curve

The quadratic Bezier curve is implemented, too. The quadratic Bezier curve is defined by three control points, as illustrated in **Figure 24**. The Bezier curve drawing is implemented with subdivision method. The amount of subdivisions is programmed by software. The curve gets more detailed with the increase of subdivision factor, but it requires more memory and computing time. To be more precise, doing n times of subdivision needs a buffer of $2^{(n+1)} * 4$ bytes.

MTK Confidential Release for Konka

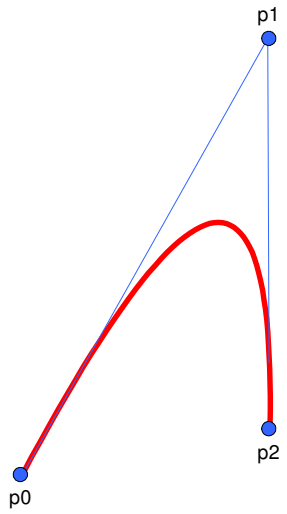

Figure 24 Bezier curve.

6.6.1.2.11 Triangle Flat Fill

The 2D engine supports the function of triangle flat fill with the help of software. First, the software divides the triangle into upper plane and lower plane and passes them to hardware individually. Given the starting vertex's coordinate and the slopes of left and right edges, the 2D hardware fills the horizontal segments between the two edges until the horizontal end is reached. The slope of each edge is in 12.16 bit signed fix-point representation. The programming of triangle drawing is illustrated in **Figure 25**.

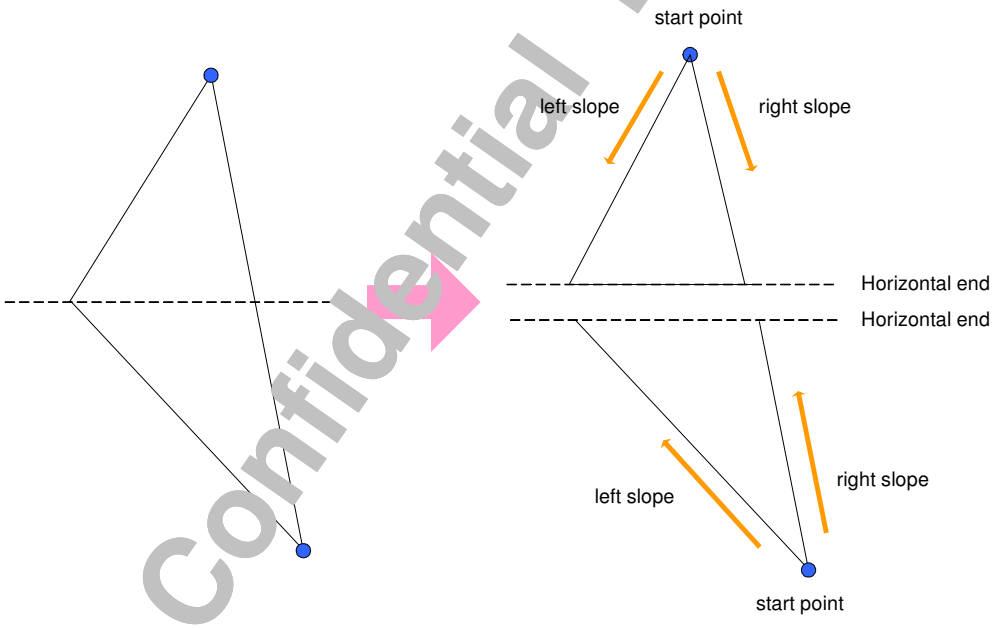

Figure 25 Triangle drawing.

6.6.1.2.12 Font Drawing

The 2D engine helps to render fonts stored in one-bit-per-pixel format. It expends the zero bits to background color and expands one bits to foreground color. The background color can be set as transparent. The font drawing can be programmed as tilt, when given each line's tilt value.

MTK Confidential Release for Konka

The start bit of font drawing can be non-byte aligned to save memory usage for font caching. In addition, the rotations can be performed at the same time when drawing fonts.

6.6.1.3 Register Definitions

Table 48 The 2D engine register mapping. summarizes the 2D engine register mapping on APB and through command queue. The base address of 2D engine is 80670000h.

APB Address	CMQ mapped Address	Register Function	Acronym
G2D+0100h	100h	2D engine fire mode control register	FMODE_CON
	102h	Reserved	
G2D+0104h	104h	2D Engine sub-mode control lower register	SMODE_CON_L
	106h	2D Engine sub-mode control higher register	SMODE_CON_H
G2D+0108h	108h	2D engine common control register	COM_CON
	10Ah	Reserved	
G2D+0110h	110h	2D engine status register	STA
	112h	Reserved	
G2D+0200h	200h	Source base address lower hword register	SRC_BASE_L
	202h	Source base address higher hword register	SRC_BASE_H
G2D+0204h	204h	Source pitch register	SRC_PITCH
	206h	Reserved	
G2D+0208h	208h	Source y coordinate register	SRC_Y
	20Ah	Source x coordinate register	SRC_X
G2D+020Ch	20Ch	Source height register	SRC_H
	20Eh	Source width register	SRC_W
G2D+0210h	210h	Source color key lower hword register	SRC_KEY_L
	212h	Source color key lower hword register	SRC_KEY_H
G2D+0300h	300h	Destination base address lower hword register	DST_BASE_L
	302h	Destination base address higher hword register	DST_BASE_H
G2D+0304h	304h	Destination Pitch Register	DST_PITCH
	306h	Reserved	
G2D+0308h	308h	Destination y coordinate register 0	DST_Y0
	30Ah	Destination x coordinate register 0	DST_X0
G2D+030Ch	30Ch	Destination y coordinate register 1	DST_Y1
	30Eh	Destination x coordinate register 1	DST_X1
G2D+0310h	310h	Destination y coordinate register 2	DST_Y2
	312h	Destination x coordinate register 2	DST_X2
G2D+0318h	318h	Destination height register	DST_H
	31Ah	Destination width register	DST_W
G2D+400h	400h	Foreground color lower hword register	FGCLR_L
	402h	Foreground color lower hword register	FGCLR_H
G2D+404h	404h	Background color lower hword register	BGCLR_L
	406h	Background color lower hword register	BGCLR_H

MTK Confidential Release for Konka

G2D+408h	408h	Clipping minimum y coordinate register	CLP_MIN_Y
	40Ah	Clipping minimum x coordinate register	CLP_MIN_X
G2D+40Ch	40Ch	Clipping maximum y coordinate register	CLP_MAX_Y
	40Eh	Clipping maximum x coordinate register	CLP_MAX_X
G2D+410h	410h	Rectangle color gradient x lower hword register	REC_CLRGD_X_L
	412h	Rectangle color gradient x higher hword register	REC_CLRGD_X_H
G2D+414h	414h	Rectangle color gradient y lower hword register	REC_CLRGD_Y_L
	416h	Rectangle color gradient y higher hword register	REC_CLRGD_Y_H
G2D+0700h ~ G2D+071Fh	700h ~ 71Fh		TILT_0300 ~ TILT_1F1C

Table 48 The 2D engine register mapping.

There are several function modes in 2D graphics engine. Some registers are shared between different them. **Table 49** summarizes the settings under different function modes.

APB Address	CMQ Address	Rectangle fill	Bitblt Operations	Line/Circle drawing	Bezier curve drawing	Triangle drawing	Font caching
G2D+0200h	200h		SRC_BASE			SLOPE_L	SRC_BASE
G2D+0204h	204h		SRC_PITCH				
G2D+0208h	208h		SRC_XY				
G2D+020Ch	20Ch		SRC_SIZE				
G2D+0210h	210h		SRC_KEY				SRC_KEY
G2D+0300h	300h	DST_BASE	DST_BASE	DST_BASE	DST_BASE	DST_BASE	DST_BASE
G2D+0304h	304h	DST_PITCH	DST_PITCH	DST_PITCH	DST_PITCH	DST_PITCH	DST_PITCH
G2D+0308h	308h	DST_XY	DST_XY	DST_XY0	DST_XY0	DST_XY_START	DST_XY
G2D+030Ch	30Ch			DST_XY1/ RADIUS	DST_XY1	DST_Y_END	
G2D+0310h	310h				DST_XY2		
G2D+0318h	318h	DST_SIZE	DST_SIZE				DST_SIZE
G2D+0400h	400h	START_CLR		FGCLR	FGCLR	FGCLR	FGCLR
G2D+0404h	404h		DST_KEY	XY_SQRT			BGCLR
G2D+0408h	408h	CLP_MIN	CLP_MIN	CLP_MIN	CLP_MIN	CLP_MIN	CLP_MIN
G2D+040Ch	40Ch	CLP_MAX	CLP_MAX	CLP_MAX	CLP_MAX	CLP_MAX	CLP_MAX
G2D+0410h	410h	ALPGD_X			BUF_STA_ADD	SLOPE_R	
G2D+0414h	414h	RED_GD_X			SUBDIV_TIME		
G2D+0418h	418h	GREEN_GD_X					
G2D+041Ch	41Ch	BLUE_GD_X					
G2D+0420h	420h	ALPGD_Y					
G2D+0424h	424h	RED_GD_Y					
G2D+0428h	428h	GREEN_GD_Y					
G2D+042Ch	42Ch	BLUE_GD_Y					
G2D+0700h ~ G2D+071Fh	700h ~ 71Fh	TILT_0300 ~ TILT_1F1C	TILT_0300 ~ TILT_1F1C				TILT_0300 ~ TILT_1F1C

MTK Confidential Release for Konka

APB Address	CMQ Address	Horizontal Line Gradient	Horizontal Line Copy with Mask				
G2D+0200h	200h		SRC_BASE				
G2D+0204h	204h						
G2D+0208h	208h						
G2D+020Ch	20Ch		SRC_SIZE				
G2D+0210h	210h						
G2D+0300h	300h	DST_BASE	DST_BASE				
G2D+0304h	304h						
G2D+0308h	308h						
G2D+030Ch	30Ch						
G2D+0310h	310h						
G2D+0318h	318h	DST_SIZE	DST_SIZE				
G2D+0400h	400h	START_CLR					
G2D+0404h	404h						
G2D+0408h	408h						
G2D+040Ch	40Ch						
G2D+0410h	410h	ALPGD_X	MASK_BASE				
G2D+0414h	414h	RED_GD_X					
G2D+0418h	418h	GREEN_GD_X					
G2D+041Ch	41Ch	BLUE_GD_X					
G2D+0420h	420h						
G2D+0424h	424h						
G2D+0428h	428h						
G2D+042Ch	42Ch						
G2D+0700h ~ G2D+071Fh	700h ~ 71Fh						

Table 49 2D engine common registers

Below shows common control registers.

G2D+0100h Graphic 2D Engine Fire Mode Control Register G2D_FMODE_CON

Bit	15	14	13	12	11	10	9	8	7	6	5	4	3	2	1	0
Name					SRC_CLR_MODE				DST_CLR_MODE				G2D_ENG_MODE			
Type					R/W				R/W				R/W			
Reset					000				000				0000			

Write this register will fire the 2D engine according to the CLR_MODE and ENG_MODE field.

SRC_CLR_MODE source color mode

- **000** 8-bpp, LUT disabled
- **001** 16-bpp, RGB 565 format
- **010** 32-bpp, ARGB 8888 format

MTK Confidential Release for Konka

011 24-bpp, RGB 888 format
101 16-bpp, ARGB 4444 format
others reserved

DST_CLR_MODE destination color mode
000 8-bpp, LUT disabled
001 16-bpp, RGB 565 format
010 32-bpp, ARGB 8888 format
011 24-bpp, RGB 888 format
101 16-bpp, ARGB 4444 format
others reserved

G2D_ENG_MODE 2D engine function mode
0000 Line draw.
0001 Circle draw.
0010 Bezier curve draw.
0011 Triangle fill.
1000 Rectangle fill.
1001 Bitblt.
1010 Bitblt with alpha blending.
1011 Bitblt with ROP.
1100 Font drawing.
1101 Horizontal line fill with color gradient. In this mode, the source key and the clipping functions are disabled automatically.
1110 Horizontal line copy with mask. In this mode, the source key and the clipping functions are disabled automatically.
others not allowed

G2D+0104h Graphic 2D Engine Sub-mode Control Register G2D_SMODE_CON

Bit	31	30	29	28	27	26	25	24	23	22	21	20	19	18	17	16
Name	FITA	FNBG	FMSB_FIRST						ALPHA				ROP_CODE			
Type	R/W	R/W	R/W						R/W				R/W			
Reset	0	0	0						0000				0000			
Bit	15	14	13	12	11	10	9	8	7	6	5	4	3	2	1	0
Name					LDOT			LAA_EN	DST_KEY_EN	CLRGD_EN	BDIR		BITA	BROT		
Type					R/W			R/W	R/W	R/W	R/W		R/W	R/W		
Reset					0			0	0	0	11		0	111		

Write this register to set the 2D engine configuration.

FITA font italic enabled.
FNBG font drawing with no background color
FMSB_FIRST font drawing from most significant bit
ALPHA Bit 7-4 of constant alpha value. ROP_CODE is Bit3-0 of constant alpha value.
ROP_CODE Binary ROP code. Bits 2-0 are also used to specify the start bit position for Font drawing and enabled arcs for circle drawing.

Bitblt ROP Code	Boolean Function	Start Bit Position for Font Drawing	Enabled Arcs

MTK Confidential Release for Konka

0000	0 (Black)	Bit 0	None
0001	~(S + D)	Bit 1	I
0010	~S . D	Bit 2	II
0011	~S	Bit 3	I , II
0100	S . ~D	Bit 4	III
0101	~D	Bit 5	I , III
0110	S ^ D	Bit 6	II , III
0111	~(S . D)	Bit 7	I , II , III
1000	S . D	Bit 0	IV
1001	~(S ^ D)	Bit 1	I , IV
1010	D	Bit 2	II , III
1011	~S + D	Bit 3	I , II , IV
1100	S	Bit 4	III , IV
1101	S + ~D	Bit 5	I , III , IV
1110	S + D	Bit 6	II , III , IV
1111	1 (White)	Bit 7	I , II , III , IV

S = Source, D = Destination.

I = first quadrant, II = second quadrant, III = third quadrant, IV = fourth quadrant.

LDOT line dotted

LAA_EN line anti-aliasing enabled

DST_KEY_EN Destination key enabled for Bitblt functions

CLRGR_EN Color gradient enabled for rectangle fill

BDIR Bitblt direction:

- **00** from lower right corner
- **01** from lower left corner
- **10** from upper right corner
- **11** from upper left corner

This field only takes effect when the Bitblt rotation is set as none (111). When doing rotation the Bitblt direction of source image is always from upper left corner.

BITA Bitblt italic enabled, using the tilt value defined in G2D_TILT_00 ~ G2D_TILT_1F registers. The tilt function should not be enabled in Alpha Blending and ROP mode.

BROT Bitblt rotation:

- **000** mirror then rotate 90
- **001** rotate 90
- **010** rotate 270
- **011** mirror then rotate 270
- **100** rotate 180
- **101** mirror
- **110** mirror then rotate 180
- **111** none

G2D+0108h Graphic 2D Engine Common Control Register

G2D_COM_CON

Bit	31	30	29	28	27	26	25	24	23	22	21	20	19	18	17	16

MTK Confidential Release for Konka

Bit	15	14	13	12	11	10	9	8	7	6	5	4	3	2	1	0
Name														CLP_EN	SRCKEY_EN	RST
Type														R/W	R/W	R/W
Reset														0	0	0

Write this register to set the 2D engine configuration.

RST 2D engine reset, only the state machine is reset, the content of control registers will not be reset.

SRCKEY_EN Source key enabled.

CLP_EN Clipping enabled.

G2D+010Ch Graphic 2D Engine Interrupt Control Register G2D_IRQ_CON

Bit	31	30	29	28	27	26	25	24	23	22	21	20	19	18	17	16
Name																
Type																
Reset																
Bit	15	14	13	12	11	10	9	8	7	6	5	4	3	2	1	0
Name																EN
Type																R/W
Reset																0

Write this register to set the 2D engine IRQ configuration.

EN interrupt enable. The interrupt is negative edge sensitive.

G2D+0110h Graphic 2D Engine Common Status Register G2D_COM_STA

Bit	31	30	29	28	27	26	25	24	23	22	21	20	19	18	17	16
Name																
Type																
Reset																
Bit	15	14	13	12	11	10	9	8	7	6	5	4	3	2	1	0
Name																BUSY
Type																RO
Reset																0

Read this register to get the 2D engine status. 2D engine may function abnormally if any 2D engine register is modified when BUSY.

BUSY 2D engine is busy

G2D+0200h Graphic 2D Source Base Address Register G2D_SRC_BASE

Bit	31	30	29	28	27	26	25	24	23	22	21	20	19	18	17	16
Name	SRC_BASE[31:16]															
Type	R/W															
Reset	0															
Bit	15	14	13	12	11	10	9	8	7	6	5	4	3	2	1	0
Name	SRC_BASE[15:0]															
Type	R/W															
Reset	0															

SRC_BASE The base address of source image. Also, this field is used for the slope of the left triangle edges represented in 12.16 format.

MTK Confidential Release for Konka

G2D+0204h Graphic 2D Engine Source Pitch Register G2D_SRC_PITCH

Bit	15	14	13	12	11	10	9	8	7	6	5	4	3	2	1	0
Name					SRC_PITCH											
Type					R/W											
Reset					0											

SRC_PITCH The width of source image in the unit of pixels.

G2D+0208h Graphic 2D Engine Source X and Y Register G2D_SRC_XY

Bit	31	30	29	28	27	26	25	24	23	22	21	20	19	18	17	16
Name					SRC_X											
Type					R/W											
Reset					0											
Bit	15	14	13	12	11	10	9	8	7	6	5	4	3	2	1	0
Name					SRC_Y											
Type					R/W											
Reset					0											

SRC_Y The starting y co-ordinate of source image. It must be positive although represented as 12-bit signed integer.

SRC_X The starting x co-ordinate of source image. It must be positive although represented as 12-bit signed integer.

G2D+020Ch Graphic 2D Engine Source Size Register G2D_SRC_SIZE

Bit	31	30	29	28	27	26	25	24	23	22	21	20	19	18	17	16
Name					SRC_W											
Type					R/W											
Reset					0											
Bit	15	14	13	12	11	10	9	8	7	6	5	4	3	2	1	0
Name					SRC_H											
Type					R/W											
Reset					0											

SRC_H The source height for Bitblt, alpha blending and ROP. It must be positive although represented as 12-bit signed integer.

SRC_W The source width for Bitblt, alpha blending and ROP. It must be positive although represented as 12-bit signed integer.

G2D+0210h Graphic 2D Engine Source Color Key Register G2D_SRC_KEY

Bit	31	30	29	28	27	26	25	24	23	22	21	20	19	18	17	16
Name	SRC_KEY[31:16]															
Type	R/W															
Reset	0															
Bit	15	14	13	12	11	10	9	8	7	6	5	4	3	2	1	0
Name	SRC_KEY[15:0]															
Type	R/W															
Reset	0															

SRC_KEY The source color key. The color will be transparent if color keying is enabled.

G2D+0300h Graphic 2D Destination Base Address Register G2D_DST_BASE

Bit	31	30	29	28	27	26	25	24	23	22	21	20	19	18	17	16
Name	DST_BASE[31:16]															
Type	R/W															
Reset	0															

MTK Confidential Release for Konka

Bit	15	14	13	12	11	10	9	8	7	6	5	4	3	2	1	0
Name	DST_BASE[15:0]															
Type	R/W															
Reset	0															

DST_BASE The base address of destination image.

G2D+0304h Graphic 2D Engine Destination Pitch Register G2D_DST_PITCH

Bit	15	14	13	12	11	10	9	8	7	6	5	4	3	2	1	0
Name					SRC_PITCH											
Type					R/W											
Reset					0											

DST_PITCH The width of destination image in the unit of pixels.

G2D+0308h Graphic 2D Engine Destination X and Y Register 0 G2D_DST_XY0

Bit	31	30	29	28	27	26	25	24	23	22	21	20	19	18	17	16
Name					DST_X0											
Type					R/W											
Reset					0											
Bit	15	14	13	12	11	10	9	8	7	6	5	4	3	2	1	0
Name					DST_Y0											
Type					R/W											
Reset					0											

(DST_X0 , DST_Y0) is used as the starting co-ordinate in Bitblt, alpha blending, ROP, and font drawing mode. In line mode or triangle fill mode, it is used as one end point. For Bezier curve drawing, it is one of the control points. While in circle drawing mode, it is the center of the circle. Also this filed is used as the starting point of triangle draw.

DST_X0 Represented by 12-bit signed integer. Negative co-ordinate is allowed.
DST_Y0 Represented by 12-bit signed integer. Negative co-ordinate is allowed.

G2D+030Ch Graphic 2D Engine Destination X and Y Register 1 G2D_DST_XY1

Bit	31	30	29	28	27	26	25	24	23	22	21	20	19	18	17	16
Name					DST_X1											
Type					R/W											
Reset					0											
Bit	15	14	13	12	11	10	9	8	7	6	5	4	3	2	1	0
Name					DST_Y1											
Type					R/W											
Reset					0											

(DST_X1 , DST_Y1) is used as one end point in Line drawing and triangle fill mode. For Bezier curve drawing, it is one of the control points. While in circle drawing mode, DST_X1 must be positive since it is the radius of the circle. Also, Bit 15-0 is used as the vertical end of triangle draw.

DST_X1 Represented by 12-bit signed integer. Negative co-ordinate is allowed.
DST_Y1 Represented by 12-bit signed integer. Negative co-ordinate is allowed.

G2D+0310h Graphic 2D Engine Destination X and Y Register 2 G2D_DST_XY2

Bit	31	30	29	28	27	26	25	24	23	22	21	20	19	18	17	16
Name					DST_X2											
Type					R/W											
Reset					0											
Bit	15	14	13	12	11	10	9	8	7	6	5	4	3	2	1	0
Name					DST_Y2											

MTK Confidential Release for Konka

Type					R/W
Reset					0

(DST_X2 , DST_Y2) is used as one end point in triangle fill mode. For Bezier curve drawing, it is one of the control points.

DST_X2 Represented by 12-bit signed integer. Negative co-ordinate is allowed.

DST_Y2 Represented by 12-bit signed integer. Negative co-ordinate is allowed.

G2D+0318h Graphic 2D Engine Destination Size Register G2D_DST_SIZE

Bit	31	30	29	28	27	26	25	24	23	22	21	20	19	18	17	16
Name					DST_W											
Type					R/W											
Reset					0											
Bit	15	14	13	12	11	10	9	8	7	6	5	4	3	2	1	0
Name					DST_H											
Type					R/W											
Reset					0											

SRC_H The source height for Bitblt, alpha blending and ROP. It must be positive although represented as 12-bit signed integer.

SRC_W The source width for Bitblt, alpha blending and ROP. It must be positive although represented as 12-bit signed integer.

G2D+0400h Graphic 2D Engine Foreground Color Register G2D_ FGCLR

Bit	31	30	29	28	27	26	25	24	23	22	21	20	19	18	17	16
Name	FGCLR[31:16]															
Type	R/W															
Reset	0															
Bit	15	14	13	12	11	10	9	8	7	6	5	4	3	2	1	0
Name	FGCLR[15:0]															
Type	R/W															
Reset	0															

FGCLR The foreground color used for line/circle drawing and font drawing. It is also the start color of rectangle fill. The format of foreground color depends on the source color mode set in G2D_FMODE_CON register.

G2D+0404h Graphic 2D Engine Background Color Register G2D_BGCLR

Bit	31	30	29	28	27	26	25	24	23	22	21	20	19	18	17	16
Name	BGCLR[31:16]															
Type	R/W															
Reset	0															
Bit	15	14	13	12	11	10	9	8	7	6	5	4	3	2	1	0
Name	BGCLR[15:0]															
Type	R/W															
Reset	0															

BGCLR The background color of the source. The format of background color depends on the source color mode set in G2D_FMODE_CON register. Bit 15-0 also used as the **XY_SQRT** for anti-aliased line drawing. The XY_SQRT calculation is listed as bellow.

$$XY_SQRT = 2 * \sqrt{(DST_X1 - DST_X0)^2 + (DST_Y1 - DST_Y0)^2}$$

G2D+0408h Graphic 2D Engine Clipping Minimum Register G2D_CLIP_MIN

Bit	31	30	29	28	27	26	25	24	23	22	21	20	19	18	17	16
Name						CLIP_MIN_X										
Type						R/W										

MTK Confidential Release for Konka

Reset						0										
Bit	15	14	13	12	11	10	9	8	7	6	5	4	3	2	1	0
Name						CLIP_MIN_Y										
Type						R/W										
Reset						0										

CLIP_MIN_X The minimum value of x co-ordinate in clipping window, signed 12-bit integer.

CLIP_MIN_Y The minimum value of y co-ordinate in clipping window, signed 12-bit integer..

G2D+040ch Graphic 2D Engine Clipping Maximum Register G2D_CLIP_MAX

Bit	31	30	29	28	27	26	25	24	23	22	21	20	19	18	17	16
Name						CLIP_MAX_X										
Type						R/W										
Reset						11111111111										
Bit	15	14	13	12	11	10	9	8	7	6	5	4	3	2	1	0
Name						CLIP_MAX_Y										
Type						R/W										
Reset						11111111111										

CLIP_MAX_X The maximum value of x co-ordinate in clipping window, signed 12-bit integer...

CLIP_MAX_Y The maximum value of y co-ordinate in clipping window, signed 12-bit integer..

G2D+0410h Graphic 2D X Alpha Gradient Register G2D_ALPGR_X

Bit	31	30	29	28	27	26	25	24	23	22	21	20	19	18	17	16
Name								ALPHA_GR_X[24:16]								
Type								R/W								
Reset								0								
Bit	15	14	13	12	11	10	9	8	7	6	5	4	3	2	1	0
Name	ALPHA_GR_X[15:0]															
Type	R/W															
Reset	0															

The color gradient of alpha in x direction for rectangle gradient fill. Bit 31-0 is also used as the start address of the buffer used for Bezier curve draw. Also, this field is used for the slope of the right triangle edges represented in signed 12.16 format.

ALPHA_GR_X The color gradient of alpha channel, represented in signed 9.16 format.

G2D+0414h Graphic 2D X Red Gradient Register G2D_REDGR_X

Bit	31	30	29	28	27	26	25	24	23	22	21	20	19	18	17	16
Name								RED_GR_X[24:16]								
Type								R/W								
Reset								0								
Bit	15	14	13	12	11	10	9	8	7	6	5	4	3	2	1	0
Name	RED_GR_X[15:0]															
Type	R/W															
Reset	0															

The color gradient of red in x direction for rectangle gradient fill. Bit 3-0 also used as the times of subdivision for Bezier curve drawing.

RED_GR_X The color gradient of red component, represented in signed 9.16 format.

G2D+0418h Graphic 2D X Green Gradient Register G2D_ GREENGR_X

Bit	31	30	29	28	27	26	25	24	23	22	21	20	19	18	17	16
Name								GREEN_GR_X[24:16]								

MTK Confidential Release for Konka

Type								R/W								
Reset								0								
Bit	15	14	13	12	11	10	9	8	7	6	5	4	3	2	1	0
Name	GREEN_GR_X[15:0]															
Type	R/W															
Reset	0															

GREEN_GR_X The color gradient of blue component, represented in signed 9.16 format.

G2D+041Ch Graphic 2D X Blue Gradient Register G2D_BLUEGR_X

Bit	31	30	29	28	27	26	25	24	23	22	21	20	19	18	17	16
Name								BLUE_GR_X[24:16]								
Type								R/W								
Reset								0								
Bit	15	14	13	12	11	10	9	8	7	6	5	4	3	2	1	0
Name	BLUE_GR_X[15:0]															
Type	R/W															
Reset	0															

BLUE_GR_X The color gradient of blue component, represented in signed 9.16 format.

G2D+0420h Graphic 2D Y Alpha Gradient Register G2D_ALPGR_Y

Bit	31	30	29	28	27	26	25	24	23	22	21	20	19	18	17	16
Name								ALPHA_GR_Y[24:16]								
Type								R/W								
Reset								0								
Bit	15	14	13	12	11	10	9	8	7	6	5	4	3	2	1	0
Name	ALPHA_GR_Y[15:0]															
Type	R/W															
Reset	0															

The color gradient of alpha in x direction for rectangle gradient fill.

ALPHA_GR_Y The color gradient of alpha channel, represented in signed 9.16 format.

G2D+0424h Graphic 2D Y Red Gradient Register G2D_REDGR_Y

Bit	31	30	29	28	27	26	25	24	23	22	21	20	19	18	17	16
Name								RED_GR_Y[24:16]								
Type								R/W								
Reset								0								
Bit	15	14	13	12	11	10	9	8	7	6	5	4	3	2	1	0
Name	RED_GR_Y[15:0]															
Type	R/W															
Reset	0															

The color gradient of red in x direction for rectangle gradient fill.

RED_GR_Y The color gradient of red component, represented in signed 9.16 format.

G2D+0428h Graphic 2D Y Green Gradient Register G2D_ GREENGR_Y

Bit	31	30	29	28	27	26	25	24	23	22	21	20	19	18	17	16
Name								GREEN_GR_Y24:16]								
Type								R/W								
Reset								0								
Bit	15	14	13	12	11	10	9	8	7	6	5	4	3	2	1	0
Name	GREEN_GR_Y15:0]															

MTK Confidential Release for Konka

Type	R/W
Reset	0

GREEN_GR_Y The color gradient of blue component, represented in signed 9.16 format.

G2D+042Ch Graphic 2D Y Blue Gradient Register G2D_BLUEGR_Y

Bit	31	30	29	28	27	26	25	24	23	22	21	20	19	18	17	16
Name								BLUE_GR_Y[24:16]								
Type								R/W								
Reset								0								
Bit	15	14	13	12	11	10	9	8	7	6	5	4	3	2	1	0
Name	BLUE_GR_Y[15:0]															
Type	R/W															
Reset	0															

BLUE_GR_Y The color gradient of blue component, represented in signed 9.16 format.

6.6.2 Command Queue

6.6.2.1 General Description

To enhance MMI display and gaming experiences, a command queue parser is implemented for further offloading of MCU. The command queue with a flexible depth setting is allocated in system memory. If the command queue is enabled, software program has to check if the command queue has free space before writing to the command queue data register. Command queue parser consumes the command queue entries upon 2D engine requests. **Figure 15** shows the command queue and 2D engine block diagram.

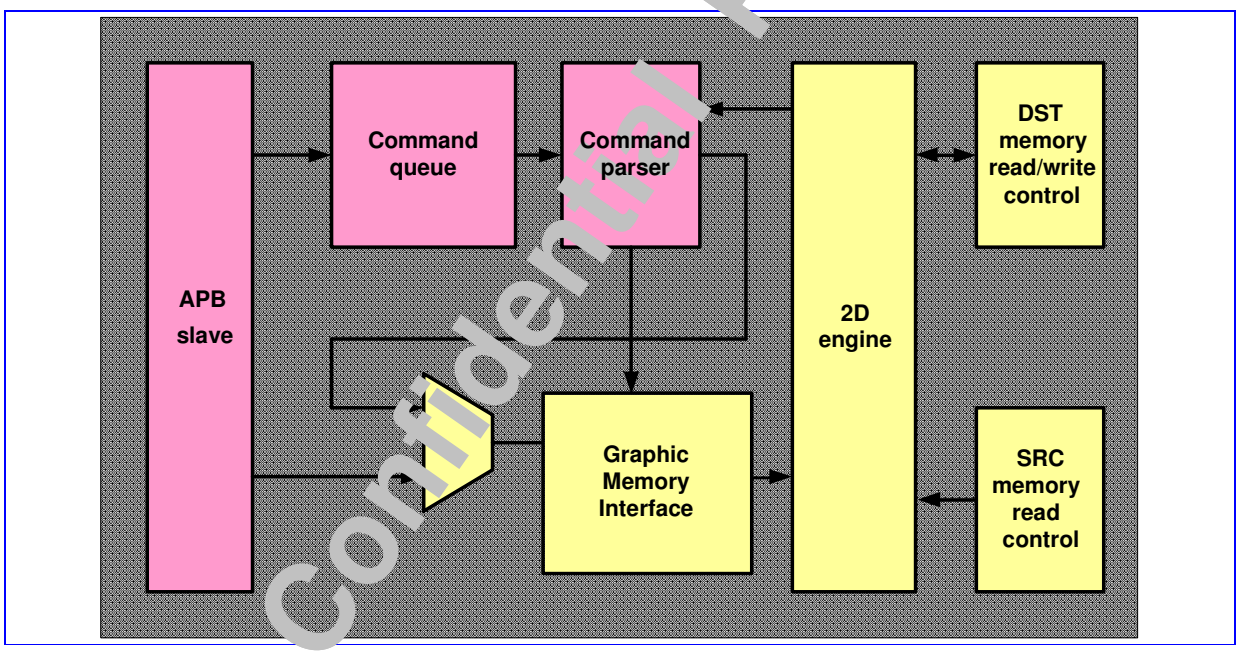

Figure 26 The command queue and 2D engine block diagram.

6.6.2.2 Register Definitions

MCU APB bus registers are listed as follows. The base address of the command queue controller is 80660000h.

MTK Confidential Release for Konka

GCMQ+0000h Graphic Command Queue Control Register GCMQ_CON

Bit	31	30	29	28	27	26	25	24	23	22	21	20	19	18	17	16
Name																
Type																
Reset																
Bit	15	14	13	12	11	10	9	8	7	6	5	4	3	2	1	0
Name															WEN	EN
Type															R/W	R/W
Reset															0	0

EN Command queue enable. When EN is LOW, the command queue controller is reset.

WEN Command queue in write mode. When WEN is LOW, the command queue consumes the commands in the queue if command queue is not empty.

GCMQ+0004h Graphic Command Queue Status Register GCMQ_STA

Bit	31	30	29	28	27	26	25	24	23	22	21	20	19	18	17	16
Name																
Type																
Reset																
Bit	15	14	13	12	11	10	9	8	7	6	5	4	3	2	1	0
Name	WR_RDY					FREE										
Type	RO					RO										
Reset	0					100000000										

FREE Number of free command queue entries.

WR_RDY Ready to receive command, command-write is not allowed when this status bit is 0. Software has to check this bit before writing command to gcmq.

GCMQ+0008h Graphic Command Queue Data Register GCMQ_DAT

Bit	31	30	29	28	27	26	25	24	23	22	21	20	19	18	17	16
Name					ADDR											
Type					WO											
Bit	15	14	13	12	11	10	9	8	7	6	5	4	3	2	1	0
Name	DATA															
Type	WO															

ADDR [11:0] Write address for mapped 2D engine registers.

DATA [15:0] Write data for mapped 2D engine registers.

GCMQ+000Ch Graphic Command Queue Base Address Register GCMQ_BASE_ADD

Bit	31	30	29	28	27	26	25	24	23	22	21	20	19	18	17	16
Name	BASE_ADD[31:16]															
Type	R/W															
Bit	15	14	13	12	11	10	9	8	7	6	5	4	3	2	1	0
Name	BASE_ADD[15:0]															
Type	R/W															

BASE_ADD Starting address of the command queue in memory.

Note : This field can only be modified while the command queue is not enabled; otherwise the behavior of the command queue is unpredictable.

MTK Confidential Release for Konka

GCMQ+0010h Graphic Command Queue Buffer Length Register

GCMQ_LENGTH

Bit	31	30	29	28	27	26	25	24	23	22	21	20	19	18	17	16
Name																
Type																
Bit	15	14	13	12	11	10	9	8	7	6	5	4	3	2	1	0
Name						LENGTH										
Type						R/W										

LENGTH[9:0] Length of the command queue. Occupied space of the command queue in the memory is LENGTH *4Bytes.

Note : This field can only be modified while the command queue is not enabled; otherwise the behavior of the command queue is unpredictable.

GCMQ+0014h Graphic Command Queue Current Register

GCMQ_DMA_ADDR

Bit	31	30	29	28	27	26	25	24	23	22	21	20	19	18	17	16
Name	GCMQ_DMA_ADDR															
Type	RO															
Bit	15	14	13	12	11	10	9	8	7	6	5	4	3	2	1	0
Name	GCMQ_DMA_ADDR															
Type	RO															

GCMQ_DMA_ADDR Current read or write DMA address of GCMQ.

6.6.2.3

6.7 Capture Resize

6.7.1 General Description

This block provides the image resizing function for image and video capturing scenarios. It receives image data from the ISP module, performs the image resizing function and outputs to the IMG_DMA module. **Figure 27** shows the block diagram. The capture resize is composed of horizontal and vertical resizing blocks. It can scale up or down the input image by any ratio. However, the maximum sizes of input and output images are limited to 2048x2048.

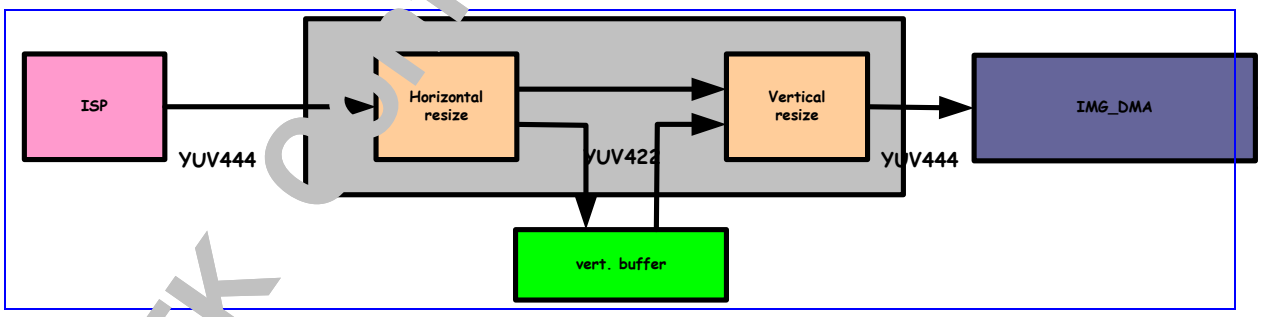

Figure 27 Block diagram of the capture resize

The horizontal resizing function is a combination of 2's power average and bi-linear interpolation. The vertical resizing function is a bi-linear interpolation. The input and output format are both YUV444. But the internal

MTK Confidential Release for Konka

working memory format is YUV422 to mitigate memory and bandwidth requirements. There is one GMC port employed in the capture resize for the vertical buffer read/write.

6.7.2 Register Definitions

REGISTER ADDRESS	REGISTER NAME	SYNONYM
CRZ+ 0000h	Capture Resize Configuration Register	CRZ_CFG
CRZ + 0004h	Capture Resize Control Register	CRZ_CON
CRZ + 0008h	Capture Resize Status Register	CRZ_STA
CRZ + 000Ch	Capture Resize Interrupt Register	CRZ_INT
CRZ + 0010h	Capture Resize Source Image Size Register 1	CRZ_SRCSZ1
CRZ + 0014h	Capture Resize Target Image Size Register 1	CRZ_TARSZ1
CRZ + 0018h	Capture Resize Horizontal Ratio Register 1	CRZ_HRATIO1
CRZ + 001Ch	Capture Resize Vertical Ratio Register 1	CRZ_VRATIO1
CRZ + 0020h	Capture Resize Horizontal Residual Register 1	CRZ_HRES1
CRZ + 0024h	Capture Resize Vertical Residual Register 1	CRZ_VRES1
CRZ + 0040h	Capture Resize Fine Resizing Configuration Register	CRZ_FRCFG
CRZ + 005Ch	Capture Resize Pixel-Based Resizing Working Memory Base Address	CRZ_PRWMBASE
CRZ + 00B0h	Capture Resize Information Register 0	CRZ_INFO0
CRZ + 00B4h	Capture Resize Information Register 1	CRZ_INFO1
CRZ + 00B8h	Capture Resize Information Register 2	CRZ_INFO2
CRZ + 00BCh	Capture Resize Information Register 3	CRZ_INFO3
CRZ + 00C0h	Capture Resize Information Register 4	CRZ_INFO4
CRZ + 00C4h	Capture Resize Information Register 5	CRZ_INFO5

6.7.2.1 Capture Resize Configuration Register

CRZ+0000h Capture Resize Configuration Register CRZ_CFG

Bit	31	30	29	28	27	26	25	24	23	22	21	20	19	18	17	16
Name																
Type																
Reset																
Bit	15	14	13	12	11	10	9	8	7	6	5	4	3	2	1	0
Name									LBSEL		PSEL	PCON	PELSRC1			
Type									R/W		R/W	R/W	R/W			
Reset									0		0	0	0000			

The register is for global configuration of Capture Resize.

PELSRC1 The register field specifies which pixel-based image source is serviced.

- **0** Camera Interface
- **1** MPEG4 Encoder DMA
- **2** MPEG4 Decoder DMA
- **3** IBW4 DMA
- **4** IPP
- **Others** Reserved

MTK Confidential Release for Konka

PCON The register bit specifies if pixel-based resizing continues whenever an image finishes processing. Once continuous run for pixel-based resizing is enabled and pixel-based resizing is running, the only way to stop is to reset Capture Resize. If to stop immediately is desired, reset Capture Resize directly. If the last image is desired, set the register bit to '0' first. Then wait until image resizer is not busy again. Finally reset image resizer.

- **0** Single run
- **1** Continuous run

PSEL The register field determines if block-based image sources is serviced.

- **0** Block-based image source is serviced.
- **1** Block-based image source is NOT serviced completely. Clock for block-based processes is stopped and block-based image input is blocked completely.

LBSEL Line buffer selection.

- **0** Shared memory.
- **1** Dedicated memory.

6.7.2.2 Capture Resize Control Register

CRZ+0004h Capture Resize Control Register CRZ_CON

Bit	31	30	29	28	27	26	25	24	23	22	21	20	19	18	17	16
Name														PELVRRST	PELHRRST	
Type														R/W	R/W	
Reset														0	0	
Bit	15	14	13	12	11	10	9	8	7	6	5	4	3	2	1	
Name														PELVRENA	PELHRENA	
Type														R/W	R/W	
Reset														0	0	

The register is for global control of Capture Resize. **Note that software reset does NOT reset all register settings. Remember to trigger Capture Resize first before triggering image sources to Capture Resize.**

PELHRENA Writing '1' to the register bit causes pixel-based fine horizontal resizing proceed to work. However, if horizontal resizing is not necessary, do not write '1' to the register bit.

PELVRENA Writing '1' to the register bit causes pixel-based fine vertical resizing proceed to work. However, if vertical resizing is not necessary, do not write '1' to the register bit.

PELHRRST Writing '1' to the register causes pixel-based fine horizontal resizing to stop immediately and have pixel-based fine horizontal resizing keep in reset state. In order to have pixel-based fine horizontal resizing go to normal state, write '0' to the register bit.

PELVRRST Writing '1' to the register causes pixel-based fine vertical resizing to stop immediately and have pixel-based fine vertical resizing keep in reset state. In order to have pixel-based fine vertical resizing go to normal state, write '0' to the register bit.

6.7.2.3 Capture Resize Status Register

CRZ+0008h Capture Resize Status Register CRZ_STA

Bit	31	30	29	28	27	26	25	24	23	22	21	20	19	18	17	16
Name																
Type																
Reset																
Bit	15	14	13	12	11	10	9	8	7	6	5	4	3	2	1	0

MTK Confidential Release for Konka

Name														PELVRBUSY	PELHRBUSY	
Type														RO	RO	
Reset														0	0	

The register indicates global status of Capture Resize.

PELHRBUSY Pixel-based HR (Horizontal Resizing) Busy Status

PELVRBUSY Pixel-based VR (Vertical Resizing) Busy Status

6.7.2.4 Capture Resize Interrupt Register

CRZ+000Ch Capture Resize Interrupt Register CRZ_INT

Bit	31	30	29	28	27	26	25	24	23	22	21	20	19	18	17	16
Name																
Type																
Reset																
Bit	15	14	13	12	11	10	9	8	7	6	5	4	3	2	1	0
Name														PELVRINT	PELHRINT	
Type														RC	RC	
Reset														0	0	

The register shows up the interrupt status of resizer.

PELHRINT Interrupt for PELHR (Pixel-based Horizontal Resizing). No matter the register bit CRZ_FRCFG.HRINTEN is enabled or not, the register bit is active whenever PELHR completes. It could be as software interrupt by polling the register bit. Clear it by reading the register.

PELVRINT Interrupt for PELVR (Pixel -based Vertical Resizing). No matter the register bit CRZ_FRCFG.VRINTEN is enabled or not, the register bit is active whenever PELVR completes. It could be as software interrupt by polling the register bit. Clear it by reading the register.

6.7.2.5 Capture Resize Source Image Size Register 1

CRZ+0010h Capture Resize Source Image Size Register 1 CRZ_SRCSZ1

Bit	31	30	29	28	27	26	25	24	23	22	21	20	19	18	17	16
Name	HS															
Type	R/W															
Bit	15	14	13	12	11	10	9	8	7	6	5	4	3	2	1	0
Name	WS															
Type	R/W															

The register specifies the size of source image after coarse shrink process. **The allowable maximum size is 2048x2048**. Note that the width of source image must be a multiple of $8xH_{max}$ and the height of source image must be a multiple of $8xV_{max}$ when Block Coarse Shrinking is involved.

WS The register field specifies the width of source image after coarse shrink process.

1 The width of source image after coarse shrink process is 1.

2 The width of source image is 2.

…

HS The register field specifies the height of source image after coarse shrink process.

1 The height of source image after coarse shrink process is 1.

2 The height of source image after coarse shrink process is 2.

…

MTK Confidential Release for Konka

6.7.2.6 Capture Resize Target Image Size Register 1

CRZ+0014h Capture Resize Target Image Size Register 1 CRZ_TARSZ1

Bit	31	30	29	28	27	26	25	24	23	22	21	20	19	18	17	16
Name	HT															
Type	R/W															
Bit	15	14	13	12	11	10	9	8	7	6	5	4	3	2	1	0
Name	WT															
Type	R/W															

The register specifies the size of target image. **The allowable maximum size is 2048x2048.**

WT The register field specifies the width of target image.

1 The width of target image is 1.

2 The width of target image is 2.

…

HT The register field specifies the height of target image.

1 The height of target image is 1.

2 The height of target image is 2.

…

6.7.2.7 Capture Resize Horizontal Ratio Register 1

CRZ+0018h Capture Resize Horizontal Ratio Register CRZ_HRATIO1

Bit	31	30	29	28	27	26	25	24	23	22	21	20	19	18	17	16
Name	RATIO [31:16]															
Type	R/W															
Bit	15	14	13	12	11	10	9	8	7	6	5	4	3	2	1	0
Name	RATIO [15:0]															
Type	R/W															

The register specifies horizontal resizing ratio. It is obtained by CRZ_SRCSZ.WS * 2^{20} / CRZ_TARSZ.WT.

6.7.2.8 Capture Resize Vertical Ratio Register 1

CRZ+001Ch Capture Resize Vertical Ratio Register 1 CRZ_VRATIO1

Bit	31	30	29	28	27	26	25	24	23	22	21	20	19	18	17	16
Name	RATIO [31:16]															
Type	R/W															
Bit	15	14	13	12	11	10	9	8	7	6	5	4	3	2	1	0
Name	RATIO [15:0]															
Type	R/W															

The register specifies vertical resizing ratio. It is obtained by CRZ_SRCSZ.HS * 2^{20} / CRZ_TARSZ.HT.

6.7.2.9 Capture Resize Horizontal Residual Register 1

CRZ+0020h Capture Resize Horizontal Residual Register 1 CRZ_HRES1

Bit	31	30	29	28	27	26	25	24	23	22	21	20	19	18	17	16
Name																
Type																
Bit	15	14	13	12	11	10	9	8	7	6	5	4	3	2	1	0
Name	RESIDUAL															
Type	R/W															

MTK Confidential Release for Konka

The register specifies horizontal residual. It is obtained by CRZ_SRCSZ.WS % CRZ_TARSZ.WT. The allowable maximum value is 2046.

6.7.2.10 Capture Resize Vertical Residual Register 1

CRZ+0024h Capture Resize Vertical Residual Register 1 CRZ_VRES1

Bit	31	30	29	28	27	26	25	24	23	22	21	20	19	18	17	16
Name																
Type																
Bit	15	14	13	12	11	10	9	8	7	6	5	4	3	2	1	0
Name	RESIDUAL															
Type	R/W															

The register specifies vertical residual. It is obtained by CRZ_SRCSZ.HS % CRZ_TARSZ.HT. The allowable maximum value is 2046.

6.7.2.11 Capture Resize Fine Resizing Configuration Register

CRZ+0040h Capture Resize Fine Resizing Configuration Register CRZ_FRCFG

Bit	31	30	29	28	27	26	25	24	23	22	21	20	19	18	17	16
Name	WMSZ															
Type	R/W															
Bit	15	14	13	12	11	10	9	8	7	6	5	4	3	2	1	0
Name							PCSF1				VRINTEN	HRINTEN				VRSS
Type							R/W				R/W	R/W				R/W
Reset							00				0	0				0

The register specifies various setting of control for fine resizing, including of horizontal and vertical resizing. **Note that all parameters must be set before horizontal and vertical resizing proceeds.**

VRSS The register bit specifies whether subsampling for vertical resizing is enabled. For throughput issue, vertical resizing may be simplified by subsampling lines vertically. The register bit is only valid in pixel-based mode.

- **0** Subsampling for vertical resizing is disabled.
- **1** Subsampling for vertical resizing is enabled.

HRINTEN HR (Horizontal Resizing) Interrupt Enable. When interrupt for HR is enabled, an interrupt is generated whenever HR finishes.

- **0** Interrupt for HR is disabled.
- **1** Interrupt for HR is enabled.

VRINTEN VR (Vertical Resizing) Interrupt Enable. When interrupt for VR is enabled, an interrupt is generated whenever VR finishes.

- **0** Interrupt for VR is disabled.
- **1** Interrupt for VR is enabled.

PCSF1 Coarse Shrinking Factor 1 for pixel-based resizing. **Only horizontal coarse shrinking is supported for pixel-based resizing**.

- **00** No coarse shrinking.
- **01** Image width becomes 1/2 of original size after coarse shrink pass.
- **10** Image width becomes 1/4 of original size after coarse shrink pass.
- **11** Image width becomes 1/8 of original size after coarse shrink pass.

MTK Confidential Release for Konka

WMSZ It stands for Working Memory SiZe. The register specifies how many lines after horizontal resizing can be filled into working memory. **Its minimum value is 4.**

6.7.2.12 Capture Resize Pixel-Based Resizing Working Memory Base Address Register

CRZ+005Ch **Capture Resize Pixel-Based Resizing Working Memory Base Address Register** **CRZ_PRWMBASE**

Bit	31	30	29	28	27	26	25	24	23	22	21	20	19	18	17	16
Name	PRWMBASE [31:16]															
Type	R/W															
Bit	15	14	13	12	11	10	9	8	7	6	5	4	3	2	1	0
Name	PRWMBASE [15:0]															
Type	R/W															

The register specifies the base address of working memory in pixel-based resizing mode. It must be byte-aligned. **When CRZ_CFG.LB_SEL is set, this address should be set as 0x40020000.**

6.7.2.13 Capture Resize Information Register 0

CRZ+00B0h **Capture Resize Information Register 0** **CRZ_INFO0**

Bit	31	30	29	28	27	26	25	24	23	22	21	20	19	18	17	16
Name	INFO[31:16]															
Type	RO															
Bit	15	14	13	12	11	10	9	8	7	6	5	4	3	2	1	0
Name	INFO[15:0]															
Type	RO															

The register shows progress of BLKCS. But they are not real processed width/height. Sampling factors must be taken into consideration. For example, if (V_Y, V_U, V_V)=(2,4,4) then real processed width/height are two times of the register.

INFO[31:16] BLKCS y
INFO[15:00] BLKCS x

6.7.2.14 Capture Resize Information Register 1

CRZ+00B4 **Capture Resize Information Register 1** **CRZ_INFO1**

Bit	31	30	29	28	27	26	25	24	23	22	21	20	19	18	17	16
Name	INFO[31:16]															
Type	RO															
Bit	15	14	13	12	11	10	9	8	7	6	5	4	3	2	1	0
Name	INFO[15:0]															
Type	RO															

The register shows progress of BLK2PEL.

INFO[31:16] BLK2PEL y
INFO[15:00] BLK2PEL x

MTK Confidential Release for Konka

6.7.2.15 Capture Resize Information Register 2

CRZ+00B8 Capture Resize Information Register 2 CRZ_INFO2

Bit	31	30	29	28	27	26	25	24	23	22	21	20	19	18	17	16
Name	INFO[31:16]															
Type	RO															
Bit	15	14	13	12	11	10	9	8	7	6	5	4	3	2	1	0
Name	INFO[15:0]															
Type	RO															

The register shows progress of pixels received from BLKCS in fine resizing stage.

INFO[31:16] Indicates the account of vertical lines received from BLKCS in fine resizing stage.

INFO[15:00] Indicates the account of horizontal pixels received from BLKCS in fine resizing stage. Note that it becomes zero when resizing completes.

6.7.2.16 Capture Resize Information Register 3

CRZ+00BC Capture Resize Information Register 3 CRZ_INFO3

Bit	31	30	29	28	27	26	25	24	23	22	21	20	19	18	17	16
Name	INFO[31:16]															
Type	RO															
Bit	15	14	13	12	11	10	9	8	7	6	5	4	3	2	1	0
Name	INFO[15:0]															
Type	RO															

The register shows progress of horizontal resizing in fine resizing stage.

INFO[31:16] Indicates the account of horizontal resizing in fine resizing stage in horizontal direction.

INFO[15:00] Indicates the account of horizontal resizing in fine resizing stage in vertical direction.

6.7.2.17 Capture Resize Information Register 4

CRZ+00C0 Capture Resize Information Register 4 CRZ_INFO4

Bit	31	30	29	28	27	26	25	24	23	22	21	20	19	18	17	16
Name	INFO[31:16]															
Type	RO															
Bit	15	14	13	12	11	10	9	8	7	6	5	4	3	2	1	0
Name	INFO[15:0]															
Type	RO															

The register shows progress of vertical resizing in fine resizing stage.

INFO[31:16] Indicates the account of vertical resizing in fine resizing stage in horizontal direction.

INFO[15:00] Indicates the account of vertical resizing in fine resizing stage in vertical direction.

6.7.2.18 Capture Resize Information Register 5

CRZ+00C5 Capture Resize Information Register 5 CRZ_INFO5

Bit	31	30	29	28	27	26	25	24	23	22	21	20	19	18	17	16
Name	INFO[31:16]															
Type	RO															
Bit	15	14	13	12	11	10	9	8	7	6	5	4	3	2	1	0
Name	INFO[15:0]															
Type	RO															

MTK Confidential Release for Konka

The register shows progress of YUV-to-RGB

INFO[31:16] Indicates YUV-to-RGB in horizontal direction.
INFO[15:00] Indicates YUV-to-RGB in vertical direction.

6.7.3 Application Notes

- Working memory. Maximum value is 16 and minimum 4. **Remember that each pixel occupies 2 bytes**. Thus minimum requirement for working memory in pixel-based resizing is (pixel number in a line) x2x4 bytes.
- Configuration procedure for pixel-based image sources

```
CRZ_CFG.PSEL=1;
CRZ_CFG.PELSRC = 0;
CRZ_SRCSZ = source image size;
CRZ_TARSZ = target image size;
CRZ_HRATIO = horizontal ratio;
CRZ_VRATIO = vertical ratio;
CRZ_HRES = horizontal residual;
CRZ_VRES = vertical residual;
CRZ_FRCFG = working memory size, interrupt enable;
CRZ_PRWMBASE = working memory base;
CRZ_CON = 0x6;
// Then wait interrupt or polling CRZ_INT.PELHRINT or CRZ_INT.PELVRINT
```

6.8 Drop Resize

6.8.1 General Description

This block provides a simple resizing function by performing pixel and line dropping. It receives image data from the Video Encode DMA for videophone local display or the IBW3 DMA for thumbnail image dump, performs the image resizing function and outputs to the image process engine module. It can scale down the input image by any ratio. However, the maximum sizes of input and output images are limited to 2048x2048.

6.8.2 Register Definitions

6.8.2.1 Register Map

Table 50 shows the register map.

REGISTER ADDRESS	REGISTER NAME	SYNONYM
DRZ+ 0000h	Drop Resize Start Register	**DRZ_STR**
DRZ+ 0004h	Drop Resize Control Register	**DRZ_CON**
DRZ + 0008h	Drop Resize Status Register	**DRZ_STA**
DRZ + 000Ch	Drop Resize Interrupt Acknowledge Register	**DRZ_ACKINT**
DRZ + 0010h	Drop Resize Source Image Size Register	**DRZ_SRC_SIZE**
DRZ + 0014h	Drop Resize Target Image Size Register	**DRZ_TAR_SIZE**
DRZ + 0020h	Drop Resize Horizontal Ratio Register	**DRZ_RAT_H**
DRZ + 0024h	Drop Resize Vertical Ratio Register	**DRZ_RAT_V**

MTK Confidential Release for Konka

Table 50 Register map.

6.8.2.2 Register Description

Followings are detail descriptions of each register.

DRZ+0000h Drop Resize Start Register DRZ_STR

Bit	31	30	29	28	27	26	25	24	23	22	21	20	19	18	17	16
Name																
Type	R/W	R/W	R/W	R/W	R/W	R/W	R/W	R/W	R/W	R/W	R/W	R/W	R/W	R/W	R/W	R/W
Reset	0	0	0	0	0	0	0	0	0	0	0	0	0	0	0	0
Bit	15	14	13	12	11	10	9	8	7	6	5	4	3	2	1	0
Name																**STR**
Type	R/W	R/W	R/W	R/W	R/W	R/W	R/W	R/W	R/W	R/W	R/W	R/W	R/W	R/W	R/W	R/W
Reset	0	0	0	0	0	0	0	0	0	0	0	0	0	0	0	0

This register controls the activity of Drop Resize. Note that before setting STR to “1”, all the configurations shall be done by giving proper values.

STR Start the Drop resize engine. Write 1 to this bit will start the FSM of Drop resize. Write 0 to this bit will reset the FSM of Drop resize.

DRZ+0004h Drop Resize Configuration Register DRZ_CON

Bit	31	30	29	28	27	26	25	24	23	22	21	20	19	18	17	16
Name																
Type																
Reset																
Bit	15	14	13	12	11	10	9	8	7	6	5	4	3	2	1	0
Name												**PSEL**	**AUTO RSTR**			**IT**
Type												R/W	R/W			R/W

MTK Confidential Release for Konka

Reset												0	0			0

The register specifies the configuration of Drop resize.

IT Interrupt Enabling
- **0** Disable
- **1** Enable

AUTO RSTR Automatic restart. Drop Resize automatically restarts itself while current frame is finished.
- **0** Disable
- **1** Enable

PSEL Pixel engine selection
- **0** Video encode DMA
- **1** IBW3 DMA.

DRZ+0008h Drop Resize Status Register DRZ_STA

Bit	31	30	29	28	27	26	25	24	23	22	21	20	19	18	17	16
Name																RUN
Type																RO
Reset																0
Bit	15	14	13	12	11	10	9	8	7	6	5	4	3	2	1	0
Name																IT
Type																RO
Reset																0

This register helps software program being well aware of the global status of Drop Resize.

IT Interrupt status for Drop Resize
- **0** No interrupt is generated.
- **1** An interrupt is pending and waiting for service.

RUN Drop Resize status
- **0** Drop Resize is stopped or has completed the transfer already.
- **1** Drop Resize is currently running.

DRZ+000Ch Drop Resize Interrupt Acknowledge Register DRZ_ACKINT

Bit	31	30	29	28	27	26	25	24	23	22	21	20	19	18	17	16
Name																
Type																
Bit	15	14	13	12	11	10	9	8	7	6	5	4	3	2	1	0
Name																ACK
Type																WO

This register is used to acknowledge the current interrupt request associated with the completion event of Drop Resize by software program. Note that this is a write-only register, and any read to it will return a value of “0”.

ACK Interrupt acknowledge for the Drop Resize
- **0** No effect
- **1** Interrupt request is acknowledged and should be relinquished.

DRZ+0010h Drop Resize Source Image Size Register DRZ_SRC_SIZE

Bit	31	30	29	28	27	26	25	24	23	22	21	20	19	18	17	16
Name	V															
Type	R/W															
Reset	0															
Bit	15	14	13	12	11	10	9	8	7	6	5	4	3	2	1	0
Name	H															

MTK Confidential Release for Konka

Type	R/W
Reset	0

The register specifies the size of source image. **The maximum allowable size is 2048x2048**.

V the height of source image-1

H the width of source image-1

DRZ+0014h Drop Resize Target Image Size Register DRZ_TAR_SIZE

Bit	31	30	29	28	27	26	25	24	23	22	21	20	19	18	17	16
Name	V															
Type	R/W															
Reset	0															
Bit	15	14	13	12	11	10	9	8	7	6	5	4	3	2	1	0
Name	H															
Type	R/W															
Reset	0															

The register specifies the size of target image. **The maximum allowable size is 2048x2048**.

V the height of target image-1

H the width of target image-1

DRZ+0020h Drop Resize Horizontal Ratio Register DRZ_RAT_H

Bit	31	30	29	28	27	26	25	24	23	22	21	20	19	18	17	16
Name	I [31:16]															
Type	R/W															
Reset	0															
Bit	15	14	13	12	11	10	9	8	7	6	5	4	3	2	1	0
Name	Q [15:0]															
Type	R/W															
Reset	0															

The register specifies horizontal resizing ratio. It is obtained by (the width of source image/the width of target image) = I + Q/P = I + Q/the width of target image.

I [31:0] the integer part

Q [31:0] the denominator

DRZ+0024h Drop Resize Vertical Ratio Register DRZ_RAT_V

Bit	31	30	29	28	27	26	25	24	23	22	21	20	19	18	17	16
Name	I [31:16]															
Type	R/W															
Reset	0															
Bit	15	14	13	12	11	10	9	8	7	6	5	4	3	2	1	0
Name	Q [15:0]															
Type	R/W															
Reset	0															

The register specifies horizontal resizing ratio. It is obtained by (the height of source image/the height of target image) = I + Q/P = I + Q/the height of target image.

I [31:0] the integer part

Q [31:0] the denominator

MTK Confidential Release for Konka

6.9 Post Resize

6.9.1 General Description

Figure 27 shows the block diagram of post resize. It receives image data from a block-based source such as JPEG decoder or from a scan line based source, and then performs image resizing. The capability of resizing in the block is divided into two portions, coarse pass and fine pass. The first pass is coarse resizing pass and it is able to shrink image by a factor of 1, 1/4, 1/16, or 1/64. The second pass is the fine resizing pass, which is composed of horizontal and vertical resizing, and it is able to shrink or enlarge image in fractional ratio. The maximum allowable image size for the fine resizing pass is 2048x2048. Thus the maximum allowable image size for coarse resizing pass is 16384x16384.

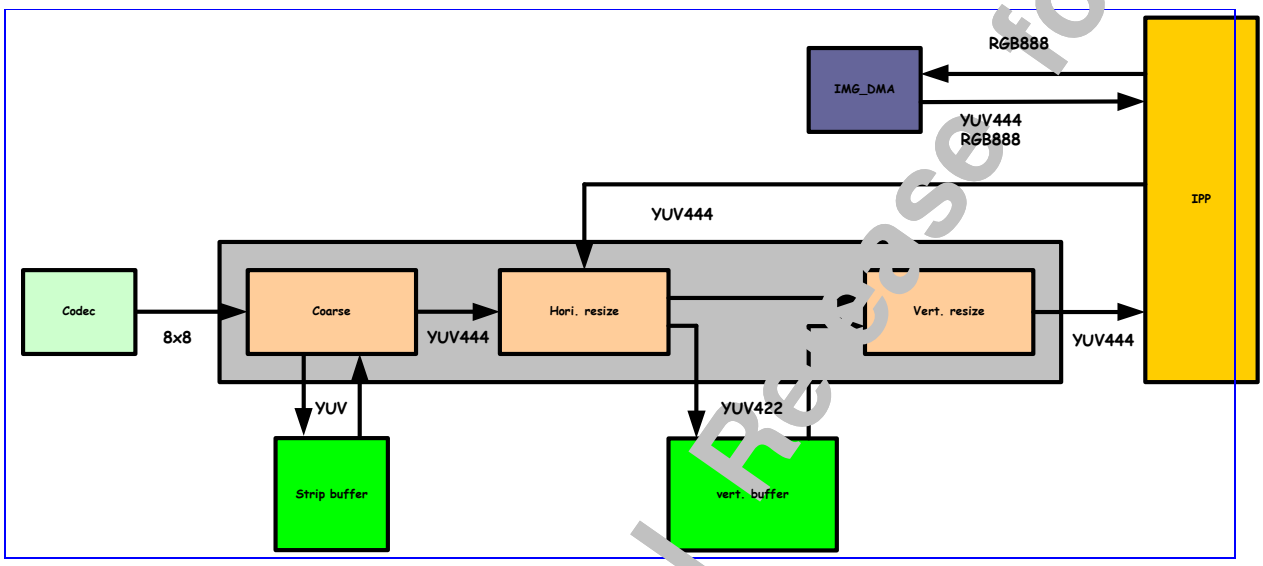

Figure 28 Block diagram of the post resize

The strip buffer of coarse resizing pass accumulates de-compressed 8x8 YUV blocks separately. These YUV data are packed into pixels and sent to the fine resizing pass. There is one GMC port employed in the coarse resize for the strip buffer read/write.

The fine resizing pass is composed of horizontal and vertical resizing blocks. It can scale up or down the input image by any ratio. However, the maximum sizes of input and output images are limited to 2048x2048. The horizontal resizing function is a combination of 2's power average and bi-linear interpolation. The vertical resizing function is a bi-linear interpolation. The input and output format are both YUV444. But the internal working memory format is YUV422 to mitigate memory and bandwidth requirements. There is one GMC port employed in the fine resize for the vertical buffer read/write.

6.9.2 Working Memories

There are two working memories in post resize. One is the strip buffer, and the other is the vertical buffer.

6.9.2.1 Strip Buffer

Let's denote sampling factor for Y-component as (H_Y, V_Y), U-component as (H_U, V_U) and V-component as (H_V, V_V) in a JPEG file. The minimum requirement of memory size for the strip buffer is **(the image width of after the coarse resizing pass) * (V_Y * 8 + V_U * 8 + V_V * 8)** bytes. It is (2048) * (4 * 8 + 4 * 8 + 2 * 8) = 160K bytes for extreme cases. To enhance the throughput of JPEG decode process, software may use double buffer scheme. Then it becomes 320K

MTK Confidential Release for Konka

bytes. Please note that the strip buffer is composed of the Y buffer, U buffer, and V buffer. Software can allocate separate memory for them.

6.9.2.2 Vertical Buffer

The minimum requirement of memory for the vertical buffer is **(the target image width) * (the line number of vertical buffer) * 2** bytes. It is (2048) * (2) * 2 = 4K bytes for extreme cases. To enhance throughputs of overall data paths, software may use double buffer scheme. Then it becomes 8K bytes.

6.9.3 Source Image

For the coarse resizing pass, the width of the source image must be multiples of **8 * (maximum horizontal sampling factor)**. Similarly, the height of the source image must be multiples of **8 * (maximum vertical sampling factor)**. The maximum size of target image is 2048x2048.

For the fine resizing pass, the maximum size of source image and target image are both 2048x2048.

6.9.4 Flow Control

For the coarse resizing pass, the coarse resizing will send pixel data to the fine resizing when they are ready with hand shake signal. If strip buffer is full, the coarse resizing will halt image data input until the strip buffer is available.

For the fine resizing pass, the fine resizing will send pixel data to the image post processing when they are ready with hand shake signal. If vertical buffer is full, the fine resizing will halt image data input until the vertical is available.

6.9.5 Throughput

For block-based image sources, the process time for one pixel is about 3 cycles. Therefore if 15 frames per second are desired and Post Resize is running at 52 MHz then the maximum pixel number per frame is about 1.15M. That is about 1075x1075.

For pixel-based image sources, the process time for one pixel is about 2.25 cycles. Therefore if 15 frames per second are desired and Post Resize is running at 52 MHz then the maximum pixel number per frame is about 1.5M. That is about 1241x1241.

Since memory bandwidth requirements are different for scale up and down, it may be able to enhance throughput by adjusting the register setting of PRZ_CFG.BWA0/BWB0. When scaling up, memory bandwidth requirement for read is higher than memory bandwidth requirements for write. However, when scaling down, memory bandwidth requirement for write is higher than memory bandwidth requirements for read. Therefore when horizontally scaling up, throughput can be enhance by setting PRZ_CFG.B0 with higher value than PRZ_CFG.A0. Similarly when horizontally scaling down, throughput can be enhance by setting PRZ_CFG.A0 with higher value than PRZ_CFG.B0. Therefore when vertically scale up throughput can be enhance by setting PRZ_CFG.B1 with higher value than PRZ_CFG.A1. Similarly when vertically scale down throughput can be enhance by setting PRZ_CFG.A1 with higher value than PRZ_CFG.B1.

6.9.6 Register Definitions

REGISTER ADDRESS	REGISTER NAME	SYNONYM
PRZ+ 0000h	Post Resize Configuration Register	PRZ_CFG
PRZ + 0004h	Post Resize Control Register	PRZ_CON
PRZ + 0008h	Post Resize Status Register	PRZ_STA
PRZ + 000Ch	Post Resize Interrupt Register	PRZ_INT
PRZ + 0010h	Post Resize Source Image Size Register 1	PRZ_SRCSZ1

MTK Confidential Release for Konka

PRZ + 0014h	Post Resize Target Image Size Register 1	PRZ_TARSZ1
PRZ + 0018h	Post Resize Horizontal Ratio Register 1	PRZ_HRATIO1
PRZ + 001Ch	Post Resize Vertical Ratio Register 1	PRZ_VRATIO1
PRZ + 0020h	Post Resize Horizontal Residual Register 1	PRZ_HRES1
PRZ + 0024h	Post Resize Vertical Residual Register 1	PRZ_VRES1
PRZ + 0030h	Post Resize Block Coarse Shrinking Configuration Register	PRZ_BLKCSCFG
PRZ + 0034h	Post Resize Y-Component Line Buffer Memory Base Address	PRZ_YLMBASE
PRZ + 0038h	Post Resize U-Component Line Buffer Memory Base Address	PRZ_ULMBASE
PRZ + 003Ch	Post Resize V-Component Line Buffer Memory Base Address	PRZ_VLMBASE
PRZ + 0040h	Post Resize Fine Resizing Configuration Register	PRZ_FRCFG
PRZ + 0050h	Post Resize Y Line Buffer Size Register	PRZ_YLBSIZE
PRZ + 005Ch	Post Resize Pixel-Based Resizing Working Memory Base Address	PRZ_PRWMBASE
PRZ + 00B0h	Post Resize Information Register 0	PRZ_INFO0
PRZ + 00B4h	Post Resize Information Register 1	PRZ_INFO1
PRZ + 00B8h	Post Resize Information Register 2	PRZ_INFO2
PRZ + 00BCh	Post Resize Information Register 3	PRZ_INFO3
PRZ + 00C0h	Post Resize Information Register 4	PRZ_INFO4
PRZ + 00C4h	Post Resize Information Register 5	PRZ_INFO5

6.9.6.1 Post Resize Configuration Register

PRZ+0000h Post Resize Configuration Register PRZ_CFG

Bit	31	30	29	28	27	26	25	24	23	22	21	20	19	18	17	16
Name									BWB0				BWA0			
Type									R/W				R/W			
Reset									0000				0000			
Bit	15	14	13	12	11	10	9	8	7	6	5	4	3	2	1	0
Name									LBSEL		PSEL	PCON	PELSRC1			
Type									R/W		R/W	R/W	R/W			
Reset									0		0	0	0000			

The register is for global configuration of Post Resize.

PELSRC1 The register field specifies which pixel-based image source is serviced.

- **1** MPEG4 Encoder DMA
- **2** MPEG4 Decoder DMA
- **3** IBW4 DMA
- **5** IPP
- **6** JPEG Decoder
- **Others** Reserved

PCON The register bit specifies if pixel-based resizing continues whenever an image finishes processing. Once continuous run for pixel-based resizing is enabled and pixel-based resizing is running, the only way to stop is to reset Post Resize. If immediate stop is desired, reset Post Resize directly. If the last image is desired, set the register bit to '0' first. Then wait till Post Resize is not busy again. Finally reset Post Resize.

- **0** Single run
- **1** Continuous run

PSEL The register field determines if block-based image sources is serviced.

MTK Confidential Release for Konka

0 Block-based image source will be serviced.

1 Block-based image source will NOT be serviced completely. Clock for block-based processes will be stopped and block-based image input will be blocked completely.

LBSEL line buffer selection. **When CRZ_CFG.LB_SEL is set, this bit should not be set.**

0 Shared memory.

1 Dedicated memory.

BWA0 Bandwidth selection for port A of memory interface 0. In block-based mode, this is the memory interface between BLKCS and BLKHR. In pixel-based mode, that's is memory interface between PELHR and PELVR. Each memory interface has one write port (port A) and one read port (port B). The arbitration between port A and port B of memory interface 0 is based on the setting of the register fields BWA0 and BWB0. The arbitration scheme is fair between port A and port B. However, if the register field BWA0 is set larger value than the register field BWB0 then port A can get more bandwidth than port B.

0 If memory access of port A and port B take place simultaneously, then grant will be given to port B whenever port A gets grant once.

1 If memory access of port A and port B take place simultaneously, then grant will be given to port B whenever port A gets grant twice.

2 If memory access of port A and port B take place simultaneously, then grant will be given to port B whenever port A gets grant three times.

…

BWB0 Bandwidth selection for port b of memory interface 0. In block-based mode, this is the memory interface between BLKCS and BLKHR. In pixel-based mode, that's is memory interface between PELHR and PELVR. Each memory interface has one write port (port A) and one read port (port B). The arbitration between port A and port B of memory interface 0 is based on the setting of the register fields BWA0 and BWB0. The arbitration scheme is fair between port A and port B. However, if the register field BWB0 is set larger value than the register field BWA0 then port B can get more bandwidth than port A.

0 If memory access of port A and port B take place simultaneously, then grant will be given to port A whenever port B gets grant once.

1 If memory access of port A and port B take place simultaneously, then grant will be given to port A whenever port B gets grant twice.

2 If memory access of port A and port B take place simultaneously, then grant will be given to port A whenever port B gets grant three times.

…

6.9.6.2 Post Resize Control Register

PRZ+0004h Post Resize Control Register PRZ_CON

Bit	31	30	29	28	27	26	25	24	23	22	21	20	19	18	17	16
Name														PELVRRST	PELHRRST	BLKCSRST
Type														R/W	R/W	R/W
Reset														0	0	0
Bit	15	14	13	12	11	10	9	8	7	6	5	4	3	2	1	0
Name														PELVRENA	PELHRENA	BLKCSENA
Type														R/W	R/W	R/W
Reset														0	0	0

The register is for global control of Post Resize. **Note that block-based and pixel-based resizing cannot execute parallel. Furthermore, software reset will NOT reset all register setting. Remember trigger Post Resize first before trigger image sources to Post Resize.**

MTK Confidential Release for Konka

BLKCSENA Writing '1' to the register bit will cause Block Coarse Shrinking proceed to work. Block Coarse Shrinking is designed to cooperate width JPEG decoder. It works on the fly. Bu it needs to be restarted every time before working.

PELHRENA Writing '1' to the register bit will cause pixel-based fine horizontal resizing proceed to work. However, if horizontal resizing is not necessary, do not write '1' to the register bit.

PELVRENA Writing '1' to the register bit will cause pixel-based fine vertical resizing proceed to work. However, if vertical resizing is not necessary, do not write '1' to the register bit.

BLKCSRST Writing '1' to the register bit will force Block Coarse Shrinking to stop immediately and have Block Coarse Shrinking keep in reset state. In order to have Block Coarse Shrinking go to normal state, writing '0' to the register bit.

PELHRRST Writing '1' to the register will cause pixel-based fine horizontal resizing to stop immediately and have pixel-based fine horizontal resizing keep in reset state. In order to have pixel-based fine horizontal resizing go to normal state, writing '0' to the register bit.

PELVRRST Writing '1' to the register will pixel-based fine vertical resizing to stop immediately and have pixel-based fine vertical resizing keep in reset state. In order to have pixel-based fine vertical resizing go to normal state, writing '0' to the register bit.

6.9.6.3 Post Resize Status Register

PRZ+0008h Post Resize Status Register PRZ_STA

Bit	31	30	29	28	27	26	25	24	23	22	21	20	19	18	17	16
Name																
Type																
Reset																
Bit	15	14	13	12	11	10	9	8	7	6	5	4	3	2	1	0
Name												BLKINTRABSY		PELVRBUSY	PELHRBUSY	BLKCSBUSY
Type												RO		RO	RO	RO
Reset												0		0	0	0

The register indicates global status of Post Resize.

BLKCSBUSY Block-based CS (Coarse Shrinking) Busy Status

PELHRBUSY Pixel-based HR (Horizontal Resizing) Busy Status

PELVRBUSY Pixel-based VR (Vertical Resizing) Busy Status

BLKINTRABSY Block-based CS (Coarse Shrinking) Intra-Block Busy Status

6.9.6.4 Post Resize Interrupt Register

PRZ+000Ch Post Resize Interrupt Register PRZ_INT

Bit	31	30	29	28	27	26	25	24	23	22	21	20	19	18	17	16
Name																
Type																
Reset																
Bit	15	14	13	12	11	10	9	8	7	6	5	4	3	2	1	0
Name														PELVRINT	PELHRINT	BLKCSINT
Type														RC	RC	RC
Reset														0	0	0

The register shows up the interrupt status of resizer.

MTK Confidential Release for Konka

BLKCSINT Interrupt for BLKCS (Block-based Coarse Shrink). No matter if the register bit PRZ_BLKCSCFG.INTEN is enabled or not, the register bit will be active whenever BLKCS completes. It could be used as software interrupt by polling the register bit. Clear it by reading the register.

PELHRINT Interrupt for PELHR (Pixel-based Horizontal Resizing). No matter if the register bit PRZ_FRCFG.HRINTEN is enabled or not, the register bit will be active whenever PELHR completes. It could be used as software interrupt by polling the register bit. Clear it by reading the register.

PELVRINT Interrupt for PELVR (Pixel -based Vertical Resizing). No matter if the register bit PRZ_FRCFG.VRINTEN is enabled or not, the register bit will be active whenever PELVR completes. It could be used as software interrupt by polling the register bit. Clear it by reading the register.

6.9.6.5 Post Resize Source Image Size Register 1

PRZ+0010h Post Resize Source Image Size Register 1 PRZ_SRCSZ1

Bit	31	30	29	28	27	26	25	24	23	22	21	20	19	18	17	16
Name	HS															
Type	R/W															
Bit	15	14	13	12	11	10	9	8	7	6	5	4	3	2	1	0
Name	WS															
Type	R/W															

The register specifies the size of source image after coarse shrink process. **The maximum allowable size is 2048x2048**. Note that for the width of source image must be multiples of $8xH_{max}$ and the height of source image must be multiples of $8xV_{max}$ when Block Coarse Shrinking is involved.

WS The register field specifies the width of source image after coarse shrink process.

1 The width of source image after coarse shrink process is 1.

2 The width of source image is 2.

…

HS The register field specifies the height of source image after coarse shrink process.

1 The height of source image after coarse shrink process is 1.

2 The height of source image after coarse shrink process is 2.

…

6.9.6.6 Post Resize Target Image Size Register 1

PRZ+0014h Post Resize Target Image Size Register 1 PRZ_TARSZ1

Bit	31	30	29	28	27	26	25	24	23	22	21	20	19	18	17	16
Name	HT															
Type	R/W															
Bit	15	14	13	12	11	10	9	8	7	6	5	4	3	2	1	0
Name	WT															
Type	R/W															

The register specifies the size of target image. **The maximum allowable size is 2048x2048.**

WT The register field specifies the width of target image.

1 The width of target image is 1.

2 The width of target image is 2.

…

HT The register field specifies the height of target image.

1 The height of target image is 1.

2 The height of target image is 2.

MTK Confidential Release for Konka

…

6.9.6.7 Post Resize Horizontal Ratio Register 1

PRZ+0018h Post Resize Horizontal Ratio Register PRZ_HRATIO1

Bit	31	30	29	28	27	26	25	24	23	22	21	20	19	18	17	16
Name	RATIO [31:16]															
Type	R/W															
Bit	15	14	13	12	11	10	9	8	7	6	5	4	3	2	1	0
Name	RATIO [15:0]															
Type	R/W															

The register specifies horizontal resizing ratio. It is obtained by PRZ_SRCSZ.WS * 2^{20} / PRZ_TARSZ.WT.

6.9.6.8 Post Resize Vertical Ratio Register 1

PRZ+001Ch Post Resize Vertical Ratio Register 1 PRZ_VRATIO1

Bit	31	30	29	28	27	26	25	24	23	22	21	20	19	18	17	16
Name	RATIO [31:16]															
Type	R/W															
Bit	15	14	13	12	11	10	9	8	7	6	5	4	3	2	1	0
Name	RATIO [15:0]															
Type	R/W															

The register specifies vertical resizing ratio. It is obtained by PRZ_SRCSZ.HS * 2^{20} / PRZ_TARSZ.HT.

6.9.6.9 Post Resize Horizontal Residual Register 1

PRZ+0020h Post Resize Horizontal Residual Register 1 PRZ_HRES1

Bit	31	30	29	28	27	26	25	24	23	22	21	20	19	18	17	16
Name																
Type																
Bit	15	14	13	12	11	10	9	8	7	6	5	4	3	2	1	0
Name	RESIDUAL															
Type	R/W															

The register specifies horizontal residual. It is obtained by PRZ_SRCSZ.WS % PRZ_TARSZ.WT. The maximum allowable value is 2046.

6.9.6.10 Post Resize Vertical Residual Register 1

PRZ+0024h Post Resize Vertical Residual Register 1 PRZ_VRES1

Bit	31	30	29	28	27	26	25	24	23	22	21	20	19	18	17	16
Name																
Type																
Bit	15	14	13	12	11	10	9	8	7	6	5	4	3	2	1	0
Name	RESIDUAL															
Type	R/W															

The register specifies vertical residual. It is obtained by PRZ_SRCSZ.HS % PRZ_TARSZ.HT. The allowable maximum value is 2046.

MTK Confidential Release for Konka

6.9.6.11 Post Resize Block Coarse Shrinking Configuration Register

PRZ+0030h **Post Resize Block Coarse Shrinking Configuration Register** **PRZ_BLKCSCFG**

Bit	31	30	29	28	27	26	25	24	23	22	21	20	19	18	17	16
Name																INTEN
Type																R/W
Reset																0
Bit	15	14	13	12	11	10	9	8	7	6	5	4	3	2	1	0
Name	VV		HV		VU		HU		VY		HY				CSF	
Type	R/W		R/W		R/W		R/W		R/W		R/W				R/W	
Reset	00		00		00		00		00		00				00	

The register is for various configuration of Block Coarse Shrinking in Post Resize. Block Coarse Shrinking is dedicated for JPEG decoder. Therefore all processes are based on blocks composed of 8x8 pixels. **Note that all parameters must be set before writing '1' to the register bit PRZ_CON.BLKCSENA**.

CSF It stands for Coarse Shrink Factor. The value specifies the scale factor in coarse shrink pass.
- **00** Image size does not change after coarse shrink pass.
- **01** Image size becomes 1/4 of original size after coarse shrink pass.
- **10** Image size becomes 1/16 of original size after coarse shrink pass.
- **11** Image size becomes 1/64 of original size after coarse shrink pass.

HY Horizontal sampling factor for Y-component
- **00** Horizontal sampling factor for Y-component is 1.
- **01** Horizontal sampling factor for Y-component is 2.
- **10** Horizontal sampling factor for Y-component is 4.
- **11** No Y-component.

VY Vertical sampling factor for Y-component
- **00** Vertical sampling factor for Y-component is 1.
- **01** Vertical sampling factor for Y-component is 2.
- **10** Vertical sampling factor for Y-component is 4.
- **11** No Y-component.

HU Horizontal sampling factor for U-component
- **00** Horizontal sampling factor for U-component is 1.
- **01** Horizontal sampling factor for U-component is 2.
- **10** Horizontal sampling factor for U-component is 4.
- **11** No U-component.

VU Vertical sampling factor for U-component
- **00** Vertical sampling factor for U-component is 1.
- **01** Vertical sampling factor for U-component is 2.
- **10** Vertical sampling factor for U-component is 4.
- **11** No U-component.

HV Horizontal sampling factor for V-component
- **00** Horizontal sampling factor for V-component is 1.
- **01** Horizontal sampling factor for V-component is 2.
- **10** Horizontal sampling factor for V-component is 4.
- **11** No V-component.

VV Vertical sampling factor for V-component
- **00** Vertical sampling factor for V-component is 1.

MTK Confidential Release for Konka

01 Vertical sampling factor for V-component is 2.
10 Vertical sampling factor for V-component is 4.
11 No V-component.

INTEN Interrupt Enable. When interrupt for BLKCS is enabled, interrupt will arise whenever BLKCS finishes.
0 Interrupt for BLKCS is disabled.
1 Interrupt for BLKCS is enabled.

6.9.6.12 Post Resize Y-Component Line Buffer Memory Base Address Register

PRZ+0034h **Post Resize Y-Component Line Buffer Memory Base Address Register** **PRZ_YLMBASE**

Bit	31	30	29	28	27	26	25	24	23	22	21	20	19	18	17	16
Name	YLMBASE [31:16]															
Type	R/W															
Bit	15	14	13	12	11	10	9	8	7	6	5	4	3	2	1	0
Name	YLMBASE [15:0]															
Type	R/W															

The register specifies the base address of line buffer for Y-component. It could be byte-aligned. It is only useful in block-based mode.

6.9.6.13 Post Resize U-Component Line Buffer Memory Base Address Register

PRZ+0038h **Post Resize U-Component Line Buffer Memory Base Address Register** **PRZ_ULMBASE**

Bit	31	30	29	28	27	26	25	24	23	22	21	20	19	18	17	16
Name	ULMBASE [31:16]															
Type	R/W															
Bit	15	14	13	12	11	10	9	8	7	6	5	4	3	2	1	0
Name	ULMBASE [15:0]															
Type	R/W															

The register specifies the base address of line buffer for U-component. It could be byte -aligned. It is only useful in block-based mode.

6.9.6.14 Post Resize V-Component Line Buffer Memory Base Address Register

PRZ+003Ch **Post Resize V-Component Line Buffer Memory Base Address Register** **PRZ_VLMBASE**

Bit	31	30	29	28	27	26	25	24	23	22	21	20	19	18	17	16
Name	VLMBASE [31:16]															
Type	R/W															
Bit	15	14	13	12	11	10	9	8	7	6	5	4	3	2	1	0
Name	VLMBASE [15:0]															
Type	R/W															

The register specifies the base address of line buffer for V-component. It could be byte -aligned. It is only useful in block-based mode.

MTK Confidential Release for Konka

6.9.6.15 Post Resize Fine Resizing Configuration Register

PRZ+0040h Post Resize Fine Resizing Configuration Register PRZ_FRCFG

Bit	31	30	29	28	27	26	25	24	23	22	21	20	19	18	17	16
Name	WMSZ															
Type	R/W															
Bit	15	14	13	12	11	10	9	8	7	6	5	4	3	2	1	0
Name	OSEL				PCSF2		PCSF1				VRINTEN	HRINTEN				VRSS
Type	R/W				R/W		R/W				R/W	R/W				R/W
Reset	0				00		00				0	0				0

The register specifies various setting of control for fine resizing, including of horizontal and vertical resizing. **Note that all parameters must be set before horizontal and vertical resizing proceeds.**

VRSS The register bit specifies whether subsampling for vertical resizing is enabled. For throughput issue, vertical resizing may be simplified by subsampling lines vertically. The register bit is only valid in pixel-based mode.

- **0** Subsampling for vertical resizing is disabled.
- **1** Subsampling for vertical resizing is enabled.

HRINTEN HR (Horizontal Resizing) Interrupt Enable. When interrupt for HR is enabled, interrupt will be issued whenever HR finishes.

- **0** Interrupt for HR is disabled.
- **1** Interrupt for HR is enabled.

VRINTEN VR (Vertical Resizing) Interrupt Enable. When interrupt for VR is enabled, interrupt will be issued whenever VR finishes.

- **0** Interrupt for VR is disabled.
- **1** Interrupt for VR is enabled.

PCSF1 Coarse Shrinking Factor 1 for pixel-based resizing. **Only horizontal coarse shrinking is supported for pixel-based resizing**.

- **00** No coarse shrinking.
- **01** Image width becomes 1/2 of original size after coarse shrink pass.
- **10** Image width becomes 1/4 of original size after coarse shrink pass.
- **11** Image width becomes 1/8 of original size after coarse shrink pass.

OSEL The register bit is used to select output modules.

- **0** Image DMA.
- **1** IPP.

WMSZ It stands for Working Memory Size. The register specifies how many lines after horizontal resizing can be filled into working memory. **Its minimum value is 4.**

6.9.6.16 Post Resize Y Line Buffer Size Register

PRZ+0050h Post Resize Y Line Buffer Size Register PRZ_YLBSIZE

Bit	31	30	29	28	27	26	25	24	23	22	21	20	19	18	17	16
Name																
Type																
Bit	15	14	13	12	11	10	9	8	7	6	5	4	3	2	1	0
Name	YLBZE															
Type	R/W															

The register specifies line buffer size for image data after coarse shrinking. It is only useful in block-based mode.

MTK Confidential Release for Konka

YLBSZ It stands for Y-component Line Buffer Size. The register field specifies how many lines of Y-component can be filled into line buffer. Line buffer size for U- and V-component can be determined according to the sampling factor. For example, if (V_Y, V_U, V_V)=(4,4,2) and line buffer size for Y-component is 32, lines then the line buffer size for U-component is also 32 lines and V-component 16 lines. If line buffer has capacity for whole image after block coarse shrinking, then block coarse shrinking can be used for the application of scaling down by a factor of 2, or 4, or 8. If dual line buffer is used, block coarse shrinking and horizontal resizing can execute parallel. The maximum allowable value is 2048.

1 Line buffer size for Y-component is 1 lines.

2 Line buffer size for Y-component is 2 lines.

3 Line buffer size for Y-component is 3 lines.

…

6.9.6.17 Post Resize Pixel-Baed Resizing Working Memory Base Address Register

PRZ+005Ch **Post Resize Pixel-Based Resizing Working Memory Base Address Register** **PRZ_PRWMBASE**

Bit	31	30	29	28	27	26	25	24	23	22	21	20	19	18	17	16
Name	PRWMBASE [31:16]															
Type	R/W															
Bit	15	14	13	12	11	10	9	8	7	6	5	4	3	2	1	0
Name	PRWMBASE [15:0]															
Type	R/W															

The register specifies the base address of working memory in pixel-based resizing mode. It must be byte-aligned.

When PRZ_CFG.LB_SEL is set, this address should be set as 0x40020000.

6.9.6.18 Post Resize Information Register 0

PRZ+00B0h **Post Resize Information Register 0** **PRZ_INFO0**

Bit	31	30	29	28	27	26	25	24	23	22	21	20	19	18	17	16
Name	INFO[31:16]															
Type	RO															
Bit	15	14	13	12	11	10	9	8	7	6	5	4	3	2	1	0
Name	INFO[15:0]															
Type	RO															

The register shows progress of BLKCS. But they are not real processed width/height. Sampling factors must be taken into consideration. For example, if (V_Y, V_U, V_V)=(2,4,4) then real processed width/height are two times that of the register value.

INFO[31:16] BLKCS y

INFO[15:00] BLKCS x

6.9.6.19 Post Resize Information Register 1

PRZ+00B4 **Post Resize Information Register 1** **PRZ_INFO1**

Bit	31	30	29	28	27	26	25	24	23	22	21	20	19	18	17	16
Name	INFO[31:16]															
Type	RO															
Bit	15	14	13	12	11	10	9	8	7	6	5	4	3	2	1	0
Name	INFO[15:0]															
Type	RO															

MTK Confidential Release for Konka

The register shows progress of BLK2PEL.

INFO[31:16] BLK2PEL y
INFO[15:00] BLK2PEL x

6.9.6.20 Post Resize Information Register 2

PRZ+00B8 Post Resize Information Register 2 PRZ_INFO2

Bit	31	30	29	28	27	26	25	24	23	22	21	20	19	18	17	16
Name	INFO[31:16]															
Type	RO															
Bit	15	14	13	12	11	10	9	8	7	6	5	4	3	2	1	0
Name	INFO[15:0]															
Type	RO															

The register shows progress of pixels received from BLKCS in fine resizing stage.

INFO[31:16] Indicate the account of vertical lines received from BLKCS in fine resizing stage.
INFO[15:00] Indicate the account of horizontal pixels received from BLKCS in fine resizing stage. Note that it will become zero when resizing completes.

6.9.6.21 Post Resize Information Register 3

PRZ+00BC Post Resize Information Register 3 PRZ_INFO3

Bit	31	30	29	28	27	26	25	24	23	22	21	20	19	18	17	16
Name	INFO[31:16]															
Type	RO															
Bit	15	14	13	12	11	10	9	8	7	6	5	4	3	2	1	0
Name	INFO[15:0]															
Type	RO															

The register shows progress of horizontal resizing in fine resizing stage.

INFO[31:16] Indicate the account of horizontal resizing in fine resizing stage in horizontal direction.
INFO[15:00] Indicate the account of horizontal resizing in fine resizing stage in vertical direction.

6.9.6.22 Post Resize Information Register 4

PRZ+00C0 Post Resize Information Register 4 PRZ_INFO4

Bit	31	30	29	28	27	26	25	24	23	22	21	20	19	18	17	16
Name	INFO[31:16]															
Type	RO															
Bit	15	14	13	12	11	10	9	8	7	6	5	4	3	2	1	0
Name	INFO[15:0]															
Type	RO															

The register shows progress of vertical resizing in fine resizing stage.

INFO[31:16] Indicate the account of vertical resizing in fine resizing stage in horizontal direction.
INFO[15:00] Indicate the account of vertical resizing in fine resizing stage in vertical direction.

MTK Confidential Release for Konka

6.9.6.23 Post Resize Information Register 5

PRZ+00C5 Post Resize Information Register 5 PRZ_INFO5

Bit	31	30	29	28	27	26	25	24	23	22	21	20	19	18	17	16
Name	INFO[31:16]															
Type	RO															
Bit	15	14	13	12	11	10	9	8	7	6	5	4	3	2	1	0
Name	INFO[15:0]															
Type	RO															

The register shows progress of YUV-to-RGB

INFO[31:16] Indicate YUV-to-RGB in horizontal direction.
INFO[15:00] Indicate YUV-to-RGB in vertical direction.

6.9.7 Application Notes

- Determine line buffer size by taking into consideration of CSF and sampling factor. For example, if CSF=3 and (Vy, Vu, Vv)=(4,x,x) then minimum of line buffer could be 4 instead of 32.
- Working memory. Maximum value is 16 and minimum 4. **Remember that each pixel occupies 2 bytes**. Thus minimum requirement for working memory in pixel-based resizing is (pixel number in a line) x2x4 bytes.
- Configuration procedure for block-based image sources

```
PRZ_CFG.PSEL=0;
PRZ_CFG.PELSRC = 5;
PRZ_BLKCSCFG = select CSF, sampling factor, interrupt enable;
PRZ_YLBBASE = memory base for Y-component;
PRZ_ULBBASE = memory base for U-component;
PRZ_VLBBASE = memory base for V-component;
PRZ_YLBSIZE = line buffer size for Y-component;
Other same as that for pixel-based image sources
PRZ_CON = 0x7;
// Then wait interrupt or polling PRZ_INT.BLKCSINT or PRZ_INT.BLKHRINT or
// PRZ_INT.BLKVRINT
```

- Configuration procedure for pixel-based image sources

```
PRZ_CFG.PSEL=1;
PRZ_CFG.PELSRC = 1~4;
PRZ_SRCSZ = source image size;
PRZ_TARSZ = target image size;
PRZ_HRATIO = horizontal ratio;
PRZ_VRATIO = vertical ratio;
PRZ_HRES = horizontal residual;
PRZ_VRES = vertical residual;
PRZ_FRCFG = working memory size, interrupt enable;
PRZ_PRWMBASE = working memory base;
PRZ_CON = 0x6;

// Then wait interrupt or polling PRZ_INT.PELHRINT or PRZ_INT.PELVRINT
```

MTK Confidential Release for Konka

6.10 JPEG Decoder

6.10.1 Overview

To boost JPEG image processing performance, a hardware block is preferred to aid software and deal with JPEG file as much as possible. As a result, JPEG Decoder is designed to decode all baseline and progressive JPEG images with all YUV sampling frequencies combinations. To gain the best speed performance, JPEG decoder handles all portions of JPEG files except the 17-byte SOF marker. The software program only needs to program related control registers based on the SOF marker and waits for an interrupt coming from hardware. Taking into consideration the limited size of memories, hardware also supports multiple runs of JPEG progressive images and breakpoints insertion in huge JPEG files. Multiple runs can greatly reduce memory usage by 1/N where N is the number of runs. Breakpoints insertion allows software to load partial JPEG file from external flash to internal memory if the JPEG file is too large to sit internally at one time.

6.10.2 Register Definitions

JPEG+0000h JPEG Decoder Control Register JPEG_FILE_ADDR

Bit	31	30	29	28	27	26	25	24	23	22	21	20	19	18	17	16
Name	FILE_ADDR[31:16]															
Type	R/W	R/W	R/W	R/W	R/W	R/W	R/W	R/W	R/W	R/W	R/W	R/W	R/W	R/W	R/W	R/W
Bit	15	14	13	12	11	10	9	8	7	6	5	4	3	2	1	0
Name	FILE_ADDR[15:0]															
Type	R/W	R/W	R/W	R/W	R/W	R/W	R/W	R/W	R/W	R/W	R/W	R/W	R/W	R/W	R/W	R/W

The JPEG file starting address must be a multiple of 4. Not affected by global reset and JPEG decoder abort.

FILE_ADDR Starting physical address of input JPEG file in SRAM

JPEG+0004h JPEG Decoder Control Register TBLS_START_ADDR

Bit	31	30	29	28	27	26	25	24	23	22	21	20	19	18	17	16
Name	START_ADDR[31:16]															
Type	R/W	R/W	R/W	R/W	R/W	R/W	R/W	R/W	R/W	R/W	R/W	R/W	R/W	R/W	R/W	R/W
Bit	15	14	13	12	11	10	9	8	7	6	5	4	3	2	1	0
Name	START_ADDR[15:11]															
Type	R/W	R/W	R/W	R/W	R/W											

The table starting address must be a multiple of 2K. Not affected by global reset and JPEG decoder abort. Need reprogramming for multiple runs of progressive images.

START_ADDR The starting address of the memory space for 4 quantization tables and 8 Huffman tables. The memory space must be 2K Bytes at least.

JPEG+0008h JPEG Decoder Control Register SAMP_FACTOR

Bit	31	30	29	28	27	26	25	24	23	22	21	20	19	18	17	16
Name																
Type																
Bit	15	14	13	12	11	10	9	8	7	6	5	4	3	2	1	0
Name					H_SAMP_0[1:0]		V_SAMP_0[1:0]		H_SAMP_1[1:0]		V_SAMP_1[1:0]		H_SAMP_2[1:0]		V_SAMP_2[1:0]	
Type					R/W		R/W		R/W		R/W		R/W		R/W	

This register contains the sampling factor of YUV components. Not affected by global reset and JPEG decoder abort.

H_SAMP_0 Horizontal sampling factor of the 1st component, Y.

MTK Confidential Release for konka

00 SF is 1
01 SF is 2
10 Invalid
11 SF is 4

V_SAMP_0 Vertical sampling factor of the 1st component, Y.
00 SF is 1
01 SF is 2
10 Invalid
11 SF is 4

H_SAMP_1 Horizontal sampling factor of the 2nd component, U.
00 SF is 1
01 SF is 2
10 Invalid
12 SF is 4

V_SAMP_1 Vertical sampling factor of the 2nd component, U.
00 SF is 1
01 SF is 2
10 Invalid
11 SF is 4

H_SAMP_2 Horizontal sampling factor of the 3rd component, V.
00 SF is 1
01 SF is 2
10 Invalid
13 SF is 4

V_SAMP_2 Vertical sampling factor of the 3rd component, V.
00 SF is 1
01 SF is 2
10 Invalid
11 SF is 4

JPEG+000Ch JPEG Decoder Control Register COMP_ID

Bit	31	30	29	28	27	26	25	24	23	22	21	20	19	18	17	16
Name	COMP0_ID[7:0]								COMP1_ID[7:0]							
Type	R/W								R/W							
Bit	15	14	13	12	11	10	9	8	7	6	5	4	3	2	1	0
Name	COMP2_ID[7:0]															
Type	R/W															

This register contains the IDs of YUV components. Not affected by global reset and JPEG decoder abort.

COMP0_ID The 1st component (Y) ID is extracted from SOF marker.
COMP1_ID The 2nd component (U) ID is extracted from SOF marker.
COMP2_ID The 3rd component (V) ID is extracted from SOF marker.

JPEG+0010h JPEG Decoder Control Register TOTAL_MCU_NUM

Bit	31	30	29	28	27	26	25	24	23	22	21	20	19	18	17	16
Name	TOTAL_MCU_NUM[31:16]															
Type	R/W															
Bit	15	14	13	12	11	10	9	8	7	6	5	4	3	2	1	0
Name	TOTAL_MCU_NUM[15:0]															
Type	R/W															

MTK Confidential Release for Konka

This register contains the total MCU number in interleaved scan. Note that if the MCU number is N, program (N-1) into this register. Not affected by global reset and JPEG decoder abort.

JPEG+0014h JPEG Decoder Control Register

INTLV_MCU_NUM_PER_MCU_ROW

Bit	31	30	29	28	27	26	25	24	23	22	21	20	19	18	17	16
Name																
Type																
Bit	15	14	13	12	11	10	9	8	7	6	5	4	3	2	1	0
Name							INTLV_MCU_NUM_PER_MCU_ROW[9:0]									
Type							R/W									

This register contains the MCU number per row in interleaved scan. Not affected by global reset and JPEG decoder abort.

JPEG+0018h JPEG Decoder Control Register

COMP0_NONINTLV_DU_NUM_PER_MCU_ROW

Bit	31	30	29	28	27	26	25	24	23	22	21	20	19	18	17	16
Name																
Type																
Bit	15	14	13	12	11	10	9	8	7	6	5	4	3	2	1	0
Name			DUMMY_DU				COMP0_NONINTLV_MCU_NUM_PER_MCU_ROW[9:0]									
Type			R/W				R/W									

This register contains the MCU number per row in non-interleaved scan of the 1st component (Y). Not affected by global reset and JPEG decoder abort. Note that COMP0_NONINTLV_MCU_NUM_PER_MCU_ROW includes the number of DUMMY_DU if any.

DUMMY_DU Dummy data unit number in non-interleaved scan of the 1st component

- **00** no dummy data unit
- **01** one dummy data unit
- **10** two dummy data units
- **11** three dummy data units

COMP0_NONINTLV_MCU_NUM_PER_MCU_ROW The MCU number per row in non-interleaved scan of the 1st component (Y).

In progressive image, dummy data unit columns are inevitable if more than 8 redundant pixel columns are transmitted to fill up the last MCU in a MCU row. For example, in 422 format, a MCU is composed of 16 x 16 pixels. If a given image size is 355 x 400, for JPEG encoder to compress, the image grows to 368 x 400 first such that both width and height are multiples of 16. It can be seen that to be divisible by 16, there are 13 redundant Y-component pixels in the horizontal (width) direction. These 13 Y-component pixels are compressed by encoders in interleaved scans because a complete MCU needs 16x16 pixels. It is different from non-interleaved scans, because in non-interleaved scans a complete MCU only needs 8x8 Y-component pixels. Therefore, among the 13 redundant pixels the first 5 are still compressed as interleaved scans while the last 8 are dropped. In this case, software must program the DUMMY_DU field to 1 so the hardware knows one 8x8 data unit should be skipped at the last of a MCU row in non-interleaved scan.

MTK Confidential Release for Yonka

JPEG+001Ch JPEG Decoder Control Register — COMP1_NONINTLV_DU_NUM_PER_MCU_ROW

Bit	31	30	29	28	27	26	25	24	23	22	21	20	19	18	17	16
Name																
Type																
Bit	15	14	13	12	11	10	9	8	7	6	5	4	3	2	1	0
Name			DUMMY_DU				COMP1_NONINTLV_MCU_NUM_PER_MCU_ROW[9:0]									
Type			R/W				R/W									

This register contains the MCU number per row in non-interleaved scan of the 2nd component (Y). Not affected by global reset and JPEG decoder abort. Note that COMP1_NONINTLV_MCU_NUM_PER_MCU_ROW includes the number of DUMMY_DU if any.

DUMMY_DU Dummy data unit number in non-interleaved scan of the 2nd component

- **00** no dummy data unit
- **01** one dummy data unit
- **10** two dummy data units
- **11** three dummy data units

COMP1_NONINTLV_MCU_NUM_PER_MCU_ROW The MCU number per row in non-interleaved scan of the 2nd component (U).

JPEG+0020h JPEG Decoder Control Register — COMP2_NONINTLV_DU_NUM_PER_MCU_ROW

Bit	31	30	29	28	27	26	25	24	23	22	21	20	19	18	17	16
Name																
Type																
Bit	15	14	13	12	11	10	9	8	7	6	5	4	3	2	1	0
Name			DUMMY_DU				COMP2_NONINTLV_MCU_NUM_PER_MCU_ROW[9:0]									
Type			R/W				R/W									

This register contains the MCU number per row in non-interleaved scan of the 3rd component (V). Not affected by global reset and JPEG decoder abort. Note that COMP2_NONINTLV_MCU_NUM_PER_MCU_ROW includes the number of DUMMY_DU if any.

DUMMY_DU Dummy data unit number in non-interleaved scan of the 3rd component

- **00** no dummy data unit
- **01** one dummy data unit
- **10** two dummy data units
- **11** three dummy data units

COMP2_NONINTLV_MCU_NUM_PER_MCU_ROW The MCU number per row in non-interleaved scan of the 3rd component (V).

JPEG+0024h JPEG Decoder Control Register — COMP0_DATA_UNIT_NUM

Bit	31	30	29	28	27	26	25	24	23	22	21	20	19	18	17	16
Name	COMP0_DATA_UNIT_NUM[31:16]															
Type	R/W															
Bit	15	14	13	12	11	10	9	8	7	6	5	4	3	2	1	0
Name	COMP0_DATA_UNIT_NUM[15:0]															
Type	R/W															

MTK Confidential Release for Konka

This register contains the 8x8 data unit number of the 1st component in non-interleaved scans. Note that if the data unit number is N, program (N-1) into this register. Not affected by global reset and JPEG decoder abort.

JPEG+0028h JPEG Decoder Control Register — COMP1_DATA_UNIT_NUM

Bit	31	30	29	28	27	26	25	24	23	22	21	20	19	18	17	16
Name	COMP1_DATA_UNIT_NUM[31:16]															
Type	R/W															
Bit	15	14	13	12	11	10	9	8	7	6	5	4	3	2	1	0
Name	COMP1_DATA_UNIT_NUM[15:0]															
Type	R/W															

This register contains the 8x8 data unit number of the 2nd component in non-interleaved frame. Note that if the data unit number is N, program (N-1) into this register. Not affected by global reset and JPEG decoder abort.

JPEG+002Ch JPEG Decoder Control Register — COMP2_DATA_UNIT_NUM

Bit	31	30	29	28	27	26	25	24	23	22	21	20	19	18	17	16
Name	COMP2_DATA_UNIT_NUM[31:16]															
Type	R/W															
Bit	15	14	13	12	11	10	9	8	7	6	5	4	3	2	1	0
Name	COMP2_DATA_UNIT_NUM[15:0]															
Type	R/W															

This register contains the 8x8 data unit number of the 3rd component in non-interleaved frame. Note that if the data unit number is N, program (N-1) into this register. Not affected by global reset and JPEG decoder abort.

JPEG+0030h JPEG Decoder Control Register — COMP0_PROGR_COEFF_START_ADDR

Bit	31	30	29	28	27	26	25	24	23	22	21	20	19	18	17	16
Name	COMP0_PROGR_COEFF_START_ADDR[31:16]															
Type	R/W															
Bit	15	14	13	12	11	10	9	8	7	6	5	4	3	2	1	0
Name	COMP0_PROGR_COEFF_START_ADDR[15:0]															
Type	R/W															

This register contains the starting address of the memory space storing the intermediate progressive coefficients of the 1st component. This value must be a multiple of 4. Not affected by global reset and JPEG decoder abort.

JPEG+0034h JPEG Decoder Control Register — COMP1_PROGR_COEFF_START_ADDR

Bit	31	30	29	28	27	26	25	24	23	22	21	20	19	18	17	16
Name	COMP1_PROGR_COEFF_START_ADDR[31:16]															
Type	R/W															
Bit	15	14	13	12	11	10	9	8	7	6	5	4	3	2	1	0
Name	COMP1_PROGR_COEFF_START_ADDR[15:0]															
Type	R/W															

This register contains the starting address of the memory space storing the intermediate progressive coefficients of the 2nd component. This value must be a multiple of 4. Not affected by global reset and JPEG decoder abort.

MTK Confidential Release for Yonka

JPEG+0038h JPEG Decoder Control Register COMP2_PROGR_COEFF_START_ADDR

Bit	31	30	29	28	27	26	25	24	23	22	21	20	19	18	17	16
Name	COMP2_PROGR_COEFF_START_ADDR[31:16]															
Type	R/W															
Bit	15	14	13	12	11	10	9	8	7	6	5	4	3	2	1	0
Name	COMP2_PROGR_COEFF_START_ADDR[15:0]															
Type	R/W															

This register contains the starting address of the memory space storing the intermediate progressive coefficients of the 3rd component. This value must be a multiple of 4. Not affected by global reset and JPEG decoder abort.

JPEG+003Ch JPEG Decoder Control Register JPEG_CTRL

Bit	31	30	29	28	27	26	25	24	23	22	21	20	19	18	17	16
Name		JPEG_MODE	DU9[2:0]			DU8[2:0]			DU7[2:0]			DU6[2:0]			DU5[2:0]	
Type		R/W	R/W			R/W			R/W			R/W			R/W	
Bit	15	14	13	12	11	10	9	8	7	6	5	4	3	2	1	0
Name		DU4[2:0]			DU3[2:0]			DU2[2:0]			DU1[2:0]			DU0[2:0]		
Type		R/W			R/W			R/W			R/W			R/W		

This register contains 2 information: the operating mode of JPEG decoder and the order of 3 components in a MCU. Affected by global reset and JPEG decoder abort. Need reprogramming for multiple runs of progressive images.

JPEG_MODE The operating mode of JPEG decoder.

- **0** Baseline mode
- **1** Progressive mode

DU9 The 10th data unit component category in a MCU

- **100** The 10th data unit is the 1st component (Y)
- **101** The 10th data unit is the 2nd component (U)
- **110** The 10th data unit is the 3rd component (V)
- **111** Not used in current frame
- **000-011** Invalid

DU8 The 9th data unit component category in a MCU

- **100** The 9th data unit is the 1st component (Y)
- **101** The 9th data unit is the 2nd component (U)
- **110** The 9th data unit is the 3rd component (V)
- **111** Not used in current frame
- **000-011** Invalid

DU7 The 8th data unit component category in a MCU

- **100** The 8th data unit is the 1st component (Y)
- **101** The 8th data unit is the 2nd component (U)
- **110** The 8th data unit is the 3rd component (V)
- **111** Not used in current frame
- **000-011** Invalid

DU6 The 7th data unit component category in a MCU

- **100** The 7th data unit is the 1st component (Y)
- **101** The 7th data unit is the 2nd component (U)
- **110** The 7th data unit is the 3rd component (V)

MTK Confidential Release for Konka

111 Not used in current frame
000-011 Invalid

DU5 The 6th data unit component category in a MCU
100 The 6th data unit is the 1st component (Y)
101 The 6th data unit is the 2nd component (U)
110 The 6th data unit is the 3rd component (V)
111 Not used in current frame
000-011 Invalid

DU4 The 5th data unit component category in a MCU
100 The 5th data unit is the 1st component (Y)
101 The 5th data unit is the 2nd component (U)
110 The 5th data unit is the 3rd component (V)
111 Not used in current frame
000-011 Invalid

DU3 The 4th data unit component category in a MCU
100 The 4th data unit is the 1st component (Y)
101 The 4th data unit is the 2nd component (U)
110 The 4th data unit is the 3rd component (V)
111 Not used in current frame
000-011 Invalid

DU2 The 3rd data unit component category in a MCU
100 The 3rd data unit is the 1st component (Y)
101 The 3rd data unit is the 2nd component (U)
110 The 3rd data unit is the 3rd component (V)
111 Not used in current frame
000-011 Invalid

DU1 The 2nd data unit component category in a MCU
100 The 2nd data unit is the 1st component (Y)
101 The 2nd data unit is the 2nd component (U)
110 The 2nd data unit is the 3rd component (V)
111 Not used in current frame
000-011 Invalid

DU0 The 1st data unit component category in a MCU
100 The 1st data unit is the 1st component (Y)
101 The 1st data unit is the 2nd component (U)
110 The 1st data unit is the 3rd component (V)
111 Not used in current frame
000-011 Invalid

JPEG+0040h JPEG Decoder Control Register JPEG_DEC_TRIG

Bit	31	30	29	28	27	26	25	24	23	22	21	20	19	18	17	16
Name																
Type	WO															
Bit	15	14	13	12	11	10	9	8	7	6	5	4	3	2	1	0
Name																
Type	WO															

JPEG_DEC_TRIG triggers JPEG decoding operation no matter what value is programmed.

MTK Confidential Release for Konka

JPEG+0044h JPEG Decoder Control Register — JPEG_DEC_ABORT

Bit	31	30	29	28	27	26	25	24	23	22	21	20	19	18	17	16
Name																
Type	WO															
Bit	15	14	13	12	11	10	9	8	7	6	5	4	3	2	1	0
Name																
Type	WO															

JPEG_DEC_ABORT aborts JPEG decoding operation and reset JPEG decoder hardware no matter what value is programmed.

JPEG+0048h JPEG Decoder Control Register — JPEG_FILE_BRP

Bit	31	30	29	28	27	26	25	24	23	22	21	20	19	18	17	16
Name	JPEG_FILE_BRP[31:16]															
Type	R/W															
Bit	15	14	13	12	11	10	9	8	7	6	5	4	3	2	1	0
Name	JPEG_FILE_BRP[15:0]															
Type	R/W															

JPEG_DEC_BRP stands for a 32-bit byte breakpoint address that hardware stalls once the breakpoint address is encountered. This control register provides a solution for software to swap internal memory content with external memory in case the JPEG source file is too big for internal memory to store at one time. A breakpoint interrupt fires when hardware DMA address hits the breakpoint address. Note that the breakpoint address must be a multiple of 4. Not affected by global reset and JPEG decoder abort.

JPEG+004Ch JPEG Decoder Control Register — JPEG_FILE_TOTAL_SIZE

Bit	31	30	29	28	27	26	25	24	23	22	21	20	19	18	17	16
Name	JPEG_FILE_TOTAL_SIZE[31:16]															
Type	R/W															
Bit	15	14	13	12	11	10	9	8	7	6	5	4	3	2	1	0
Name	JPEG_FILE_TOTAL_SIZE[15:0]															
Type	R/W															

JPEG_FILE_TOTAL_SIZE represents the JPEG source file size in bytes. Hardware fires a file overflow interrupt and stall if the DMA address equals to this address.

Note that the breakpoint address must be a multiple of 4. If the file size is not divisible by 4, increment the size value until it is. Not affected by global reset and JPEG decoder abort.

JPEG+0050h JPEG Decoder Control Register — INTLV_FIRST_MCU_INDEX

Bit	31	30	29	28	27	26	25	24	23	22	21	20	19	18	17	16
Name													INTLV_FIRST_MCU_INDEX[19:16]			
Type													R/W			
Bit	15	14	13	12	11	10	9	8	7	6	5	4	3	2	1	0
Name	INTLV_FIRST_MCU_INDEX[15:0]															
Type	R/W															

MTK Confidential Release for Konka

This control register specifies the first MCU index that hardware processes in the interleaved scans of the current image. The JPEG decoder is able to skip certain MCUs by defining the first and last MCU index. Not affected by global reset and JPEG decoder abort.

JPEG+0054h JPEG Decoder Control Register

INTLV_LAST_MCU_INDEX

Bit	31	30	29	28	27	26	25	24	23	22	21	20	19	18	17	16
Name													INTLV_LAST_MCU_INDEX[19:16]			
Type													R/W			
Bit	15	14	13	12	11	10	9	8	7	6	5	4	3	2	1	0
Name	INTLV_LAST_MCU_INDEX[15:0]															
Type	R/W															

This control register specifies the last MCU index that hardware processes in the interleaved scans of the current image. The JPEG decoder is able to skip certain MCUs by defining the first and last MCU index. Not affected by global reset and JPEG decoder abort.

JPEG+0058h JPEG Decoder Control Register

COMP0_FIRST_MCU_INDEX

Bit	31	30	29	28	27	26	25	24	23	22	21	20	19	18	17	16
Name													COMP0_FIRST_MCU_INDEX[19:16]			
Type													R/W			
Bit	15	14	13	12	11	10	9	8	7	6	5	4	3	2	1	0
Name	COMP0_FIRST_MCU_INDEX[15:0]															
Type	R/W															

Only effective in progressive images. This control register specifies the first MCU index that hardware processes in the non-interleaved scans containing Y component of the current image. The JPEG decoder is able to skip certain MCUs by defining the first and last MCU index. Not affected by global reset and JPEG decoder abort.

JPEG+005Ch JPEG Decoder Control Register

COMP0_LAST_MCU_INDEX

Bit	31	30	29	28	27	26	25	24	23	22	21	20	19	18	17	16
Name													COMP0_LAST_MCU_INDEX[19:16]			
Type													R/W			
Bit	15	14	13	12	11	10	9	8	7	6	5	4	3	2	1	0
Name	COMP0_LAST_MCU_INDEX[15:0]															
Type	R/W															

Only effective in progressive images. This control register specifies the last MCU index that hardware processes in the non-interleaved scans containing Y component of the current image. The JPEG decoder is able to skip certain MCUs by defining the first and last MCU index. Not affected by global reset and JPEG decoder abort.

JPEG+0060h JPEG Decoder Control Register

COMP1_FIRST_MCU_INDEX

Bit	31	30	29	28	27	26	25	24	23	22	21	20	19	18	17	16
Name													COMP1_FIRST_MCU_INDEX[19:16]			
Type													R/W			
Bit	15	14	13	12	11	10	9	8	7	6	5	4	3	2	1	0

MTK Confidential Release for Konka

Name	COMP1_FIRST_MCU_INDEX[15:0]
Type	R/W

Only effective in progressive images. This control register specifies the first MCU index that hardware processes in the non-interleaved scans containing U component of the current image. The JPEG decoder is able to skip certain MCUs by defining the first and last MCU index. Not affected by global reset and JPEG decoder abort.

JPEG+0064h JPEG Decoder Control Register — COMP1_LAST_MCU_INDEX

Bit	31	30	29	28	27	26	25	24	23	22	21	20	19	18	17	16
Name													COMP1_LAST_MCU_INDEX[19:16]			
Type													R/W			
Bit	15	14	13	12	11	10	9	8	7	6	5	4	3	2	1	0
Name	COMP1_LAST_MCU_INDEX[15:0]															
Type	R/W															

Only effective in progressive images. This control register specifies the last MCU index that hardware processes in the non-interleaved scans containing U component of the current image. The JPEG decoder is able to skip certain MCUs by defining the first and last MCU index. Not affected by global reset and JPEG decoder abort.

JPEG+0068h JPEG Decoder Control Register — COMP2_FIRST_MCU_INDEX

Bit	31	30	29	28	27	26	25	24	23	22	21	20	19	18	17	16
Name													COMP2_FIRST_MCU_INDEX[19:16]			
Type													R/W			
Bit	15	14	13	12	11	10	9	8	7	6	5	4	3	2	1	0
Name	COMP2_FIRST_MCU_INDEX[15:0]															
Type	R/W															

Only effective in progressive images. This control register specifies the first MCU index that hardware processes in the non-interleaved scans containing V component of the current image. The JPEG decoder is able to skip certain MCUs by defining the first and last MCU index. Not affected by global reset and JPEG decoder abort.

JPEG+006Ch JPEG Decoder Control Register — COMP2_LAST_MCU_INDEX

Bit	31	30	29	28	27	26	25	24	23	22	21	20	19	18	17	16
Name													COMP2_LAST_MCU_INDEX[19:16]			
Type													R/W			
Bit	15	14	13	12	11	10	9	8	7	6	5	4	3	2	1	0
Name	COMP2_LAST_MCU_INDEX[15:0]															
Type	R/W															

Only effective in progressive images. This control register specifies the last MCU index that hardware processes in the non-interleaved scans containing V component of the current image. The JPEG decoder is able to skip certain MCUs by defining the first and last MCU index. Not affected by global reset and JPEG decoder abort.

JPEG+0070h JPEG Decoder Control Register — QT_ID

Bit	31	30	29	28	27	26	25	24	23	22	21	20	19	18	17	16
Name																
Type																

MTK Confidential Release for Konka

Bit	15	14	13	12	11	10	9	8	7	6	5	4	3	2	1	0
Name					COMP0_QT_ID[3:0]				COMP1_QT_ID[3:0]				COMP2_QT_ID[3:0]			
Type					R/W				R/W				R/W			

This register contains the quantization table IDs for YUV components. Not affected by global reset and JPEG decoder abort.

COMP0_QT_ID Quantization table ID of Y component directly extracted from SOF marker
COMP1_QT_ID Quantization table ID of U component directly extracted from SOF marker
COMP2_QT_ID Quantization table ID of V component directly extracted from SOF marker

JPEG+0074h JPEG Decoder Control Register

JPEG_DEC_INTERRUPT_STATUS

Bit	31	30	29	28	27	26	25	24	23	22	21	20	19	18	17	16
Name																
Type																
Bit	15	14	13	12	11	10	9	8	7	6	5	4	3	2	1	0
Name														INT2	INT1	INT0
Type														RO	RO	RO

The register reflects the interrupt status.

INT2 Set to 1 by file overflow interrupt
INT1 Set to 1 by breakpoint interrupt
INT0 Set to 1 by end of file interrupt

JPEG+0078h JPEG Decoder Control Register

JPEG_DEC_STATUS

Bit	31	30	29	28	27	26	25	24	23	22	21	20	19	18	17	16
Name		FOS	BRPS	EOFS		JPEG_DEC_STATE			HUFF_DEC_STATE				MARKER_PARSER_STATE			
Type		RO	RO	RO		RO			RO				RO			
Bit	15	14	13	12	11	10	9	8	7	6	5	4	3	2	1	0
Name	SOS_PARSER_STATE					DHT_PARSER_STATE				DQT_PARSER_STATE			DATA_UNIT_STATE			
Type	RO					RO				RO			RO			

6.11 JPEG Encoder

6.11.1 General Descriptions

The hardware JPEG encoder implements the baseline mode of Standard ISO/IEC 10918-1. It supports YUV 422 and 420 formats for color pictures and grayscale format. With the software assist and suitable destination memory address setting, JFIF/EXIF JPEG format can also be supported. For hardware reduction, it uses standard DC and AC Huffman tables for both the luminance and chrominance components. To adjust the picture compression ratio and picture quality, there are 4 levels of quantization that can be programmed. After initialization by software, the hardware JPEG encoder can generate the entire compressed file.

Figure 1 shows the procedure of the JPEG encoder. The YUV pixel data that came from image DMA are grouped into 8x8 blocks and then down-sampled to YUV 422 and YUV420 format. For grayscale encoding, only Y component is present. When encoding, the first thing to do is to turn the pixel data into the frequency domain using FDCT. After the quantizer is done, the quantized DCT coefficients are encoded by RLE and VLC.

MTK Confidential Release for Konka

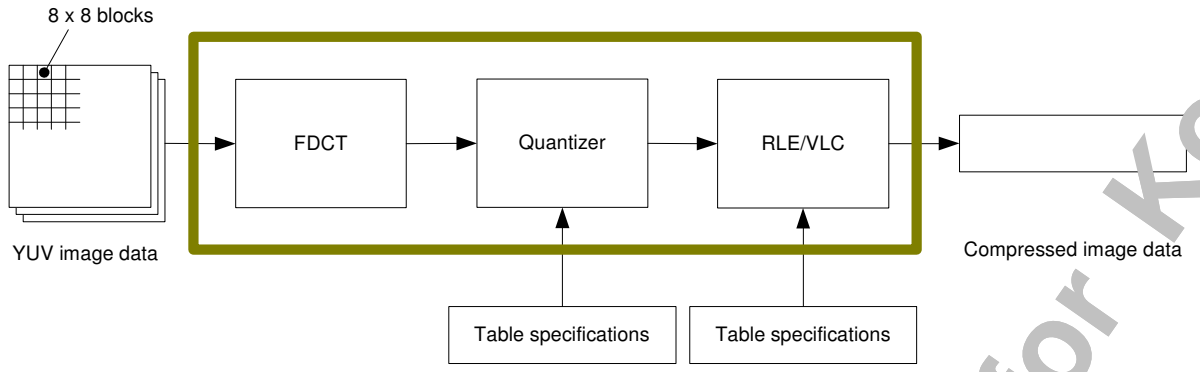

Figure 1 The procedure of JPEG encoder

6.11.2 Register Definitions

JPEG = 0x8060_0000

Register Address	Register Function	Acronym
JPEG + 008Ch	JPEG encoder reset register	**JPG_ENC_RST**
JPEG + 0090h	JPEG encoder control register	**JPG_ENC_CTL**
JPEG + 0094h	JPEG encoder interrupt status register	**JPG_ENC_INTSTS**
JPEG + 0098h	JPEG encoder block count register	**JPG_ENC_BLK_CNT**
JPEG + 009Ch	JPEG encoder quality register	**JPG_ENC_QUALITY**
JPEG + 00a0h	JPEG encoder base address register	**JPG_ENC_DEST_ADDR**
JPEG + 00a4h	JPEG encoder DMA address register	**JPG_ENC_DMA_ADDR**
JPEG + 00a8h	JPEG encoder STALL address register	**JPG_ENC_STALL_ADDR**
JPEG + 00ach	JPEG encoder frame number register	**JPG_ENC_FRAME_NUM**
JPEG + 00b0h	JPEG encoder frame count register	**JPG_ENC_FRAME_CNT**
JPEG + 00b4h	JPEG encoder base address2 register	**JPG_ENC_DEST_ADDR2**
JPEG + 00b8h	JPEG encoder DMA address2 register	**JPG_ENC_DMA_ADDR2**
JPEG + 00bch	JPEG encoder STALL address2 register	**JPG_ENC_STALL_ADDR2**

Table 51 JPEG encoder Registers

JPEG+008ch JPEG encoder reset register JPG_ENC_RST

Bit	31	30	29	28	27	26	25	24	23	22	21	20	19	18	17	16
Name																
Type																
Reset																
Bit	15	14	13	12	11	10	9	8	7	6	5	4	3	2	1	0
Name												ADDR_RL				RST
Type												WC				R/W
Reset												0				0

RST Reset the JPEG encoder.

ADDR_RL DMA address reload only for the stall condition. In other condition, this bit cannot be set. This is a Write-Clear register. This register must be set once after the stall destination address is reconfigured in the stall condition.

MTK Confidential Release for Konka

JPEG+0090h JPEG encoder control register JPG_ENC_CTL

Bit	31	30	29	28	27	26	25	24	23	22	21	20	19	18	17	16
Name																
Type																
Reset																
Bit	15	14	13	12	11	10	9	8	7	6	5	4	3	2	1	0
Name										ADDR_SW	CONT	JPG	YUV	IT	GRAY	EN
Type										R/W	R/W	R/W	R/W	R/W	R/W	R/W
Reset										0	0	0	0	1	0	0

EN Enable the JPEG encoder. This bit is cleared by hardware after encoding is done.

GRAY Do grayscale encode. Remember that the image DMA should be programmed as grayscale too.

- **0** color
- **1** grayscale

IT Interrupt enabling

- **0** Disable
- **1** Enable

YUV YUV format

- **0** YUV 422
- **1** YUV 420

JPG JPEG or other application format support

- **0** JPEG
- **1** JFIF/EXIF

CONT JPEG continuous shooting

- **0** OFF
- **1** ON

ADDR_SW JPEG destination address switch in continuous shooting mode

- **0** OFF, destination address accumulates
- **1** ON, destination address switches between JPG_ENC_DEST_ADDR and JPG_ENC_DEST_ADDR2.

JPEG+0094h JPEG encoder interrupt status register JPG_ENC_INTSTS

Bit	31	30	29	28	27	26	25	24	23	22	21	20	19	18	17	16
Name																
Type																
Reset																
Bit	15	14	13	12	11	10	9	8	7	6	5	4	3	2	1	0
Name											STALL2	STALL1			STALL	DONE
Type											RO	RO			RO	RC
Reset											0	0			0	0

DONE Indicates that encoding operation is done. This is a Read-Clear bits.

STALL Indicates that encoding operation is in the stall condition. This bit is not cleared until the stall condition is cleared and reload bit is set.

STALL1 Indicates that the current stall condition is caused by DMA_ADDR and STALL_ADDR.

STALL2 Indicates that the current stall condition is caused by DMA_ADDR2 and STALL_ADDR2.

JPEG+0098h JPEG block count register JPG_ENC_BLK_CNT

Bit	31	30	29	28	27	26	25	24	23	22	21	20	19	18	17	16

MTK Confidential Release for Konka

Bit	15	14	13	12	11	10	9	8	7	6	5	4	3	2	1	0
Name																
Type																
Reset																
Bit	15	14	13	12	11	10	9	8	7	6	5	4	3	2	1	0
Name	BLK_CNT															
Type	RO															
Reset	0															

BLK_CNT Block count has been encoded.

JPEG+009ch JPEG encoder quality register — JPG_ENC_QUALITY

Bit	31	30	29	28	27	26	25	24	23	22	21	20	19	18	17	16
Name																
Type																
Reset																
Bit	15	14	13	12	11	10	9	8	7	6	5	4	3	2	1	0
Name															QUALITY	
Type															R/W	
Reset															00	

QUALITY Encode quality.

00 Low quality (quality factor =50), 15~20 times compression ratio.

01 Fair quality (quality factor =75) , 10~15 times compression ratio

10 Good quality (quality factor =90), 6~10 times compression ratio

11 High quality (quality factor =95), 4~6 times compression ratio

JPEG+00a0h JPEG encoder base address register — JPG_ENC_DEST_ADDR

Bit	31	30	29	28	27	26	25	24	23	22	21	20	19	18	17	16
Name	BS_ADDR[31:16]															
Type	R/W															
Reset	0															
Bit	15	14	13	12	11	10	9	8	7	6	5	4	3	2	1	0
Name	BS_ADDR[15:0]															
Type	R/W															
Reset	0															

BS_ADDR Base address of encoded data.

JPEG+00a4h JPEG encoder current address register — JPG_ENC_CURR_ADDR

Bit	31	30	29	28	27	26	25	24	23	22	21	20	19	18	17	16
Name	DMA_ADDR[31:16]															
Type	RO															
Reset	0															
Bit	15	14	13	12	11	10	9	8	7	6	5	4	3	2	1	0
Name	DMA_ADDR[15:0]															
Type	RO															
Reset	0															

CURR_ADDR The current DMA address during encoding.

JPEG+00a8h JPEG encoder STALL address register — JPG_ENC_STALL_ADDR

Bit	31	30	29	28	27	26	25	24	23	22	21	20	19	18	17	16

MTK Confidential Release for Konka

Name	STALL_ADDR[31:16]															
Type	R/W															
Reset	0															
Bit	15	14	13	12	11	10	9	8	7	6	5	4	3	2	1	0
Name	STALL_ADDR[15:0]															
Type	R/W															
Reset	0															

STALL_ADDR This field is the upper bound of JPEG encoder's write-address. Note that the stall address must be word-aligned. Whenever the stall address is reached, the JPEG encoder stalls and issues an interrupt to software. After, if the software programs the JPG_ENC_STALL_ADDR to another value, the JPEG encoder resumes the encoding procedure and automatically use the JPG_ENC_DEST_ADDR as the new starting address. It means that before we change the value of JPG_ENC_STALL_ADDR, the JPG_ENC_DEST_ADDR has to be programmed to a corresponding starting address. However, if the software wants to discard the uncompleted file, it can simply reset the JPEG encoder to cancel the encode operation. Also, it is important that the value of JPG_ENC_STALL_ADDR should be larger than JPG_ENC_DEST_ADDR by at least 604 bytes to guarantee that the header of the JPEG file can be completely written into memory.

JPEG+00ach JPEG encoder continuous shooting frame number JPG_ENC_FRAME_NUM

Bit	31	30	29	28	27	26	25	24	23	22	21	20	19	18	17	16
Name																
Type																
Reset																
Bit	15	14	13	12	11	10	9	8	7	6	5	4	3	2	1	0
Name											FRAME_NUM					
Type											R/W					
Reset											0					

FRAME_NUM Frame number in continuous shooting is encoded

JPEG+00b0h JPEG encoder continuous shooting current frame count JPG_ENC_CURR_FRAME_CNT

Bit	31	30	29	28	27	26	25	24	23	22	21	20	19	18	17	16
Name																
Type																
Reset																
Bit	15	14	13	12	11	10	9	8	7	6	5	4	3	2	1	0
Name											FRAME_CNT					
Type											R/O					
Reset											0					

FRAME_CNT Frame count has been encoded.

JPEG+00b4h JPEG encoder 2nd base address register JPG_ENC_DEST_ADDR2

Bit	31	30	29	28	27	26	25	24	23	22	21	20	19	18	17	16
Name	BS_ADDR[31:16]															
Type	R/W															
Reset	0															
Bit	15	14	13	12	11	10	9	8	7	6	5	4	3	2	1	0
Name	BS_ADDR[15:0]															
Type	R/W															
Reset	0															

BS_ADDR Base address of 2nd encoded data.

MTK Confidential Release for Konka

JPEG+00b8h JPEG encoder 2nd current address register — JPG_ENC_CURR_ADDR2

Bit	31	30	29	28	27	26	25	24	23	22	21	20	19	18	17	16
Name	DMA_ADDR[31:16]															
Type	RO															
Reset	0															
Bit	15	14	13	12	11	10	9	8	7	6	5	4	3	2	1	0
Name	DMA_ADDR[15:0]															
Type	RO															
Reset	0															

CURR_ADDR The current DMA address during 2nd encoding.

JPEG+00bch JPEG encoder STALL address2 register — JPG_ENC_STALL_ADDR2

Bit	31	30	29	28	27	26	25	24	23	22	21	20	19	18	17	16
Name	STALL_ADDR2[31:16]															
Type	R/W															
Reset	0															
Bit	15	14	13	12	11	10	9	8	7	6	5	4	3	2	1	0
Name	STALL_ADDR2[15:0]															
Type	R/W															
Reset	0															

STALL_ADDR2 This field is the upper bound of JPEG encoder's write-address2. Note that the stall address2 only works in continuous shooting and memory auto-switch mode.

6.11.2.1 JFIF/EXIF support

In JFIF/EXIF mode, the JPEG encoder does not generate SOI marker and related thumbnail header and small image data. The JPEG encoder just outputs the bitstreams from DQT marker. The software needs to provide the suitable destination address after estimating the size of SOI marker, related thumbnail header and small image data. The SOI marker and related thumbnail header need to be handled by MCU and the small image data can be output by IMGDMA. With the suitable destination address configuration, the JFIF/EXIF JPEG format can be generated. **Figure 2** illustrates the data partition for JFIF/EXIF support. Before JPEG encoding, three suitable address configurations provides. The ADDR1 is provided to SOI maker and the thumbnail header. This part is handled by software. The ADDR2 is provided to IMGDMA to write RGB small image data. The last address, ADDR3, provides to the JPEG encoder to write out remaining bitstreams.

MTK Confidential Release for Konka

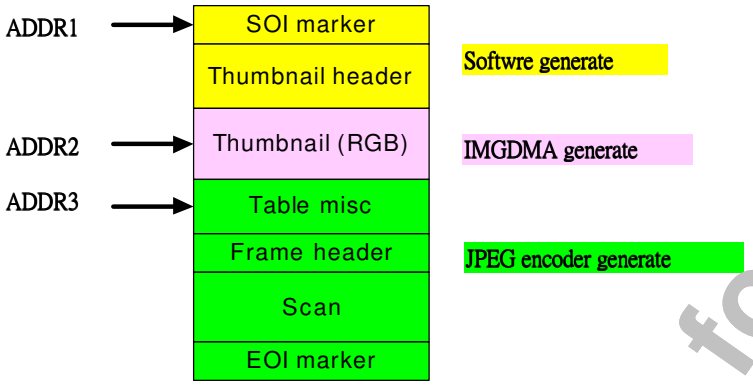

Figure 2. The JFIF/EXIF data structure.

6.12 GIF Decoder

6.12.1 General Description

GIF Decoder is aimed to decode GIF images. This hardware-assisted gif decoding alleviates the software from computation-intensive jobs, and frees the MCU for other jobs. For a handheld device with multimedia functionality, this kind of hardware acceleration is very beneficial for MCU off loading and achieving high performance. Figure 29 shows the GIF file structure. The GIF decoder is aimed to do LZW decompression, on-the-fly resizing down, clipping and pitching; header parsing is performed by software.

MTK Confidential Release for Konka

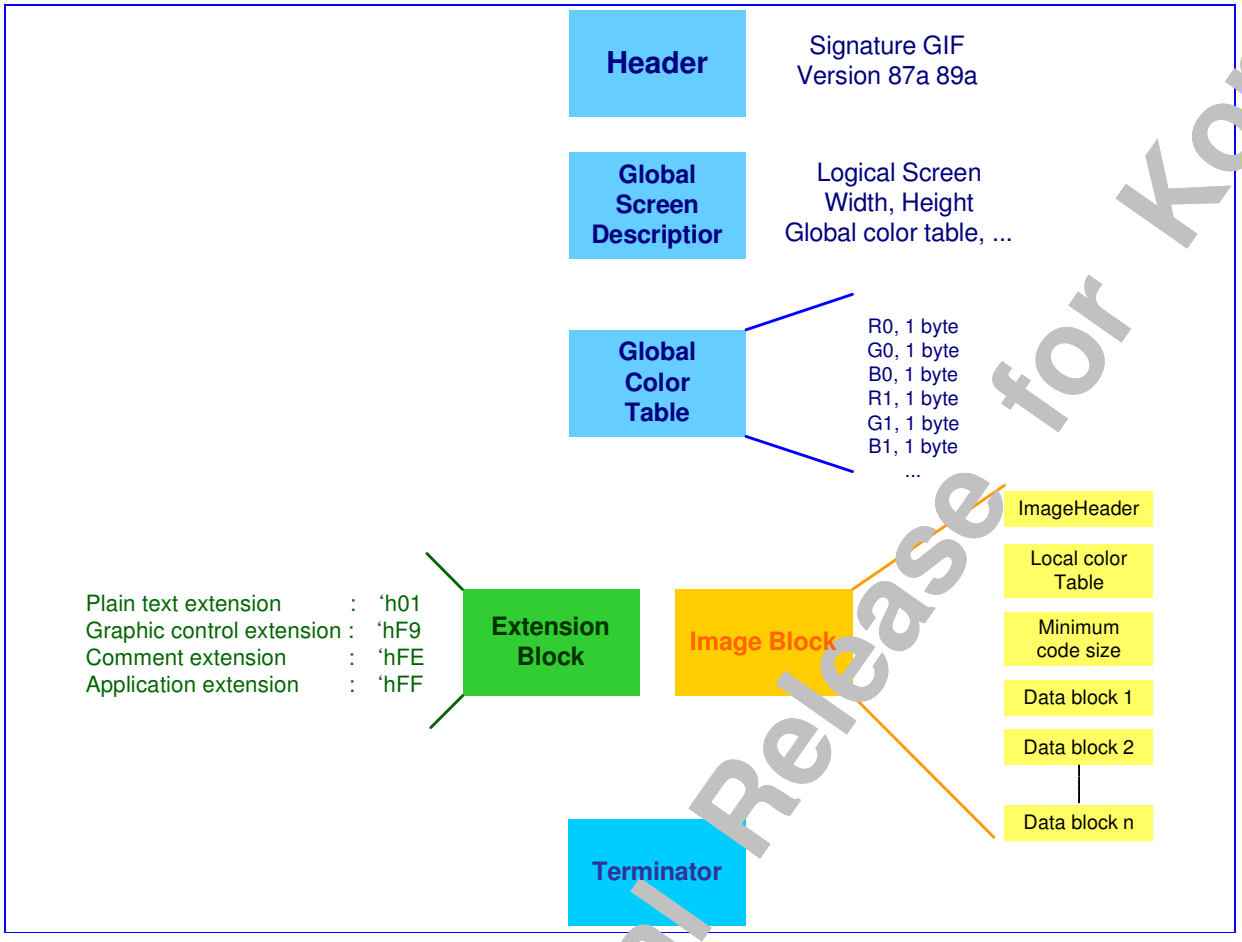

Figure 29 GIF file structure

6.12.2 Register Definitions

GIFDEC+0000h Input File Start Address INFILE_START_ADDR

Bit	31	30	29	28	27	26	25	24	23	22	21	20	19	18	17	16
Name	INFILE_START_ADDR[31:16]															
Type	R/W															
Reset	0															
Bit	15	14	13	12	11	10	9	8	7	6	5	4	3	2	1	0
Name	INFILE_START_ADDR[15:0]															
Type	R/W															
Reset	0															

INFILE_START_ADDR The input file starting address. GIF decoder gets decompression data from this address. The address does not need to be word aligned.

GIFDEC+0004h Input File count INFILE_COUNT

Bit	31	30	29	28	27	26	25	24	23	22	21	20	19	18	17	16
Name	INFILE_COUNT31:16]															
Type	R/W															
Reset	0															

MTK Confidential Release for Konka

Bit	15	14	13	12	11	10	9	8	7	6	5	4	3	2	1	0
Name	INFILE_COUNT15:0]															
Type	R/W															
Reset	0															

INFILE_COUNT GIF decoder supports pause-resume mechanism, i.e., gif decoder would stop decompressing when input file is empty, and wait for notice from software. Input file count is assigned for this issue. When gif decoder encounters infile count, it will stop and indicate by interrupt.

GIFDEC+0008h Color Table Start Address CT_START_ADDR

Bit	31	30	29	28	27	26	25	24	23	22	21	20	19	18	17	16
Name	CT_START_ADDR[31:16]															
Type	R/W															
Reset	0															
Bit	15	14	13	12	11	10	9	8	7	6	5	4	3	2	1	0
Name	CT_START_ADDR [15:0]															
Type	R/W															
Reset	0															

CT_START_ADDR The color table starting address. It needs to be word aligned, and each palette entry is one word.

GIFDEC+000Ch Color Table End Address CT_END_ADDR

Bit	31	30	29	28	27	26	25	24	23	22	21	20	19	18	17	16
Name	CT_END_ADDR[31:16]															
Type	R/W															
Reset	0															
Bit	15	14	13	12	11	10	9	8	7	6	5	4	3	2	1	0
Name	CT_END_ADDR[15:0]															
Type	R/W															
Reset	0															

CT_END_ADDR The color table end address. It needs to be word aligned.

GIFDEC+0010h LZW Decompression Tree Start Address TREE_START_ADDR

Bit	31	30	29	28	27	26	25	24	23	22	21	20	19	18	17	16
Name	TREE_START_ADDR[31:16]															
Type	R/W															
Reset	0															
Bit	15	14	13	12	11	10	9	8	7	6	5	4	3	2	1	0
Name	TREE_START_ADDR[15:0]															
Type	R/W															
Reset	0															

TREE_START_ADDR The LZW decompressing tree starting address. This tree, or called ‘dictionary’, is essential for LZW decompression. It needs to be word aligned.

GIFDEC+0014h LZW Decompression Tree END Address TREE_END_ADDR

Bit	31	30	29	28	27	26	25	24	23	22	21	20	19	18	17	16
Name	TREE_END_ADDR[31:16]															
Type	R/W															
Reset	0															
Bit	15	14	13	12	11	10	9	8	7	6	5	4	3	2	1	0
Name	TREE_END_ADDR[15:0]															

MTK Confidential Release for Konka

Type	R/W
Reset	0

TREE_END_ADDR The LZW decompressing tree end address. The end address is set to prevent gif decoder from writing the wrong memory sections. When this happens, gif decoder would stop and generates an interrupt to inform software. It needs to be word aligned.

GIFDEC+0018h LZW Decode Stack Start Address STK_START_ADDR

Bit	31	30	29	28	27	26	25	24	23	22	21	20	19	18	17	16
Name	STK_START_ADDR[31:16]															
Type	R/W															
Reset	0															
Bit	15	14	13	12	11	10	9	8	7	6	5	4	3	2	1	0
Name	STK_START_ADDR[15:0]															
Type	R/W															
Reset	0															

STK_START_ADDR The stack starting address. The stack is for LZW decompression usage. It needs word aligned.

GIFDEC+001Ch LZW Decode Stack End Address STK_END_ADDR

Bit	31	30	29	28	27	26	25	24	23	22	21	20	19	18	17	16
Name	STK_END_ADDR[31:16]															
Type	R/W															
Reset	0															
Bit	15	14	13	12	11	10	9	8	7	6	5	4	3	2	1	0
Name	STK_END_ADDR[15:0]															
Type	R/W															
Reset	0															

STK_END_ADDR The stack end address. The end address is set to prevent gif decoder from writing the wrong memory sections. When this happens, gif decoder would stop and generates an interrupt to inform software. It needs to be word aligned.

GIFDEC+0020h Output File Start Address OUTFILE_START_ADDR

Bit	31	30	29	28	27	26	25	24	23	22	21	20	19	18	17	16
Name	OUTFILE_START_ADDR[31:16]															
Type	R/W															
Reset	0															
Bit	15	14	13	12	11	10	9	8	7	6	5	4	3	2	1	0
Name	OUTFILE_START_ADDR[15:0]															
Type	R/W															
Reset	0															

OUTFILE_START_ADDR Output file start address. It needs word aligned.

GIFDEC+0024h Output File End Address OUTFILE_END_ADDR

Bit	31	30	29	28	27	26	25	24	23	22	21	20	19	18	17	16
Name	OUTFILE_END_ADDR[31:16]															
Type	R/W															
Reset	0															
Bit	15	14	13	12	11	10	9	8	7	6	5	4	3	2	1	0
Name	OUTFILE_END_ADDR[15:0]															

MTK Confidential Release for Konka

Type	R/W
Reset	0

OUTFILE_END_ADDR Output file end address. The end address is set to prevent gif decoder from writing the wrong memory sections. When this happens, gif decoder would stop and generates an interrupt to inform software. It needs to be word aligned.

GIFDEC+0028h GIF Decompression Enable DEC_EN

Bit	31	30	29	28	27	26	25	24	23	22	21	20	19	18	17	16
Name																
Type																
Reset																
Bit	15	14	13	12	11	10	9	8	7	6	5	4	3	2	1	0
Name																DEC_EN
Type																R/W
Reset																0

DEC_EN GIF decoder enable signal. And it will de-asserted when decompression finishes.

GIFDEC+002Ch GIF File Boundary BOUNDARY

Bit	31	30	29	28	27	26	25	24	23	22	21	20	19	18	17	16
Name	FILE_BOUNDAARY[31:16]															
Type	R															
Reset	0															
Bit	15	14	13	12	11	10	9	8	7	6	5	4	3	2	1	0
Name	FILE_BOUNDAARY[15:0]															
Type	R															
Reset	0															

BOUNDARY Report the file boundary that gif decoder just fetched.

GIFDEC+0030h LZW Min Code Size MIN_CODE_SIZE

Bit	31	30	29	28	27	26	25	24	23	22	21	20	19	18	17	16
Name																
Type																
Reset																
Bit	15	14	13	12	11	10	9	8	7	6	5	4	3	2	1	0
Name													MIN_CODE_SIZE			
Type													R/W			
Reset													0			

MIN_CODE_SIZE GIF min code size for LZW decompression. Reasonable value is 2-11.

GIFDEC+0034h Interlace Control Register INTERLACE_CTRL

Bit	31	30	29	28	27	26	25	24	23	22	21	20	19	18	17	16
Name																
Type																
Reset																
Bit	15	14	13	12	11	10	9	8	7	6	5	4	3	2	1	0
Name																INTERLACE

MTK Confidential Release for Konka

Type																R/W
Reset																0

INTERLACE Interlace enable for GIF decoder.

0 Non-interlaced

1 Interlaced

GIFDEC+0038h Image width and height register IMG_WIDTH_HEIGHT

Bit	31	30	29	28	27	26	25	24	23	22	21	20	19	18	17	16
Name	IMG_WIDTH[15:0]															
Type	R/W															
Reset	0															
Bit	15	14	13	12	11	10	9	8	7	6	5	4	3	2	1	0
Name	IMG_HEIGHT[15:0]															
Type	R/W															
Reset	0															

IMG_WIDTH Image width.

IMG_HEIGHT Image height.

GIFDEC+003Ch Resize control register RESIZE_CTRL

Bit	31	30	29	28	27	26	25	24	23	22	21	20	19	18	17	16
Name																
Type																
Reset																
Bit	15	14	13	12	11	10	9	8	7	6	5	4	3	2	1	0
Name							RESIZE_H_RATIO				RESIZE_W_RATIO					RESIZE_EN
Type							R/W				R/W					R/W
Reset							0				0					0

Since input file for gif decoder might be an interlaced file, the gif decoder cannot perform decompress and resize by resizer at the same time. Hence, there needs a built-in resizer in gif decoder. There is a drop line and drop pixel sizing down resizer in gif decoder.

RESIZE_EN Enable resize on the fly

0: disable

1: enable

RESIZE_W_RATIO Resize ratio in width

0: no resize

1: ½

2: ¼

3: 1/8

4: 1/16

5: 1/32

6: 1/64

7: 1/128

8: 1/256

9: 1/512

10: 1/1024

11: 1/2048

MTK Confidential Release for Konka

12: 1/4096
13: 1/8192
14: 1/16384
15: 1/32768

RESIZE_H_RATIO Resize ratio in height

0: no resize
1: ½
2: ¼
3: 1/8
4: 1/16
5: 1/32
6: 1/64
7: 1/128
8: 1/256
9: 1/512
10: 1/1024
11: 1/2048
12: 1/4096
13: 1/8192
14: 1/16384
15: 1/32768

GIFDEC+0040h Transparent Control Register TRANS_CTRL

Bit	31	30	29	28	27	26	25	24	23	22	21	20	19	18	17	16
Name																
Type																
Reset																
Bit	15	14	13	12	11	10	9	8	7	6	5	4	3	2	1	0
Name							TRANS_CL_KEY								TRANS_TPYE	TRANS_EN
Type							R/W								R/W	R/W
Reset							0								0	0

Since input file for gif decoder might include transparent color key, gif decoder would handle transparent files according to setting as following.

TRANS_EN Transparent enable.

0: disable transparent
1: enable transparent

TRANS_TYPE Transparent handling method.

0: replace transparent color as background color.
1: no output when encounter transparent color.

TRANS_CL_KEY Transparent color key.

GIFDEC+0044h Background Color BG_COLOR

Bit	31	30	29	28	27	26	25	24	23	22	21	20	19	18	17	16
Name									BG_COLOR_B							
Type									R/W							
Reset									0							

MTK Confidential Release for Konka

Bit	15	14	13	12	11	10	9	8	7	6	5	4	3	2	1	0
Name	BG_COLOR_G								BG_COLOR_R							
Type	R/W								R/W							
Reset	0								0							

BG_COLOR_R Background R for transparent output.
BG_COLOR_G Background G for transparent output.
BG_COLOR_B Background B for transparent output.

GIFDEC+004Ch LCD width and height register LCD_WH

Bit	31	30	29	28	27	26	25	24	23	22	21	20	19	18	17	16
Name	LCD_W															
Type	R/W															
Reset	0															
Bit	15	14	13	12	11	10	9	8	7	6	5	4	3	2	1	0
Name	LCD_H															
Type	R/W															
Reset	0															

To speed up gif display and reduce memory usage, gif decoder supports clipping and pitching function. To support clipping and pitching, LCD width and height are essential for gif decoder.

LCD_W LCD width
LCD_H LCD height

GIFDEC+0050h Clipping window XY register CLIP_XY

Bit	31	30	29	28	27	26	25	24	23	22	21	20	19	18	17	16
Name	CLIP_X															
Type	R/W															
Reset	0															
Bit	15	14	13	12	11	10	9	8	7	6	5	4	3	2	1	0
Name	CLIP_Y															
Type	R/W															
Reset	0															

To speed up gif display and reduce memory usage, gif decoder supports clipping and clipping function. To support clipping and pitching, clipping window-starting point is necessary for gif decoder.

CLIP_X CLIP_X[15] sign bit: 0: positive 1: negative
CLIP_X[14:0] coordinate X for clipping window
CLIP_Y CLIP_Y[15] sign bit: 0: positive 1: negative
CLIP_Y[14:0] coordinate Y for clipping window

GIFDEC+0054h Clipping window width and height register CLIP_WH

Bit	31	30	29	28	27	26	25	24	23	22	21	20	19	18	17	16
Name	CLIP_W															
Type	R/W															
Reset	0															
Bit	15	14	13	12	11	10	9	8	7	6	5	4	3	2	1	0
Name	CLIP_H															
Type	R/W															
Reset	0															

MTK Confidential Release for Konka

To speed up gif display and reduce memory usage, gif decoder supports clipping and clipping function. To support clipping and pitching, clipping window dimension is necessary for gif decoder.

CLIP_W Clipping window width

CLIP_H Clipping window height

GIFDEC+0058h Image XY IMG_XY

Bit	31	30	29	28	27	26	25	24	23	22	21	20	19	18	17	16
Name	IMG_X															
Type	R/W															
Reset	0															
Bit	15	14	13	12	11	10	9	8	7	6	5	4	3	2	1	0
Name	IMG_Y															
Type	R/W															
Reset	0															

To speed up gif display and reduce memory usage, gif decoder supports clipping and clipping function. To support clipping and pitching, image-starting point is necessary for gif decoder.

IMG_X IMG_X[15] sign bit: 0: positive 1: negative
IMG_X[14:0] X for image logic window

IMG_Y IMG_Y[15] sign bit: 0: positive 1: negative
IMG_Y[14:0] Y for image logic window

GIFDEC+005Ch Image offset XY IMG_OFFSET_XY

Bit	31	30	29	28	27	26	25	24	23	22	21	20	19	18	17	16
Name	IMG_OFFSET_X															
Type	R/W															
Reset	0															
Bit	15	14	13	12	11	10	9	8	7	6	5	4	3	2	1	0
Name	IMG_OFFSET_Y															
Type	R/W															
Reset	0															

To speed up gif display and reduce memory usage, gif decoder supports clipping and clipping function. To support clipping and pitching, image starting offset is necessary for gif decoder.

IMG_OFFSET_X IMG_OFFSET_X[15:0] offset X for image logic window

IMG_OFFSET_Y IMG_OFFSET_Y[15:0] offset Y for image logic window

GIFDEC+0060h Interrupt Enable Register IRQ_EN

Bit	31	30	29	28	27	26	25	24	23	22	21	20	19	18	17	16
Name																
Type																
Reset																
Bit	15	14	13	12	11	10	9	8	7	6	5	4	3	2	1	0
Name										TREE ERROR	TREE FULL	STACKFULL	PIXEL	OUTFULL	INEMPTY	IMG_CMP
Type										R/W	R/W	R/W	R/W	R/W	R/W	R/W
Reset										0	0	0	0	0	0	0

IMG_CMP Image decompressed complete interrupt enable.

INEMPTY Input file empty interrupt enable.

MTK Confidential Release for Konka

OUTFULL Output file full interrupt enable.
PIXEL Pixel output num error interrupt enable.
STACKFULL Stack output full interrupt enable.
TREEFULL Tree full interrupt enable.
TREEERROR Decompression error interrupt enable.

GIFDEC+0064h Interrupt Status IRQ_STATUS

Bit	31	30	29	28	27	26	25	24	23	22	21	20	19	18	17	16
Name																
Type																
Reset																
Bit	15	14	13	12	11	10	9	8	7	6	5	4	3	2	1	0
Name										TREEERROR	TREEFULL	STACKFULL	PIXEL	OUTFULL	INRMPTY	IMG_CMP
Type										R	R	R	R	R	R	R
Reset										0	0	0	0	0	0	0

IMG_CMP Image decompressed complete interrupt.
INEMPTY Input file empty interrupt.
OUTFULL Output file full interrupt.
PIXEL Pixel output num errors interrupt.
STACKFULL Stack output full interrupt.
TREEFULL Tree full interrupt.
TREEERROR Decompression error interrupt.

GIFDEC+0068h GIF Reset RST

Bit	31	30	29	28	27	26	25	24	23	22	21	20	19	18	17	16
Name																
Type																
Reset																
Bit	15	14	13	12	11	10	9	8	7	6	5	4	3	2	1	0
Name																RST
Type																R/W
Reset																0

RST Reset for GIF decoder. Write 0x1201, then hardware will reset itself.

GIFDEC+006Ch Color Output Format OUT_FORMAT

Bit	31	30	29	28	27	26	25	24	23	22	21	20	19	18	17	16
Name																
Type																
Reset																
Bit	15	14	13	12	11	10	9	8	7	6	5	4	3	2	1	0
Name				PACK_INDEX_DEPTH				PACK_INDEX					PARTIAL		OUT_FORMAT	
Type				R/W				R/W							R/W	
Reset				‘b1000				0							0	

OUT_FORMAT To support different applications, gif decoder output data as rgb565, rgb888 and color index mode.
2’b00: RGB565

MTK Confidential Release for Konka

2'b01: RGB888

2'b10: Index

PARTIAL To reduce memory usage, gif decoder support pause-resume mechanism when input file is empty according setting as blow.

1: enable partial input, i.e. pause-resume mechanism.

0: disable partial input, i.e. pause-resume mechanism.

PACK_INDEX To reduce memory usage, gif decoder support pack index when output format is Index mode.

1: enable pack index

0: disable pack index

PACK_INDEX_DEPTH pack index depth, 1, 2, 4, 8

GIFDEC+0074h Pack width resize PACK_RESIZE_W

Bit	31	30	29	28	27	26	25	24	23	22	21	20	19	18	17	16
Name			PACK_RESIZE_W_D										PACK_RESIZE_W_N [9:6]			
Type			R/W										R/W			
Reset			0										0			
Bit	15	14	13	12	11	10	9	8	7	6	5	4	3	2	1	0
Name	PACK_RESIZE_W_N [5:0]						PACK_RESIZE_W_Q									
Type	R/W						R/W									
Reset	0						0									

When in packing index mode, the resizer is different. The resize width ratio doesn't need to be an integer. Resize ratio = PACK_RESIZE_W_Q + (PACK_RESIZE_W_N / PACK_RESIZE_W_D)

GIFDEC+0078h Pack height resize PACK_RESIZE_H

Bit	31	30	29	28	27	26	25	24	23	22	21	20	19	18	17	16
Name			PACK_RESIZE_H_D										PACK_RESIZE_H_N [9:6]			
Type			R/W										R/W			
Reset			0										0			
Bit	15	14	13	12	11	10	9	8	7	6	5	4	3	2	1	0
Name	PACK_RESIZE_H_N [5:0]						PACK_RESIZE_H_Q									
Type	R/W						R/W									
Reset	0						0									

When in packing index mode, the resizer is different. The resize height ratio doesn't need to be an integer. Resize ratio = PACK_RESIZE_H_Q + (PACK_RESIZE_H_N / PACK_RESIZE_H_D)

6.13 PNG Decoder

6.13.1 General Description

PNG Decoder is aimed to decode PNG pictures. This hardware-assisted png decoding alleviates the software from computation-intensive jobs, and frees the MCU for other jobs. For a handheld device with multimedia functionality, this kind of hardware acceleration is very beneficial for MCU off loading and achieving high performance. The PNG decoder is aimed to do ZLIB decompression, on-the-fly resizing down, clipping and pitching; header parsing is performed by software.

MTK Confidential Release for Konka

6.13.2 Register Definitions

PNGDEC+0000h Input File Start Address INFILE_START_ADDR

Bit	31	30	29	28	27	26	25	24	23	22	21	20	19	18	17	16
Name	INFILE_START_ADDR[31:16]															
Type	R/W															
Reset	0															
Bit	15	14	13	12	11	10	9	8	7	6	5	4	3	2	1	0
Name	INFILE_START_ADDR[15:0]															
Type	R/W															
Reset	0															

INFILE_START_ADDR The input file starting address; PNG decoder would get decompression data from this address. The address hasn't to be word aligned.

PNGDEC+0004h Input File count INFILE_COUNT

Bit	31	30	29	28	27	26	25	24	23	22	21	20	19	18	17	16
Name	INFILE_COUNT31:16]															
Type	R/W															
Reset	0															
Bit	15	14	13	12	11	10	9	8	7	6	5	4	3	2	1	0
Name	INFILE_COUNT15:0]															
Type	R/W															
Reset	0															

INFILE_COUNT PNG decoder supports pause-resume mechanism, i.e., png decoder would stop decompressing when input file is empty, and wait for notice from software. Input file count is assigned for this issue. When png decoder encounters infile count, it will stop and indicate by interrupt.

PNGDEC+0008h Color Table Start Address CT_START_ADDR

Bit	31	30	29	28	27	26	25	24	23	22	21	20	19	18	17	16
Name	CT_START_ADDR[31:16]															
Type	R/W															
Reset	0															
Bit	15	14	13	12	11	10	9	8	7	6	5	4	3	2	1	0
Name	CT_START_ADDR [15:0]															
Type	R/W															
Reset	0															

CT_START_ADDR The color table starting address. It needs to be word aligned. And each palette entry is one word.

PNGDEC+0010h Output File Start Address OUT_START_ADDR

Bit	31	30	29	28	27	26	25	24	23	22	21	20	19	18	17	16
Name	OUT_START_ADDR[31:16]															
Type	R/W															
Reset	0															
Bit	15	14	13	12	11	10	9	8	7	6	5	4	3	2	1	0
Name	OUT_START_ADDR[15:0]															
Type	R/W															
Reset	0															

MTK Confidential Release for Konka

OUT_START_ADDR Output file start address. It needs to be word aligned.

PNGDEC+0014h Output file End Address OUT_END_ADDR

Bit	31	30	29	28	27	26	25	24	23	22	21	20	19	18	17	16
Name	OUT_END_ADDR[31:16]															
Type	R/W															
Reset	0															
Bit	15	14	13	12	11	10	9	8	7	6	5	4	3	2	1	0
Name	OUT_END_ADDR[15:0]															
Type	R/W															
Reset	0															

OUT_END_ADDR Output file end address. It needs to be word aligned.

PNGDEC+0018h Huffman HCLEN Table Start Address HCELN_START_ADDR

Bit	31	30	29	28	27	26	25	24	23	22	21	20	19	18	17	16
Name	HCLEN_START_ADDR[31:16]															
Type	R/W															
Reset	0															
Bit	15	14	13	12	11	10	9	8	7	6	5	4	3	2	1	0
Name	HCLEN_START_ADDR[15:0]															
Type	R/W															
Reset	0															

HCLEN_START_ADDR Huffman code length code table starting address. It needs to be word aligned.

PNGDEC+0020h Huffman code length Start Address LEN_START_ADDR

Bit	31	30	29	28	27	26	25	24	23	22	21	20	19	18	17	16
Name	LEN_START_ADDR[31:16]															
Type	R/W															
Reset	0															
Bit	15	14	13	12	11	10	9	8	7	6	5	4	3	2	1	0
Name	LEN_START_ADDR[15:0]															
Type	R/W															
Reset	0															

LEN_START_ADDR Huffman code length starting address. It needs to be word aligned.

PNGDEC+0028h Huffman HLIT Table Start Address HLIT_START_ADDR

Bit	31	30	29	28	27	26	25	24	23	22	21	20	19	18	17	16
Name	HLIT_START_ADDR[31:16]															
Type	R/W															
Reset	0															
Bit	15	14	13	12	11	10	9	8	7	6	5	4	3	2	1	0
Name	HLIT_START_ADDR[15:0]															
Type	R/W															
Reset	0															

HLIT_START_ADDE Huffman literal code table starting address. It needs to be word aligned.

MTK Confidential Release for Konka

PNGDEC+0030h Huffman HDIST Table Start Address HDIST_START_ADDR

Bit	31	30	29	28	27	26	25	24	23	22	21	20	19	18	17	16
Name	HDIST_START_ADDR[31:16]															
Type	R/W															
Reset	0															
Bit	15	14	13	12	11	10	9	8	7	6	5	4	3	2	1	0
Name	HDIST_START_ADDR[15:0]															
Type	R/W															
Reset	0															

HDIST_START_ADDR Huffman distance code table starting address. It needs to be word aligned.

PNGDEC+0038h Line Buffer0 Start Address BUFF0_START_ADDR

Bit	31	30	29	28	27	26	25	24	23	22	21	20	19	18	17	16
Name	BUFF0_START_ADDR[31:16]															
Type	R/W															
Reset	0															
Bit	15	14	13	12	11	10	9	8	7	6	5	4	3	2	1	0
Name	BUFF0_START_ADDR[15:0]															
Type	R/W															
Reset	0															

BUFF0_START_ADDR Line buffer0 starting address (for de-filtering). It needs to be word aligned.

PNGDEC+0040h Line Buffer1 Start Address BUFF1_START_ADDR

Bit	31	30	29	28	27	26	25	24	23	22	21	20	19	18	17	16
Name	BUFF1_START_ADDR[31:16]															
Type	R/W															
Reset	0															
Bit	15	14	13	12	11	10	9	8	7	6	5	4	3	2	1	0
Name	BUFF1_START_ADDR[15:0]															
Type	R/W															
Reset	0															

BUFF1_START_ADDR Line buffer1 starting address (for de-filtering). It needs to be word aligned.

PNGDEC+0048h LZ77 Buffer Start Address LZ77_START_ADDR

Bit	31	30	29	28	27	26	25	24	23	22	21	20	19	18	17	16
Name	LZ77_START_ADDR[31:16]															
Type	R/W															
Reset	0															
Bit	15	14	13	12	11	10	9	8	7	6	5	4	3	2	1	0
Name	LZ77_START_ADDR[15:0]															
Type	R/W															
Reset	0															

LZ77_START_ADDR LZ77 buffer starting address. It needs to be word aligned.

PNGDEC+0050h Color_Type COLOR_TYPE

Bit	31	30	29	28	27	26	25	24	23	22	21	20	19	18	17	16
Name																

MTK Confidential Release for Konka

Type																
Reset																
Bit	15	14	13	12	11	10	9	8	7	6	5	4	3	2	1	0
Name									COLOR_DEPTH[4:0]					COLOR_TYPE[2:0]		
Type									R/W					R/W		
Reset									0					0		

COLOR_TYPE Indicate color type of PNG image.

0: greyscale

2: true color

3: palette

4: greyscale with alpha

6: true color with alpha

COLOR_DEPTH Indicate color bit depth of PNG image.

PNGDEC+0054h IMG_WIDTH_HEIGHT IMG_WIDTH_HEIGHT

Bit	31	30	29	28	27	26	25	24	23	22	21	20	19	18	17	16
Name	IMG_WIDTH[15:0]															
Type	R/W															
Reset	0															
Bit	15	14	13	12	11	10	9	8	7	6	5	4	3	2	1	0
Name	IMG_HEIGHT[15:0]															
Type	R/W															
Reset	0															

IMG_WIDTH Image width.

IMG_HEIGHT Image height.

PNGDEC+0058h Decode Control Register DECODE_CTRL

Bit	31	30	29	28	27	26	25	24	23	22	21	20	19	18	17	16
Name																
Type																
Reset																
Bit	15	14	13	12	11	10	9	8	7	6	5	4	3	2	1	0
Name																DECODE_EN
Type																R/W
Reset																0

DECODE_EN Decode enable signal.

PNGDEC+005Ch Interlace Enable Register INTERLACE_EN

Bit	31	30	29	28	27	26	25	24	23	22	21	20	19	18	17	16
Name																
Type																
Reset																
Bit	15	14	13	12	11	10	9	8	7	6	5	4	3	2	1	0
Name																INTERLACE_EN
Type																R/W
Reset																0

MTK Confidential Release for Konka

INTERLACE_EN Interlace enable signal.

PNGDEC+0060h ADLER_ADDR ALER_ADDR

Bit	31	30	29	28	27	26	25	24	23	22	21	20	19	18	17	16
Name	ADLER[31:16]															
Type	R/W															
Reset	0															
Bit	15	14	13	12	11	10	9	8	7	6	5	4	3	2	1	0
Name	ADLER[15:0]															
Type	R/W															
Reset	0															

ADLER Adler checksum data report.

PNGDEC+0068h LCD Width Height Register LCD_WH

Bit	31	30	29	28	27	26	25	24	23	22	21	20	19	18	17	16
Name	LCD_W[15:0]															
Type	R/W															
Reset	0															
Bit	15	14	13	12	11	10	9	8	7	6	5	4	3	2	1	0
Name	LCD_H[15:0]															
Type	R/W															
Reset	0															

LCD_W LCD width.

LCD_H LCD height.

PNGDEC+006Ch Clipping XY CLIP_XY

Bit	31	30	29	28	27	26	25	24	23	22	21	20	19	18	17	16
Name	CLIP_X															
Type	R/W															
Reset	0															
Bit	15	14	13	12	11	10	9	8	7	6	5	4	3	2	1	0
Name	CLIP_Y															
Type	R/W															
Reset	0															

CLIP_X CLIP_X[15] sign bit: 0: positive 1: negative
CLIP_X[14:0] X for clipping window

CLIP_Y CLIP_Y[15] sign bit: 0: positive 1: negative
CLIP_Y[14:0] Y for clipping window

PNGDEC+0070h Clipping window width and height register CLIP_WH

Bit	31	30	29	28	27	26	25	24	23	22	21	20	19	18	17	16
Name	CLIP_W															
Type	R/W															
Reset	0															
Bit	15	14	13	12	11	10	9	8	7	6	5	4	3	2	1	0
Name	CLIP_H															
Type	R/W															
Reset	0															

MTK Confidential Release for Konka

CLIP_W Clipping window width

CLIP_H Clipping window height

PNGDEC+0074h Image XY IMG_XY

Bit	31	30	29	28	27	26	25	24	23	22	21	20	19	18	17	16
Name	IMG_X															
Type	R/W															
Reset	0															
Bit	15	14	13	12	11	10	9	8	7	6	5	4	3	2	1	0
Name	IMG_Y															
Type	R/W															
Reset	0															

IMG_X IMG_X[15] sign bit: 0: positive 1: negative
IMG_X[14:0] X for image logic window

IMG_Y IMG_Y[15] sign bit: 0: positive 1: negative
IMG_Y[14:0] Y for image logic window

PNGDEC+0078h PNG Reset RST

Bit	31	30	29	28	27	26	25	24	23	22	21	20	19	18	17	16
Name																
Type																
Reset																
Bit	15	14	13	12	11	10	9	8	7	6	5	4	3	2	1	0
Name																RST
Type																R/W
Reset																0

RST Reset for PNG decoder. Write 0x1201, then hardware will reset itself.

PNGDEC+007Ch Color Output Format OUT_FORMAT

Bit	31	30	29	28	27	26	25	24	23	22	21	20	19	18	17	16
Name																
Type																
Reset																
Bit	15	14	13	12	11	10	9	8	7	6	5	4	3	2	1	0
Name											IPP_EN	CLIP_PITCH_EN	PARTIAL_IRQ_CTRL	PARTIAL	OUT_FORMAT	
Type											R/W	R/W	R/W	R/W	R/W	
Reset											0	0	0	0	0	

OUT_FORMAT Output color format
2'b00: RGB565
2'b01: RGB888
2'b10: ARGB4444
2'b11: ARGB8888

PARTIAL 1: enable partial input
0: disable partial input

PARTIAL_IRQ_CTRL 1: The input file empty irq and block count end irq will be sent out according to which case is encountered first. If the two cases are encountered at the same time, both irqs will be sent out.

MTK Confidential Release for Konka

0: Both input file empty irq and block count end irq will be sent out if the left byte number of the input file and block are smaller than 4 bytes.

CLIP_PITCH_EN Clip end pitch enable

IPP_EN Enable ipp and png interface

PNGDEC+0080h Resize Register RESIZE

Bit	31	30	29	28	27	26	25	24	23	22	21	20	19	18	17	16
Name																
Type																
Reset																
Bit	15	14	13	12	11	10	9	8	7	6	5	4	3	2	1	0
Name					RESIZE_W_RATIO				RESIZE_H_RATIO							RESIZE_EN
Type					R/W				R/W							R/W
Reset					0				0							0

RESIZE_EN Resize on the fly enable

0: disable

1: enable

RESIZE_W_RATIO Resize ratio in width

0: no resize

1: ½

2: ¼

3: 1/8

4: 1/16

5: 1/32

6: 1/64

7: 1/128

8: 1/256

9: 1/512

10: 1/1024

11: 1/2048

12: 1/4096

13: 1/8192

14: 1/16384

15: 1/32768

RESIZE_H_RATIO Resize ratio in height

0: no resize

1: ½

2: ¼

3: 1/8

4: 1/16

5: 1/32

6: 1/64

7: 1/128

8: 1/256

9: 1/512

10: 1/1024

11: 1/2048

MTK Confidential Release for Konka

12: 1/4096
13: 1/8192
14: 1/16384
15: 1/32768

PNGDEC+0084h Resume Register RESUME

Bit	31	30	29	28	27	26	25	24	23	22	21	20	19	18	17	16
Name																
Type																
Reset																
Bit	15	14	13	12	11	10	9	8	7	6	5	4	3	2	1	0
Name																RESUME
Type																R/W
Reset																0

RESUME **Resume when infile empty or block count end**

PNGDEC+0088h Interrupt Enable Register IRQ_EN

Bit	31	30	29	28	27	26	25	24	23	22	21	20	19	18	17	16
Name																
Type																
Reset																
Bit	15	14	13	12	11	10	9	8	7	6	5	4	3	2	1	0
Name											OVER_OUTPUT_ERROR	FILTER_BYTE_ERROR	COLOR_INDEX_ERROR	BLOCK_CNT	INEMPTY	IMG_CMP
Type											R/W	R/W	R/W	R/W	R/W	R/W
Reset											0	0	0	0	0	0

IMG_CMP Image decompressed complete irq enable
INEMPTY Input file empty
BLOCK_CNT Block count end
COLOR_INDEX_ERROR output index error
FILTER_BYTE_ERROR decoder decode an error filter type
OVER_OUTPUT_ERROR output over out_end_addr

PNGDEC+008Ch Interrupt Status IRQ_STATUS

Bit	31	30	29	28	27	26	25	24	23	22	21	20	19	18	17	16
Name																
Type																
Reset																
Bit	15	14	13	12	11	10	9	8	7	6	5	4	3	2	1	0
Name											OVER_OUTPUT_ERROR	FILTER_BYTE_ERROR	COLOR_INDEX_ERROR	BLOCK_CNT	INRMPTY	IMG_CMP
Type											R	R	R	R	R	R
Reset											0	0	0	0	0	0

MTK Confidential Release for Konka

IMG_CMP Image decompressed complete irq.
INEMPTY Input file empty irq
BLOCK_CNT Block count end irq
COLOR_INDEX_ERROR output index error
FILTER_BYTE_ERROR decoder decode an error filter type
OVER_OUTPUT_ERROR output over out_end_addr

PNGDEC+0090h IDAT COUNT Register IDAT_COUNT

Bit	31	30	29	28	27	26	25	24	23	22	21	20	19	18	17	16
Name	IDAT_COUNT[31:16]															
Type	R/W															
Reset	0															
Bit	15	14	13	12	11	10	9	8	7	6	5	4	3	2	1	0
Name	IDAT_COUNT[15:0]															
Type	R/W															
Reset	0															

IDAT_COUNT The length (byte number) of the IDAT.

PNGDEC+0094h Chunk type CHUNK_TYPE

Bit	31	30	29	28	27	26	25	24	23	22	21	20	19	18	17	16
Name	CHUNK_TYPE															
Type	R/W															
Reset	0															
Bit	15	14	13	12	11	10	9	8	7	6	5	4	3	2	1	0
Name	CHUNK_TYPE															
Type	R/W															
Reset	0															

CHUNK_TYPE **chunk type**

PNGDEC+0098h CRC CRC

Bit	31	30	29	28	27	26	25	24	23	22	21	20	19	18	17	16
Name	CRC															
Type	R															
Reset	0															
Bit	15	14	13	12	11	10	9	8	7	6	5	4	3	2	1	0
Name	CRC															
Type	R															
Reset	0															

CRC **read out the crc result**

PNGDEC+00A0h Transparency table start address TRNS_ADDR

Bit	31	30	29	28	27	26	25	24	23	22	21	20	19	18	17	16
Name	TRNS_ADDR															
Type	R/W															
Reset	0															
Bit	15	14	13	12	11	10	9	8	7	6	5	4	3	2	1	0
Name	TRNS_ADDR															
Type	R/W															

MTK Confidential Release for Konka

Reset	0

TRAN_ADDR transparency table staring address.

PNGDEC+00A4h TRNS CTRL TRNS_CTRL

Bit	31	30	29	28	27	26	25	24	23	22	21	20	19	18	17	16
Name																
Type																
Reset																
Bit	15	14	13	12	11	10	9	8	7	6	5	4	3	2	1	0
Name													TRANS_OUT_SPEC	TRANS_TABLE	TRANS_OUT	TRANS_EN
Type													R/W	R/W	R/W	R/W
Reset													0	0	0	0

TRANS_EN Transparent enable

TRANS_OUT 0: output transparent color as background color

1: no output when transparent

TRANS_TABLE Transparent table exist

TRANS_OUT_SPEC Transparent color key enable

PNGDEC+00A8h Transparency key1 TRNS_KEY1

Bit	31	30	29	28	27	26	25	24	23	22	21	20	19	18	17	16
Name	GREY_KEY															
Type	R/W															
Reset	0															
Bit	15	14	13	12	11	10	9	8	7	6	5	4	3	2	1	0
Name	R_KEY															
Type	R/W															
Reset	0															

GREY_KEY Transparent color key of grayscale image

R_KEY Transparent color key of red component

PNGDEC+00ACh Transparency key2 TRNS_KEY2

Bit	31	30	29	28	27	26	25	24	23	22	21	20	19	18	17	16
Name	G_KEY															
Type	R/W															
Reset	0															
Bit	15	14	13	12	11	10	9	8	7	6	5	4	3	2	1	0
Name	B_KEY															
Type	R/W															
Reset	0															

G_KEY Transparent color key of green component

B_KEY Transparent color key of blue component

PNGDEC+00B0h Background Color BG_COLOR

Bit	31	30	29	28	27	26	25	24	23	22	21	20	19	18	17	16

MTK Confidential Release for Konka

Name	BG_GREY								BG_R							
Type	R/W								R/W							
Reset	0								0							
Bit	15	14	13	12	11	10	9	8	7	6	5	4	3	2	1	0
Name	BG_G								BG_B							
Type	R/W								R							
Reset	0								0							

BG_GREY background color of grayscale image
BG_R background color of red component
BG_G background color of green component
BG_B background color of blue component

PNGDEC+00B4h SPECIAL BLOCK SPEC_BLOCK

Bit	31	30	29	28	27	26	25	24	23	22	21	20	19	18	17	16
Name	SPEC_BLOCK_BYTE3								SPEC_BLOCK_BYTE2							
Type	R/W								R/W							
Reset	0								0							
Bit	15	14	13	12	11	10	9	8	7	6	5	4	3	2	1	0
Name	SPEC_BLOCK_BYTE1								SPEC_BLOCK_BYTE0							
Type	R/W								R/W							
Reset	0								0							

This register is used for the special case when the length of one IDAT is smaller than or equal to 4 bytes. SPEC_BLOCK_BYTEx contains the value of byte x of the IDAT.

SPEC_BLOCK_BYTE0 The byte 0 of the IDAT**SPEC_BLOCK_BYTE1** The byte 1 of the IDAT**SPEC_BLOCK_BYTE2** The byte 2 of the IDAT

SPEC_BLOCK_BYTE3 **The byte 3 of the IDAT**

+00B8h INDEX NUMBER INDEX_NUM

Bit	31	30	29	28	27	26	25	24	23	22	21	20	19	18	17	16
Name								COLOR_NUM								
Type	R/W	R/W	R/W	R/W	R/W	R/W	R/W	R/W								
Reset	0	0	0	0	0	0	0	0								
Bit	15	14	13	12	11	10	9	8	7	6	5	4	3	2	1	0
Name								TRANS_NUM								
Type	R/W	R/W	R/W	R/W	R/W	R/W	R/W	R/W								
Reset	0	0	0	0	0	0	0	0								

COLOR_NUM color entry number
TRANS_NUM transparency entry number

MTK Confidential Release for Konka

6.14 Camera Interface

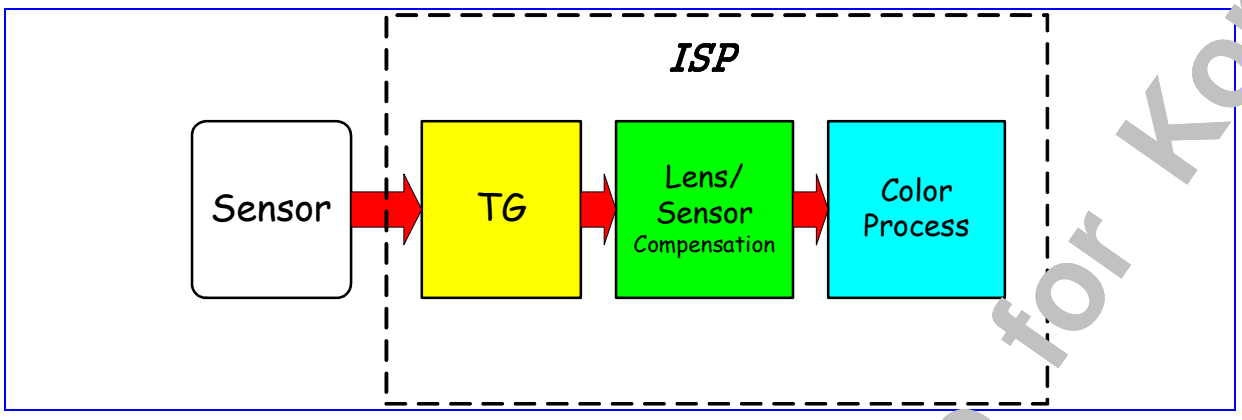

MT6228 incorporates a feature rich image signal processor to connect with a variety of image sensor components. This processor consists of timing generated unit (TG) and lens/sensor compensation unit and image process unit.

Timing generated unit (TG) cooperates with master type image sensor only. That means sensor should send vertical and horizontal signals to TG. TG offers sensor required data clock and receive sensor Bayer pattern raw data by internal auto synchronization or external pixel clock synchronization. The main purpose of TG is to create data clock for master type image sensor and accept vertical/horizontal synchronization signal and sensor data, and then generate grabbed area of raw data or YUV422/RGB565 data to the lens/sensor compensation unit.

Lens/sensor compensation unit generates compensated raw data to the color process unit in Bayer raw data input mode. In YUV422/RGB565 input mode, this stage is bypassed.

Image process unit accepts Bayer pattern raw data or YUV422/RGB565 data that is generated by lens/sensor compensation unit. The output of ISP is YCbCr 888 data format which can be easily encoded by the compress engine (JPEG encoder and MPEG4 encoder). It can be the basic data domain of other data format translation such as R/G/B domain. The ISP is pipelined, and during processing stages ISP hardware can auto extract meaningful information for further AE/AF/AWB calculation. These information are temporary stored on ISP registers or memory and can be read back by MCU.

6.14.1 Register Table

REGISTER ADDRESS	REGISTER NAME	SYNONYM
CAM + 0000h	TG Phase Counter Register	CAM_PHSCNT
CAM + 0004h	Image Sensor Size Configuration Register	CAM_CAMWIN
CAM + 0008h	TG Grab Range Start/End Pixel Configuration Register	CAM_GRABCOL
CAM + 000Ch	TG Grab Range Start/End Line Configuration Register	CAM_GRABROW
CAM + 0010h	CMOS Sensor Mode Configuration Register	CAM_CSMODE
CAM + 0014h	Component Offset Adjustment Register	CAM_RGBOFF
CAM + 0018h	View Finder Mode Control Register	CAM_VFCON
CAM + 001Ch	Camera Module Interrupt Enable Register	CAM_INTEN
CAM + 0020h	Camera Module Interrupt Status Register	CAM_INTSTA
CAM + 0024h	Camera Module Path Config Register	CAM_PATH
CAM + 0028h	Camera Module Input Address Register	CAM_INADDR
CAM + 002Ch	Camera Module Output Address Register	CAM_OUTADDR

MTK Confidential Release for Konka

CAM + 0030h	Preprocessing Control Register 1	CAM_CTRL1
CAM + 0034h	Component R,G, B Gain Control Register 1	CAM_RGBGAIN1
CAM + 0038h	Component R,G, B Gain Control Register 2	CAM_RGBGAIN2
CAM + 003Ch	Histogram Boundary Control Register 1	CAM_HIS0
CAM + 0040h	Histogram Boundary Control Register 2	CAM_HIS1
CAM + 0044h	Preprocessing Control Register 2	CAM_CTRL2
CAM + 0048h	Reserved	Reserved
CAM + 004Ch	Reserved	Reserved
CAM + 0050h	Reserved	Reserved
CAM + 0054h	Reserved	Reserved
CAM + 0058h	ATF Window 1 Register	CAM_AEWIN1
CAM + 005Ch	ATF Window 2 Register	CAM_ AEWIN2
CAM + 0060h	ATF Window 3 Register	CAM_ AEWIN3
CAM + 0064h	ATF Window 4 Register	CAM_ AEWIN4
CAM + 0068h	ATF Window 5 Register	CAM_ AEWIN5
CAM + 006Ch	AWB Window Register	CAM_AWBWIN
CAM + 0070h	Color Processing Stage Control Register	CAM_CPSCON1
CAM + 0074h	Interpolation Register 1	CAM_INTER1
CAM + 0078h	Interpolation Register 2	CAM_INTER2
CAM + 007Ch	Edge Core Register	CAM_EDGCORE
CAM + 0080h	Edge Gain Register 1	CAM_EDGGAIN1
CAM + 0084h	Edge Gain Register 2	CAM_EDGGAIN2
CAM + 0088h	Edge Threshold Register	CAM_EDGTHRE
CAM + 008Ch	Edge Vertical Control Register	CAM_EDGVCON
CAM + 0090h	Axis RGB Gain Register	CAM_AXGAIN
CAM + 0094h	OPD Configuration Register	CAM_OPDCFG
CAM + 0098h	OPD Component Parameter Register	CAM_OPDPAR
CAM + 009Ch	Color Matrix 1 Register	CAM_MATRIX1
CAM + 00A0h	Color Matrix 2 Register	CAM_MATRIX2
CAM + 00A4h	Color Matrix 3 Register	CAM_MATRIX3
CAM + 00A8h	Color Matrix RGB Gain Register	CAM_MTXGAIN
CAM + 00ACh	Color Process Stage Control Register 2	CAM_CPSCON2
CAM + 00B0h	AWB RGB Gain Register	CAM_AWBGAIN
CAM + 00B4h	Gamma RGB Flare Register	CAM_GAMFLRE
CAM + 00B8h	Y Channel Configuration Register	CAM_YCHAN
CAM + 00BCh	UV Channel Configuration Register	CAM_UVCHAN
CAM + 00C0h	Space Convert YUV Register 1	CAM_SCONV1
CAM + 00C4h	Space Convert YUV Register 2	CAM_SCONV2
CAM + 00C8h	Gamma Operation Register 1	CAM_GAMMA1
CAM + 00CCh	Gamma Operation Register 2	CAM_GAMMA2
CAM + 00D0h	Gamma Operation Register 3	CAM_GAMMA3
CAM + 00D4h	OPD Y Result Register	CAM_OPDY

MTK Confidential Release for Konka

CAM + 00D8h	OPD MG Result Register	CAM_OPDMG
CAM + 00DCh	OPD RB Result Register	CAM_OPDRB
CAM + 00E0h	OPD Pixel Counter Register	CAM_OPDCNT
CAM + 00E4h	Reserved	Reserved
CAM + 00E8h	Reserved	Reserved
CAM + 00ECh	Reserved	Reserved
CAM + 00F0h	Reserved	Reserved
CAM + 00F4h	ATF Result 1 Register	CAM_AE5RLT
CAM + 00F8h	ATF Result 2 Register	CAM_AE6RLT
CAM + 00FCh	ATF Result 3 Register	CAM_AE7RLT
CAM + 0100h	ATF Result 4 Register	CAM_AE8RLT
CAM + 0104h	ATF Result 5 Register	CAM_AE9RLT
CAM + 0108h	Cam Histogram Result 1	CAM_HISRLT0
CAM + 010Ch	Cam Histogram Result 2	CAM_HISRLT1
CAM + 0110h	Cam Histogram Result 3	CAM_HISRLT2
CAM + 0114h	Cam Histogram Result 4	CAM_HISRLT3
CAM + 0118h	Cam Histogram Result 5	CAM_HISRLT4
CAM + 011Ch	Low Pass Filter Control Register	CAM_LPFCON
CAM + 0120h	Y Low Pass Filter Control Register	CAM_YLPF
CAM + 0124h	CbCr Low Pass Filter Control Register	CAM_CLPF
CAM + 0128h	Vertical Subsample Control Register	CAM_VSUB
CAM + 012Ch	Horizontal Subsample Control Register	CAM_HSUB
CAM + 0130h	Sensor Gamma R0 Register	CAM_SGAMMAR0
CAM + 0134h	Sensor Gamma R1 Register	CAM_SGAMMAR1
CAM + 0138h	Sensor Gamma R2 Register	CAM_SGAMMAR2
CAM + 013Ch	Sensor Gamma G0 Register	CAM_SGAMMAG0
CAM + 0140h	Sensor Gamma G1 Register	CAM_SGAMMAG1
CAM + 0144h	Sensor Gamma G2 Register	CAM_SGAMMAG2
CAM + 0148h	Sensor Gamma B0 Register	CAM_SGAMMAB0
CAM + 014Ch	Sensor Gamma B1 Register	CAM_SGAMMAB1
CAM + 0150h	Sensor Gamma B2 Register	CAM_SGAMMAB2
CAM + 0154h	Defect Pixel Configuration Register	CAM_DEFECT0
CAM + 0158h	Defect Pixel Table Address Register	CAM_DEFECT1
CAM + 015Ch	Defect Pixel Table Debug Register	CAM_DEFECT2
CAM + 0160h	Reserved	Reserved
CAM + 0164h	Reserved	Reserved
CAM + 0168h	Reserved	Reserved
CAM + 016Ch	Reserved	Reserved
CAM + 0170h	Reserved	Reserved
CAM + 0174h	Reserved	Reserved
CAM + 0178h	Reserved	Reserved
CAM + 017Ch	Reserved	Reserved

MTK Confidential Release for Konka

CAM + 0180h	Camera Interface Debug Mode Control Register	CAM_DEBUG
CAM + 0184h	Camera Module Debug Information Write Out Destination Address	CAM_DSTADDR
CAM + 0188h	Camera Module Debug Information Last Transfer Destination Address	CAM_LSTADDR
CAM + 018Ch	Camera Module Frame Buffer Transfer Out Count Register	CAM_XFERCNT
CAM + 0190h	CMOS Sensor Test Module Configuration Register 1	CAM_MDLCFG1
CAM + 0194h	CMOS Sensor Test Module Configuration Register 2	CAM_MDLCFG2
CAM + 0198h	Reserved	Reserved
CAM + 019Ch	Reserved	Reserved
CAM + 01A0h	AE Address Register	CAM_AEADDR
CAM + 01A4h	AE Window Size Register	CAM_AESIZE
CAM + 01A8h	AE Weight 1 Register	CAM_AEWEIGHT0
CAM + 01ACh	AE Weight 2 Register	CAM_AEWEIGHT1
CAM + 01B0h	AE Weight 3 Register	CAM_AEWEIGHT2
CAM + 01B4h	AE Weight 4 Register	CAM_AEWEIGHT3
CAM + 01B8h	AE Weight 5 Register	CAM_AEWEIGHT4
CAM + 01BCh	AE Weight 6 Register	CAM_AEWEIGHT5
CAM + 01C0h	AE Weight 7 Register	CAM_AEWEIGHT6
CAM + 01C4h	AE Weight 8 Register	CAM_AEWEIGHT7
CAM + 01C8h	AE Area Register	CAM_AEAREA
CAM + 01CCh	AutoDefect Control 1 Register	CAM_AEDEFECT0
CAM + 01D0h	AutoDefect Control 2 Register	CAM_AEDEFECT1
CAM + 01D4h	Flash Control Register	FLASH_CTRL
CAM + 01D8h	Cam Reset Register	CAM_RESET
CAM + 01DCh	TG Status Register	TG_STATUS
CAM + 01E0h	Histogram Boundary Control Register 3	CAM_HIS2
CAM + 01E4h	Histogram Boundary Control Register 4	CAM_HIS3
CAM + 01E8h	Histogram Boundary Control Register 5	CAM_HIS4
CAM + 01ECh	Cam Histogram Result 6	CAM_HISRLT5
CAM + 01F0h	Cam Histogram Result 7	CAM_HISRLT6
CAM + 01F4h	Cam Histogram Result 8	CAM_HISRLT7
CAM + 01F8h	Cam Histogram Result 9	CAM_HISRLT8
CAM + 01FCh	Cam Histogram Result 10	CAM_HISRLT9
CAM + 0200h	Cam Histogram Result 11	CAM_HISRLTA
CAM + 0204h	Cam Histogram Result 12	CAM_HISRLTB
CAM + 0208h	Cam Histogram Result 13	CAM_HISRLTC
CAM + 020Ch	Cam Histogram Result 14	CAM_HISRLTD
CAM + 0210h	Cam Histogram Result 15	CAM_HISRLTE
CAM + 0214h	Shading Control 1 Register	CAM_SHADING1
CAM + 0218h	Shading Control 2 Register	CAM_SHADING2
CAM + 021Ch	Shading R Curve Register 1	CAM_SRCURVE0
CAM + 0220h	Shading R Curve Register 2	CAM_SRCURVE1
CAM + 0224h	Shading R Curve Register 3	CAM_SRCURVE2

MTK Confidential Release for Konka

CAM + 0228h	Shading G Curve Register 1	CAM_SGCURVE0
CAM + 022Ch	Shading G Curve Register 2	CAM_SGCURVE1
CAM + 0230h	Shading G Curve Register 3	CAM_SGCURVE2
CAM + 0234h	Shading B Curve Register 1	CAM_SBCURVE0
CAM + 0238h	Shading B Curve Register 2	CAM_SBCURVE1
CAM + 023Ch	Shading B Curve Register 3	CAM_SBCURVE2
CAM + 0240h	Cam Image-Processor Hue Register 1	CAM_HUE0
CAM + 0244h	Cam Image-Processor Hue Register 2	CAM_HUE1
CAM + 0248h	GMC Debug Register	CAM_GMCDEBUG
CAM + 024Ch	Cam Version Register	CAM_VERSION

Table 52 Camera Interface Register Map

6.14.1.1 TG Register Definitions

CAM+0000h TG Phase Counter Register CAM_PHSCNT

Bit	31	30	29	28	27	26	25	24	23	22	21	20	19	18	17	16
Name	PCEN		CLKEN	CLKPOL	CLKCNT				CLKRS				CLKFL			
Type	R/W		R/W	R/W	R/W				R/W				R/W			
Reset	0		0	0	1				0				1			
Bit	15	14	13	12	11	10	9	8	7	6	5	4	3	2	1	0
Name	HVALID_EN	PXCLK_EN	PXCLK_INV	PXCLK_IN				TGCLK_SEL	PIXCNT				DLATCH			
Type	R/W	R/W	R/W	R/W				R/W	R/W				R/W			
Reset	0	0	0	0				0	1				1			

PCEN TG phase counter enable control

CLKEN Enable sensor master clock (mclk) output to sensor

CLKPOL Sensor master clock polarity control

CLKCNT Sensor master clock frequency divider control.
Sensor master clock will be 52Mhz/CLKCNT, where CLKCNT >=1

CLKRS Sensor master clock rising edge control

CLKFL Sensor master clock falling edge control

HVALID_EN HVALID input enable

PXCLK_EN Pixel clock input monitor, used in internal clock synchronization mode

PXCLK_INV Pixel clock inverse

PXCLK_IN
- **0** Internal clock synchronization
- **1** External pixel clock synchronization

Internal clock synchronization example waveform

(CLKCNT=1,CLKRS=0,CLKFL=1,PIXCNT=3,DLATCH=2)

MTK Confidential Release for Konka

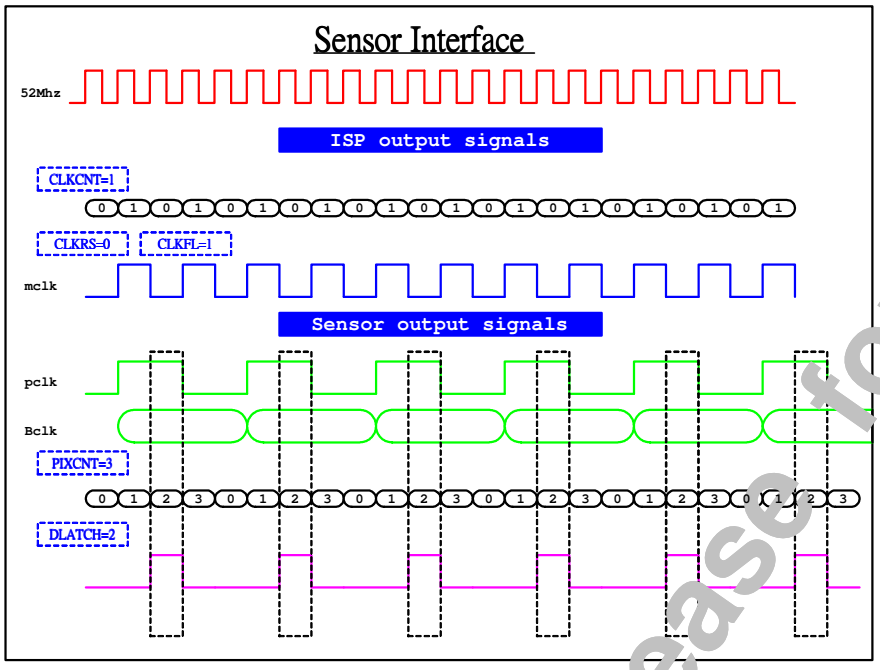

TGCLK_SEL Sensor master based clock selection (0: 52 Mhz, 1: 48 Mhz)
PIXCNT Sensor data latch frequency control, used in internal clock synchronization mode
DLATCH Sensor data latch position control, used in internal clock synchronization mode

CAM+0004h CMOS Sensor Size Configuration Register CAM_CAMWIN

Bit	31	30	29	28	27	26	25	24	23	22	21	20	19	18	17	16
Name					PIXELS											
Type					R/W											
Reset					Fffh											
Bit	15	14	13	12	11	10	9	8	7	6	5	4	3	2	1	0
Name					LINES											
Type					R/W											
Reset					Fffh											

PIXEL Total input pixel number
LINE Total input line number

CAM+0008h TG Grab Range Start/End Pixel Configuration Register CAM_GRABCOL

Bit	31	30	29	28	27	26	25	24	23	22	21	20	19	18	17	16
Name					START											
Type					R/W											
Reset					0											
Bit	15	14	13	12	11	10	9	8	7	6	5	4	3	2	1	0
Name					END											
Type					R/W											
Reset					0											

START Grab start pixel number
END Grab end pixel number

CAM+000Ch TG Grab Range Start/End Line Configuration Register CAM_GRABROW

Bit	31	30	29	28	27	26	25	24	23	22	21	20	19	18	17	16

MTK Confidential Release for Konka

Name					START											
Type					R/W											
Reset					0											
Bit	15	14	13	12	11	10	9	8	7	6	5	4	3	2	1	0
Name					END											
Type					R/W											
Reset					0											

START Grab start line number

END Grab end line number

CAM+0010h CMOS Sensor Mode Configuration Register CAM_CSMODE

Bit	31	30	29	28	27	26	25	24	23	22	21	20	19	18	17	16
Name																
Type																
Reset																
Bit	15	14	13	12	11	10	9	8	7	6	5	4	3	2	1	0
Name									VSPOL	HSPOL	PWRON	RST	AUTO			EN
Type									R/W	R/W	R/W	R/W	R/W			R/W
Reset									0	0	0	0	0			0

VSPOL Image sensor VSYNC polarity

HSPOL Image sensor HSYNC polarity

AUTO Auto lock sensor input horizontal pixel numbers enable

EN Image sensor process counter enable

CAM+0014h Component R,Gr,B,Gb Offset Adjustment Register CAM_RGBOFF

Bit	31	30	29	28	27	26	25	24	23	22	21	20	19	18	17	16
Name	S00	OFFSET00							S01	OFFSET01						
Type	R/W	R/W							R/W	R/W						
Reset	0	0							0	0						
Bit	15	14	13	12	11	10	9	8	7	6	5	4	3	2	1	0
Name	S10	OFFSET10							S11	OFFSET11						
Type	R/W	R/W							R/W	R/W						
Reset	0	0							0	0						

S00 Sign of raw data (0,0) offset adjustment control, 0 : positive 1: negative

OFFSET00 Raw data (0,0) offset adjustment

S01 Sign of raw data (0,1) offset adjustment control, 0 : positive 1: negative

OFFSET01 Raw data (0,1) offset adjustment

S10 Sign of raw data (1,0) offset adjustment control, 0 : positive 1: negative

OFFSET10 Raw data (1,0) offset adjustment

S11 Sign of raw data (1,1) offset adjustment control, 0 : positive 1: negative

OFFSET11 Raw data (1,1) offset adjustment

CAM+0018h View Finder Mode Control Register CAM_VFCON

Bit	31	30	29	28	27	26	25	24	23	22	21	20	19	18	17	16
Name																
Type																
Reset																
Bit	15	14	13	12	11	10	9	8	7	6	5	4	3	2	1	0
Name						SP_DELAY			SP_MODE	TAKE_PIC				FR_CON		
Type						R/W			R/W	R/W				R/W		
Reset						0			0	0				0		

MTK Confidential Release for Konka

SP_DELAY Still Picture Mode delay
SP_MODE Still Picture Mode
TAKE_PIC Take Picture Request
FR_CON Frame Sampling Rate Control
- **000** Every frame is sampled
- **001** One frame is sampled every 2 frames
- **010** One frame is sampled every 3 frames
- **011** One frame is sampled every 4 frames
- **100** One frame is sampled every 5 frames
- **101** One frame is sampled every 6 frames
- **110** One frame is sampled every 7 frames
- **111** One frame is sampled every 8 frames

CAM+001Ch Camera Module Interrupt Enable Register CAM_INTEN

Bit	31	30	29	28	27	26	25	24	23	22	21	20	19	18	17	16
Name								VSYNC_INT_EN	TG_INT_LINENO							
Type								R/W	R/W							
Reset								0	ff							
Bit	15	14	13	12	11	10	9	8	7	6	5	4	3	2	1	0
Name									TG_INT	ATF_INT	AEDONE	ISPDONE	IDLE	GMCOVRUN	REZOVRUN	EXPDO
Type									R/W	R/W	R/W	R/W	R/W	R/W	R/W	R/W
Reset									0	0	0	0	0	0	0	0

VSYNC_INT_EN Vsync interrupt enable, tg_int will become vsync interrupt when it is enable
TG_INT_LINENO TG interrupt line number
TG_INT TG interrupt
AEDONE AE done interrupt enable control
ISPDONE ISP done interrupt enable control
LDLE Returning idle state interrupt enable control
GMCOVRUN GMC port over run interrupt enable control
REZOVRUN Resizer over run interrupt enable control
EXPDO Exposure done interrupt enable control

CAM+0020h Camera Module Interrupt Status Register CAM_INTSTA

Bit	31	30	29	28	27	26	25	24	23	22	21	20	19	18	17	16
Name																
Type																
Reset																
Bit	15	14	13	12	11	10	9	8	7	6	5	4	3	2	1	0
Name									TG_INT	ATF_INT	AEDONE	ISPDONE	IDLE	GMCOVRUN	REZOVRUN	EXPDO
Type									R	R	R	R	R	R	R	R
Reset									0	0	0	0	0	0	0	0

Interrupt Status corresponding with 0x1c CAM_INTEN

CAM+0024h Camera Module Path Config Register CAM_PATH

Bit	31	30	29	28	27	26	25	24	23	22	21	20	19	18	17	16

MTK Confidential Release for Konka

Name	CNTON	CNTMODE		WRITE_LEVEL					REZ_DISCONN	REZ_LPF_OFF	OUTPATH_TYPE		BURSTW_TYPE[2:0]			OUTPATH_EN
Type	R/W	R/W		R/W					RW	RW	R/W		R/W			R/W
Reset	0	0		7					0	0	0		0			0
Bit	15	14	13	12	11	10	9	8	7	6	5	4	3	2	1	0
Name			SWAP_Y	SWAP_CBCR	INDATA_FORMAT	INTYPE_SEL			INPATH_RATE						INPATH_THROTEN	INPATH_SEL
Type		R/W	R/W	R/W	R/W	R/W			R/W						R/W	R/W
Reset		0	0	0	0	0			0						0	0

CNTON Enable Debug Mode Data Transfer Counter

CNTMODE Data Transfer Count Selection

- **00** sRGB count
- **01** YCbCr count

REZ_DISCONN Resizer disconnect enable

REZ_LPF_OFF Resizer low-Pass disable

WRITE_LEVEL Write FIFO threshold level

OUTPATH_TYPE Outpath Type Select

- **00** Bayer Format
- **01** ISP output
- **02** RGB888 Format
- **03** RGB565 Format

BURSTW_TYPE Burst write type selecttion

- **000** Single
- **001** 2 Beat
- **011** 4 Beat
- **101** 8 Beat
- **111** 16 Beat

OUTPATH_EN Enable Output to Memory

SWAP_Y YCbCr in Swap Y

SWAP_CBCR YCbCr in Swap Cb Cr

INDATA_FORMAT Sensor Input Data connection

INTYPE_SEL Input type selection

- **000** Bayer Format
- **001** YUV422 Format
- **101** YCbCr422 Format
- **010** RGB Format

INPATH_RATE Input type rate control

INPATH_THROTEN Input path throttle enable

INPATH_SEL Input path selection

- **0** Sensor input
- **1** From memory

CAM+0028h Camera Module Input Address Register CAM_INADDR

Bit	31	30	29	28	27	26	25	24	23	22	21	20	19	18	17	16
Name	CAM_INADDR[31:16]															
Type	R/W															
Reset	0															
Bit	15	14	13	12	11	10	9	8	7	6	5	4	3	2	1	0

MTK Confidential Release for Konka

Name	CAM_INADDR[15:0]
Type	R/W
Reset	0

CAM_INADDR Input memory address

CAM+002Ch Camera Module Output Address Register CAM_OUTADDR

Bit	31	30	29	28	27	26	25	24	23	22	21	20	19	18	17	16
Name	CAM_OUTADDR[31:16]															
Type	R/W															
Reset	0															
Bit	15	14	13	12	11	10	9	8	7	6	5	4	3	2	1	0
Name	CAM_OUTADDR[15:0]															
Type	R/W															
Reset	0															

CAM_OUTADDR Output memory address

6.14.1.2 Color Process Register Definition

CAM+0030h Preprocessing Control Register 1 CAM_CTRL1

Bit	31	30	29	28	27	26	25	24	23	22	21	20	19	18	17	16
Name	GAIN_COMP								P_LIMIT							
Type	R/W								R/W							
Reset	0								0							
Bit	15	14	13	12	11	10	9	8	7	6	5	4	3	2	1	0
Name	BYPPG	PGAIN_SCOUNT_EN	PIXELID				PGAIN_INT		PGAIN_FRAC							
Type	R/W	R/W	R/W				R/W		R/W							
Reset	0	0	0				1		0							

GAIN_COMP Gain Compensation Control
P_LIMIT Interpolation Limitation Control
BYPPG Bypass pre-gain operating enable
PGAIN_SCOUNT_EN Pre-gain saturation count
PIXELID Bayer pixel type of the first pixel
- **00** R pixel
- **01** Gr pixel
- **10** Gb pixel
- **11** B pixel

PGAIN_INT Pre-gain multiplier integer part
PGAIN_FRAC Pre-gain multiplier fraction part

CAM+0034h Component R,G,B Gain Control Register 1 CAM_RGBGAIN1

Bit	31	30	29	28	27	26	25	24	23	22	21	20	19	18	17	16
Name								B_GAIN								
Type								R/W								
Reset								80h								
Bit	15	14	13	12	11	10	9	8	7	6	5	4	3	2	1	0
Name								GB_GAIN								
Type								R/W								

MTK Confidential Release for Konka

Reset								80h

B_GAIN B Gain
GB_GAIN GB Gain

CAM+0038h Component R,G,B Gain Control Register 2 CAM_RGBGAIN2

Bit	31	30	29	28	27	26	25	24	23	22	21	20	19	18	17	16
Name								R_GAIN								
Type								R/W								
Reset								80h								
Bit	15	14	13	12	11	10	9	8	7	6	5	4	3	2	1	0
Name								GR_GAIN								
Type								R/W								
Reset								80h								

R_GAIN R Gain
GR_GAIN GR Gain

CAM+003Ch Histogram Boundary Control Register1 CAM_HIS0

Bit	31	30	29	28	27	26	25	24	23	22	21	20	19	18	17	16
Name	H1_BND								H2_BND							
Type	R/W								R/W							
Reset	10h								20h							
Bit	15	14	13	12	11	10	9	8	7	6	5	4	3	2	1	0
Name	H3_BND								H4_BND							
Type	R/W								R/W							
Reset	30h								40H							

H1_BND Histogram level 0 up boundary value
H2_BND Histogram level 1 up boundary value
H3_BND Histogram level 2 up boundary value
H4_BND Histogram level 3 up boundary value

CAM+0040h Histogram Boundary Control Register2 CAM_HIS1

Bit	31	30	29	28	27	26	25	24	23	22	21	20	19	18	17	16
Name	H5_BND															
Type	R/W															
Reset	80h															
Bit	15	14	13	12	11	10	9	8	7	6	5	4	3	2	1	0
Name																
Type																
Reset																

H5_BND Histogram level 4 up boundary value

CAM+0044h Preprocessing Control Register 2 CAM_CTRL2

Bit	31	30	29	28	27	26	25	24	23	22	21	20	19	18	17	16
Name									AEALL	CNTEN	AEPID_POL	AEGID_POL	CNTCLR	AEGMSEL		AESEL
Type									R/W	R/W	R/W	R/W	R/W	R/W		R/W
Reset									0	1	0	0	0	0	0	1
Bit	15	14	13	12	11	10	9	8	7	6	5	4	3	2	1	0
Name	ATFEDGEN	ATFALL			AWBALL		GONLY	RLEN		INTEN						
Type	R/W	R/W			R/W		R/W	R/W		R/W						

MTK Confidential Release for Konka

Reset	1	0			1		0	0		0						

AEALL AE full frame single window enable
CNTEN AE counter enable
CNTCLR AE count clear enable
AEPID_POL Polarity of the pixel identifier swapped for AE operating
AEGID_POL Polarity of the line identifier swapped for AE operating
AEGMSEL AE gamma curve selection
- **00** use gamma curve 0
- **01** use gamma curve 1
- **10** use gamma curve 2
- **11** use gamma curve 3

AESEL AE path select
ATFEDGEN ATG Edge Enable Control
ATFALL ATF area all control
AWBALL AWB full frame single window enable
GONLY Use G component only for AE
RLEN Histogram polarity select enable. AELID_POL,AEPID_POL decide the pixel type
INTEN Interpolation FIFO enable

CAM+0058h ATF Window 1 Register CAM_ATFWIN0

Bit	31	30	29	28	27	26	25	24	23	22	21	20	19	18	17	16
Name	LEFT								RIGHT							
Type	R/W								R/W							
Reset	0								0							
Bit	15	14	13	12	11	10	9	8	7	6	5	4	3	2	1	0
Name	TOP								BOTTOM							
Type	R/W								R/W							
Reset	0								0							

LEFT ATF 1th window left side
RIGHT ATF 1th window right side
TOP ATF 1th window top side
BOTTOM ATF 1th window bottom side

CAM+005Ch ATF Window 2 Register CAM_ATFWIN1

Bit	31	30	29	28	27	26	25	24	23	22	21	20	19	18	17	16
Name	LEFT								RIGHT							
Type	R/W								R/W							
Reset	0								0							
Bit	15	14	13	12	11	10	9	8	7	6	5	4	3	2	1	0
Name	TOP								BOTTOM							
Type	R/W								R/W							
Reset	0								0							

LEFT ATF 2th window left side
RIGHT ATF 2th window right side
TOP ATF 2th window top side
BOTTOM ATF 2th window bottom side

CAM+0060h ATF Window 3 Register CAM_ATFWIN2

Bit	31	30	29	28	27	26	25	24	23	22	21	20	19	18	17	16

MTK Confidential Release for Konka

Name	LEFT								RIGHT							
Type	R/W								R/W							
Reset	0								0							
Bit	15	14	13	12	11	10	9	8	7	6	5	4	3	2	1	0
Name	TOP								BOTTOM							
Type	R/W								R/W							
Reset	0								0							

LEFT ATF 3th window left side
RIGHT ATF 3th window right side
TOP ATF 3th window top side
BOTTOM ATF 3th window bottom side

CAM+0064h ATF Window 4 Register CAM_ATFWIN3

Bit	31	30	29	28	27	26	25	24	23	22	21	20	19	18	17	16
Name	LEFT								RIGHT							
Type	R/W								R/W							
Reset	0								0							
Bit	15	14	13	12	11	10	9	8	7	6	5	4	3	2	1	0
Name	TOP								BOTTOM							
Type	R/W								R/W							
Reset	0								0							

LEFT ATF 4th window left side
RIGHT ATF 4th window right side
TOP ATF 4th window top side
BOTTOM ATF 4th window bottom side

CAM+0068h ATF Window 5 Register CAM_ATFWIN4

Bit	31	30	29	28	27	26	25	24	23	22	21	20	19	18	17	16
Name	LEFT								RIGHT							
Type	R/W								R/W							
Reset	0								0							
Bit	15	14	13	12	11	10	9	8	7	6	5	4	3	2	1	0
Name	TOP								BOTTOM							
Type	R/W								R/W							
Reset	0								0							

LEFT ATF 5th window left side
RIGHT ATF 5th window right side
TOP ATF 5th window top side
BOTTOM ATF 5th window bottom side

CAM+006Ch AWB Window Register CAM_AWBWIN

Bit	31	30	29	28	27	26	25	24	23	22	21	20	19	18	17	16
Name	LEFT								RIGHT							
Type	R/W								R/W							
Reset	0								0							
Bit	15	14	13	12	11	10	9	8	7	6	5	4	3	2	1	0
Name	TOP								BOTTOM							
Type	R/W								R/W							
Reset	0								0							

LEFT AWB window left side
RIGHT AWB window right side
TOP AWB window top side

MTK Confidential Release for Konka

BOTTOM AWB window bottom side

CAM+0070h Color Processing Stage Control Register CAM_CPSCON1

Bit	31	30	29	28	27	26	25	24	23	22	21	20	19	18	17	16
Name																
Type																
Reset																
Bit	15	14	13	12	11	10	9	8	7	6	5	4	3	2	1	0
Name									BYPINT				NONLIN	GAVG	LEDGEN	DISLJ
Type									R/W				R/W	R/W	R/W	R/W
Reset									0				0	0	1	0

BYPINT Interpolation first 4 invalid output pixel used enable
NONLIN Nonlinear mode enable in color correction operation
GAVG G channel average mode
LEDGEN Line edge enable
DISLJ Disable line judge enable

CAM+0074h Interpolation Register1 CAM_INTER1

Bit	31	30	29	28	27	26	25	24	23	22	21	20	19	18	17	16
Name			THRE_V									THRE_SM				
Type			R/W									R/W				
Reset			0Ah									05h				
Bit	15	14	13	12	11	10	9	8	7	6	5	4	3	2	1	0
Name			THRE_DHV									THRE_RT				
Type			R/W									R/W				
Reset			19h									10h				

THRE_V Interpolation parameter
THRE_SM Interpolation parameter
THRE_DHV Interpolation parameter
THRE_RT Interpolation parameter

CAM+0078h Interpolation Register 2 CAM_INTER2

Bit	31	30	29	28	27	26	25	24	23	22	21	20	19	18	17	16
Name																
Type																
Reset																
Bit	15	14	13	12	11	10	9	8	7	6	5	4	3	2	1	0
Name										THRE_LEDGE						
Type										R/W						
Reset										14h						

THRE_LEDGE Interpolation parameter

CAM+007Ch Edge Core Register CAM_EDGCORE

Bit	31	30	29	28	27	26	25	24	23	22	21	20	19	18	17	16
Name		COREH							EMBOSS1	EMBOSS2	COREH2					
Type		R/W							R/W	R/W	R/W					
Reset		08h							0	0	1Fh					
Bit	15	14	13	12	11	10	9	8	7	6	5	4	3	2	1	0
Name					COREV				TOP_SLOPE	CORE_CON						

MTK Confidential Release for Konka

Type					R/W	R/W	R/W
Reset					8h	0	14h

COREH Edge parameter
EMBOSS1 Emboss effect mode 1 enable
EMBOSS2 Emboss effect mode 2 enable
COREH2 Edge parameter
COREV [3:2] Negative Slope [1:0] Positive Slope
TOP_SLOPE Edge parameter
CORE_CON Edge parameter

CAM+0080h Edge Gain Register 1

CAM_EDGGAIN 1

Bit	31	30	29	28	27	26	25	24	23	22	21	20	19	18	17	16
Name	SPECIGAIN		SPECIPONLY		EGAIN_H								EGAIN_H2			
Type	R/W		R/W		R/W								R/W			
Reset	0		0		1								3			
Bit	15	14	13	12	11	10	9	8	7	6	5	4	3	2	1	0
Name					EGAIN_VB				OILEN		KNEESEL		EGAINLILNE			
Type					R/W				R/W		R/W		R/W			
Reset					3				0		3		2			

SPECIGAIN Edge special gain value
SPECIPONLY Edge special p only value
EGAIN_H Edge gain H value
EGAIN_H2 Edge gain H2 value
EGAIN_VB Edge gain Vb value
OILEN Oil effect enable
KNEESEL Knee select
EGAINLINE Edge gain line value

CAM+0084h Edge Gain Register 2

CAM_EDGGAIN 2

Bit	31	30	29	28	27	26	25	24	23	22	21	20	19	18	17	16
Name																
Type																
Reset																
Bit	15	14	13	12	11	10	9	8	7	6	5	4	3	2	1	0
Name									SPECIABS	SPECIINV		EGAIN_HC				
Type									R/W	R/W		R/W				
Reset									0	0		Fh				

SPECIABS Edge special absolute enable
SPECIINV Edge special invert enable
EGAIN_HC Edge gain Hc

CAM+0088h Edge Threshold Register

CAM_EDGTHRE

Bit	31	30	29	28	27	26	25	24	23	22	21	20	19	18	17	16
Name	ETH3								ETH_CON							
Type	R/W								R/W							

MTK Confidential Release for Konka

Reset	32h								80h							
Bit	15	14	13	12	11	10	9	8	7	6	5	4	3	2	1	0
Name	ONLYC	THRE_EDGE_SUP								THRL_EDGE_SUP						
Type	R/W	R/W								R/W						
Reset	0	07h								07h						

ETH3 Edge threshold value
ETH_CON Edge parameter
ONLYC Edge enhanced C component only enable
THRE_EDGE_SUP Edge parameter
THRL_EDGE_SUP Edge parameter

CAM+008Ch Edge Vertical Control Register CAM_EDGVCON

Bit	31	30	29	28	27	26	25	24	23	22	21	20	19	18	17	16
Name	HPEN	E_TH1_V									HALF_V					
Type	R/W	R/W									R/W					
Reset	0	18h									1Fh					
Bit	15	14	13	12	11	10	9	8	7	6	5	4	3	2	1	0
Name					SUP_V		SDN_V		E_TH3_V							
Type					R/W		R/W		R/W							
Reset					0		2		32h							

HPEN Edge high pass enable
E_TH1_V Edge parameter
HALF_V Edge parameter
SUP_V Edge parameter
SDN_V Edge parameter
E_TH3_V Edge parameter

CAM+0090h Axis RGB Gain Register CAM_AXGAIN

Bit	31	30	29	28	27	26	25	24	23	22	21	20	19	18	17	16
Name											R_GAIN					
Type											R/W					
Reset											3Fh					
Bit	15	14	13	12	11	10	9	8	7	6	5	4	3	2	1	0
Name			G_GAIN								B_GAIN					
Type			R/W								R/W					
Reset			3Fh								3Fh					

R_GAIN Axis R component gain
G_GAIN Axis G component gain
B_GAIN Axis B component gain

CAM+0094h AWB Configuration Register CAM_OPDCFG

Bit	31	30	29	28	27	26	25	24	23	22	21	20	19	18	17	16
Name	OPDEN	OPDCLR				SUPSEL						U_GAIN				
Type	R/W	R/W				R/W						R/W				
Reset	1	0				3						1Fh				
Bit	15	14	13	12	11	10	9	8	7	6	5	4	3	2	1	0
Name				V_GAIN									Y_LIMIT			
Type				R/W									R/W			
Reset				1Fh									3			

MTK Confidential Release for Konka

OPDEN AWB counter enable
OPDCLR AWB counter clear enable
SUPSEL AWB accumulated maximum value setting. Equation is (192 + 8 * SUPSEL).
U_GAIN AWB U gain value
V_GAIN AWB V gain value
Y_LIMIT AWB white point minimum value,

CAM+0098h OPD Component Parameter Register CAM_OPDPAR

Bit	31	30	29	28	27	26	25	24	23	22	21	20	19	18	17	16
Name		S_RB_P								S_RB_N						
Type		R/W								R/W						
Reset		7Fh								7Fh						
Bit	15	14	13	12	11	10	9	8	7	6	5	4	3	2	1	0
Name		S_MG_P								S_MG_N						
Type		R/W								R/W						
Reset		7Fh								7Fh						

S_RB_P AWB SR Bp value
S_RB_N AWB SR Bn value
S_MG_P AWB SM Gp value
S_MG_N AWB SN Gn value

CAM+009Ch Color Matrix 1 Register CAM_MATRIX1

Bit	31	30	29	28	27	26	25	24	23	22	21	20	19	18	17	16
Name									M11							
Type									R/W							
Reset									20h							
Bit	15	14	13	12	11	10	9	8	7	6	5	4	3	2	1	0
Name	M12								M13							
Type	R/W								R/W							
Reset	80h								80h							

M11 Color matrix 11 value
M12 Color matrix 12 value
M13 Color matrix 13 value

CAM+00A0h Color Matrix 2 Register CAM_MATRIX2

Bit	31	30	29	28	27	26	25	24	23	22	21	20	19	18	17	16
Name									M21							
Type									R/W							
Reset									80h							
Bit	15	14	13	12	11	10	9	8	7	6	5	4	3	2	1	0
Name	M22								M23							
Type	R/W								R/W							
Reset	20h								80h							

M21 Color matrix 21 value
M22 Color matrix 22 value
M23 Color matrix 23 value

CAM+00A4h Color Matrix 3 Register CAM_MATRIX3

Bit	31	30	29	28	27	26	25	24	23	22	21	20	19	18	17	16
Name									M31							
Type									R/W							
Reset									80h							
Bit	15	14	13	12	11	10	9	8	7	6	5	4	3	2	1	0

MTK Confidential Release for Konka

Name	M32	M33
Type	R/W	R/W
Reset	80h	20h

M31 Color matrix 31 value
M32 Color matrix 32 value
M33 Color matrix 33 value

CAM+00A8h Color Matrix RGB Gain Register CAM_MTXGAIN

Bit	31	30	29	28	27	26	25	24	23	22	21	20	19	18	17	16
Name											R_GAIN					
Type											R/W					
Reset											20h					
Bit	15	14	13	12	11	10	9	8	7	6	5	4	3	2	1	0
Name			G_GAIN								B_GAIN					
Type			R/W								R/W					
Reset			20h								20h					

R_GAIN Color matrix R component gain value
G_GAIN Color matrix G component gain value
B_GAIN Color matrix B component gain value

CAM+00ACh Color Process Stage Control Register 2 CAM_CPSCON2

Bit	31	30	29	28	27	26	25	24	23	22	21	20	19	18	17	16
Name																
Type																
Reset																
Bit	15	14	13	12	11	10	9	8	7	6	5	4	3	2	1	0
Name									BYPGM	RGBEDGEN	YEDGEN	OPRGM_IVT	Y_EGAIN			
Type									R/W	R/W	R/W	R/W	R/W			
Reset									1	0	0	0	2			

BYPGM Bypass gamma enable
RGBEDGAINEN Edge enhance before gamma
YEDGEN Edge enhance after gamma
OPDGM_IVT Gamma output inverse mode enable
Y_EGAIN Y channel edge gain value

CAM+00B0h AWB RGB Gain Register CAM_AWBGAIN

Bit	31	30	29	28	27	26	25	24	23	22	21	20	19	18	17	16
Name									AWB_RGAIN							
Type									R/W							
Reset									80h							
Bit	15	14	13	12	11	10	9	8	7	6	5	4	3	2	1	0
Name	AWB_GGAIN								AWB_BGAIN							
Type	R/W								R/W							
Reset	80h								80h							

AWB_RGAIN AWB R component gain value
AWB_GGAIN AWB G component gain value
AWB_BGAIN AWB B component gain value

MTK Confidential Release for Konka

CAM+00B4h Gamma RGB Flare Register

CAM_GAMFLRE

Bit	31	30	29	28	27	26	25	24	23	22	21	20	19	18	17	16
Name									SIGN_R		FLARE_R					
Type									R/W		R/W					
Reset									0		0					
Bit	15	14	13	12	11	10	9	8	7	6	5	4	3	2	1	0
Name	SIGN_G		FLAIRE_G						SIGN_B		FLARE_B					
Type	R/W		R/W						R/W		R/W					
Reset	0		0						0		0					

SIGN_R R flare sign
FLARE_R R flare
SIGN_G G flare sign
FLARE_G G flare
SIGN_B R flare sign
FLARE_B G flare

CAM+00B8h Y Channel Configuration Register

CAM_YCHAN

Bit	31	30	29	28	27	26	25	24	23	22	21	20	19	18	17	16
Name										CONTRAST_GAIN						
Type										R/W						
Reset										40h						
Bit	15	14	13	12	11	10	9	8	7	6	5	4	3	2	1	0
Name	SIGN_BRIGHT_OFFSET	BRIGHT_OFFSET									UV_LP_EN	CSUP_EDGE_GAIN				
Type	R/W	R/W									R/W	R/W				
Reset	1	0									0	10h				

CONTRAST_GAIN Y channel contrast gain value
SIGN_BRIGHT_OFFSET Sign bit of Y channel brightness offset value
BRIGHT_OFFSET Y channel brightness offset value
UV_LP_EN UV channel low pass enable
CSUP_EDGE_GAIN Chroma suppression edge gain value

CAM+00BCh UV Channel Configuration Register

CAM_UVCHAN

Bit	31	30	29	28	27	26	25	24	23	22	21	20	19	18	17	16
Name	U11								V22							
Type	R/W								R/W							
Reset	20h								20h							
Bit	15	14	13	12	11	10	9	8	7	6	5	4	3	2	1	0
Name	SIGN_U_OFFSET	U_OFFSET							SIGN_V_OFFSET	V_OFFSET						
Type	R/W	R/W							R/W	R/W						
Reset	0	0							0	0						

U11 Hue U channel operating value
V11 Hue V channel operating value
SIGN_U_OFFSET Sign bit of Hue U channel offset value
U_OFFSET Hue U channel offset value

MTK Confidential Release for Konka

SIGN_V_OFFSET Sign bit of Hue V channel offset value

V_OFFSET Hue V channel offset value

CAM+00C0h Space Convert YUV Register 1 CAM_SCONV1

Bit	31	30	29	28	27	26	25	24	23	22	21	20	19	18	17	16
Name									Y_GAIN							
Type									R/W							
Reset									FFh							
Bit	15	14	13	12	11	10	9	8	7	6	5	4	3	2	1	0
Name	U_GAIN								V_GAIN							
Type	R/W								R/W							
Reset	91h								B8h							

Y_GAIN Space Convert Y channel gain value

U_GAIN Space Convert U channel gain value

V_GAIN Space Convert V channel gain value

CAM+00C4h Space Convert YUV Register 2 CAM_SCONV2

Bit	31	30	29	28	27	26	25	24	23	22	21	20	19	18	17	16
Name									Y_OFFSET							
Type									R/W							
Reset									01h							
Bit	15	14	13	12	11	10	9	8	7	6	5	4	3	2	1	0
Name	U_OFFSET								V_OFFSET							
Type	R/W								R/W							
Reset	80h								80h							

Y_OFFSET Space Convert Y channel offset value

U_OFFSET Space Convert U channel offset value

V_OFFSET Space Convert V channel offset value

CAM+00C8h Gamma Operation Register 1 CAM_GAMMA1

Bit	31	30	29	28	27	26	25	24	23	22	21	20	19	18	17	16
Name	GAMMA_B1								GAMMA_B2							
Type	R/W								R/W							
Reset	32h								50h							
Bit	15	14	13	12	11	10	9	8	7	6	5	4	3	2	1	0
Name	GAMMA_B3								GAMMA_B4							
Type	R/W								R/W							
Reset	65h								76h							

GAMMA_B1 Gamma operating B1 value

GAMMA_B2 Gamma operating B2 value

GAMMA_B3 Gamma operating B3 value

GAMMA_B4 Gamma operating B4 value

CAM+00CCh Gamma Operation Register 2 CAM_GAMMA2

Bit	31	30	29	28	27	26	25	24	23	22	21	20	19	18	17	16
Name	GAMMA_B5								GAMMA_B6							
Type	R/W								R/W							
Reset	94h								Aeh							
Bit	15	14	13	12	11	10	9	8	7	6	5	4	3	2	1	0
Name	GAMMA_B7								GAMMA_B8							
Type	R/W								R/W							
Reset	C5h								Dah							

GAMMA_B5 Gamma operating B5 value

MTK Confidential Release for Konka

GAMMA_B6 Gamma operating B6 value
GAMMA_B7 Gamma operating B7 value
GAMMA_B8 Gamma operating B8 value

CAM+00D0h Gamma Operation Register 3 CAM_GAMMA3

Bit	31	30	29	28	27	26	25	24	23	22	21	20	19	18	17	16
Name	GAMMA_B9								GAMMA_B10							
Type	R/W								R/W							
Reset	E4h								EDh							
Bit	15	14	13	12	11	10	9	8	7	6	5	4	3	2	1	0
Name	GAMMA_B11															
Type	R/W															
Reset	F7h															

GAMMA_B9 Gamma operating B9 value
GAMMA_B10 Gamma operating B10 value
GAMMA_B11 Gamma operating B11 value

CAM+00D4h OPD Y Result Register CAM_OPDY

Bit	31	30	29	28	27	26	25	24	23	22	21	20	19	18	17	16
Name	OPD_Y[31:16]															
Type	RO															
Reset	0															
Bit	15	14	13	12	11	10	9	8	7	6	5	4	3	2	1	0
Name	OPD_Y[15:0]															
Type	RO															
Reset	0															

OPD_Y OPD Y component accumulation result

CAM+00D8h OPD MG Result Register CAM_OPDMG

Bit	31	30	29	28	27	26	25	24	23	22	21	20	19	18	17	16
Name	OPD_MG[31:16]															
Type	RO															
Reset	0															
Bit	15	14	13	12	11	10	9	8	7	6	5	4	3	2	1	0
Name	OPD_MG[15:0]															
Type	RO															
Reset	0															

OPD_MG OPD MG component accumulation result

CAM+00DCh OPD RB Result Register CAM_OPDRB

Bit	31	30	29	28	27	26	25	24	23	22	21	20	19	18	17	16
Name	OPD_RB[31:16]															
Type	RO															
Reset	0															
Bit	15	14	13	12	11	10	9	8	7	6	5	4	3	2	1	0
Name	OPD_RB[15:0]															
Type	RO															
Reset	0															

OPD_RB OPD RB component accumulation result

CAM+00E0h OPD Pixel Count Register CAM_OPDCNT

Bit	31	30	29	28	27	26	25	24	23	22	21	20	19	18	17	16
Name									PXLCNT							

MTK Confidential Release for Konka

Type									R							
Reset									0							
Bit	15	14	13	12	11	10	9	8	7	6	5	4	3	2	1	0
Name	PXLCNT															
Type	RO															
Reset	0															

PXLCNT OPD pixel counter accumulation result

CAM+00F4h ATF Result 1 Register CAM_AE5RLT

Bit	31	30	29	28	27	26	25	24	23	22	21	20	19	18	17	16
Name				SUM_ATF1[28:16]												
Type				RO												
Reset				0												
Bit	15	14	13	12	11	10	9	8	7	6	5	4	3	2	1	0
Name	SUM_ATF1[15:0]															
Type	RO															
Reset	0															

SUM_ATF1 ATF window 1 accumulation result

CAM+00F8h ATF Result 2 Register CAM_ AE6RLT

Bit	31	30	29	28	27	26	25	24	23	22	21	20	19	18	17	16
Name				SUM_ATF2[28:16]												
Type				RO												
Reset				0												
Bit	15	14	13	12	11	10	9	8	7	6	5	4	3	2	1	0
Name	SUM_ATF2[15:0]															
Type	RO															
Reset	0															

SUM_ATF2 ATF window 2 accumulation result

CAM+00FCh ATF Result 3 Register CAM_ AE7RLT

Bit	31	30	29	28	27	26	25	24	23	22	21	20	19	18	17	16
Name				SUM_ATF3[28:16]												
Type				RO												
Reset				0												
Bit	15	14	13	12	11	10	9	8	7	6	5	4	3	2	1	0
Name	SUM_ATF3[15:0]															
Type	RO															
Reset	0															

SUM_ATF3 ATF window 3 accumulation result

CAM+0100h ATF Result 4 Register CAM_ AE8RLT

Bit	31	30	29	28	27	26	25	24	23	22	21	20	19	18	17	16
Name				SUM_ATF4[28:16]												
Type				RO												
Reset				0												
Bit	15	14	13	12	11	10	9	8	7	6	5	4	3	2	1	0
Name	SUM_ATF4[15:0]															
Type	RO															
Reset	0															

MTK Confidential Release for Konka

SUM_ATF4 ATF window 4 accumulation result

CAM+0104h ATF Result 5 Register — CAM_ AE9RLT

Bit	31	30	29	28	27	26	25	24	23	22	21	20	19	18	17	16
Name				SUM_ATF5[28:16]												
Type				RO												
Reset				0												
Bit	15	14	13	12	11	10	9	8	7	6	5	4	3	2	1	0
Name	SUM_ATF5[15:0]															
Type	RO															
Reset	0															

SUM_ATF5 **ATF window 5 accumulation result**

CAM+0108h CAM Histogram Result 1 — CAM_HISRLT0

Bit	31	30	29	28	27	26	25	24	23	22	21	20	19	18	17	16
Name											CAM_HISRLT1[21:16]					
Type											RO					
Reset											0					
Bit	15	14	13	12	11	10	9	8	7	6	5	4	3	2	1	0
Name	CAM_HISRLT1[15:0]															
Type	RO															
Reset	0															

CAM_HISRLT1 Histogram level 1 count result

CAM+010Ch CAM Histogram Result 2 — CAM_HISRLT1

Bit	31	30	29	28	27	26	25	24	23	22	21	20	19	18	17	16
Name											CAM_HISRLT2[21:16]					
Type											RO					
Reset											0					
Bit	15	14	13	12	11	10	9	8	7	6	5	4	3	2	1	0
Name	CAM_HISRLT2[15:0]															
Type	RO															
Reset	0															

CAM_HISRLT2 Histogram level 2 count result

CAM+0110h CAM Histogram Result 3 — CAM_HISRLT2

Bit	31	30	29	28	27	26	25	24	23	22	21	20	19	18	17	16
Name											CAM_HISRLT3[21:16]					
Type											RO					
Reset											0					
Bit	15	14	13	12	11	10	9	8	7	6	5	4	3	2	1	0
Name	CAM_HISRLT3[15:0]															
Type	RO															
Reset	0															

CAM_HISRLT3 Histogram level 3 count result

CAM+0114h CAM Histogram Result 4 — CAM_HISRLT3

Bit	31	30	29	28	27	26	25	24	23	22	21	20	19	18	17	16
Name											CAM_HISRLT4[21:16]					
Type											RO					
Reset											0					
Bit	15	14	13	12	11	10	9	8	7	6	5	4	3	2	1	0

MTK Confidential Release for Konka

Name	CAM_HISRLT4[15:0]
Type	RO
Reset	0

CAM_HISRLT4 Histogram level 4 count result

CAM+0118h CAM Histogram Result 5 CAM_HISRLT4

Bit	31	30	29	28	27	26	25	24	23	22	21	20	19	18	17	16
Name											CAM_HISRLT5[21:16]					
Type											RO					
Reset											0					
Bit	15	14	13	12	11	10	9	8	7	6	5	4	3	2	1	0
Name	CAM_HISRLT5[15:0]															
Type	RO															
Reset	0															

CAM_HISRLT5 Histogram level 5 count result

CAM+011Ch Low Pass Filter Control Register CAM_LPFCON

Bit	31	30	29	28	27	26	25	24	23	22	21	20	19	18	17	16
Name																V_LPF_EN
Type																R/W
Reset																0
Bit	15	14	13	12	11	10	9	8	7	6	5	4	3	2	1	0
Name	Y_LPFEN			C_LPFEN												
Type	R/W			R/W												
Reset	0			1												

V_LPF_EN Enable vertical low pass filter. Vertical low pass filter will only be available in following two cases:

1. Output image size smaller than 640 pixels.
2. Y_LPFEN or C_LPFEN is turned on

Y_LPFEN Enable Luminance channel low pass filter, if V_LPF_EN is off, only do horizontal low pass

C_LPFEN Enable Chrominance channel low pass filter, if V_LPF_EN is off, only do horizontal low pass

CAM+0120h Y Low Pass Filter Control Register CAM_LPFY

Bit	31	30	29	28	27	26	25	24	23	22	21	20	19	18	17	16
Name	LPFY_WEIGHT0[7:0]								LPFY_WEIGHT1[7:0]							
Type	R/W								R/W							
Reset	0								0							
Bit	15	14	13	12	11	10	9	8	7	6	5	4	3	2	1	0
Name	LPFY_WEIGHT2[7:0]								LPFY_WEIGHT3[7:0]							
Type	R/W								R/W							
Reset	0								0							

LPFY_WEIGHT0 Y low pass filter weighting 0

LPFY_WEIGHT1 Y low pass filter weighting 1

LPFY_WEIGHT2 Y low pass filter weighting 2

LPFY_WEIGHT3 Y low pass filter weighting 3

CAM+0124h CbCr Low Pass Filter Control Register CAM_LPFC

Bit	31	30	29	28	27	26	25	24	23	22	21	20	19	18	17	16
Name	LPFC_WEIGHT0[7:0]								LPFC_WEIGHT1[7:0]							
Type	R/W								R/W							
Reset	0								0							

MTK Confidential Release for Konka

Bit	15	14	13	12	11	10	9	8	7	6	5	4	3	2	1	0
Name	LPFC_WEIGHT2[7:0]								LPFC_WEIGHT[7:0]							
Type	R/W								R/W							
Reset	0								0							

LPFC_WEIGHT0 CbCr low pass filter weighting 0
LPFC _WEIGHT1 CbCr low pass filter weighting 1
LPFC _WEIGHT2 CbCr low pass filter weighting 2
LPFC _WEIGHT3 CbCr low pass filter weighting 3

CAM+0128h Vertical Subsample Control Register CAM_VSUB

Bit	31	30	29	28	27	26	25	24	23	22	21	20	19	18	17	16
Name				V_SUB_EN	V_SUB_IN											
Type				R/W	R/W											
Reset				0	0											
Bit	15	14	13	12	11	10	9	8	7	6	5	4	3	2	1	0
Name					V_SUB_OUT											
Type					R/W											
Reset					0											

V_SUB_EN Vertical sub-sample enable
V_SUB_IN Source vertical size
V_SUB_OUT Sub-sample vertical size

CAM+012ch Horizontal Subsample Control Register CAM_HSUB

Bit	31	30	29	28	27	26	25	24	23	22	21	20	19	18	17	16
Name				H_SUB_EN	H_SUB_IN											
Type				R/W	R/W											
Reset				0	0											
Bit	15	14	13	12	11	10	9	8	7	6	5	4	3	2	1	0
Name					H_SUB_OUT											
Type					R/W											
Reset					0											

H_SUB_EN Horizontal sub-sample enable
H_SUB_IN Source horizontal size
H_SUB_OUT Sub-sample horizontal size

CAM+0130h Sensor Gamma R0 Register CAM_SGAMMA R0

Bit	31	30	29	28	27	26	25	24	23	22	21	20	19	18	17	16
Name				SGAMMA_EN				SGAMMA_IVT	R_B1							
Type				R/W				R/W	R/W							
Reset				0				0	32h							
Bit	15	14	13	12	11	10	9	8	7	6	5	4	3	2	1	0
Name	R_B2								R_B3							
Type	R/W								R/W							
Reset	50h								65h							

SGAMMA_EN Sensor Gamma enable
SGAMMA_IVT Sensor Gamma output invert
R_B1 Gamma operating B1 value
R_B2 Gamma operating B2 value

MTK Confidential Release for Konka

R_B3 Gamma operating B3 value

CAM+0134h Sensor Gamma R1 Register

CAM_SGAMMA R1

Bit	31	30	29	28	27	26	25	24	23	22	21	20	19	18	17	16
Name	R_B4								R_B5							
Type	R/W								R/W							
Reset	76h								94h							
Bit	15	14	13	12	11	10	9	8	7	6	5	4	3	2	1	0
Name	R_B6								R_B7							
Type	R/W								R/W							
Reset	AEh								C5h							

R_B4 Gamma operating B4 value
R_B5 Gamma operating B5 value
R_B6 Gamma operating B6 value
R_B7 Gamma operating B7 value

CAM+0138h Sensor Gamma R2 Register

CAM_SGAMMA R2

Bit	31	30	29	28	27	26	25	24	23	22	21	20	19	18	17	16
Name	R_B8								R_B9							
Type	R/W								R/W							
Reset	DAh								D4h							
Bit	15	14	13	12	11	10	9	8	7	6	5	4	3	2	1	0
Name	R_B10								R_B11							
Type	R/W								R/W							
Reset	EDh								F7h							

R_B8 Gamma operating B8 value
R_B9 Gamma operating B9 value
R_B10 Gamma operating B10 value
R_B11 Gamma operating B11 value

CAM+013ch Sensor Gamma G0 Register

CAM_SGAMMA G0

Bit	31	30	29	28	27	26	25	24	23	22	21	20	19	18	17	16
Name	G_B1								G_B2							
Type	R/W								R/W							
Reset	32h								50h							
Bit	15	14	13	12	11	10	9	8	7	6	5	4	3	2	1	0
Name	G_B3								G_B4							
Type	R/W								R/W							
Reset	65h								76h							

G_B1 Gamma operating B1 value
G_B2 Gamma operating B2 value
G_B3 Gamma operating B3 value
G_B4 Gamma operating B4 value

CAM+0140h Sensor Gamma G1 Register

CAM_SGAMMA G1

Bit	31	30	29	28	27	26	25	24	23	22	21	20	19	18	17	16
Name	G_B5								G_B6							
Type	R/W								R/W							

MTK Confidential Release for Konka

Reset	94h								AEh							
Bit	15	14	13	12	11	10	9	8	7	6	5	4	3	2	1	0
Name	G_B7								G_B8							
Type	R/W								R/W							
Reset	C5h								DAh							

G_B5 Gamma operating B5 value
G_B6 Gamma operating B6 value
G_B7 Gamma operating B7 value
G_B8 Gamma operating B8 value

CAM+0144h Sensor Gamma G2 Register

CAM_SGAMMA G2

Bit	31	30	29	28	27	26	25	24	23	22	21	20	19	18	17	16
Name	G_B9								G_B10							
Type	R/W								R/W							
Reset	E4h								EDh							
Bit	15	14	13	12	11	10	9	8	7	6	5	4	3	2	1	0
Name	G_B11															
Type	R/W															
Reset	F7h															

G_B9 Gamma operating B9 value
G_B10 Gamma operating B10 value
G_B11 Gamma operating B11 value

CAM+0148h Sensor Gamma B0 Register

CAM_SGAMMA B0

Bit	31	30	29	28	27	26	25	24	23	22	21	20	19	18	17	16
Name	B_B1								B_B2							
Type	R/W								R/W							
Reset	32h								50h							
Bit	15	14	13	12	11	10	9	8	7	6	5	4	3	2	1	0
Name	B_B3								B_B4							
Type	R/W								R/W							
Reset	65h								76h							

B_B1 Gamma operating B1 value
B_B2 Gamma operating B2 value
B_B3 Gamma operating B3 value
B_B4 Gamma operating B4 value

CAM+014ch Sensor Gamma B1 Register

CAM_SGAMMA B1

Bit	31	30	29	28	27	26	25	24	23	22	21	20	19	18	17	16
Name	B_B5								B_B6							
Type	R/W								R/W							
Reset	94h								AEh							
Bit	15	14	13	12	11	10	9	8	7	6	5	4	3	2	1	0
Name	B_B7								B_B8							
Type	R/W								R/W							
Reset	C5h								DAh							

B_B5 Gamma operating B5 value
B_B6 Gamma operating B6 value
B_B7 Gamma operating B7 value

MTK Confidential Release for Konka

B_B8 Gamma operating B8 value

CAM+0150h Sensor Gamma B2 Register — CAM_SGAMMAB2

Bit	31	30	29	28	27	26	25	24	23	22	21	20	19	18	17	16
Name	B_B9								B_B10							
Type	R/W								R/W							
Reset	E4h								EDh							
Bit	15	14	13	12	11	10	9	8	7	6	5	4	3	2	1	0
Name	B_B11															
Type	R/W															
Reset	F7h															

B_B9 Gamma operating B9 value

B_B10 Gamma operating B10 value

B_B11 Gamma operating B11 value

CAM+00154h Defect Pixel Configuration Register — CAM_DEFECT0

Bit	31	30	29	28	27	26	25	24	23	22	21	20	19	18	17	16
Name								DEFECT_EN								
Type								R/W								
Reset								0								
Bit	15	14	13	12	11	10	9	8	7	6	5	4	3	2	1	0
Name																
Type																
Reset																

DEFECT_EN Defect table correct enable

CAM+0158h Defect Pixel Table Address Register — CAM_DEFECT1

Bit	31	30	29	28	27	26	25	24	23	22	21	20	19	18	17	16
Name	DEFFECT_ADDR[31:16]															
Type	RW															
Reset	2000h															
Bit	15	14	13	12	11	10	9	8	7	6	5	4	3	2	1	0
Name	DEFECT_ADDR[15:0]															
Type	RW															
Reset	0															

DEFECT_ADDR Defect table location address

CAM+0180h Camera Interface Debug Mode Control Register — CAM_DEBUG

Bit	31	30	29	28	27	26	25	24	23	22	21	20	19	18	17	16
Name																
Type																
Reset																
Bit	15	14	13	12	11	10	9	8	7	6	5	4	3	2	1	0
Name																
Type																
Reset																

CAM+0184h Camera Module Debug Information Write Out Destination Address — CAM_DSTADDR

Bit	31	30	29	28	27	26	25	24	23	22	21	20	19	18	17	16

MTK Confidential Release for Konka

Name	DST_ADD[31:16]															
Type	R/W															
Reset	4000h															
Bit	15	14	13	12	11	10	9	8	7	6	5	4	3	2	1	0
Name	DST_ADD[15:0]															
Type	R/W															
Reset	0000h															

DST_ADD Debug Information Write Output Destination Address

CAM+0188h Camera Module Debug Information Last Transfer Destination Address CAM_LASTADDR

Bit	31	30	29	28	27	26	25	24	23	22	21	20	19	18	17	16
Name	LAST_ADD[31:16]															
Type	R/W															
Reset	0															
Bit	15	14	13	12	11	10	9	8	7	6	5	4	3	2	1	0
Name	LAST_ADD[15:0]															
Type	R/W															
Reset	0															

LAST_ADD Debug Information Last Transfer Destination Address

CAM+018Ch Camera Module Frame Buffer Transfer Out Count Register CAM_XFERCNT

Bit	31	30	29	28	27	26	25	24	23	22	21	20	19	18	17	16
Name	XFER_COUNT [31:16]															
Type	RO															
Reset	0															
Bit	15	14	13	12	11	10	9	8	7	6	5	4	3	2	1	0
Name	XFER_COUNT[15:0]															
Type	RO															
Reset	0															

XFER_COUNT Pixel Transfer Count per Frame

CAM+0190h CMOS Sensor Test Model Configuration Register 1 CAM_MDLCFG1

Bit	31	30	29	28	27	26	25	24	23	22	21	20	19	18	17	16
Name	VSYNC								IDLE_PIXEL_PER_LINE							
Type	R/W								R/W							
Reset	0								0							
Bit	15	14	13	12	11	10	9	8	7	6	5	4	3	2	1	0
Name							ON	RST	STILL	PATTERN			CLK_DIV			
Type							R/W	R/W	R/W	R/W			R/W			
Reset							0	0	0	0			0			

VSYNC VSYNC high duration in line unit(IDLE_PIXEL_PER_LINE + PIXEL)

IDLE_PIXEL_PER_LINE HSYNC low duration in pixel unit

ON Enable CMOS Sensor Model

RST Reset CMOS Sensor Model

STILL Still picture Mode

PATTERN CMOS Sensor Model Test Pattern Selection

CLK_DIV Pixel_Clock/System_Clock Ratio

MTK Confidential Release for Konka

CAM +0194h CMOS Sensor Test Model Configuration Register 2 CAM_MDLCFG 2

Bit	31	30	29	28	27	26	25	24	23	22	21	20	19	18	17	16
Name						LINE										
Type						R/W										
Reset						0										
Bit	15	14	13	12	11	10	9	8	7	6	5	4	3	2	1	0
Name						PIXEL										
Type						R/W										
Reset						0										

LINE CMOS Sensor Model Line Number

PIXEL CMOS Sensor Model Pixel Number (HSYNC high duration in pixel unit)

CAM+0198h Reserved RESERVED

Bit	31	30	29	28	27	26	25	24	23	22	21	20	19	18	17	16
Name																
Type																
Reset																
Bit	15	14	13	12	11	10	9	8	7	6	5	4	3	2	1	0
Name																
Type																
Reset																

CAM+019Ch Reserved RESERVED

Bit	31	30	29	28	27	26	25	24	23	22	21	20	19	18	17	16
Name																
Type																
Reset																
Bit	15	14	13	12	11	10	9	8	7	6	5	4	3	2	1	0
Name																
Type																
Reset																

CAM+01A0h AE Address Register CAM_AEADDR

Bit	31	30	29	28	27	26	25	24	23	22	21	20	19	18	17	16
Name	AE_ADDR[31:16]															
Type	R/W															
Reset	0															
Bit	15	14	13	12	11	10	9	8	7	6	5	4	3	2	1	0
Name	AE_ADDR[15:0]															
Type	R/W															
Reset	0															

AE_ADDR AE Statistic writed out address.

High bandwidth is required, recommend to set in sram

CAM+01A4h AE Window Size Register CAM_AESIZE

Bit	31	30	29	28	27	26	25	24	23	22	21	20	19	18	17	16
Name	AE_VSIZE[15:0]															
Type	R/W															
Reset	0															
Bit	15	14	13	12	11	10	9	8	7	6	5	4	3	2	1	0
Name	AE_HSIZE[15:0]															
Type	R/W															
Reset	0															

MTK Confidential Release for Konka

AE_VSIZE AE window vertical size

AE_HSIZE AE window horizontal size

Notes: Total number of AE statistic window is 63 limited. When AE is on, vertical size and horizontal size must be set to avoid ae window exceed 63

CAM+01A8h AE Weight 1 Register

CAM_AEWEIGHT0

Bit	31	30	29	28	27	26	25	24	23	22	21	20	19	18	17	16
Name		AE_WEIGHT00				AE_WEIGHT01				AE_WEIGHT02				AE_WEIGHT03		
Type		R/W				R/W				R/W				R/W		
Reset		1				1				1				1		
Bit	15	14	13	12	11	10	9	8	7	6	5	4	3	2	1	0
Name		AE_WEIGHT04				AE_WEIGHT05				AE_WEIGHT06				AE_WEIGHT07		
Type		R/W				R/W				R/W				R/W		
Reset		1				1				1				1		

AE_WEIGHT00~07 AE window 00~07 weight

CAM+01ACh AE Weight 2 Register

CAM_AEWEIGHT1

Bit	31	30	29	28	27	26	25	24	23	22	21	20	19	18	17	16
Name		AE_WEIGHT08				AE_WEIGHT09				AE_WEIGHT10				AE_WEIGHT11		
Type		R/W				R/W				R/W				R/W		
Reset		1				1				1				1		
Bit	15	14	13	12	11	10	9	8	7	6	5	4	3	2	1	0
Name		AE_WEIGHT12				AE_WEIGHT13				AE_WEIGHT14				AE_WEIGHT15		
Type		R/W				R/W				R/W				R/W		
Reset		1				1				1				1		

AE_WEIGHT08~15 AE window 08~15 weight

CAM+01B0h AE Weight 3 Register

CAM_AEWEIGHT2

Bit	31	30	29	28	27	26	25	24	23	22	21	20	19	18	17	16
Name		AE_WEIGHT16				AE_WEIGHT17				AE_WEIGHT18				AE_WEIGHT19		
Type		R/W				R/W				R/W				R/W		
Reset		1				1				1				1		
Bit	15	14	13	12	11	10	9	8	7	6	5	4	3	2	1	0
Name		AE_WEIGHT20				AE_WEIGHT21				AE_WEIGHT22				AE_WEIGHT23		
Type		R/W				R/W				R/W				R/W		
Reset		1				1				1				1		

AE_WEIGHT16~23 AE window 16~23 weight

CAM+01B4h AE Weight 4 Register

CAM_AEWEIGHT3

Bit	31	30	29	28	27	26	25	24	23	22	21	20	19	18	17	16
Name		AE_WEIGHT24				AE_WEIGHT25				AE_WEIGHT26				AE_WEIGHT27		
Type		R/W				R/W				R/W				R/W		
Reset		1				1				1				1		
Bit	15	14	13	12	11	10	9	8	7	6	5	4	3	2	1	0
Name		AE_WEIGHT28				AE_WEIGHT29				AE_WEIGHT30				AE_WEIGHT31		
Type		R/W				R/W				R/W				R/W		
Reset		1				1				1				1		

MTK Confidential Release for Konka

AE_WEIGHT24~31 AE window 24~31 weight

CAM+01B8h AE Weight 5 Register

CAM_AEWEIGHT4

Bit	31	30	29	28	27	26	25	24	23	22	21	20	19	18	17	16
Name		AE_WEIGHT32				AE_WEIGHT33				AE_WEIGHT34				AE_WEIGHT35		
Type		R/W				R/W				R/W				R/W		
Reset		1				1				1				1		
Bit	15	14	13	12	11	10	9	8	7	6	5	4	3	2	1	0
Name		AE_WEIGHT36				AE_WEIGHT37				AE_WEIGHT38				AE_WEIGHT39		
Type		R/W				R/W				R/W				R/W		
Reset		1				1				1				1		

AE_WEIGHT 32~39 AE window 32~39 weight

CAM+01BCh AE Weight 6 Register

CAM_AEWEIGHT5

Bit	31	30	29	28	27	26	25	24	23	22	21	20	19	18	17	16
Name		AE_WEIGHT40				AE_WEIGHT41				AE_WEIGHT42				AE_WEIGHT43		
Type		R/W				R/W				R/W				R/W		
Reset		1				1				1				1		
Bit	15	14	13	12	11	10	9	8	7	6	5	4	3	2	1	0
Name		AE_WEIGHT44				AE_WEIGHT45				AE_WEIGHT46				AE_WEIGHT47		
Type		R/W				R/W				R/W				R/W		
Reset		1				1				1				1		

AE_WEIGHT 40~47 AE window 40~47 weight

CAM+01C0h AE Weight 7 Register

CAM_AEWEIGHT6

Bit	31	30	29	28	27	26	25	24	23	22	21	20	19	18	17	16
Name		AE_WEIGHT48				AE_WEIGHT49				AE_WEIGHT50				AE_WEIGHT51		
Type		R/W				R/W				R/W				R/W		
Reset		1				1				1				1		
Bit	15	14	13	12	11	10	9	8	7	6	5	4	3	2	1	0
Name		AE_WEIGHT52				AE_WEIGHT53				AE_WEIGHT54				AE_WEIGHT55		
Type		R/W				R/W				R/W				R/W		
Reset		1				1				1				1		

AE_WEIGHT 48~55 AE window 48~55 weight

CAM+01C4h AE Weight 8 Register

CAM_AEWEIGHT7

Bit	31	30	29	28	27	26	25	24	23	22	21	20	19	18	17	16
Name		AE_WEIGHT56				AE_WEIGHT57				AE_WEIGHT58				AE_WEIGHT59		
Type		R/W				R/W				R/W				R/W		
Reset		1				1				1				1		
Bit	15	14	13	12	11	10	9	8	7	6	5	4	3	2	1	0
Name		AE_WEIGHT60				AE_WEIGHT61				AE_WEIGHT62						
Type		R/W				R/W				R/W						
Reset		1				1				1						

AE_WEIGHT 56~62 AE window 56~62 weight

CAM+01C8h AE Area Register

CAM_AEAREA

Bit	31	30	29	28	27	26	25	24	23	22	21	20	19	18	17	16
Name	AE_VOFFSET[7:0]								AE_HOFFSET[7:0]							

MTK Confidential Release for Konka

Type	R/W								R/W							
Reset	0								0							
Bit	15	14	13	12	11	10	9	8	7	6	5	4	3	2	1	0
Name	AE_FRAMECNT[7:0]										AE_AREACNT[5:0]					
Type	R										R					
Reset	0										0					

AE_VOFFSET AE window vertical offset

AE_HOFFSET AE window horizontal offset

AE_FRAMECNT AE Frame interval counter

AE_AREACNT AE Window Area counter

CAM+01CCh AutoDefect Control 1 Register

CAM_ADEFECT0

Bit	31	30	29	28	27	26	25	24	23	22	21	20	19	18	17	16
Name	ADC_EN	ADL_EN	ADR_EN	ADU_EN	ADD_EN	DEADCHECK	GCHECKSEL		RBCHECKSEL		BRIGHTTHD			BLACKTHD		
Type	R/W	R/W	R/W	R/W	R/W	R/W	R/W		R/W		R/W			R/W		
Reset	0	0	0	0	0	0	0		0		0			0		
Bit	15	14	13	12	11	10	9	8	7	6	5	4	3	2	1	0
Name	AE_INTERVAL															
Type	R/W															
Reset	0															

ADC_En Center Autodefect cell enable
ADL_En Left Autodefect cell enable
ADR_En Right Autodefect cell enable
ADU_En Up Autodefect cell enable
ADD_En Down Autodefect cell enable
DEADCHECK Dead pixel check enable
GCHECKSEI G pixel check method selection
- **00** near group check only
- **01** near and far groups check
- **10** far group check only
- **11** reserved

RBCHECKSEI RB pixel check method selection
- **00** near group check only
- **01** near and far groups check
- **10** far group check only
- **11** reserved

BRIGHTTHD Black pixel threshold = **BRIGHTTHD *4**
BLACKTHD Black pixel threshold = **BLACKTHD *4**
AE_INTERVAL AE frame interval

CAM+01D0h AutoDefect Control 2 Register

CAM_ADEFECT1

Bit	31	30	29	28	27	26	25	24	23	22	21	20	19	18	17	16
Name	GCHECKTHD								RBCHECKTHD							
Type	R/W								R/W							
Reset	0								0							

MTK Confidential Release for Konka

Bit	15	14	13	12	11	10	9	8	7	6	5	4	3	2	1	0
Name	GCORRECTTHD								RBCORRECTTHD							
Type	R/W								R/W							
Reset	0								0							

GCHECKTHD G pixel check threshold
RBCHECKTHD RB pixel check threshold
GCORRECTTHD G pixel correct threshold
RBCORRECTTHD RB pixel correct threshold

CAM+01D4h Flash Control Register CAM_FLASH

Bit	31	30	29	28	27	26	25	24	23	22	21	20	19	18	17	16
Name	FLASH_OUT			FLASH_EN				FLASH_STARTPNT				FLASH_POL	FLASH_LNUNIT[3:0]			
Type	R			RW				RW				RW	RW			
Reset				0				0				0	0			
Bit	15	14	13	12	11	10	9	8	7	6	5	4	3	2	1	0
Name	FLASH_LNUNIT_NO[7:0]														FLASH_FRAME_DELAY[1:0]	
Type	RW														RW	
Reset	0														0	

FLASH_OUT Flash out status

FLASH_EN Flash enable

FLASH_STARTPNT Flash start point

0 Start from vsync start

1 Start from expdone

FLASH_POL Flash line polarity

FLASH_LNUNIT Flash line unit, 0~15 lines

FLASH_LNUNIT_NO Flash line unit count

FLASH_FRAME_DELAY Flash frame delay

CAM +01D8h CAM RESET Register CAM_RESET

Bit	31	30	29	28	27	26	25	24	23	22	21	20	19	18	17	16
Name												TG_STATUS				
Type												R				
Reset																
Bit	15	14	13	12	11	10	9	8	7	6	5	4	3	2	1	0
Name	ISP_FRAME_COUNT[7:0]															ISP_RESET
Type	RW															RW
Reset	0															0

ISP_FRAME_COUNT ISP frame counter
ISP_RESET ISP reset

MTK Confidential Release for Konka

CAM +01DCh TG STATUS Register TG_STATUS

Bit	31	30	29	28	27	26	25	24	23	22	21	20	19	18	17	16
Name				SYN_VFON	LINE_COUNT[11:0]											
Type				R	R											
Reset																
Bit	15	14	13	12	11	10	9	8	7	6	5	4	3	2	1	0
Name					PIXEL_COUNT[11:0]											
Type					R											
Reset																

SYN_VFON TG view finder status

LINE_COUNT TG line counter

PIXEL_COUNT TG pixel counter

CAM+01E0h Histogram Boundary Control Register3 CAM_HIS2

Bit	31	30	29	28	27	26	25	24	23	22	21	20	19	18	17	16
Name	H6_BND								H7_BND							
Type	R/W								R/W							
Reset	60h								70h							
Bit	15	14	13	12	11	10	9	8	7	6	5	4	3	2	1	0
Name	H8_BND								H9_BND							
Type	R/W								R/W							
Reset	80h								90H							

H6_BND Histogram level 6 up boundary value

H7_BND Histogram level 7 up boundary value

H8_BND Histogram level 8 up boundary value

H9_BND Histogram level 9 up boundary value

CAM+01E4h Histogram Boundary Control Register4 CAM_HIS3

Bit	31	30	29	28	27	26	25	24	23	22	21	20	19	18	17	16
Name	HA_BND								HB_BND							
Type	R/W								R/W							
Reset	a0h								b0h							
Bit	15	14	13	12	11	10	9	8	7	6	5	4	3	2	1	0
Name	HC_BND								HD_BND							
Type	R/W								R/W							
Reset	c0h								d0H							

HA_BND Histogram level A up boundary value

HB_BND Histogram level B up boundary value

HC_BND Histogram level C up boundary value

HD_BND Histogram level D up boundary value

CAM+01E8h Histogram Boundary Control Register5 CAM_HIS4

Bit	31	30	29	28	27	26	25	24	23	22	21	20	19	18	17	16
Name	HE_BND								HF_BND							
Type	R/W								R/W							
Reset	e0h								f0h							
Bit	15	14	13	12	11	10	9	8	7	6	5	4	3	2	1	0
Name																
Type																
Reset																

HDE_ND Histogram level E up boundary value

MTK Confidential Release for Konka

HEF_ND Histogram level F up boundary value

CAM+01ECh CAM Histogram Result 6 CAM_HISRLT5

Bit	31	30	29	28	27	26	25	24	23	22	21	20	19	18	17	16
Name											CAM_HISRLT6[21:16]					
Type											RO					
Reset											0					
Bit	15	14	13	12	11	10	9	8	7	6	5	4	3	2	1	0
Name	CAM_HISRLT6[15:0]															
Type	RO															
Reset	0															

CAM_HISRLT6 Histogram level 6 count result

CAM+01F0h CAM Histogram Result 7 CAM_HISRLT6

Bit	31	30	29	28	27	26	25	24	23	22	21	20	19	18	17	16
Name											CAM_HISRLT7[21:16]					
Type											RO					
Reset											0					
Bit	15	14	13	12	11	10	9	8	7	6	5	4	3	2	1	0
Name	CAM_HISRLT7[15:0]															
Type	RO															
Reset	0															

CAM_HISRLT7 Histogram level 7 count result

CAM+01F4h CAM Histogram Result 8 CAM_HISRLT7

Bit	31	30	29	28	27	26	25	24	23	22	21	20	19	18	17	16
Name											CAM_HISRLT8[21:16]					
Type											RO					
Reset											0					
Bit	15	14	13	12	11	10	9	8	7	6	5	4	3	2	1	0
Name	CAM_HISRLT8[15:0]															
Type	RO															
Reset	0															

CAM_HISRLT8 Histogram level 8 count result

CAM+01F8h CAM Histogram Result 9 CAM_HISRLT8

Bit	31	30	29	28	27	26	25	24	23	22	21	20	19	18	17	16
Name											CAM_HISRLT9[21:16]					
Type											RO					
Reset											0					
Bit	15	14	13	12	11	10	9	8	7	6	5	4	3	2	1	0
Name	CAM_HISRLT9[15:0]															
Type	RO															
Reset	0															

CAM_HISRLT9 Histogram level 9 count result

CAM+01FCh CAM Histogram Result 10 CAM_HISRLT9

Bit	31	30	29	28	27	26	25	24	23	22	21	20	19	18	17	16
Name											CAM_HISRLTA[21:16]					
Type											RO					
Reset											0					
Bit	15	14	13	12	11	10	9	8	7	6	5	4	3	2	1	0
Name	CAM_HISRLTA[15:0]															
Type	RO															
Reset	0															

MTK Confidential Release for Konka

CAM_HISRLTA Histogram level 10 count result

CAM+0200h CAM Histogram Result 11 CAM_HISRLTA

Bit	31	30	29	28	27	26	25	24	23	22	21	20	19	18	17	16
Name											CAM_HISRLTB[21:16]					
Type											RO					
Reset											0					
Bit	15	14	13	12	11	10	9	8	7	6	5	4	3	2	1	0
Name	CAM_HISRLTB[15:0]															
Type	RO															
Reset	0															

CAM_HISRLTB Histogram level 11 count result

CAM+0204h CAM Histogram Result 12 CAM_HISRLTB

Bit	31	30	29	28	27	26	25	24	23	22	21	20	19	18	17	16
Name											CAM_HISRLTC[21:16]					
Type											RO					
Reset											0					
Bit	15	14	13	12	11	10	9	8	7	6	5	4	3	2	1	0
Name	CAM_HISRLTC[15:0]															
Type	RO															
Reset	0															

CAM_HISRLTC Histogram level 12 count result

CAM+0208h CAM Histogram Result 13 CAM_HISRLTC

Bit	31	30	29	28	27	26	25	24	23	22	21	20	19	18	17	16
Name											CAM_HISRLTD[21:16]					
Type											RO					
Reset											0					
Bit	15	14	13	12	11	10	9	8	7	6	5	4	3	2	1	0
Name	CAM_HISRLTD[15:0]															
Type	RO															
Reset	0															

CAM_HISRLTD Histogram level 13 count result

CAM+020Ch CAM Histogram Result 14 CAM_HISRLTD

Bit	31	30	29	28	27	26	25	24	23	22	21	20	19	18	17	16
Name											CAM_HISRLTE[21:16]					
Type											RO					
Reset											0					
Bit	15	14	13	12	11	10	9	8	7	6	5	4	3	2	1	0
Name	CAM_HISRLTE[15:0]															
Type	RO															
Reset	0															

CAM_HISRLTE Histogram level 14 count result

CAM+0210h CAM Histogram Result 15 CAM_HISRLTE

Bit	31	30	29	28	27	26	25	24	23	22	21	20	19	18	17	16
Name											CAM_HISRLTF[21:16]					
Type											RO					
Reset											0					
Bit	15	14	13	12	11	10	9	8	7	6	5	4	3	2	1	0
Name	CAM_HISRLTF[15:0]															
Type	RO															

MTK Confidential Release for Konka

Reset	0

CAM_HISRLTF Histogram level 15 count result

CAM+00214h Shading Cotrol 1 Register

CAM_SHADING 1

Bit	31	30	29	28	27	26	25	24	23	22	21	20	19	18	17	16
Name		SHADING_RANGE[8]	SHADING_RANGE_EN	SHADING_EN	SHADING_CENTERY[11:0]											
Type		RW	RW	RW	RW											
Reset		0	0	0	0											
Bit	15	14	13	12	11	10	9	8	7	6	5	4	3	2	1	0
Name	K_FACTOR		RADIUS_FACTOR		SHADING_CENTERX[11:0]											
Type	R/W		R/W		RW											
Reset	0		0		0											

SHADING_RANGE[8] Shading range bit 8

SHADING_RANGE_EN Shading range enable

SHADING_EN Shading enable

Shading_out = Shading_in*(1+Compensation_Ratio)

Where Compensation_Ratio = Effective_Range*(K>>(26-K_FACTOR))

K = KR when R pixel, KG when G pixel, KB when B pixel

K_FACTOR Shading parameter factor, used to scale up parameter.

RADIUS_FACTOR Radius factor, select effective radius range.

Effective_Range = ((effective_diffx)^2) + ((effective_diffy)^2)

Where effective_diffx = (x-centerx)>>(3-RADIUS_FACTOR)

effective_diffy = (y-centery)>>(3-RADIUS_FACTOR)

Because of hardware limitation,

effective maximum radius(range between center) is

00 Effective maximum radius : 4095

01 Effective maximum radius : 2047

02 Effective maximum radius : 1023

03 Effective maximum radius : 511

SHADING_CENTERY Shading center y coordinate x 2

SHADING_CENTERX Shading center x coordinate x 2

CAM+0218h Shading Control 2 Register

CAM_SHADING 2

Bit	31	30	29	28	27	26	25	24	23	22	21	20	19	18	17	16
Name	SHADING_KR[7:0]								SHADING_KG[7:0]							
Type	RW								RW							

MTK Confidential Release for Konka

Reset	0								0							
Bit	15	14	13	12	11	10	9	8	7	6	5	4	3	2	1	0
Name	SHADING_KB[7:0]								SHADING_RANGE[7:0]							
Type	RW								R/W							
Reset	0								Ff							

SHADING_KR Shading R pixel parameter

SHADING_KG Shading G pixel parameter

SHADING_KB Shading B pixel parameter

SHADING_RANGE Shading range, bit8 refer to 0x214 bit 30

CAM+021Ch Shading R Curve Register 1

CAM_SRCURVE0

Bit	31	30	29	28	27	26	25	24	23	22	21	20	19	18	17	16
Name				SHADING_CURVE_EN		SHADING_IVT	SHADING_CURVE_SEL		SHADING_R_B1							
Type				R/W		R/W	R/W		R/W							
Reset				0		0	0		20h							
Bit	15	14	13	12	11	10	9	8	7	6	5	4	3	2	1	0
Name	SHADING_R_B2								SHADING_R_B3							
Type	R/W								R/W							
Reset	40h								60h							

SHADING_CURVE_EN Shading curve enable

SHADING_IVT Shading curve output invert

SHADING_CURVE_SEL Shading curve input selection

- **00** 1/8 Effective_Range input
- **01** 1/4 Effective_Range input
- **02** 1/2 Effecitve_Range input
- **03** Effective Range input

SHADING_R_B1 R shading curve operating B1 value

SHADING_R_B2 R shading curve operating B2 value

SHADING_R_B3 R shading curve operating B3 value

CAM+0220h Shading R Curve Register 2

CAM_SRCURVE1

Bit	31	30	29	28	27	26	25	24	23	22	21	20	19	18	17	16
Name	SHADING_R_B4								SHADING_R_B5							
Type	R/W								R/W							
Reset	80h								90h							
Bit	15	14	13	12	11	10	9	8	7	6	5	4	3	2	1	0
Name	SHADING_R_B6								SHADING_R_B7							
Type	R/W								R/W							
Reset	A0h								B0h							

SHADING_R_B4 R shading curve operating B4 value

SHADING_R_B5 R shading curve operating B5 value

SHADING_R_B6 R shading curve operating B6 value

SHADING_R_B7 R shading curve operating B7 value

MTK Confidential Release for Konka

CAM+0224h Shading R Curve Register 3

CAM_SRCURV E2

Bit	31	30	29	28	27	26	25	24	23	22	21	20	19	18	17	16
Name	SHADING_R_B8								SHADING_R_B9							
Type	R/W								R/W							
Reset	C0h								D0h							
Bit	15	14	13	12	11	10	9	8	7	6	5	4	3	2	1	0
Name	SHADING_R_B10								SHADING_R_B11							
Type	R/W								R/W							
Reset	E0h								F0h							

SHADING_R_B8 R shading curve operating B8 value
SHADING_R_B9 R shading curve operating B9 value
SHADING_R_B10 R shading curve operating B10 value
SHADING_R_B11 R shading curve operating B11 value

CAM+0228h Shading G Curve Register 1

CAM_SGCURV E0

Bit	31	30	29	28	27	26	25	24	23	22	21	20	19	18	17	16
Name	SHADING_G_B1								SHADING_G_B2							
Type	R/W								R/W							
Reset	20h								40h							
Bit	15	14	13	12	11	10	9	8	7	6	5	4	3	2	1	0
Name	SHADING_G_B3								SHADING_G_B4							
Type	R/W								R/W							
Reset	60h								80h							

SHADING_G_B1 G shading curve operating B1 value
SHADING_G_B2 G shading curve operating B2 value
SHADING_G_B3 G shading curve operating B3 value
SHADING_G_B4 G shading curve operating B4 value

CAM+022Ch Shading G Curve Register 2

CAM_SGCURV E1

Bit	31	30	29	28	27	26	25	24	23	22	21	20	19	18	17	16
Name	SHADING_G_B5								SHADING_G_B6							
Type	R/W								R/W							
Reset	90h								A0h							
Bit	15	14	13	12	11	10	9	8	7	6	5	4	3	2	1	0
Name	SHADING_G_B7								SHADING_G_B8							
Type	R/W								R/W							
Reset	B0h								C0h							

SHADING_G_B5 G shading curve operating B5 value
SHADING_G_B6 G shading curve operating B6 value
SHADING_G_B7 G shading curve operating B7 value
SHADING_G_B8 G shading curve operating B8 value

CAM+0230h Shading G Curve Register 3

CAM_SGCURV E2

Bit	31	30	29	28	27	26	25	24	23	22	21	20	19	18	17	16
Name	SHADING_G_B9								SHADING_G_B10							
Type	R/W								R/W							
Reset	D0h								E0h							

MTK Confidential Release for Konka

Bit	15	14	13	12	11	10	9	8	7	6	5	4	3	2	1	0
Name	SHADING_G_B11															
Type	R/W															
Reset	F0h															

SHADING_G_B9 G shading curve operating B9 value
SHADING_G_B10 G shading curve operating B10 value
SHADING_G_B11 G shading curve operating B11 value

CAM+0234h Shading B Curve Register 1

CAM_SBCURV E0

Bit	31	30	29	28	27	26	25	24	23	22	21	20	19	18	17	16
Name	SHADING_B_B1								SHADING_B_B2							
Type	R/W								R/W							
Reset	20h								40h							
Bit	15	14	13	12	11	10	9	8	7	6	5	4	3	2	1	0
Name	SHADING_B_B3								SHADING_B_B4							
Type	R/W								R/W							
Reset	60h								80h							

SHADING_B_B1 B shading curve operating B1 value
SHADING_B_B2 B shading curve operating B2 value
SHADING_B_B3 B shading curve operating B3 value
SHADING_B_B4 B shading curve operating B4 value

CAM+0238h Shading B Curve Register 2

CAM_SGCURV E1

Bit	31	30	29	28	27	26	25	24	23	22	21	20	19	18	17	16
Name	SHADING_B_B5								SHADING_B_B6							
Type	R/W								R/W							
Reset	90h								A0h							
Bit	15	14	13	12	11	10	9	8	7	6	5	4	3	2	1	0
Name	SHADING_B_B7								SHADING_B_B8							
Type	R/W								R/W							
Reset	B0h								C0h							

SHADING_B_B5 G shading curve operating B5 value
SHADING_B_B6 G shading curve operating B6 value
SHADING_B_B7 G shading curve operating B7 value
SHADING_B_B8 G shading curve operating B8 value

CAM+023Ch Shading B Curve Register 3

CAM_SBCURV E2

Bit	31	30	29	28	27	26	25	24	23	22	21	20	19	18	17	16
Name	SHADING_B_B9								SHADING_B_B10							
Type	R/W								R/W							
Reset	D0h								E0h							
Bit	15	14	13	12	11	10	9	8	7	6	5	4	3	2	1	0
Name	SHADING_B_B11															
Type	R/W															
Reset	F0h															

SHADING_B_B9 B shading curve operating B9 value
SHADING_B_B10 B shading curve operating B10 value
SHADING_B_B11 B shading curve operating B11 value

MTK Confidential Release for Konka

CAM+0240h CAM IMAGE-PROCOR HUE Register 1 CAM_HUE0

Bit	31	30	29	28	27	26	25	24	23	22	21	20	19	18	17	16
Name																HUE_EN
Type																RW
Reset																0
Bit	15	14	13	12	11	10	9	8	7	6	5	4	3	2	1	0
Name	HUE11								HUE12							
Type	RW								RW							
Reset	40h								0							

CAM+0244h CAM IMAGE-PROCOR HUE Register 2 CAM_HUE1

Bit	31	30	29	28	27	26	25	24	23	22	21	20	19	18	17	16
Name	HUE21								HUE22							
Type	RW								RW							
Reset	0								40							
Bit	15	14	13	12	11	10	9	8	7	6	5	4	3	2	1	0
Name																
Type																
Reset																

HUE_EN Hue enable

This register controls the parameter of hue adjustment for the image. The effect is performed on the U and V component of YUV color space. The user should specify the coefficients that form the transformation matrix. The formula is listed as follows:

$$\begin{bmatrix} u_0 \\ v_o \end{bmatrix} = \begin{bmatrix} C11 & C12 \\ C21 & C22 \end{bmatrix} \cdot \begin{bmatrix} u_i \\ v_i \end{bmatrix}$$

$$where \quad C11 = 64\cos\theta, \quad C12 = 64\sin\theta, \quad C21 = -64\sin\theta, \quad C22 = 64\cos\theta$$

The coefficients are in 2's complement format and range from C0h to 40h (from –64 to 64 in decimal, while 64 is normalized to 1 corresponding to cosine values). Any value beyond this range is invalid.

For example, to rotate the color space counterclockwise by 30 degree, the coefficients should be 37h, 20h, e0h, and 37h.

HUE11 The coefficient C11 of the transformation matrix in 2's complement format.
HUE12 The coefficient C12 of the transformation matrix in 2's complement format.
HUE21 The coefficient C21 of the transformation matrix in 2's complement format.
HUE22 The coefficient C22 of the transformation matrix in 2's complement format.

CAM +0248h CAM GMC DEBUG Register CAM_DEBUG

Bit	31	30	29	28	27	26	25	24	23	22	21	20	19	18	17	16
Name																
Type																
Reset																
Bit	15	14	13	12	11	10	9	8	7	6	5	4	3	2	1	0
Name																
Type																
Reset																

CAM +024Ch CAM VERSION Register CAM_VERSION

Bit	31	30	29	28	27	26	25	24	23	22	21	20	19	18	17	16

MTK Confidential Release for Konka

Name	YEAR[16:0]															
Type	R															
Reset																
Bit	15	14	13	12	11	10	9	8	7	6	5	4	3	2	1	0
Name	MONTH[15:0]								DATE[15:0]							
Type	R								R							
Reset																

YEAR Year ASCII
MONTH Month ASCII
DATE Date ASCII

6.15 Image DMA

6.15.1 General Description

Image DMA plays the role of moving image data between different image modules and memory. illustrates the interconnections around Image DMA. The major functions of Image DMA are list below.

- Data movement
- Color format conversion (RGB565 ⇔ RGB888, YUV444 ⇔ YUV420, YUV444 ⇒ YUV422)
- Data stream flow control on JPEG Encoder DMA
- Auto double buffer switching for video capture/playback
- Hardware handshaking with LCD DMA, and direct couple interface to LCD DMA
- Image panning
- Supporting BMP image file formats.

Image DMA consists of nine DMA engines. They are JPEG Encode DMA, Video Encode DMA, Video Decode DMA, Image Buffer Write 1 DMA (IBW1 DMA), Image Buffer Write 2 DMA (IBW2 DMA), Image Buffer Write 3 DMA (IBW3 DMA), Image Buffer Write 4 DMA (IBW4 DMA), Image Buffer Read 1 DMA (IBR1 DMA), and Image Buffer Read 2 DMA (IBR2 DMA). Each DMA engine has specific purposes. The details of each DMA engine are described in following sections.

MTK Confidential Release for Konka

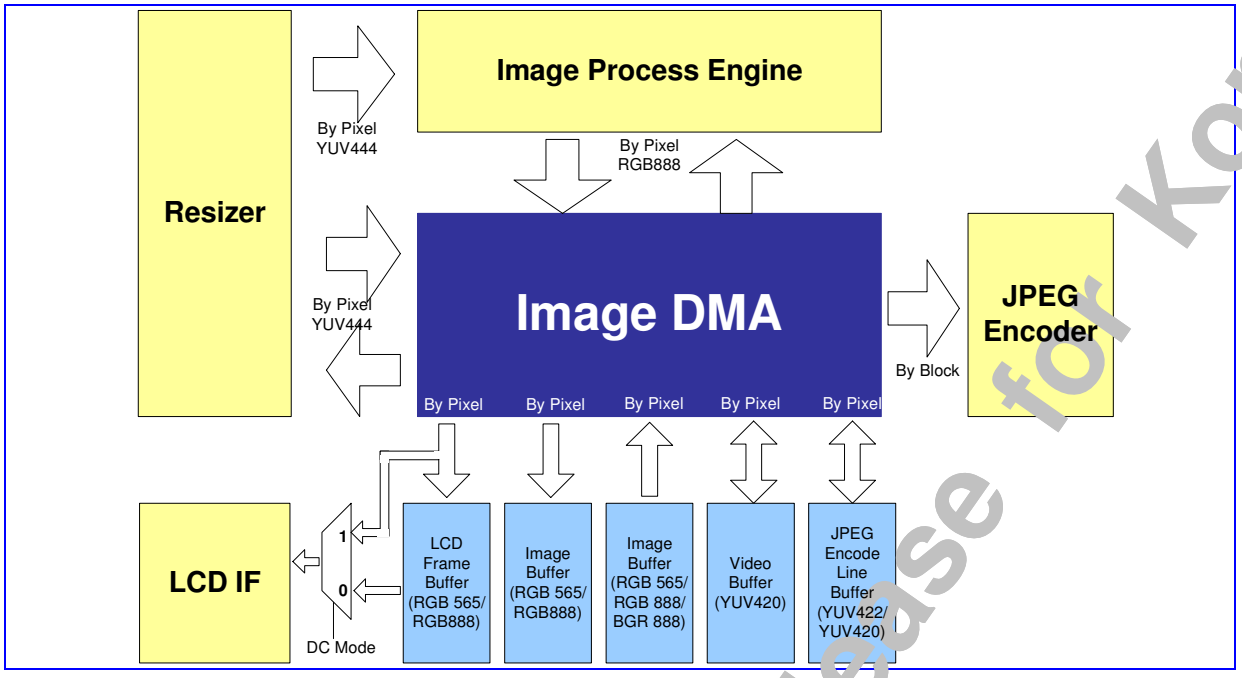

Figure 30 inter-connection around Image DMA

6.15.1.1 JPEG Encoder DMA

The main function of JPEG Encoder DMA is to receive YUV 444 data from Image Engine by pixels and transmit YUV422/ YUV420 data to JPEG Encoder by 8 X 8 blocks.

6.15.1.1.1 Flow Control

To achieve pixel to block conversion, line buffer must be given, and its line count must be multiple of 8. For better performance, it's recommended to have a minimum of 16 lines of buffer. For applications where images capturing from the camera, because the data stream from camera can not be stopped, the number of lines must not be less than 16, (24 lines or more is recommended). Otherwise, data may be lost in the interface between the Image Signal Process and Capture Resize modules.

6.15.1.1.2 Data format conversion

Since the JPEG encoder needs data of signed 2's complement format. The JPEG Encoder DMA takes the responsibility to handle the data format conversion. Each of Y, U, or V component values of input data is of 8-bit unsigned format, which represents a value ranging from 0 to 255. The component value of the data is converted into 8-bit 2's complement format, which represents a value ranging from –128 to 127.

6.15.1.1.3 Padding

For pictures whose frame size are not multiples of 16 X 8 blocks for YUV422 mode or 16 X 16 blocks for YUV420 mode, JPEG Encoder DMA takes the responsibility to handle the image boundary. In horizontal direction, JPEG Encoder DMA automatically pads the last pixel of every line to the tail of the corresponding line until the number of pixels in the line is multiple of 16. Similarly, JPEG Encoder pads the last line to the tail of the image frame until the line count is multiples of 8 for YUV422 mode or 16 for YUV420 mode in vertical direction. An example of YUV422 mode is illustrated in . In this case, the original frame size is (16n + 13) X (8n + 6), which is not multiple of 16 X 8. Therefore, three additional pixels are padded to the end of each line to make the pixel count multiple of 16. In the vertical direction, two more lines are padded with last line to make line count to multiple of 8.

MTK Confidential Release for Konka

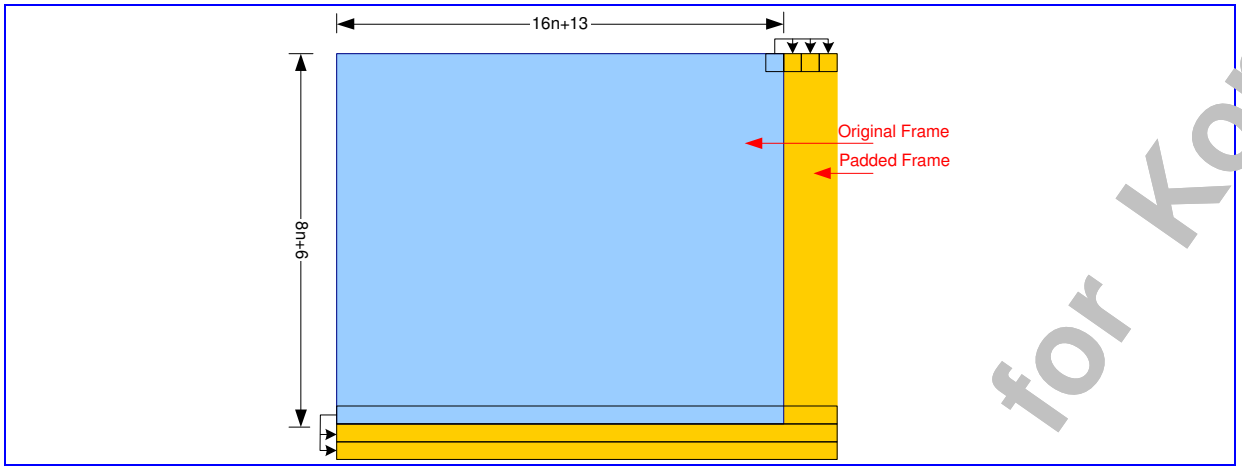

Figure 31 Frame Padding for YUV422 mode

6.15.1.1.4 Gray Mode

JPEG Encoder DMA also supports Gray Image JPEG Encoding. That is, only Y components are transmitted to JPEG Encoder for Encoding. For memory and bus bandwidth saving, U and V components are truncated before writing into buffer memory. As a result, the memory size in gray mode will be half of what it is in YUV422 mode.

Furthermore, the frame padding is a little different from that in normal mode. JPEG Encode DMA will construct the frame to the multiple of an 8 X 8 block instead of a 16 X 8 or 16 X 16 block in normal mode.

6.15.1.1.5 Auto-Restart

To overlap the Codec processing time with that of file system manipulations, an Auto-Restart mode is designed. JPEG Encoder DMA automatically restarts itself to receive next frame without being re-configured and re-enabled by MCU. This can enhance the Shot-to-Shot Delay performance a lot since the file system manipulations would take a long time. JPEG Encoder DMA will not stop transfer until it is disabled by MCU. Note that associated settings must be programmed in the Capture/Post Resize and other Image Engines as well.

6.15.1.2 Video Encode DMA

The main function of the Video Encode DMA is to move data from Capture Resize to Video Buffer. Video Buffer is used to contain YUV420 image data for MPEG4/H.263 codec. It consists of three continuous memory buffers for Y, U, and V component data.

For MPEG4/H.263 encoding, Video Encode DMA receives data from Capture Resize, and converts it into YUV420 format, and then writes into Y, U, V buffer separately. Software starts MPEG4/H.263 encoder after all of the frame data are ready.

6.15.1.2.1 Auto-Restart

To reduce MCU interrupt frequency, an Auto-Restart mode is designed. Video DMA automatically restarts itself to receive next frame without being re-configured and re-enabled by MCU. This can save a lot of MCU time since the MCU no longer needs to handle Image DMA at each frame boundary, which also makes the data stream smoother. Usually, double buffer scheme are employed to smooth video encoding. Therefore, the second base address register is provided in Video DMA to contain the second address. Video DMA automatically switches the base address between the two addresses at every restart. For the case of single buffer scheme, the two base address registers have to be programmed with the same address. Video DMA will not stop transfer until it is disabled by MCU. Note that associated settings must be programmed in Capture Resize and Image Engine as well.

MTK Confidential Release for Konka

6.15.1.3 Video Decode DMA

The main function of the Video Decode DMA is to move data from Video Buffer to Post Resize. Video Buffer is used to contain YUV420 image data after MPEG4/H.263 codec. It consists of three continuous memory buffers for Y, U, and V component data. Data format for the Post Resize is YUV444, and therefore color format conversion is needed during data movement.

For MPEG4/H.263 decoding, MPEG4/H.263 decoder writes out decoded data to video buffer, and Video Decode DMA is then triggered by software to move data to the Post Resize.

6.15.1.4 Image Buffer Write 1, 2 DMA

The main function of IBW1, IBW2 DMA is to move RGB data from Image Engine to memory or LCD, and the format of the written data is RGB565 or RGB888. IBW1 plays the role of saving the backup image. Whenever JPEG DMA, Video DMA, or IBW2 DMA is dumping images, IBW1 can be enabled to dump a backup image simultaneously. Besides, IBW1 also plays the role of writing local display under videophone scenario.

6.15.1.4.1 Auto-Restart

IBW1, IBW2 DMA can restart itself to receive next frame, and switch base address at every restart.

6.15.1.4.2 Hardware Handshake with LCD DMA

IBW1, IBW2 DMA issues interrupt along with the base address of the LCD buffer to LCD DMA at the end of frame transfer. LCD DMA could start moving data into LCD based on the signals.

The advantage of hardware handshaking is to reduce interrupts to MCU. This could make system more efficient.

6.15.1.4.3 Direct Couple to LCD DMA

A more efficient and memory saving way to move frame data to LCD is through Direct Couple Interface. The interface is between IBW1, IBW2 DMA and LCD, as depicted in , and consists of request, acknowledge, and 24-bit data bus. In this mode, frame data skips the frame buffer and are written to LCD directly. LCD updates the data on the fly.

However this mode cannot work in camera preview. This is because LCD update could halt for a long time, and therefore the next pixel data from the camera may not be captured in time. Thus, resulting in lost data.

6.15.1.4.4 Image Panning

IBW1, IBW2 DMA can grab a part of the image frame as a new image, as illustrated in . The advantage is that the system does not need to prepare a large piece of memory to store the entire image frame just to show a small portion of it. This can save memory usage, especially for large images. The detailed usage is shown in the register definition of IMGDMA_IBW2_CON, IMGDMA_IBW2_CON.

6.15.1.4.5 Destination Pitch

To write the memory, a pitch register is defined to indicate the memory address jump per line for each base address. This can save memory usage when writing a rectangular area of a LCD layer.

6.15.1.5 Image Buffer Write 3,4 DMA

The main function of IBW3 DMA is to move data from a Pixel Image Engine to the DRZ, and the format is YUV444 or RGB888. IBW3 provides the route for thumbnail image dumping. The main function of IBW4 DMA is to move data from a Pixel Image Engine to the PRZ, and the format is YUV444 or RGB888. IBW4 provides the route for preview scenario.

MTK Confidential Release for Konka

6.15.1.5.1 Auto-Restart

IBW3 DMA can restart itself to receive next frame.

6.15.1.6 Image Buffer Read 1 DMA

The main function of IBR1 DMA is to move RGB data from memory to Image Post Processor. The data format to Image Post Processor is RGB888 and the data formats from memory can be RGB565, RGB888 and BGR888 (which support BMP data format). The data placement in memory is illustrated in .

With IBR1 DMA, RGB image data in memory can be directly used for video encoding, JPEG encoding, and image panning.

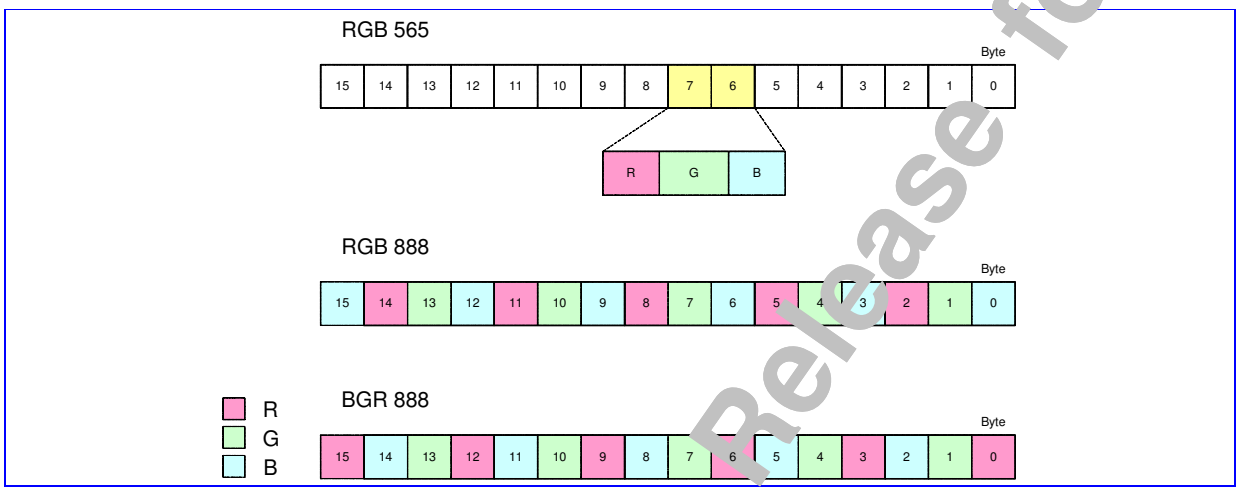

Figure 32 RGB data in memory

6.15.1.7 Image Buffer Read 2 DMA

The main function of IBR2 DMA is to read photo frame from memory, resize it to the capturing image size, look-up palette table and overlay it onto the capturing image. The photo frame mask data format can be 1, 2, 4, 8-bpp color index modes. A 256-entries in 24-bit YUV format palette provides a color index to color value lookup table.

6.15.1.7.1 Auto-Restart

IBR2 DMA can restart itself to read the same photo frame again and again while video capture scenario.

6.15.2 DMA Enabling Sequence

In general, the DMAs at the downstream of the data path must be enabled first. For instance, for Video capturing, the data path is Camera module → Capture Resize → Image Engine → Video DMA → Video Buffer. Video DMA has to be enabled before Image Processor, Capture Resize and Camera module.

The second example is video playback. The data path is Video Buffer → Video DMA → Post Resize → IPP Engine → IBW2 DMA → LCD frame buffer. IBW2 DMA has to be enabled before Post Resize and Image Engine and then Video DMA.

6.15.3 Register Definitions

Register Address	Register Function	Acronym
IMGDMA + 0000h	Image DMA Status Register	**IMGDMA_STA**

MTK Confidential Release for Konka

IMGDMA + 0004h	Image DMA Interrupt Acknowledge Register	**IMGDMA_ACKINT**
IMGDMA + 0100h	JPEG DMA Start Register	**IMGDMA_JPEG_STR**
IMGDMA + 0104h	JPEG DMA Control Register	**IMGDMA_JPEG_CON**
IMGDMA + 0108h	JPEG DMA Base Address Register	**IMGDMA_JPEG_BSADDR**
IMGDMA + 010Ch	JPEG DMA Horizontal Size Register	**IMGDMA_JPEG_HSIZE**
IMGDMA + 0110h	JPEG DMA Vertical Size Register	**IMGDMA_JPEG_VSIZE**
IMGDMA + 0114h	JPEG DMA FIFO Length Register	**IMGDMA_JPEG_FIFOLEN**
IMGDMA + 0118h	JPEG Write Pointer Register	**IMGDMA_JPEG_WRPTR**
IMGDMA + 011Ch	JPEG Write Horizontal Count Register	**IMGDMA_JPEG_WRHCNT**
IMGDMA + 0120h	JPEG Write Vertical Count Register	**IMGDMA_JPEG_WRVCNT**
IMGDMA + 0124h	JPEG Read Pointer Register	**IMGDMA_JPEG_RDPTR**
IMGDMA + 0128h	JPEG Read Horizontal Count Register	**IMGDMA_JPEG_RDHCNT**
IMGDMA + 012Ch	JPEG Read Vertical Count Register	**IMGDMA_JPEG_RDVCNT**
IMGDMA + 0130h	JPEG FIFO Line Count Register	**IMGDMA_JPEG_FFCNT**
IMGDMA + 0134h	JPEG FIFO Write Line Index Register	**IMGDMA_JPEG_FFWRLIDX**
IMGDMA + 0138h	JPEG FIFO Read Line Index Register	**IMGDMA_JPEG_FFRDLIDX**
IMGDMA + 0200h	Video Encode DMA Start Register	**IMGDMA_VDOENC_STR**
IMGDMA + 0204h	Video Encode DMA Control Register	**IMGDMA_VDOENC_CON**
IMGDMA + 0210h	Video Encode DMA Y Base Address 1 Register	**IMGDMA_VDOENC_Y_BASE1**
IMGDMA + 0214h	Video Encode DMA U Base Address 1 Register	**IMGDMA_VDOENC_U_BASE1**
IMGDMA + 0218h	Video Encode DMA V Base Address 1 Register	**IMGDMA_VDOENC_V_BASE1**
IMGDMA + 0220h	Video Encode DMA Y Base Address 2 Register	**IMGDMA_VDOENC_Y_BASE2**
IMGDMA + 0224h	Video Encode DMA U Base Address 2 Register	**IMGDMA_VDOENC_U_BASE2**
IMGDMA + 0228h	Video Encode DMA V Base Address 2 Register	**IMGDMA_VDOENC_V_BASE2**
IMGDMA + 0230h	Video Encode DMA Horizontal Size Register	**IMGDMA_VDOENC_HSIZE**
IMGDMA + 0234h	Video Encode DMA Vertical Size Register	**IMGDMA_VDOENC_VSIZE**
IMGDMA + 0238h	Video Encode DMA Horizontal Count Register	**IMGDMA_VDOENC_HCNT**
IMGDMA + 023Ch	Video Encode DMA Vertical Count Register	**IMGDMA_VDOENC_VCNT**
IMGDMA + 0280h	Video Decode DMA Start Register	**IMGDMA_VDODEC_STR**
IMGDMA + 0284h	Video Decode DMA Control Register	**IMGDMA_VDODEC_CON**
IMGDMA + 0290h	Video Decode DMA Y Base Address 1 Register	**IMGDMA_VDODEC_Y_BASE1**
IMGDMA + 0294h	Video Decode DMA U Base Address 1 Register	**IMGDMA_VDODEC_U_BASE1**
IMGDMA + 0298h	Video Decode DMA V Base Address 1 Register	**IMGDMA_VDODEC_V_BASE1**
IMGDMA + 02A0h	Video Decode DMA Y Base Address 2 Register	**IMGDMA_VDODEC_Y_BASE2**
IMGDMA + 02A4h	Video Decode DMA U Base Address 2 Register	**IMGDMA_VDODEC_U_BASE2**
IMGDMA + 02A8h	Video Decode DMA V Base Address 2 Register	**IMGDMA_VDODEC_V_BASE2**
IMGDMA + 02B0h	Video Decode DMA Horizontal Size Register	**IMGDMA_VDODEC_HSIZE**
IMGDMA + 02B4h	Video Decode DMA Vertical Size Register	**IMGDMA_VDODEC_VSIZE**
IMGDMA + 02B8h	Video Decode DMA Horizontal Count Register	**IMGDMA_VDODEC_HCNT**
IMGDMA + 02BCh	Video Decode DMA Vertical Count Register	**IMGDMA_VDODEC_VCNT**
IMGDMA + 0300h	Image Buffer Write DMA1 Start Register	**IMGDMA_IBW1_STR**
IMGDMA + 0304h	Image Buffer Write DMA1 Control Register	**IMGDMA_IBW1_CON**

MTK Confidential Release for Konka

IMGDMA + 0308h	Image Buffer Write DMA1 Base Address 1 Register	**IMGDMA_IBW1_BSADDR1**
IMGDMA + 030Ch	Image Buffer Write DMA1 Base Address 2 Register	**IMGDMA_IBW1_BSADDR2**
IMGDMA + 0310h	Image Buffer Write DMA1 Horizontal Size	**IMGDMA_IBW1_HSIZE**
IMGDMA + 0314h	Image Buffer Write DMA1 Vertical Size	**IMGDMA_IBW1_VSIZE**
IMGDMA + 0318h	Image Buffer Write DMA1 CLIP LR	**IMGDMA_IBW1_CLIPLR**
IMGDMA + 031Ch	Image Buffer Write DMA1 CLIP TB	**IMGDMA_IBW1_CLIPTB**
IMGDMA + 0320h	Image Buffer Write DMA1 Destination Pitch 1	**IMGDMA_IBW1_DPITCH1**
IMGDMA + 0324h	Image Buffer Write DMA1 Destination Pitch2	**IMGDMA_IBW1_DPITCH2**
IMGDMA + 0328h	Image Buffer Write DMA1 Horizontal Count	**IMGDMA_IBW1_HCNT**
IMGDMA + 032Ch	Image Buffer Write DMA1 Vertical Count	**IMGDMA_IBW1_VCNT**
IMGDMA + 0400h	Image Buffer Write DMA2 Start Register	**IMGDMA_IBW2_STR**
IMGDMA + 0404h	Image Buffer Write DMA2 Control Register	**IMGDMA_IBW2_CON**
IMGDMA + 0408h	Image Buffer Write DMA2 Base Address 1 Register	**IMGDMA_IBW2_BSADDR1**
IMGDMA + 040Ch	Image Buffer Write DMA2 Base Address 2 Register	**IMGDMA_IBW2_BSADDR2**
IMGDMA + 0410h	Image Buffer Write DMA2 Horizontal Size	**IMGDMA_IBW2_HSIZE**
IMGDMA + 0414h	Image Buffer Write DMA2 Vertical Size	**IMGDMA_IBW2_VSIZE**
IMGDMA + 0418h	Image Buffer Write DMA2 CLIP LR	**IMGDMA_IBW2_CLIPLR**
IMGDMA + 041Ch	Image Buffer Write DMA2 CLIP TB	**IMGDMA_IBW2_CLIPTB**
IMGDMA + 0420h	Image Buffer Write DMA2 Destination Pitch 1	**IMGDMA_IBW2_DPITCH1**
IMGDMA + 0424h	Image Buffer Write DMA2 Destination Pitch2	**IMGDMA_IBW2_DPITCH2**
IMGDMA + 0428h	Image Buffer Write DMA2 Horizontal Count	**IMGDMA_IBW2_HCNT**
IMGDMA + 042Ch	Image Buffer Write DMA2 Vertical Count	**IMGDMA_IBW2_VCNT**
IMGDMA + 0500h	Image Buffer Write DMA3 Start Register	**IMGDMA_IBW3_STR**
IMGDMA + 0504h	Image Buffer Write DMA3 Control Register	**IMGDMA_IBW3_CON**
IMGDMA + 0510h	Image Buffer Write DMA3 Horizontal Size	**IMGDMA_IBW3_HSIZE**
IMGDMA + 0514h	Image Buffer Write DMA3 Vertical Size	**IMGDMA_IBW3_VSIZE**
IMGDMA + 0528h	Image Buffer Write DMA3 Horizontal Count	**IMGDMA_IBW3_HCNT**
IMGDMA + 052Ch	Image Buffer Write DMA3 Vertical Count	**IMGDMA_IBW3_VCNT**
IMGDMA + 0580h	Image Buffer Write DMA4 Start Register	**IMGDMA_IBW4_STR**
IMGDMA + 0584h	Image Buffer Write DMA4 Control Register	**IMGDMA_IBW4_CON**
IMGDMA + 0590h	Image Buffer Write DMA4 Horizontal Size	**IMGDMA_IBW4_HSIZE**
IMGDMA + 0594h	Image Buffer Write DMA4 Vertical Size	**IMGDMA_IBW4_VSIZE**
IMGDMA + 05A8h	Image Buffer Write DMA4 Horizontal Count	**IMGDMA_IBW4_HCNT**
IMGDMA + 05ACh	Image Buffer Write DMA4 Vertical Count	**IMGDMA_IBW4_VCNT**
IMGDMA + 0600h	Image Buffer Read DMA1 Start Register	**IMGDMA_IBR1_STR**
IMGDMA + 0604h	Image Buffer Read DMA1 Control Register	**IMGDMA_IBR1_CON**
IMGDMA + 0608h	Image Buffer Read DMA1 Base Address Register	**IMGDMA_IBR1_BSADDR**
IMGDMA + 060Ch	Image Buffer Read DMA1 Number of Pixels	**IMGDMA_IBR1_PXLNUM**
IMGDMA + 0610h	Image Buffer Read DMA1 Remaining Pixels	**IMGDMA_IBR1_PXLCNT**
IMGDMA + 0700h	Image Buffer Read DMA2 Start Register	**IMGDMA_IBR2_STR**
IMGDMA + 0704h	Image Buffer Read DMA2 Control Register	**IMGDMA_IBR2_CON**
IMGDMA + 0708h	Image Buffer Read DMA2 Base Address Register	**IMGDMA_IBR2_BSADDR**

MTK Confidential Release for Konka

IMGDMA + 070Ch	Image Buffer Read DMA2 Configuration Register	**IMGDMA_IBR2_CFG**
IMGDMA + 0710h	Image Buffer Read DMA2 Horizontal Size	**IMGDMA_IBR2_HSIZE**
IMGDMA + 0714h	Image Buffer Read DMA2 Vertical Size	**IMGDMA_IBR2_VSIZE**
IMGDMA + 0718h	Image Buffer Read DMA2 Horizontal Count	**IMGDMA_IBR2_HCNT**
IMGDMA + 071Ch	Image Buffer Read DMA2 Vertical Count	**IMGDMA_IBR2_VCNT**
IMGDMA + 0800h IMGDMA + 0bfch	Image Buffer Read DMA2 Palette memory	**IMGDMA_PAL00~FF**

Table 53 Tracer Registers

IMGDMA+0000h Image DMA Status Register IMGDMA_STA

Bit	31	30	29	28	27	26	25	24	23	22	21	20	19	18	17	16
Name							IBW4 RUN	IBW3 RUN	IBR2 RUN	IBR1 RUN	IBW2 RUN	IBW1 RUN	VDODEC RUN	VDOENCR RUN	VDOENCW RUN	JPEG RUN
Type							RO	RO	RO	RO	RO	RO	RO	RO	RO	RO
Reset							0	0	0	0	0	0	0	0	0	0
Bit	15	14	13	12	11	10	9	8	7	6	5	4	3	2	1	0
Name							IBW4 IT	IBW3 IT	IBR 2IT	IBR1 IT	IBW2 IT	IBW1 IT	VDODEC IT	VDOENCR IT	VDOENCW IT	JPEG IT
Type							RO	RO	RO	RO	RO	RO	RO	RO	RO	RO
Reset							0	0	0	0	0	0	0	0	0	0

This register helps software program being well aware of the global status of Image DMA channels.

IT Interrupt status for DMA
- **2** No interrupt is generated.
- **3** An interrupt is pending and waiting for service.

RUN DMA status
- **0** DMA is stopped or has completed the transfer already.
- **1** DMA is currently running.

IMGDMA+0004h Image DMA Interrupt Acknowledge Register IMGDMA_ACKINT

Bit	31	30	29	28	27	26	25	24	23	22	21	20	19	18	17	16
Name																
Type																
Bit	15	14	13	12	11	10	9	8	7	6	5	4	3	2	1	0
Name							IBW4 ACK	IBW3 ACK	IBR2 ACK	IBR1 ACK	IBW2 ACK	IBW1 ACK	VDODEC ACK	VDOENCR ACK	VDOENCW ACK	JPEG ACK
Type							WO	WO	WO	WO	WO	WO	WO	WO	WO	WO

This register is used to acknowledge the current interrupt request associated with the completion event of a DMA channel by software program. Note that this is a write-only register, and any read to it will return a value of “0”.

ACK Interrupt acknowledge for the DMA channel
- **0** No effect
- **1** Interrupt request is acknowledged and should be relinquished.

MTK Confidential Release for Konka

IMGDMA+0100h JPEG DMA Start Register JPEG_STR

Bit	31	30	29	28	27	26	25	24	23	22	21	20	19	18	17	16
Name																
Type																
Reset																
Bit	15	14	13	12	11	10	9	8	7	6	5	4	3	2	1	0
Name																STR
Type																R/W
Reset																0

This register controls the activity of a DMA channel. Note that before setting STR to "1", all the configurations shall be done by giving proper values.

STR Start control for a DMA channel
- **0** stop DMA
- **1** activate DMA

IMGDMA+0104h JPEG DMA Control Register JPEG_CON

Bit	31	30	29	28	27	26	25	24	23	22	21	20	19	18	17	16
Name																
Type																
Reset																
Bit	15	14	13	12	11	10	9	8	7	6	5	4	3	2	1	0
Name									PSEL				AUTO RSTR	MODE 1	MODE 0	IT
Type									R/W				R/W	R/W	R/W	R/W
Reset									0				0	0	0	0

AUTO RSTR Automatic restart. JPEG Encoder DMA automatically restarts while current frame is finished.
- **0** Disable
- **1** Enable

MODE Interrupt Enabling
- **00** YUV422
- **01** Gray
- **10** YUV420
- **11** reserved

IT Interrupt Enabling
- **0** Disable
- **1** Enable

PSEL Pixel engine selection
- **0** Capture resize
- **1** Post resize

IMGDMA+0108h JPEG DMA Base Address Register JPEG_BSADDR

Bit	31	30	29	28	27	26	25	24	23	22	21	20	19	18	17	16
Name	ADDR[31:16]															
Type	R/W															
Bit	15	14	13	12	11	10	9	8	7	6	5	4	3	2	1	0
Name	ADR[15:0]															
Type	R/W															

MTK Confidential Release for Konka

ADDR Base address of the JPEG DMA FIFO.

IMGDMA+010Ch JPEG DMA Horizontal Size Register JPEG_HSIZE

Bit	31	30	29	28	27	26	25	24	23	22	21	20	19	18	17	16
Name																
Type																
Bit	15	14	13	12	11	10	9	8	7	6	5	4	3	2	1	0
Name	HSIZE															
Type	R/W															

HSIZE Horizontal dimension of image. 0 stands for 1 pixels, and n-1 stands for n pixels.

IMGDMA+0110h JPEG DMA Vertical Size Register JPEG_VSIZE

Bit	31	30	29	28	27	26	25	24	23	22	21	20	19	18	17	16
Name																
Type																
Bit	15	14	13	12	11	10	9	8	7	6	5	4	3	2	1	0
Name	VSIZE															
Type	R/W															

VSIZE Vertical dimension of image. 0 stands for 1 pixels, and n-1 stands for n pixels.

IMGDMA+0114h JPEG DMA FIFO Length Register JPEG_FIFOLEN

Bit	31	30	29	28	27	26	25	24	23	22	21	20	19	18	17	16
Name																
Type																
Bit	15	14	13	12	11	10	9	8	7	6	5	4	3	2	1	0
Name	FIFOLEN															
Type	R/W															

JPEG DMA FIFO Length must be the multiple of 8. The memory needed for a certain FIFO length is $\left\lceil \frac{HSIZE}{16} \right\rceil \times 16 \times FIFOLEN \times 2$ bytes for YUV422 mode, $\left\lceil \frac{HSIZE}{16} \right\rceil \times 16 \times FIFOLEN \times 3$ bytes for YUV420 mode, and $\left\lceil \frac{HSIZE}{8} \right\rceil \times 8 \times FIFOLEN$ bytes for gray mode.

FIFOLEN JPEG DMA FIFO Length. FIFOLEN must be the multiple of 8. recommended values are 24 for YUV422 mode, 16 for YUV420 mode, and 16 for gray mode.

IMGDMA+0118h JPEG Write Pointer Register JPEG_WRPTR

Bit	31	30	29	28	27	26	25	24	23	22	21	20	19	18	17	16
Name	WRPTR[31:16]															
Type	RO															
Bit	15	14	13	12	11	10	9	8	7	6	5	4	3	2	1	0
Name	WRPTR[15:0]															
Type	RO															

WRPTR Write pointer to display current writing address.

MTK Confidential Release for Konka

IMGDMA+011Ch JPEG Write Horizontal Count Register JPEG_WRHCNT

Bit	31	30	29	28	27	26	25	24	23	22	21	20	19	18	17	16
Name																
Type																
Bit	15	14	13	12	11	10	9	8	7	6	5	4	3	2	1	0
Name	WRHCNT															
Type	RO															

WRHCNT Displays the horizontal pixel count. This is a down-count counter. Hence this register reflects the remaining pixels of a line.

IMGDMA+0120h JPEG Write Vertical Count Register JPEG_WRVCNT

Bit	31	30	29	28	27	26	25	24	23	22	21	20	19	18	17	16
Name																
Type																
Bit	15	14	13	12	11	10	9	8	7	6	5	4	3	2	1	0
Name	WRVCNT															
Type	RO															

WRVCNT Displays the vertical pixel count. This is a down-count counter. Hence this register reflects the remaining lines.

IMGDMA+0124h JPEG Read Pointer Register JPEG_RDPTR

Bit	31	30	29	28	27	26	25	24	23	22	21	20	19	18	17	16
Name	RDPTR[31:16]															
Type	RO															
Bit	15	14	13	12	11	10	9	8	7	6	5	4	3	2	1	0
Name	RDPTR[15:0]															
Type	RO															

RDPTR Read pointer to display current reading address.

IMGDMA+0128h JPEG Read Horizontal Count Register JPEG_RDHCNT

Bit	31	30	29	28	27	26	25	24	23	22	21	20	19	18	17	16
Name																
Type																
Bit	15	14	13	12	11	10	9	8	7	6	5	4	3	2	1	0
Name	RDHCNT															
Type	RO															

RDHCNT Displays the horizontal pixel count. This is a down-count counter. Hence this register reflects the remaining pixels of a line.

IMGDMA+012Ch JPEG Read Vertical Count Register JPEG_RDVCNT

Bit	31	30	29	28	27	26	25	24	23	22	21	20	19	18	17	16
Name																
Type																
Bit	15	14	13	12	11	10	9	8	7	6	5	4	3	2	1	0
Name	RDVCNT															
Type	RO															

MTK Confidential Release for Konka

RDVCNT Displays the vertical pixel count. This is a down-count counter. Hence this register reflects the remaining lines.

IMGDMA+0130h JPEG FIFO Line Count Register JPEG_FFCNT

Bit	31	30	29	28	27	26	25	24	23	22	21	20	19	18	17	16
Name																
Type																
Bit	15	14	13	12	11	10	9	8	7	6	5	4	3	2	1	0
Name	FFCNT															
Type	RO															

FFCNT Displays the FIFO Line Count of JPEG FIFO.

IMGDMA+0134h JPEG Write Line Index Register JPEG_FFWRLIDX

Bit	31	30	29	28	27	26	25	24	23	22	21	20	19	18	17	16
Name																
Type																
Bit	15	14	13	12	11	10	9	8	7	6	5	4	3	2	1	0
Name	YIDX															
Type	RO															

YIDX Displays which FIFO line JPEG DMA is writing. YIDX = 1 ~ FIFOLEN.

IMGDMA+0138h JPEG Read Line Index Register JPEG_FFRDLIDX

Bit	31	30	29	28	27	26	25	24	23	22	21	20	19	18	17	16
Name																
Type																
Bit	15	14	13	12	11	10	9	8	7	6	5	4	3	2	1	0
Name	YIDX															
Type	RO															

YIDX Displays which FIFO line JPEG DMA is reading, YIDX = 1 ~ FIFOLEN.

IMGDMA+0200h Video Encode DMA Start Register VDOENC_STR

Bit	31	30	29	28	27	26	25	24	23	22	21	20	19	18	17	16
Name																
Type																
Reset																
Bit	15	14	13	12	11	10	9	8	7	6	5	4	3	2	1	0
Name																STR
Type																R/W
Reset																0

This register controls the activity of a DMA channel. Note that before setting STR to "1", all the configurations should be done by giving proper values.

STR Start control for a DMA channel
- **0** stop DMA
- **1** activate DMA

MTK Confidential Release for Konka

IMGDMA+0204h Video Encode DMA Control Register VDOENC_CON

Bit	31	30	29	28	27	26	25	24	23	22	21	20	19	18	17	16
Name																
Type																
Reset																
Bit	15	14	13	12	11	10	9	8	7	6	5	4	3	2	1	0
Name									PSEL	RSEL		AUTO RSTR	RD IT	W2R		WR IT
Type									R/W	R/W		R/W	R/W	R/W		R/W
Reset									0	0		0	0	0		0

WR IT WDMA Done Interrupt Enable. Interrupt issues when all of the transfers are done. For auto-restart mode, interrupt issues at every restart.

- **0** Disable
- **1** Enable

W2R WDMA hardware trigger to RDMA. While this function is enabled, Video Encode WDMA will write data to video buffer first, and then a start pulse will issue to Video Encode RDMA to read back from the same buffer. These data will pass through Resize to convert to LCD frame size.

- **0** Disable
- **1** Enable

RD IT RDMA Done Interrupt Enable.

- **0** Disable
- **1** Enable

AUTO RSTR Automatic restart. Video DMA automatically restarts while current frame is finished. Base address will be automatically switched between VDO_BSADD1 and VDO_BSADDR2. For single buffer application, please set VDO_BSADD1 and VDO_BSADDR2 with the same value.

- **0** Disable
- **1** Enable

RSEL RDMA output destination selection.

- **0** Post resize
- **1** Drop resize

PSEL WDMA input pixel engine selection

- **0** Capture resize
- **1** Post resize

IMGDMA+0210h Video Encode Y Base Address 1 Register VDOENC_Y_BASE1

Bit	31	30	29	28	27	26	25	24	23	22	21	20	19	18	17	16
Name	ADDR															
Type	R/W															
Bit	15	14	13	12	11	10	9	8	7	6	5	4	3	2	1	0
Name	ADDR															
Type	R/W															

ADDR First base address of video frame buffer.

IMGDMA+0214h Video Encode U Base Address 1 Register VDOENC_U_BASE1

Bit	31	30	29	28	27	26	25	24	23	22	21	20	19	18	17	16
Name	ADDR															

MTK Confidential Release for Konka

Type	R/W															
Bit	15	14	13	12	11	10	9	8	7	6	5	4	3	2	1	0
Name	ADDR															
Type	R/W															

ADDR First base address of video frame buffer.

IMGDMA+0218h Video Encode VBase Address 1 Register VDOENC_V_BASE1

Bit	31	30	29	28	27	26	25	24	23	22	21	20	19	18	17	16
Name	ADDR															
Type	R/W															
Bit	15	14	13	12	11	10	9	8	7	6	5	4	3	2	1	0
Name	ADDR															
Type	R/W															

ADDR First base address of video frame buffer.

IMGDMA+0220h Video Encode Y Base Address 2 Register VDOENC_Y_BASE2

Bit	31	30	29	28	27	26	25	24	23	22	21	20	19	18	17	16
Name	ADDR															
Type	R/W															
Bit	15	14	13	12	11	10	9	8	7	6	5	4	3	2	1	0
Name	ADDR															
Type	R/W															

ADDR Second base address of video frame buffer.

IMGDMA+0224h Video Encode U Base Address 2 Register VDOENC_U_BASE2

Bit	31	30	29	28	27	26	25	24	23	22	21	20	19	18	17	16
Name	ADDR															
Type	R/W															
Bit	15	14	13	12	11	10	9	8	7	6	5	4	3	2	1	0
Name	ADDR															
Type	R/W															

ADDR Second base address of video frame buffer.

IMGDMA+0228h Video Encode V Base Address 2 Register VDOENC_V_BASE2

Bit	31	30	29	28	27	26	25	24	23	22	21	20	19	18	17	16
Name	ADDR															
Type	R/W															
Bit	15	14	13	12	11	10	9	8	7	6	5	4	3	2	1	0
Name	ADDR															
Type	R/W															

ADDR Second base address of video frame buffer.

IMGDMA+0230h Video Encode Horizontal Size Register VDOENC_HSIZE

Bit	31	30	29	28	27	26	25	24	23	22	21	20	19	18	17	16
Name																
Type																

MTK Confidential Release for Konka

Bit	15	14	13	12	11	10	9	8	7	6	5	4	3	2	1	0
Name							SIZE									
Type							R/W									

SIZE Horizontal dimension of a video frame. 1 stands for 1 pixel, and n stands for n pixels. Note that the horizontal size must be multiple of 16.

IMGDMA+0234h Video Encode Vertical Size Register VDOENC_VSIZE

Bit	31	30	29	28	27	26	25	24	23	22	21	20	19	18	17	16
Name																
Type																
Bit	15	14	13	12	11	10	9	8	7	6	5	4	3	2	1	0
Name								SIZE								
Type								R/W								

SIZE Vertical dimension of a video frame. 1 stands for 1 pixel, and n stands for n pixels. Note that the vertical size must be multiple of 16.

IMGDMA+0238h Video Encode Horizontal Count Register VDOENC_HCNT

Bit	31	30	29	28	27	26	25	24	23	22	21	20	19	18	17	16
Name																
Type																
Bit	15	14	13	12	11	10	9	8	7	6	5	4	3	2	1	0
Name											COUNT					
Type											RO					

COUNT Horizontal pixel count. 1 stands for 1 pixel, and n stands for n pixels.

IMGDMA+023Ch Video Encode Vertical Count Register VDOENC_VCNT

Bit	31	30	29	28	27	26	25	24	23	22	21	20	19	18	17	16
Name																
Type																
Bit	15	14	13	12	11	10	9	8	7	6	5	4	3	2	1	0
Name								COUNT								
Type								RO								

COUNT Vertical pixel count. 1 stands for 1 pixel, and n stands for n pixels.

IMGDMA+0280h Video Decode DMA Start Register VDODEC_STR

Bit	31	30	29	28	27	26	25	24	23	22	21	20	19	18	17	16
Name																
Type																
Reset																
Bit	15	14	13	12	11	10	9	8	7	6	5	4	3	2	1	0
Name																STR
Type																R/W
Reset																0

This register controls the activity of a DMA channel. Note that before setting STR to "1", all the configurations should be done by giving proper values.

STR Start control for a DMA channel

MTK Confidential Release for Konka

0 stop DMA
1 activate DMA

IMGDMA+0284h Video Decode DMA Control Register VDODEC_CON

Bit	31	30	29	28	27	26	25	24	23	22	21	20	19	18	17	16
Name																
Type																
Reset																
Bit	15	14	13	12	11	10	9	8	7	6	5	4	3	2	1	0
Name																DONE IT
Type																R/W
Reset																0

DONE IT DMA Done Interrupt Enabling. Interrupt issues when all of the transfers are done. For auto-restart mode, interrupt issues at every restart.

0 Disable
1 Enable

IMGDMA+0290h Video Decode Y Base Address 1 Register VDODEC_Y_BASE1

Bit	31	30	29	28	27	26	25	24	23	22	21	20	19	18	17	16
Name	ADDR															
Type	R/W															
Bit	15	14	13	12	11	10	9	8	7	6	5	4	3	2	1	0
Name	ADDR															
Type	R/W															

ADDR First base address of video frame buffer.

IMGDMA+0294h Video Decode U Base Address 1 Register VDODEC_U_BASE1

Bit	31	30	29	28	27	26	25	24	23	22	21	20	19	18	17	16
Name	ADDR															
Type	R/W															
Bit	15	14	13	12	11	10	9	8	7	6	5	4	3	2	1	0
Name	ADDR															
Type	R/W															

ADDR First base address of video frame buffer.

IMGDMA+0298h Video Decode V Base Address 1 Register VDODEC_V_BASE1

Bit	31	30	29	28	27	26	25	24	23	22	21	20	19	18	17	16
Name	ADDR															
Type	R/W															
Bit	15	14	13	12	11	10	9	8	7	6	5	4	3	2	1	0
Name	ADDR															
Type	R/W															

ADDR First base address of video frame buffer.

MTK Confidential Release for Konka

IMGDMA+02A0h Video Decode Y Base Address 2 Register VDODEC_Y_BASE2

Bit	31	30	29	28	27	26	25	24	23	22	21	20	19	18	17	16
Name	ADDR															
Type	R/W															
Bit	15	14	13	12	11	10	9	8	7	6	5	4	3	2	1	0
Name	ADDR															
Type	R/W															

ADDR Second base address of video frame buffer.

IMGDMA+02A4h Video Decode U Base Address 2 Register VDODEC_U_BASE2

Bit	31	30	29	28	27	26	25	24	23	22	21	20	19	18	17	16
Name	ADDR															
Type	R/W															
Bit	15	14	13	12	11	10	9	8	7	6	5	4	3	2	1	0
Name	ADDR															
Type	R/W															

ADDR Second base address of video frame buffer.

IMGDMA+02A8h Video Decode V Base Address 2 Register VDODEC_V_BASE2

Bit	31	30	29	28	27	26	25	24	23	22	21	20	19	18	17	16
Name	ADDR															
Type	R/W															
Bit	15	14	13	12	11	10	9	8	7	6	5	4	3	2	1	0
Name	ADDR															
Type	R/W															

ADDR Second base address of video frame buffer.

IMGDMA+02B0h Video Decode Horizontal Size Register VDODEC_HSIZE

Bit	31	30	29	28	27	26	25	24	23	22	21	20	19	18	17	16
Name																
Type																
Bit	15	14	13	12	11	10	9	8	7	6	5	4	3	2	1	0
Name						SIZE										
Type						R/W										

SIZE Horizontal dimension of a video frame. 1 stands for 1 pixel, and n stands for n pixels. Note that the horizontal size must be multiple of 16.

IMGDMA+02B4h Video Decode Vertical Size Register VDODEC_VSIZE

Bit	31	30	29	28	27	26	25	24	23	22	21	20	19	18	17	16
Name																
Type																
Bit	15	14	13	12	11	10	9	8	7	6	5	4	3	2	1	0
Name								SIZE								
Type								R/W								

MTK Confidential Release for Konka

SIZE Vertical dimension of a video frame. 1 stands for 1 pixel, and n stands for n pixels. Note that the vertical size must be multiple of 16.

IMGDMA+02B8h Video Decode Horizontal Count Register VDODEC_HCNT

Bit	31	30	29	28	27	26	25	24	23	22	21	20	19	18	17	16
Name																
Type																
Bit	15	14	13	12	11	10	9	8	7	6	5	4	3	2	1	0
Name	COUNT															
Type	RO															

COUNT Horizontal pixel count. 1 stands for 1 pixel, and n stands for n pixels.

IMGDMA+02BCh Video Decode Vertical Count Register VDODEC_VCNT

Bit	31	30	29	28	27	26	25	24	23	22	21	20	19	18	17	16
Name																
Type																
Bit	15	14	13	12	11	10	9	8	7	6	5	4	3	2	1	0
Name								COUNT								
Type								RO								

COUNT Vertical pixel count. 1 stands for 1 pixel, and n stands for n pixels.

IMGDMA+0300h Image Buffer Write DMA1 Start Register IBW1_STR

Bit	31	30	29	28	27	26	25	24	23	22	21	20	19	18	17	16
Name																
Type																
Reset																
Bit	15	14	13	12	11	10	9	8	7	6	5	4	3	2	1	0
Name																STR
Type																R/W
Reset																0

This register controls the activity of a DMA channel. Note that before setting STR to "1", all the configurations should be done by giving proper value

STR Start control for a DMA channel

- **0** stop DMA
- **1** activate DMA

IMGDMA+0304h Image Buffer Write DMA1 Control Register IBW1_CON

Bit	31	30	29	28	27	26	25	24	23	22	21	20	19	18	17	16
Name																
Type																
Reset																
Bit	15	14	13	12	11	10	9	8	7	6	5	4	3	2	1	0
Name								PSEL1	PSEL0	888M	PAN	DC	AUTORSTR	LCD	PITCH	IT
Type								R/W	R/W	R/W	R/W	R/W	R/W	R/W	R/W	R/W
Reset								0	0	0	0	0	0	0	0	0

IT Interrupt Enabling

MTK Confidential Release for Konka

0 Disable
1 Enable

PITCH Destination pitch jump.
0 Disable
1 Enable

LCD Signaling LCD DMA. Frame ready signal is issued at the beginning of frames in Direct Couple mode, and is issued at the end of frames in Dual Buffer mode. Note that in the case of automatic restart plus direct couple mode, this function must be enabled to trigger LCD DMA.
0 Disable
1 Enable

AUTO RSTR Automatic restart. IBW2 DMA automatically restarts itself while current frame is finished.
0 Disable
1 Enable

DC Directly coupling to LCD DMA. Once this function is enabled, image data will dump to LCD DMA directly instead of dumping to LCD frame buffer.
0 Disable
1 Enable

PAN Picture panning. Once this function is enabled, only the pixels in the region specified by CLIP_L, CLIP_R, CLIP_T, and CLIP_B are dumped. The pan window is defined as **Figure 33**.

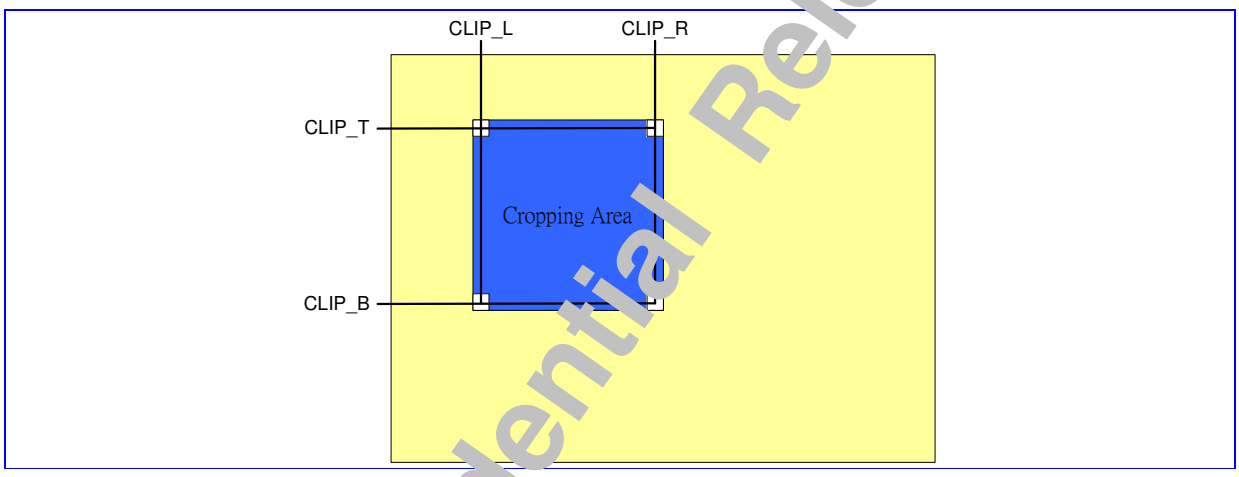

Figure 33 Picture Panning

0 Disable
1 Enable

888M Output format control
0 RGB565
1 RGB888

PSEL Pixel engine selection
00 IPP 1
01 IPP 2
10 Capture resize
11 Post resize

MTK Confidential Release for Konka

IMGDMA+0308h Image Buffer Write DMA1 Base Address 1 Register IBW1_BSADDR1

Bit	31	30	29	28	27	26	25	24	23	22	21	20	19	18	17	16
Name	ADDR															
Type	R/W															
Bit	15	14	13	12	11	10	9	8	7	6	5	4	3	2	1	0
Name	ADDR															
Type	R/W															

ADDR First base address of the LCD frame buffer.

IMGDMA+030Ch Image Buffer Write DMA1 Base Address 2 Register IBW1_BSADDR2

Bit	31	30	29	28	27	26	25	24	23	22	21	20	19	18	17	16
Name	ADDR															
Type	R/W															
Bit	15	14	13	12	11	10	9	8	7	6	5	4	3	2	1	0
Name	ADDR															
Type	R/W															

ADDR Second base address of the LCD frame buffer.

IMGDMA+0310h Image Buffer Write DMA1 Horizontal Size Register IBW1_HSIZE

Bit	31	30	29	28	27	26	25	24	23	22	21	20	19	18	17	16
Name																
Type																
Bit	15	14	13	12	11	10	9	8	7	6	5	4	3	2	1	0
Name	SIZE															
Type	R/W															

SIZE Horizontal size of a frame. 0 stands for 1 pixel, and n-1 stands for n pixels.

IMGDMA+0314h Image Buffer Write DMA1 Vertical Size Register IBW1_VSIZE

Bit	31	30	29	28	27	26	25	24	23	22	21	20	19	18	17	16
Name																
Type																
Bit	15	14	13	12	11	10	9	8	7	6	5	4	3	2	1	0
Name	SIZE															
Type	R/W															

SIZE Vertical size of a frame. 0 stands for 1 pixel, and n-1 stands for n pixels.

IMGDMA+0318h Image Buffer Write DMA1 Clip LR Register IBW1_CLIP_LR

Bit	31	30	29	28	27	26	25	24	23	22	21	20	19	18	17	16
Name																
Type																
Bit	15	14	13	12	11	10	9	8	7	6	5	4	3	2	1	0
Name	RIGHT															
Type	R/W															

LEFT Left boundary of a frame. 0 stands for the first pixel, and n-1 stands for the nth pixel.

RIGHT Right boundary of a frame. 0 stands for the first pixel, and n-1 stands for the nth pixel.

MTK Confidential Release for Konka

IMGDMA+031Ch Image Buffer Write DMA1 Clip TB Register IBW1_CLIP_TB

Bit	31	30	29	28	27	26	25	24	23	22	21	20	19	18	17	16
Name																
Type																
Bit	15	14	13	12	11	10	9	8	7	6	5	4	3	2	1	0
Name	BOTTOM															
Type	R/W															

TOP Top boundary of a frame. 0 stands for the first pixel, and n-1 stands for the nth pixel.

BOTTOM Bottom boundary of a frame. 0 stands for the first pixel, and n-1 stands for the nth pixel.

IMGDMA+0320h Image Buffer Write DMA1 Destination Pitch1 Register IBW1_DPITCH1

Bit	31	30	29	28	27	26	25	24	23	22	21	20	19	18	17	16
Name																
Type																
Bit	15	14	13	12	11	10	9	8	7	6	5	4	3	2	1	0
Name	PITCH															
Type	R/W															

PITCH Line pitch in bytes corresponds to IBW2_BSADDR1.

IMGDMA+0324h Image Buffer Write DMA1 Destination Pitch2 Register IBW1_DPITCH2

Bit	31	30	29	28	27	26	25	24	23	22	21	20	19	18	17	16
Name																
Type																
Bit	15	14	13	12	11	10	9	8	7	6	5	4	3	2	1	0
Name	PITCH															
Type	R/W															

PITCH Line pitch in bytes corresponds to IBW2_BSADDR1.

IMGDMA+0328h Image Buffer Write DMA1 Horizontal Count Register IBW1_HCNT

Bit	31	30	29	28	27	26	25	24	23	22	21	20	19	18	17	16
Name																
Type																
Bit	15	14	13	12	11	10	9	8	7	6	5	4	3	2	1	0
Name	CNT															
Type	RO															

CNT Horizontal pixel count. 0 stands for 1 pixel, and n-1 stands for n pixels.

IMGDMA+032Ch Image Buffer Write DMA1 Vertical Count Register IBW1_VCNT

Bit	31	30	29	28	27	26	25	24	23	22	21	20	19	18	17	16
Name																
Type																
Bit	15	14	13	12	11	10	9	8	7	6	5	4	3	2	1	0
Name	CNT															
Type	RO															

CNT Vertical line count. 0 stands for 1 line, and n-1 stands for n lines.

MTK Confidential Release for Konka

IMGDMA+0400h Image Buffer Write DMA2 Start Register IBW2_STR

Bit	31	30	29	28	27	26	25	24	23	22	21	20	19	18	17	16
Name																
Type																
Reset																
Bit	15	14	13	12	11	10	9	8	7	6	5	4	3	2	1	0
Name																STR
Type																R/W
Reset																0

This register controls the activity of a DMA channel. Note that before setting STR to "1", all the configurations should be done by giving proper value

STR Start control for a DMA channel
- **0** stop DMA
- **1** activate DMA

IMGDMA+0404h Image Buffer Write DMA2 Control Register IBW2_CON

Bit	31	30	29	28	27	26	25	24	23	22	21	20	19	18	17	16
Name																
Type																
Reset																
Bit	15	14	13	12	11	10	9	8	7	6	5	4	3	2	1	0
Name								PSEL 1	PSEL 0	888M	PAN	DC	AUTO RSTR	LCD	PITCH	IT
Type								R/W	R/W	R/W	R/W	R/W	R/W	R/W	R/W	R/W
Reset								0	0	0	0	0	0	0	0	0

IT Interrupt Enabling
- **0** Disable
- **1** Enable

PITCH Destination pitch jump.
- **0** Disable
- **1** Enable

LCD Signaling LCD DMA. Frame ready signal is issued at the beginning of frames in Direct Couple mode, and is issued at the end of frames in Dual Buffer mode. Note that in the case of automatic restart plus direct couple mode, this function must be enabled to trigger LCD DMA.
- **0** Disable
- **1** Enable

AUTO RSTR Automatic restart. IBW2 DMA automatically restarts itself while current frame is finished.
- **0** Disable
- **1** Enable

DC Directly coupling to LCD DMA. Once this function is enabled, image data will dump to LCD DMA directly instead of dumping to LCD frame buffer.
- **0** Disable
- **1** Enable

MTK Confidential Release for Konka

PAN Picture panning. Once this function is enabled, only the pixels in the region specified by HPITCH1, HPITCH2, VPITCH1, and VPITCH2 are dumped. The PITCHs are defined as **Figure 33**.

- **0** Disable
- **1** Enable

888M Output format control

- **0** RGB565
- **1** RGB888

PSEL Pixel engine selection

- **00** IPP 1
- **01** IPP 2
- **10** Capture resize
- **11** Post resize

IMGDMA+0408h Image Buffer Write DMA2 Base Address 1 Register IBW2_BSADDR1

Bit	31	30	29	28	27	26	25	24	23	22	21	20	19	18	17	16
Name	ADDR															
Type	R/W															
Bit	15	14	13	12	11	10	9	8	7	6	5	4	3	2	1	0
Name	ADDR															
Type	R/W															

ADDR First base address of the LCD frame buffer.

IMGDMA+040Ch Image Buffer Write DMA2 Base Address 2 Register IBW2_BSADDR2

Bit	31	30	29	28	27	26	25	24	23	22	21	20	19	18	17	16
Name	ADDR															
Type	R/W															
Bit	15	14	13	12	11	10	9	8	7	6	5	4	3	2	1	0
Name	ADDR															
Type	R/W															

ADDR Second base address of the LCD frame buffer.

IMGDMA+0410h Image Buffer Write DMA2 Horizontal Size Register IBW2_HSIZE

Bit	31	30	29	28	27	26	25	24	23	22	21	20	19	18	17	16
Name																
Type																
Bit	15	14	13	12	11	10	9	8	7	6	5	4	3	2	1	0
Name	SIZE															
Type	R/W															

SIZE Horizontal size of a frame. 0 stands for 1 pixel, and n-1 stands for n pixels.

IMGDMA+0414h Image Buffer Write DMA2 Vertical Size Register IBW2_VSIZE

Bit	31	30	29	28	27	26	25	24	23	22	21	20	19	18	17	16
Name																
Type																
Bit	15	14	13	12	11	10	9	8	7	6	5	4	3	2	1	0
Name	SIZE															

MTK Confidential Release for Konka

Type	R/W

SIZE Vertical size of a frame. 0 stands for 1 pixel, and n-1 stands for n pixels.

IMGDMA+0418h Image Buffer Write DMA2 Clip LR Register IBW2_CLIP_LR

Bit	31	30	29	28	27	26	25	24	23	22	21	20	19	18	17	16
Name																
Type																
Bit	15	14	13	12	11	10	9	8	7	6	5	4	3	2	1	0
Name	RIGHT															
Type	R/W															

LEFT Left boundary of a frame. 0 stands for the first pixel, and n-1 stands for the nth pixel.

RIGHT Right boundary of a frame. 0 stands for the first pixel, and n-1 stands for the nth pixel.

IMGDMA+041Ch Image Buffer Write DMA2 Clip TB Register IBW2_CLIP_TB

Bit	31	30	29	28	27	26	25	24	23	22	21	20	19	18	17	16
Name																
Type																
Bit	15	14	13	12	11	10	9	8	7	6	5	4	3	2	1	0
Name	BOTTOM															
Type	R/W															

TOP Top boundary of a frame. 0 stands for the first pixel, and n-1 stands for the nth pixel.

BOTTOM Bottom boundary of a frame. 0 stands for the first pixel, and n-1 stands for the nth pixel.

IMGDMA+0420h Image Buffer Write DMA2 Destination Pitch1 Register IBW2_DPITCH1

Bit	31	30	29	28	27	26	25	24	23	22	21	20	19	18	17	16
Name																
Type																
Bit	15	14	13	12	11	10	9	8	7	6	5	4	3	2	1	0
Name	PITCH															
Type	R/W															

PITCH Line pitch in bytes corresponds to IBW2_BSADDR1.

IMGDMA+0424h Image Buffer Write DMA2 Destination Pitch2 Register IBW2_DPITCH2

Bit	31	30	29	28	27	26	25	24	23	22	21	20	19	18	17	16
Name																
Type																
Bit	15	14	13	12	11	10	9	8	7	6	5	4	3	2	1	0
Name	PITCH															
Type	R/W															

PITCH Line pitch in bytes corresponds to IBW2_BSADDR1.

IMGDMA+0428h Image Buffer Write DMA2 Horizontal Count Register IBW2_HCNT

Bit	31	30	29	28	27	26	25	24	23	22	21	20	19	18	17	16
Name																
Type																
Bit	15	14	13	12	11	10	9	8	7	6	5	4	3	2	1	0

MTK Confidential Release for Konka

Name	CNT
Type	RO

CNT Horizontal pixel count. 0 stands for 1 pixel, and n-1 stands for n pixels.

IMGDMA+042Ch Image Buffer Write DMA2 Vertical Count Register IBW2_VCNT

Bit	31	30	29	28	27	26	25	24	23	22	21	20	19	18	17	16
Name																
Type																
Bit	15	14	13	12	11	10	9	8	7	6	5	4	3	2	1	0
Name	CNT															
Type	RO															

CNT Vertical line count. 0 stands for 1 line, and n-1 stands for n lines.

IMGDMA+0500h Image Buffer Write DMA3 Start Register IBW3_STR

Bit	31	30	29	28	27	26	25	24	23	22	21	20	19	18	17	16
Name																
Type																
Reset																
Bit	15	14	13	12	11	10	9	8	7	6	5	4	3	2	1	0
Name																STR
Type																R/W
Reset																0

This register controls the activity of a DMA channel. Note that before setting STR to "1", all the configurations should be done by giving proper value

STR Start control for a DMA channel

- **0** stop DMA
- **1** activate DMA

IMGDMA+0504h Image Buffer Write DMA3 Control Register IBW3_CON

Bit	31	30	29	28	27	26	25	24	23	22	21	20	19	18	17	16
Name																
Type																
Reset																
Bit	15	14	13	12	11	10	9	8	7	6	5	4	3	2	1	0
Name								PSEL 1	PSEL 0				AUTO RSTR			IT
Type								R/W	R/W				R/W			R/W
Reset								0	0				0			0

IT Interrupt Enabling

- **0** Disable
- **1** Enable

AUTO RSTR Automatic restart. IBW2 DMA automatically restarts itself while current frame is finished.

- **0** Disable
- **1** Enable

PSEL Pixel engine selection

- **00** IPP 1
- **01** IPP 2

MTK Confidential Release for Konka

10 Capture resize

11 Post resize

IMGDMA+0510h Image Buffer Write DMA3 Horizontal Size Register IBW3_HSIZE

Bit	31	30	29	28	27	26	25	24	23	22	21	20	19	18	17	16
Name																
Type																
Bit	15	14	13	12	11	10	9	8	7	6	5	4	3	2	1	0
Name	SIZE															
Type	R/W															

SIZE Horizontal size of a frame. 0 stands for 1 pixel, and n-1 stands for n pixels.

IMGDMA+0514h Image Buffer Write DMA3 Vertical Size Register IBW3_VSIZE

Bit	31	30	29	28	27	26	25	24	23	22	21	20	19	18	17	16
Name																
Type																
Bit	15	14	13	12	11	10	9	8	7	6	5	4	3	2	1	0
Name	SIZE															
Type	R/W															

SIZE Vertical size of a frame. 0 stands for 1 pixel, and n-1 stands for n pixels.

IMGDMA+0528h Image Buffer Write DMA3 Horizontal Count Register IBW3_HCNT

Bit	31	30	29	28	27	26	25	24	23	22	21	20	19	18	17	16
Name																
Type																
Bit	15	14	13	12	11	10	9	8	7	6	5	4	3	2	1	0
Name	CNT															
Type	RO															

CNT Horizontal pixel count. 0 stands for 1 pixel, and n-1 stands for n pixels.

IMGDMA+052Ch Image Buffer Write DMA3 Vertical Count Register IBW3_VCNT

Bit	31	30	29	28	27	26	25	24	23	22	21	20	19	18	17	16
Name																
Type																
Bit	15	14	13	12	11	10	9	8	7	6	5	4	3	2	1	0
Name	CNT															
Type	RO															

CNT Vertical line count. 0 stands for 1 line, and n-1 stands for n lines.

IMGDMA+0580h Image Buffer Write DMA4 Start Register IBW4_STR

Bit	31	30	29	28	27	26	25	24	23	22	21	20	19	18	17	16
Name																
Type																
Reset																
Bit	15	14	13	12	11	10	9	8	7	6	5	4	3	2	1	0
Name																STR
Type																R/W

MTK Confidential Release for Konka

Reset																0

This register controls the activity of a DMA channel. Note that before setting STR to "1", all the configurations should be done by giving proper value

STR Start control for a DMA channel

- **0** stop DMA
- **1** activate DMA

IMGDMA+0584h Image Buffer Write DMA4 Control Register IBW4_CON

Bit	31	30	29	28	27	26	25	24	23	22	21	20	19	18	17	16
Name																
Type																
Reset																
Bit	15	14	13	12	11	10	9	8	7	6	5	4	3	2	1	0
Name								PSEL 1	PSEL 0				AUTO RSTR			IT
Type								R/W	R/W				R/W			R/W
Reset								0	0				0			0

IT Interrupt Enabling

- **0** Disable
- **1** Enable

AUTO RSTR Automatic restart. IBW2 DMA automatically restarts itself while current frame is finished.

- **0** Disable
- **1** Enable

PSEL Pixel engine selection

- **00** IPP 1
- **01** IPP 2
- **10** Capture resize
- **11** Post resize

IMGDMA+0590h Image Buffer Write DMA4 Horizontal Size Register IBW4_HSIZE

Bit	31	30	29	28	27	26	25	24	23	22	21	20	19	18	17	16
Name																
Type																
Bit	15	14	13	12	11	10	9	8	7	6	5	4	3	2	1	0
Name	SIZE															
Type	R/W															

SIZE Horizontal size of a frame. 0 stands for 1 pixel, and n-1 stands for n pixels.

IMGDMA+0594h Image Buffer Write DMA4 Vertical Size Register IBW4_VSIZE

Bit	31	30	29	28	27	26	25	24	23	22	21	20	19	18	17	16
Name																
Type																
Bit	15	14	13	12	11	10	9	8	7	6	5	4	3	2	1	0
Name	SIZE															
Type	R/W															

SIZE Vertical size of a frame. 0 stands for 1 pixel, and n-1 stands for n pixels.

MTK Confidential Release for Konka

IMGDMA+05A8h Image Buffer Write DMA4 Horizontal Count Register IBW4_HCNT

Bit	31	30	29	28	27	26	25	24	23	22	21	20	19	18	17	16
Name																
Type																
Bit	15	14	13	12	11	10	9	8	7	6	5	4	3	2	1	0
Name	CNT															
Type	RO															

CNT Horizontal pixel count. 0 stands for 1 pixel, and n-1 stands for n pixels.

IMGDMA+05ACh Image Buffer Write DMA4 Vertical Count Register IBW4_VCNT

Bit	31	30	29	28	27	26	25	24	23	22	21	20	19	18	17	16
Name																
Type																
Bit	15	14	13	12	11	10	9	8	7	6	5	4	3	2	1	0
Name	CNT															
Type	RO															

CNT Vertical line count. 0 stands for 1 line, and n-1 stands for n lines.

IMGDMA+0600h Image Buffer Read DMA1 Start Register IBR1_STR

Bit	31	30	29	28	27	26	25	24	23	22	21	20	19	18	17	16
Name																
Type																
Reset																
Bit	15	14	13	12	11	10	9	8	7	6	5	4	3	2	1	0
Name																STR
Type																R/W
Reset																0

This register controls the activity of a DMA channel. Note that before setting STR to "1", all the configurations should be done by giving proper values.

STR Start control for a DMA channel
- **0** stop DMA
- **1** activate DMA

IMGDMA+0604h Image Buffer Read DMA1 Control Register IBR1_CON

Bit	31	30	29	28	27	26	25	24	23	22	21	20	19	18	17	16
Name																
Type																
Reset																
Bit	15	14	13	12	11	10	9	8	7	6	5	4	3	2	1	0
Name														ORDER	FMT	IT
Type														R/W	R/W	R/W
Reset														0	0	0

IT Interrupt Enabling
- **0** Disable
- **1** Enable

MTK Confidential Release for Konka

FMT Data format

- **0** RGB565
- **1** RGB888

ORDER Data order

- **0** BGR888, from MSB to LSB.
- **1** RGB888, from MSB to LSB.

IMGDMA+0608h Image Buffer Read DMA1 Base Address Register IBR1_BSADDR

Bit	31	30	29	28	27	26	25	24	23	22	21	20	19	18	17	16
Name	ADDR															
Type	R/W															
Bit	15	14	13	12	11	10	9	8	7	6	5	4	3	2	1	0
Name	ADDR															
Type	R/W															

ADDR Base address of the image buffer.

IMGDMA+060Ch Image Buffer Read DMA1 Number of Pixels Register IBR1_PXLNUM

Bit	31	30	29	28	27	26	25	24	23	22	21	20	19	18	17	16
Name	NUM															
Type	R/W															
Bit	15	14	13	12	11	10	9	8	7	6	5	4	3	2	1	0
Name	NUM															
Type	R/W															

NUM Number of pixels of the transferred image. 0 represents 1 pixel, and n-1 represents n pixels.

IMGDMA+0610h Image Buffer Read DMA1 Remaining Pixels Register IBR1_PXLCNT

Bit	31	30	29	28	27	26	25	24	23	22	21	20	19	18	17	16
Name	COUNT															
Type	RO															
Bit	15	14	13	12	11	10	9	8	7	6	5	4	3	2	1	0
Name	COUNT															
Type	RO															

COUNT Pixel count. 0 represents 1 pixel, and n-1 represents n pixels.

IMGDMA+0700h Image Buffer Read DMA2 Start Register IBR2_STR

Bit	31	30	29	28	27	26	25	24	23	22	21	20	19	18	17	16
Name																
Type																
Reset																
Bit	15	14	13	12	11	10	9	8	7	6	5	4	3	2	1	0
Name																STR
Type																R/W
Reset																0

This register controls the activity of a DMA channel. Note that before setting STR to "1", all the configurations should be done by giving proper values.

STR Start control for a DMA channel

MTK Confidential Release for Konka

0 stop DMA
1 activate DMA

IMGDMA+0704h Image Buffer Read DMA2 Control Register IBR2_CON

Bit	31	30	29	28	27	26	25	24	23	22	21	20	19	18	17	16
Name																
Type																
Reset																
Bit	15	14	13	12	11	10	9	8	7	6	5	4	3	2	1	0
Name									PSEL			PALEN	AUTORSTR	MODE1	MODE0	IT
Type									R/W			R/W	R/W	R/W	R/W	R/W
Reset									0			0	0	0	0	0

IT Interrupt Enabling
0 Disable
1 Enable

MODE Interrupt Enabling
00 1-bpp mode
01 2-bpp mode
10 4-bpp mode
11 8-bpp mode

AUTO RSTR Automatic restart. IBR2 DMA automatically restarts itself while current frame is finished.
0 Disable
1 Enable

PALEN Photo frame palette Enabling. Please set this bit before any operation with the palette memory.
0 Disable.
1 Enable.

PSEL Pixel engine selection
0 Capture Resize.
1 Post Resize.

IMGDMA+0708h Image Buffer Read DMA2 Base Address Register IBR2_BSADDR

Bit	31	30	29	28	27	26	25	24	23	22	21	20	19	18	17	16
Name	ADDR															
Type	R/W															
Bit	15	14	13	12	11	10	9	8	7	6	5	4	3	2	1	0
Name	ADDR															
Type	R/W															

ADDR Base address of the photo frame.

IMGDMA+070Ch Image Buffer Read DMA2 Configuration Register IBR2_CFG

Bit	31	30	29	28	27	26	25	24	23	22	21	20	19	18	17	16
Name																
Type																
Bit	15	14	13	12	11	10	9	8	7	6	5	4	3	2	1	0
Name	KEY								VRATIO				HRATIO			
Type	R/W								R/W				R/W			

MTK Confidential Release for Konka

KEY Transparent color key for overlay function.

VRATIO Horizontal scaling ratio.

HRATIO Vertical scaling ratio.

IMGDMA+0710h Image Buffer Read DMA2 Horizontal Size Register IBR2_HSIZE

Bit	31	30	29	28	27	26	25	24	23	22	21	20	19	18	17	16
Name																
Type																
Bit	15	14	13	12	11	10	9	8	7	6	5	4	3	2	1	0
Name	SIZE															
Type	R/W															

SIZE Horizontal size of the photo frame.

IMGDMA+0714h Image Buffer Read DMA2 Vertical Size Register IBR2_VSIZE

Bit	31	30	29	28	27	26	25	24	23	22	21	20	19	18	17	16
Name																
Type																
Bit	15	14	13	12	11	10	9	8	7	6	5	4	3	2	1	0
Name	SIZE															
Type	R/W															

SIZE Vertical size of the photo frame.

IMGDMA+0718h Image Buffer Read DMA2 Horizontal Count Register IBR2_HCNT

Bit	31	30	29	28	27	26	25	24	23	22	21	20	19	18	17	16
Name																
Type																
Bit	15	14	13	12	11	10	9	8	7	6	5	4	3	2	1	0
Name	CNT															
Type	RO															

CNT Horizontal pixel count. 0 stands for 1 pixel, and n-1 stands for n pixels.

IMGDMA+071Ch Image Buffer Read DMA2 Vertical Count Register IBR2_VCNT

Bit	31	30	29	28	27	26	25	24	23	22	21	20	19	18	17	16
Name																
Type																
Bit	15	14	13	12	11	10	9	8	7	6	5	4	3	2	1	0
Name	CNT															
Type	RO															

CNT Vertical line count. 0 stands for 1 line, and n-1 stands for n lines.

IMGDMA+0800h ~ IMGDMA+0BFCh Image Buffer Read DMA2 Palette Register 00~FF IMGDMA_PAL00 ~FF

Bit	31	30	29	28	27	26	25	24	23	22	21	20	19	18	17	16
Name									COLOR							

MTK Confidential Release for Konka

Type									R/W							
Bit	15	14	13	12	11	10	9	8	7	6	5	4	3	2	1	0
Name	COLOR															
Type	R/W															

COLOR [23:0] Palette entry color value in YUV format.

6.16 Image Engine

The Image Engine is used to manipulate image adjustments and a variety of filtering effects. It works inside the DMA architecture, which minimizes the intervention of the CPU. The engine can directly access the external and internal memories and provide a large extent of flexibility for system performance consideration.

The function of the engine basically contains two categories: pixel adjustment and filtering effect.

Pixel adjustment includes brightness, contrast, and hue adjustment, color adjustment, and gamma correction. These effects are integrated on both the encoding and decoding path of image and video material. It can provide on-the-fly manipulation on these raw materials. For camera preview and capture, it can perform the effects on the incoming image frame immediately, and output to both frame buffer for display and image buffer for image compression. For video playback, it can perform the effects on the decoded frame immediately and output to the frame buffer for display.

The filtering effect includes linear and non-linear (ranking) effects. The linear filtering provides blur and sharpening effects with programmable mask design. The non-linear filtering provides ranking filter to emulate noise reduction, dilation and erosion effects. We can also implement other artistic effects by performing multi-pass filtering with combination of a variety of effects.

The image Engine includes three independent sub image engines. The first sub image engine, IPP1, is in charge of the main functions of the engine (pixel adjustment and filtering effect). The second sub image engine, IPP2, only performs YUV to RGB color conversion. This sub engine can be used to output the RGB data in the image compression or videophone. The third sub image engine, IPP3, mainly performs RGB to YUV color space conversion and then output to Post Resizer.

6.16.1 Register Definitions

Register Address	Register Function	Acronym
IMG+0000h	Image flow control register	**IMGPROC_IMAGE_CON**
IMG+0004h	Control register	**IMGPROC_CON**
IMG+0008h	Interrupt enable register	**IMGPROC_INTREN**
IMG+000Ch	Interrupt status register	**IMGPROC_INTR**
IMG+0010h	Status register	**IMGPROC_STATUS**
IMG+0100h	Hue adjustment coefficient C11	**IMGPROC_HUE11**
IMG+0104h	Hue adjustment coefficient C12	**IMGPROC_HUE12**
IMG+0108h	Hue adjustment coefficient C21	**IMGPROC_HUE21**
IMG+010Ch	Hue adjustment coefficient C22	**IMGPROC_HUE22**
IMG+0110h	Saturation adjustment coefficient	**IMGPROC_SAT**
IMG+0120h	Brightness adjustment coefficient B1	**IMGPROC_BRIADJ1**
IMG+0124h	Brightness adjustment coefficient B2	**IMGPROC_BRIADJ2**
IMG+0128h	Contrast adjustment coefficient	**IMGPROC_CONADJ**

MTK Confidential Release for Konka

IMG+0130h	Colorize effect coefficient	**IMGPROC_COLORIZEU**
IMG+0134h	Colorize effect coefficient	**IMGPROC_COLORIZEV**
IMG+0140h	Mask coefficient C11	**IMGPROC_MASK11**
IMG+0144h	Mask coefficient C12	**IMGPROC_MASK12**
IMG+0148h	Mask coefficient C13	**IMGPROC_MASK13**
IMG+014Ch	Mask coefficient C21	**IMGPROC_MASK21**
IMG+0150h	Mask coefficient C22	**IMGPROC_MASK22**
IMG+0154h	Mask coefficient C23	**IMGPROC_MASK23**
IMG+0158h	Mask coefficient C31	**IMGPROC_MASK31**
IMG+015Ch	Mask coefficient C32	**IMGPROC_MASK32**
IMG+0160h	Mask coefficient C33	**IMGPROC_MASK33**
IMG+0164h	Mask down-scaling coefficient	**IMGPROC_SCALE**
IMG+0170h	Gamma correction offset for segment 0	**IMGPROC_GAMMA_OFF0**
IMG+0174h	Gamma correction offset for segment 1	**IMGPROC_GAMMA_OFF1**
IMG+0178h	Gamma correction offset for segment 2	**IMGPROC_GAMMA_OFF2**
IMG+017Ch	Gamma correction offset for segment 3	**IMGPROC_GAMMA_OFF3**
IMG+0180h	Gamma correction offset for segment 4	**IMGPROC_GAMMA_OFF4**
IMG+0184h	Gamma correction offset for segment 5	**IMGPROC_GAMMA_OFF5**
IMG+0188h	Gamma correction offset for segment 6	**IMGPROC_GAMMA_OFF6**
IMG+018Ch	Gamma correction offset for segment 7	**IMGPROC_GAMMA_OFF7**
IMG+0190h	Gamma correction slope for segment 0	**IMGPROC_GAMMA_SLP0**
IMG+0194h	Gamma correction slope for segment 1	**IMGPROC_GAMMA_SLP1**
IMG+0198h	Gamma correction slope for segment 2	**IMGPROC_GAMMA_SLP2**
IMG+019Ch	Gamma correction slope for segment 3	**IMGPROC_GAMMA_SLP3**
IMG+01A0h	Gamma correction slope for segment 4	**IMGPROC_GAMMA_SLP4**
IMG+01A4h	Gamma correction slope for segment 5	**IMGPROC_GAMMA_SLP5**
IMG+01A8h	Gamma correction slope for segment 6	**IMGPROC_GAMMA_SLP6**
IMG+01ACh	Gamma correction slope for segment 7	**IMGPROC_GAMMA_SLP7**
IMG+01B0h	Gamma correction control register	**IMGPROC_GAMMA_CON**
IMG+0200h	Color adjustment offset x for red segment 1	**IMGPROC_COLOR1R_OFFX**
IMG+0204h	Color adjustment offset x for red segment 2	**IMGPROC_COLOR2R_OFFX**
IMG+0208h	Color adjustment offset x for green segment 1	**IMGPROC_COLOR1G_OFFX**
IMG+020Ch	Color adjustment offset x for green segment 2	**IMGPROC_COLOR2G_OFFX**
IMG+0210h	Color adjustment offset x for blue segment 1	**IMGPROC_COLOR1B_OFFX**
IMG+0214h	Color adjustment offset x for blue segment 2	**IMGPROC_COLOR2B_OFFX**
IMG+0220h	Color adjustment offset y for red segment 1	**IMGPROC_COLOR1R_OFFY**
IMG+0224h	Color adjustment offset y for red segment 2	**IMGPROC_COLOR2R_OFFY**
IMG+0228h	Color adjustment offset y for green segment 1	**IMGPROC_COLOR1G_OFFY**
IMG+022Ch	Color adjustment offset y for green segment 2	**IMGPROC_COLOR2G_OFFY**
IMG+0230h	Color adjustment offset y for blue segment 1	**IMGPROC_COLOR1B_OFFY**
IMG+0234h	Color adjustment offset y for blue segment 2	**IMGPROC_COLOR2B_OFFY**
IMG+0240h	Color adjustment slope for red segment 0	**IMGPROC_COLOR1G_SLP**

MTK Confidential for Konka

IMG+0244h	Color adjustment slope for red segment 1	**IMGPROC_COLOR1G_SLP**
IMG+0248h	Color adjustment slope for red segment 2	**IMGPROC_COLOR2G_SLP**
IMG+0250h	Color adjustment slope for red segment 0	**IMGPROC_COLOR1G_SLP**
IMG+0254h	Color adjustment slope for red segment 1	**IMGPROC_COLOR1G_SLP**
IMG+0258h	Color adjustment slope for red segment 2	**IMGPROC_COLOR2G_SLP**
IMG+0260h	Color adjustment slope for red segment 0	**IMGPROC_COLOR1G_SLP**
IMG+0264h	Color adjustment slope for red segment 1	**IMGPROC_COLOR1G_SLP**
IMG+0268h	Color adjustment slope for red segment 2	**IMGPROC_COLOR2G_SLP**
IMG+0304h	Image frame width register	**IMGPROC_IMGWIDTH**
IMG+0308h	Image frame height register	**IMGPROC_IMGHEIGHT**
IMG+030Ch	Image frame source start address	**IMGPROC_ADDR_SRC**
IMG+0310h	Image frame destination start address	**IMGPROC_ADDR_DST**
IMG+0314h	Image frame filtering dummy pixel	**IMGPROC_DUMMYPXL**
IMG+0318h	RGB to YUV source select	**IMGPROC_R2Y_SRC**
IMG+031Ch	Thumbnail output enable	**IMGPROC_TNL_EN**
IMG+0320h	Image engine process enable	**IMGPROC_EN**

Table 54 Image Engine Registers

IMG+0000h Image Engine image flow control register

IMGPROC_IMAGE_CON

Bit	15	14	13	12	11	10	9	8	7	6	5	4	3	2	1	0
Name	GMODE				MASK				RGB	GMA	CLR	INV	CBA	HSA		
Type	R/W				R/W				R/W	R/W	R/W	R/W	R/W	R/W		
Reset	0				0				0	0	0	0	0	0		

This register is used to define which effects are to be applied on the video stream or on the stand-alone image. The user can simply set this register to 0 if intended to bypass Image Engine.

The MSB 4 bits controls the operating mode and image flow of the engine. They should be set prior to enabling the respective functions; and when all are equal to 0, no operation will take effect.

The MASK field defines which mask filtering effect is to be applied. The RGB format (565/888) of image data can be both supported by the RGB control bit. The effects comprise of linear and non-linear effects. Some linear effects, such as Low-pass, High-pass, un-sharpening effects, should be associated with the mask table; therefore the user should program the mask coefficients. The LP (low-pass) filter provides smoothing effects. Since it is supposed to get un-biased data, the convolution will be normalized to its original intensity. The HP (high-pass) filter, which provides sharpening effects, does not necessarily produce un-biased data. We provide two HP filters, one with scaling factor and the other without. Depending on what mask type is defined, the result may reveal only edge information or may keep the average intensity to achieve the sharpening effects. We recommend using symmetrical form of mask.

In addition to 3x3 masks, 5x5 and 7x7 masks are also provided. But only the blur effects are provided for the later two effects. The user does not have to program the mask coefficients.

The LSB 7 bits controls all the pixel adjustment effect.

For gamma correction and color adjustment, which are to be performed on RGB color space, the Image Engine provides piece-wise linear programming mechanism. The user should know the slope and offset of respective segments.

MTK Confidential Release for Konka

Color invert effect, performed on YUV or RGB color spaces, provides negative film effects.

Contrast and brightness, hue and saturation effects are to be performed on YUV color space. Although, the user can also do post-processing on the image prepared in RGB form. The Image Engine can convert it into YUV space for those operations.

GMODE Graph mode. The field defines the image flow in each case.

- **1000** ***Image Encode mode.*** (RGB to YUV) In this mode, the Image Engine performs the color space conversion from RGB color space to YUV color space. This mode is mainly used in image encoding, such as JPEG encoding. IPP2 path can be enabled to support the thumbnail RGB data format. In this mode, we assume no image effects are to be applied.
- **0101** ***IMGPROC mode.*** (RGB to YUV and YUV to RGB) In this mode, the Image Engine applies image effects on the stand-alone image. The data source and destination is supposed to be in RGB color space. In this mode, the user should program image size and related information on image DMA. The image DMA retrieves image, performs image effects on Image Engine, and then writes to the memory. This mode can also apply on GIF/PNG decoding.
- **0011** ***MPEG mode.*** (YUV to RGB) In this mode, the image is converted from YUV color space to RGB color space in video showing. This mode is mainly used for video mode.
- **0010** ***Capture mode.*** (YUV to RGB and YUV to RGB) In this mode, the captured image in YUV color space and performed color space conversion for thumbnail output. This mode is mainly used for image capture. This mode can be applied on videophone mode. Thumbnail path can be enabled.
- **0001** ***Preview mode.*** (YUV to RGB) In this mode, the Image Engine performs the color space conversion from YUV color space to RGB color space. This mode is mainly used for preview, image playback.

MASK Mask filtering effect enabling control. (Source and destination image are both in memory)

- **0101** Linear LP (low-pass) filtering effect enable. Mask coefficients required.
- **0110** Linear HP (high-pass) filtering effect enable. Mask coefficients required.
- **0111** Linear HP filtering (with scale down) effect enable. Mask coefficients required.
- **1001** Blur effect enable. (5x5 mask)
- **1010** More blur effect enable. (7x7 mask)
- **1011** Un-sharp mask effect enable. Mask coefficients required.
- **1100** Maximum ranking (dilation) filter effect enable
- **1101** Median ranking filter effect enable
- **1110** Minimum ranking (erosion) filter effect enable

RGB RGB565/888 selection for filter path (only for filtering effect)

- **0** RGB565
- **1** RGB888

GMA Gamma correction enable bit

CLR Color adjustment enable bit

INV Color invert enable bit

CBA Contrast and brightness adjustment enable bit

HSA Hue and saturation adjustment enable

- **001** Gray-scale effect enable
- **010** Colorize effect enable
- **101** Hue adjustment enable
- **110** Saturation adjustment enable
- **111** Hue and saturation adjustment enable

IMG+0004h Mask filtering Control register IMGPROC_CON

Bit	15	14	13	12	11	10	9	8	7	6	5	4	3	2	1	0

MTK Confidential Release for Konka

Name												INIT			STOP	START
Type												WO			WO	WO
Reset												0			0	0

This register is used to control the filtering process and coefficients setting.

INIT Writing logic-1 resets hue, saturation, brightness, and contrast adjusting coefficients. The flag is write-only.

STOP Writing logic-1 stops the image filter processing. The flag is write-only.

START Writing logic-1 starts the image filter processing. The flag is write-only.

IMG+0008h Interrupt enable register IMGPROC_INTREN

Bit	15	14	13	12	11	10	9	8	7	6	5	4	3	2	1	0
Name																EN
Type																R/W
Reset																0

This register is the interrupt enable control register. To enable the interrupt, the flag should be set to be 1.

EN Interrupt enable flag.

IMG +000Ch Interrupt status register IMGPROC_INTR

Bit	15	14	13	12	11	10	9	8	7	6	5	4	3	2	1	0
Name																INTR
Type																RC
Reset																0

This register is the interrupt status register. The core set the flag to be 1 to represent the interrupt is asserted. Reading this register will clear the interrupt.

INTR Interrupt status flag. The flag is read-clear.

IMG +0010h Status register IMGPROC_STS

Bit	15	14	13	12	11	10	9	8	7	6	5	4	3	2	1	0
Name																BUSY
Type																RO
Reset																0

This register is the status register. The user could poll this register to see if the filtering process is ready or not. The flag is read-only.

BUSY Filtering is in process.

IMG+0100h Hue adjustment coefficient C11 IMGPROC_HUE11

Bit	15	14	13	12	11	10	9	8	7	6	5	4	3	2	1	0
Name									C11							
Type									R/W							
Reset									40h							

IMG+0104h Hue adjustment coefficient C12 IMGPROC_HUE12

Bit	15	14	13	12	11	10	9	8	7	6	5	4	3	2	1	0
Name									C12							
Type									R/W							
Reset									0							

MTK Confidential Release for Konka

IMG+0108h Hue adjustment coefficient C21

IMGPROC_HUE21

Bit	15	14	13	12	11	10	9	8	7	6	5	4	3	2	1	0
Name									C21							
Type									R/W							
Reset									0							

IMG+010Ch Hue adjustment coefficient C22

IMGPROC_HUE22

Bit	15	14	13	12	11	10	9	8	7	6	5	4	3	2	1	0
Name									C22							
Type									R/W							
Reset									40h							

This register controls the parameter of hue adjustment for the image. The effect is performed on the U and V component of YUV color space. The user should specify the coefficients that form the transformation matrix. The formula is listed as follows:

$$\begin{bmatrix} u_0 \\ v_o \end{bmatrix} = \begin{bmatrix} C11 & C12 \\ C21 & C22 \end{bmatrix} \cdot \begin{bmatrix} u_i \\ v_i \end{bmatrix}$$

$$where \quad C11 = 64\cos\theta, \quad C12 = 64\sin\theta, \quad C21 = -64\sin\theta, \quad C22 = 64\cos\theta$$

The coefficients are in 2's complement format and range from C0h to 40h (from –64 to 64 in decimal, while 64 is normalized to 1 corresponding to cosine values). Any value beyond this range is invalid.

For example, to rotate the color space counterclockwise by 30 degree, the coefficients should be 37h, 20h, e0h, and 37h.

C11 The coefficient C11 of the transformation matrix in 2's complement format.
C12 The coefficient C12 of the transformation matrix in 2's complement format.
C21 The coefficient C21 of the transformation matrix in 2's complement format.
C22 The coefficient C22 of the transformation matrix in 2's complement format.

IMG+0110h Saturation adjustment coefficient

IMGPROC_SATADJ

Bit	15	14	13	12	11	10	9	8	7	6	5	4	3	2	1	0
Name										SAT						
Type										R/W						
Reset										20h						

This register defines the parameter of saturation adjustment for the image. The basics of saturation tuning is to multiply the U and V component by a scaling factor, which could range from 0 to 127, to degrade or enhance the strength on color components. Setting to 20h represents no scaling.

SAT Saturation coefficient.

IMG+0120h Brightness adjustment coefficient B1

IMGPROC_BRIADJ1

Bit	15	14	13	12	11	10	9	8	7	6	5	4	3	2	1	0
Name									BRI							
Type									R/W							
Reset									0							

MTK Confidential Release for Konka

This register defines the parameter of brightness adjustment for the image. The parameter is in unsigned format. Setting the value to be greater than 0 adds to the intensity of the image pixel. In terms of transfer curve, it represents the offset in the y-axis. The valid value ranges from 0 to 255.

BRI Brightness adjustment coefficient.

IMG+0124h Brightness adjustment coefficient B2

IMGPROC_BRIADJ2

Bit	15	14	13	12	11	10	9	8	7	6	5	4	3	2	1	0
Name									DRK							
Type									R/W							
Reset									0							

This register controls the parameter of brightness adjustment for the image. The parameter is in unsigned format. Setting the value to be greater than 0 degrades the intensity of the image pixel. In terms of transfer curve, it represents the offset in the x-axis. The valid value ranges from 0 to 255.

DRK Brightness adjustment coefficient

IMG+0128h Contrast adjustment coefficient

IMGPROC_CONADJ

Bit	15	14	13	12	11	10	9	8	7	6	5	4	3	2	1	0
Name									CON							
Type									R/W							
Reset									20h							

This register defines the parameter of contrast adjustment for the image pixel. The parameter is in unsigned format with normalization factor 20h. Setting the value to be greater than 20h enhances the contrast for the image; and setting the value to be less than 20h lowers the contrast for the image. The valid value ranges from 0 to 255.

CON Contrast adjustment coefficient

IMG+0130h Colorize u component coefficient

IMGPROC_COLORIZEU

Bit	15	14	13	12	11	10	9	8	7	6	5	4	3	2	1	0
Name									UCOM							
Type									R/W							
Reset									0							

IMG+0134h Colorize v component coefficient

IMGPROC_COLORIZEV

Bit	15	14	13	12	11	10	9	8	7	6	5	4	3	2	1	0
Name									VCOM							
Type									R/W							
Reset									0							

These registers controls the parameters of colorize effect for the image. The valid value ranges from –128 to 127 in 2's complement format. If the values of both coefficients are zero, it implies the gray-scale effect.

UCOM Colorize effect u component coefficient.

VCOM Colorize effect v component coefficient.

IMG+0140h Mask coefficient C11

IMGPROC_MASK11

Bit	15	14	13	12	11	10	9	8	7	6	5	4	3	2	1	0

MTK Confidential Release for Konka

Name												C11
Type												R/W
Reset												0

IMG+0144h Mask coefficient C12

IMGPROC_MASK12

Bit	15	14	13	12	11	10	9	8	7	6	5	4	3	2	1	0
Name														C12		
Type														R/W		
Reset														0		

IMG+0148h Mask coefficient C13

IMGPROC_MASK13

Bit	15	14	13	12	11	10	9	8	7	6	5	4	3	2	1	0
Name														C13		
Type														R/W		
Reset														0		

IMG+014Ch Mask coefficient C21

IMGPROC_MASK21

Bit	15	14	13	12	11	10	9	8	7	6	5	4	3	2	1	0
Name														C21		
Type														R/W		
Reset														0		

IMG+0150h Mask coefficient C22

IMGPROC_MASK22

Bit	15	14	13	12	11	10	9	8	7	6	5	4	3	2	1	0
Name														C22		
Type														R/W		
Reset														0		

IMG+0154h Mask coefficient C23

IMGPROC_MASK23

Bit	15	14	13	12	11	10	9	8	7	6	5	4	3	2	1	0
Name														C23		
Type														R/W		
Reset														0		

IMG+0158h Mask coefficient C31

IMGPROC_MASK31

Bit	15	14	13	12	11	10	9	8	7	6	5	4	3	2	1	0
Name														C31		
Type														R/W		
Reset														0		

IMG+015Ch Mask coefficient C32

IMGPROC_MASK32

Bit	15	14	13	12	11	10	9	8	7	6	5	4	3	2	1	0
Name														C32		

MTK Confidential Release for Konka

Type												R/W
Reset												0

IMG+0160h Mask coefficient C33

IMGPROC_MASK33

Bit	15	14	13	12	11	10	9	8	7	6	5	4	3	2	1	0
Name														C33		
Type														R/W		
Reset														0		

These registers define the 9 mask coefficients for linear filtering. The coefficients are in 2's complement format with range from –16 to 15. The index associated with these coefficients represents the row index followed by the column index. The Image Engine performs the same arithmetic convolution on 3 components of the target image.

$$\begin{bmatrix} C11 & C12 & C13 \\ C21 & C22 & C23 \\ C31 & C32 & C33 \end{bmatrix}$$

C11 Mask coefficient C11.
C12 Mask coefficient C12.
C13 Mask coefficient C13.
C21 Mask coefficient C21.
C22 Mask coefficient C22.
C23 Mask coefficient C23.
C31 Mask coefficient C31.
C32 Mask coefficient C32.
C33 Mask coefficient C33

IMG+0164h Mask data down-scaling coefficient

IMGPROC_SCALE

Bit	15	14	13	12	11	10	9	8	7	6	5	4	3	2	1	0
Name														SCA		
Type														R/W		
Reset														0		

This register stores the value that could divide the mask data after convolution. It's used for normalization, and only for linear HP mode.

SCA The value used to scale down the mask data.

IMG+0170h Gamma correction offset value for segment 0

IMGPROC_GAMMA_OFF0

Bit	15	14	13	12	11	10	9	8	7	6	5	4	3	2	1	0
Name														OFF0		
Type														R/W		
Reset														0		

This register stores the y-offset value of the segment 0 for gamma correction.

OFF0 Offset value.

For offset values of other segments, please refer to **Table 55**.

MTK Confidential Release for Konka

IMG+0190h Gamma correction slope value for segment 0

IMGPROC_GAMMA_SLP0

Bit	15	14	13	12	11	10	9	8	7	6	5	4	3	2	1	0
Name									SLP0							
Type									R/W							
Reset									0							

This register stores the slope value of the segment 0 for gamma correction.

SLP0 Slope value.

For slope values of other segments, please refer to **Table 55**.

IMG+01B0h Gamma correction control register

IMGPROC_GAMMA_CON

Bit	15	14	13	12	11	10	9	8	7	6	5	4	3	2	1	0
Name																GTO
Type																R/W
Reset																0

This register is used to control the gamma correction mode.

GTO gamma value greater than one indicator

- **0** Gamma value is not greater than one.
- **1** Gamma value is greater than one.

Register Address	Register Function	Acronym
IMG+0170h	Offset value for the 1st segment	IMGPROC_GAMMA_OFF0
IMG+0174h	Offset value for the 2nd segment	IMGPROC_GAMMA_OFF1
IMG+0178h	Offset value for the 3rd segment	IMGPROC_GAMMA_OFF2
IMG+017Ch	Offset value for the 4th segment	IMGPROC_GAMMA_OFF3
IMG+0180h	Offset value for the 5th segment	IMGPROC_GAMMA_OFF4
IMG+0184h	Offset value for the 6th segment	IMGPROC_GAMMA_OFF5
IMG+0188h	Offset value for the 7th segment	IMGPROC_GAMMA_OFF6
IMG+018Ch	Offset value for the 8th segment	IMGPROC_GAMMA_OFF7
IMG+0190h	Slope value for the 1st segment	IMGPROC_GAMMA_SLP0
IMG+0194h	Slope value for the 2nd segment	IMGPROC_GAMMA_SLP1
IMG+0198h	Slope value for the 3rd segment	IMGPROC_GAMMA_SLP2
IMG+019Ch	Slope value for the 4th segment	IMGPROC_GAMMA_SLP3
IMG+01A0h	Slope value for the 5th segment	IMGPROC_GAMMA_SLP4
IMG+01A4h	Slope value for the 6th segment	IMGPROC_GAMMA_SLP5
IMG+01A8h	Slope value for the 7th segment	IMGPROC_GAMMA_SLP6
IMG+01ACh	Slope value for the 8th segment	IMGPROC_GAMMA_SLP7

Table 55 Gamma correction offset and slope register list

MTK Confidential Release for Konka

IMG+0200h Color adjustment offset x for 2nd segment, red

IMGPROC_COLOR1R_OFFX

Bit	15	14	13	12	11	10	9	8	7	6	5	4	3	2	1	0
Name																
Type																
Reset																

IMG+0220h Color adjustment offset y for 2nd segment, red

IMGPROC_COLOR1R_OFFY

Bit	15	14	13	12	11	10	9	8	7	6	5	4	3	2	1	0
Name																
Type																
Reset																

IMG+0240h Color adjustment slope for 2nd segment, red

IMGPROC_COLOR1R_SLP

Bit	15	14	13	12	11	10	9	8	7	6	5	4	3	2	1	0
Name											SLP					
Type											R/W					
Reset											0					

The above lists part of the registers that define the color adjustment parameters.

Color adjustment in Image Engine is used to tune the red, green, and blue color dimension individually to exhibit required color tone as a whole. We provide 3-segment piecewise linear transfer curve for the user to be configured. The x offset defines the separation point for input color value. The y offset defines the offset for each segment. The slope defines the contrast enhancement ratio for each segment.

For the red, green and blue components, the bit-width of the offset value is 8.

OFFX input value separation point.

OFFY output value offset.

SLP Slope. Contrast tuning ratio within the segment.

For all the registers of color adjustment, please refer to **Table 6** for detail information.

Register Address	Register Function	Bit-width	Acronym
IMG+0200h	Color adjustment offset x for 2nd segment, red	8	IMGPROC_COLOR1R_OFFX
IMG+0204h	Color adjustment offset x for 3rd segment, red	8	IMGPROC_COLOR2R_OFFX
IMG+0208h	Color adjustment offset x for 2nd segment, green	8	IMGPROC_COLOR1G_OFFX
IMG+020Ch	Color adjustment offset x for 3rd segment, green	8	IMGPROC_COLOR2G_OFFX
IMG+0210h	Color adjustment offset x for 2nd segment, blue	8	IMGPROC_COLOR1R_OFFX
IMG+0214h	Color adjustment offset x for 3rd segment, blue	8	IMGPROC_COLOR2R_OFFX
IMG+0220h	Color adjustment offset y for 2nd segment, red	8	IMGPROC_COLOR1R_OFFY
IMG+0224h	Color adjustment offset y for 3rd segment, red	8	IMGPROC_COLOR2R_OFFY
IMG+0228h	Color adjustment offset y for 2nd segment, green	8	IMGPROC_COLOR1G_OFFY
IMG+022Ch	Color adjustment offset y for 3rd segment, green	8	IMGPROC_COLOR2G_OFFY
IMG+0230h	Color adjustment offset y for 2nd segment, blue	8	IMGPROC_COLOR1R_OFFY
IMG+0234h	Color adjustment offset y for 3rd segment, blue	8	IMGPROC_COLOR2R_OFFY

MTK Confidential Release for Konka

IMG+0240h	Color adjustment slope for 1st segment, red	6	IMGPROC_COLOR0R_SLOPE
IMG+0244h	Color adjustment slope for 2nd segment, red	6	IMGPROC_COLOR1R_SLOPE
IMG+0248h	Color adjustment slope for 3rd segment, red	6	IMGPROC_COLOR1R_SLOPE
IMG+0250h	Color adjustment slope for 1st segment, green	6	IMGPROC_COLOR0G_SLOPE
IMG+0254h	Color adjustment slope for 2nd segment, green	6	IMGPROC_COLOR1G_SLOPE
IMG+0258h	Color adjustment slope for 3rd segment, green	6	IMGPROC_COLOR1G_SLOPE
IMG+0260h	Color adjustment slope for 1st segment, blue	6	IMGPROC_COLOR0B_SLOPE
IMG+0264h	Color adjustment slope for 2nd segment, blue	6	IMGPROC_COLOR1B_SLOPE
IMG+0268h	Color adjustment slope for 3rd segment, blue	6	IMGPROC_COLOR1B_SLOPE

Table 56 Color adjustment offset and slope register list

MTK Confidential Release for Konka

IMG+0304h Image frame width

IMGPROC_IMG WIDTH

Bit	15	14	13	12	11	10	9	8	7	6	5	4	3	2	1	0
Name					IM											
Type					R/W											
Reset					0											

This register is the image frame width register. The maximum allowable frame width is 4095. The Image Engine uses it to locate the address for every pixel in the image frame.

IM Image frame width

IMG+0308h Image frame height

IMGPROC_IMG HEIGHT

Bit	15	14	13	12	11	10	9	8	7	6	5	4	3	2	1	0
Name					IH											
Type					R/W											
Reset					0											

This register is the image frame height register. The maximum allowable frame height is 4095. The Image Engine uses it to locate the address for every pixel in the image frame.

IH Image frame width

IMG+030Ch Image frame source register

IMGPROC_ADDR_SRC

Bit	31	30	29	28	27	26	25	24	23	22	21	20	19	18	17	16
Name	SRC[31:16]															
Type	R/W															
Reset	0															
Bit	15	14	13	12	11	10	9	8	7	6	5	4	3	2	1	0
Name	SRC[15:0]															
Type	R/W															
Reset	0															

This register defines the starting address of the source image frame. The Image Engine takes this address as that of the top-left pixel in the source image frame, and assumes the image frame is stored continuously, such that, all other pixels in that image frame can be addressed by an offset, which is calculated by the engine.

SRC The source address

IMG+0310h Image frame destination register

IMGPROC_ADDR_DST

Bit	31	30	29	28	27	26	25	24	23	22	21	20	19	18	17	16
Name	DST[31:16]															
Type	R/W															
Reset	0															
Bit	15	14	13	12	11	10	9	8	7	6	5	4	3	2	1	0
Name	DST[15:0]															
Type	R/W															
Reset	0															

MTK Confidential Release for Korka

This register defines the starting address of the destination image frame. The Image Engine writes the processed image pixel by pixel from the top-left corner into the memory. The target image will be stored in the continuous address in the memory.

DST The destination address

IMG+0314h Dummy pixel

IMGPROC_DUMMYPXL

Bit	15	14	13	12	11	10	9	8	7	6	5	4	3	2	1	0
Name												DUMMY				
Type												R/W				
Reset												0				

This register defines the dummy pixel value, which is taken to pad beyond the image frame boundary when performing the ranking (maximum, median, and minimum) filter. The value is unsigned and is applied on all R/G/B color components simultaneously.

For linear filtering, the Image Engine only considers the pixels within the image boundary.

DUMMY The dummy pixel.

IMG+0318h R2Y source select

IMGPROC_R2Y_SRC

Bit	15	14	13	12	11	10	9	8	7	6	5	4	3	2	1	0
Name														PNG	GIF	IMGDMA
Type														R/W	R/W	R/W
Reset														0	0	0

This register defines the RGB source of IPP3 in ***IMGPROC mode***. (Only one source can be enabled)

ON 1

OFF 0

IMG+031Ch Thumbnail output enable

IMGPROC_TNL_EN

Bit	15	14	13	12	11	10	9	8	7	6	5	4	3	2	1	0
Name																TNL
Type																R/W
Reset																0

This register defines if enable the thumbnail data path

ON 1

OFF 0

IMG+0320h Image machine enable

IMGPROC_EN

Bit	15	14	13	12	11	10	9	8	7	6	5	4	3	2	1	0
Name														RSTB		EN
Type														R/W		R/W
Reset														1		0

This register defines the enable and software reset signal of the image processor. Before performing image effect adjustment, the reset is necessary.

EN 0: Machine disable, pixel-base and filtering path are both disable.

MTK Confidential Release for Konka

1: Machine enable

RSTB 0: low-level Reset, all configurations will be initialized.

1 : Not Reset.

6.16.2 Image Engine in MT6228

The Image Engine (IPP) plays the important role in MT6228 multimedia data path. It performs the necessary color space conversion for next-stage needs. The path from Post-RESZ to IPP1 can also been applied the image effect. Fig.1 shows its input/output data format and the relation with other multimedia module.

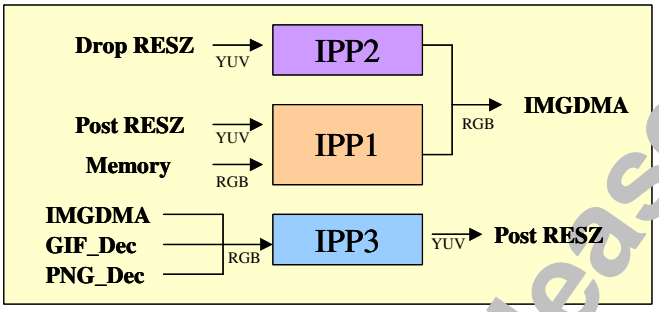

Fig. 1. Image Engine in MT6228.

The Graph mode setting depends on what kinds of data paths and image engines that we used. The Details are all listed in Table 4.

Graph mode	Used Engine	Function	Note
Preview	IPP1	IPP1: Y2R, YUV/RGB image effect	
Capture	IPP1, IPP2	IPP1 : Y2R, YUV/RGB image effect IPP2: Y2R	Thumbnail enable must be set if using IPP2
MPEG	IPP1	IPP1: Y2R, YUV/RGB image effect	
IMGPROC	IPP1, IPP3	IPP1: Y2R, YUV/RGB image effect IPP3: R2Y	R2Y source (image_dma, gif, png decorder) must be selected for IPP3
IMAGE Encode	IPP2, IPP3	IPP2: Y2R IPP3: R2Y	Thumbnail enable must be set if using IPP2

Table 57. Graph mode of Image Engine.

6.16.3 Image effect application

The Image Engine is the hardware coprocessor that performs image effects on video stream or stand-alone image. It provides the following effects:

1. Hue adjustment.
2. Saturation adjustment.
3. Contrast and intensity adjustment.
4. Grayscale and colorization.

MTK Confidential Release for Konka

5. Gamma correction.
6. Color adjustment.
7. Linear filtering.
8. Nonlinear filtering.

The format of the coefficients is listed in **Table 58**.

Function	Parameter group	Range (normalized factor)	Format
Hue	C11, C12, C21, C22	-64 ~ 64 (64)	2's complement
Saturation	SAT	0~127 (32)	Unsigned
Contrast and brightness	BRI1	0~255	Unsigned
	BRI2	0~255	Unsigned
	Contrast	0~255 (32)	Unsigned
Colorize	U, V	-128~127	2's complement
Gamma correction	Offset	0~63	Unsigned
	Slope	0~255 (16)	Unsigned
Color adjustment	Offset for red	0~31	Unsigned
	Slope for red	0~63 (16)	Unsigned
	Offset for green	0~63	Unsigned
	Slope for green	0~63 (16)	Unsigned
	Offset for blue	0~31	Unsigned
	Slope for blue	0~63 (16)	Unsigned
Mask	C11, C12, C13, C21, C22, C23, C31, C32, C33	-16~15	2's complement
	Dummy pixel	0~63	Unsigned

Table 58 Coefficients format table

6.16.3.1 Gamma correction and color adjustment

Gamma correction is a nonlinear technique. We use linear-approximation scheme for it and the same curve is applied equally on red, green, and blue components.

Two approaches are provided. For the first one, the overall input value is equally divided into 8 segments. It's suitable for the case when gamma is greater than 1. For the second one, the value is divided into 6 unsymmetrical segments. It's suitable for the case when gamma is smaller then 1.

Color adjustment is used to adjust different colors with different curves. For each color, a 3 segment piece-wise linear curve is applied. The user has to decide the offsets and the slopes of these 3 segments. The coefficients should be positive.

Cool tone and warm tone filters are both popular applications for color adjustment.

MTK Confidential Release for Konka

6.16.3.2 Filtering coefficients for linear filter

The filtering operation in Image Engine basically imposes artifacts on the original image and aims to produce a variety of effects.

For low pass filter, the matrix can be defined as

$$H = \left[\frac{1}{b+2}\right]^2 \cdot \begin{bmatrix} 1 & b & 1 \\ b & b^2 & b \\ 1 & b & 1 \end{bmatrix}, \textit{where b is a positve number}$$

$H_1 = \left[\frac{1}{9}\right] \cdot \begin{bmatrix} 1 & 1 & 1 \\ 1 & 1 & 1 \\ 1 & 1 & 1 \end{bmatrix}$, $H_2 = \left[\frac{1}{10}\right] \cdot \begin{bmatrix} 1 & 1 & 1 \\ 1 & 2 & 1 \\ 1 & 1 & 1 \end{bmatrix}$, and $H_3 = \left[\frac{1}{16}\right] \cdot \begin{bmatrix} 1 & 2 & 1 \\ 2 & 4 & 2 \\ 1 & 2 & 1 \end{bmatrix}$ are all popular examples that could present blur or softening effects. The concept can be extended to larger size matrix. For H_1-like matrix, we provided 5x5 and 7x7 option, which we named *blur* and *more blur* effects. The matrices are as follows:

$$H_{5x5} = \left[\frac{1}{25}\right] \cdot \begin{bmatrix} 1 & 1 & 1 & 1 & 1 \\ 1 & 1 & 1 & 1 & 1 \\ 1 & 1 & 1 & 1 & 1 \\ 1 & 1 & 1 & 1 & 1 \\ 1 & 1 & 1 & 1 & 1 \end{bmatrix}$$

$$H_{7x7} = \left[\frac{1}{49}\right] \cdot \begin{bmatrix} 1 & 1 & 1 & 1 & 1 & 1 & 1 \\ 1 & 1 & 1 & 1 & 1 & 1 & 1 \\ 1 & 1 & 1 & 1 & 1 & 1 & 1 \\ 1 & 1 & 1 & 1 & 1 & 1 & 1 \\ 1 & 1 & 1 & 1 & 1 & 1 & 1 \\ 1 & 1 & 1 & 1 & 1 & 1 & 1 \\ 1 & 1 & 1 & 1 & 1 & 1 & 1 \end{bmatrix}$$

For high-pass filter, we illustrate some commonly used matrices.

$$H_1 = \begin{bmatrix} 0 & -1 & 0 \\ -1 & 5 & -1 \\ 0 & -1 & 0 \end{bmatrix}, H_2 = \begin{bmatrix} -1 & -1 & -1 \\ -1 & 9 & -1 \\ -1 & -1 & -1 \end{bmatrix}, H_3 = \begin{bmatrix} 1 & -2 & 1 \\ -2 & 5 & -2 \\ 1 & -2 & 1 \end{bmatrix}$$

These filters present edge enhancement effects. They all have the property that the sum of their elements is unity in order to avoid amplitude bias in the processed image. In Image Engine, the user can choose *HP filtering* option for them.

MTK Confidential Release for Konka

For matrix like $H = \frac{1}{3} \cdot \begin{bmatrix} 0 & -1 & 0 \\ -1 & 7 & -1 \\ 0 & -1 & 0 \end{bmatrix}$, a division-by-3 is required since the sum of its elements is not unity. For this case, the user should program the register IMGPROC_SCALE and choose *HP filtering with scale down* option.

For matrix like $H = \begin{bmatrix} -1 & -1 & -1 \\ -1 & 8 & -1 \\ -1 & -1 & -1 \end{bmatrix}$, the sum of its elements is 0 and no division is required. The user can choose *HP filtering* option for it.

6.16.3.3 Nonlinear filter

Median filter is a nonlinear technique that is useful for noise suppression in images. It consists of a 3-by-3 sliding window. The center pixel in the window is replaced by the median of the pixels in the window.

The idea is further extended to maximum filter and minimum filter. The maximum filter presents dilation effects. It puts more emphasis on the brighter point in the image. On the contrary, the minimum filter presents erosion effects.

6.16.4 Image process control

For filtering application, the software can initialize, start, and stop the operation of the Image Engine. Setting START bit in the register IMGPROC_CON starts the operation, and setting STOP bit stops the operation. Notice that the user should not restart the next process before the Image Engine returns from BUSY state. The user can check the status by monitoring BUSY bit in the register IMGPROC_STS.

6.17 MPEG-4/H.263 Video CODEC

6.17.1 General Description

MPEG-4 is an emerging video coding standard defined in ISO/IEC 14496-2. It is designed to cover a wide range of bit-rates (typically, 5 kbps to 10Mbps). MPEG-4 standard has become one of the enabling factors for mobile multimedia communications. H.263 is another video coding standard that is developed by ITU-T/SG 15 for low-bit-rate applications below 64kbps. H.263 profile 0 level 10 is the mandatory video decoder in 3GPP specification. Therefore, our goal is to design a video codec suited to both MPEG-4 and H.263 standard.

There are two coding modes in MPEG-4 video compression: Intra-frame coding and Inter-frame coding. Intra-frame coding refers to video coding techniques that achieve compression by exploiting the high spatial correlation between neighboring pels within a video frame. Such techniques are also known as spatial redundancy reduction techniques or still-image coding techniques. Inter-frame coding refers to video coding techniques that achieve compression by exploiting the high temporal correlation between the frames of a video sequence. Such methods are also known as temporal redundancy reduction techniques. Note that inter-frame coding may not be appropriate for some applications. For example, it would be necessary to decode the complete inter-frame coded sequence before being able to randomly access individual frames. Thus, a combined approach is normally used in which a number of frames are intra-frame coded (I-frames) at specific intervals within the sequence and the other frames are inter-frame coded (Predicted or P-frames) with reference to those key frames. Moreover, intra-frame coding is allowed in P-frames.

MTK Confidential Release for Konka

The ISO/IEC 14496 specification is intended to be generic in the sense that it serves a wide range of applications, bit-rates, resolutions, qualities and services. A number of coding tools are defined in the specification. Considering the practicality of implementing the full syntax of this specification, a limited number of subsets of the syntax are also stipulated by means of "profile" and "level". A "profile" is a defined subset of the entire bitstream syntax that is defined by this specification. A "level" is a defined set of constraints imposed on parameters in the bitstream. Our application is focused on handset devices. Due to restriction of limited resource, only simple profile is supported for most of handset devices. According to 3GPP TS 26.234 specification, H.263 profile 0 level 10 is the mandatory video decoder. MPEG-4 visual simple profile level 0 is an optional video decoder. The MPEG-4/H.263 codec supports both MPEG-4 simple profile and H.263 baseline profile. Generally, the file extension of MPEG-4 video file is .mp4. The file extension of 3GPP video file is .3gp.

The design implements both decoder and encoder. The decoder block diagram is shown in Figure 34. The encoder block diagram is shown in Figure 35

The decode specification is as follows:

1. Support ISO/IEC 14496-2 MPEG-4 simple profile @ level 0~3
2. Support H.263 profile 0 level 10 (baseline profile)
3. The following visual tools are supported
   - I-VOP
   - P-VOP
   - AC/DC Prediction
   - 4-MV
   - Unrestricted MV
   - Error Resilience
     - Slice Resynchronization
     - Data Partitioning
     - Reversible VLC
   - Short Header Mode
   - Full and Half Pel accuracy
   - *fcode* can be 1~7
   - Maximum horizontal luminance pixel resolution can be up to 352
   - Maximum vertical luminance pixel resolution can be up to 288
   - Error Concealment
   - Single object
4. Deblocking filter

MTK Confidential Release for Konka

Source images are coded in blocks of pixels. Since correlation among spatially adjacent blocks is not taken into account during coding, this results in block boundaries being visible when the decoded image is reconstructed. The purpose of deblocking filter is to reduce blocking artifacts while keeping image edge intact. Blocking effect can be reduced efficiently and image will be smooth after applying deblocking filter. A high quality deblocking filter is embedded in the MPEG-4 Decoder. It performs both horizontal and vertical deblocking filtering simultaneously while decoding. Memory access bandwidth is minimized in the design. Luminance as well as chrominance data is filtered.

The encoder specification is as follows:

5. Support ISO/IEC 14496-2 MPEG-4 simple profile @ level 0, partially support MPEG-4 simple profile @ level 1
6. Support H.263 profile 0 level 10
7. The following visual tools are supported
   - I-VOP
   - P-VOP
   - DC Prediction
   - Unrestricted MV
   - Short Header Mode
   - Full and Half Pel motion estimation
   - Decision making logic
   - *fcode* can be 1~3
   - *intra_dc_vlc_threshold* shall be 0
   - Maximum horizontal luminance pixel resolution can be up to 352
   - Maximum vertical luminance pixel resolution can be up to 288

MTK Confidential Release for Konka

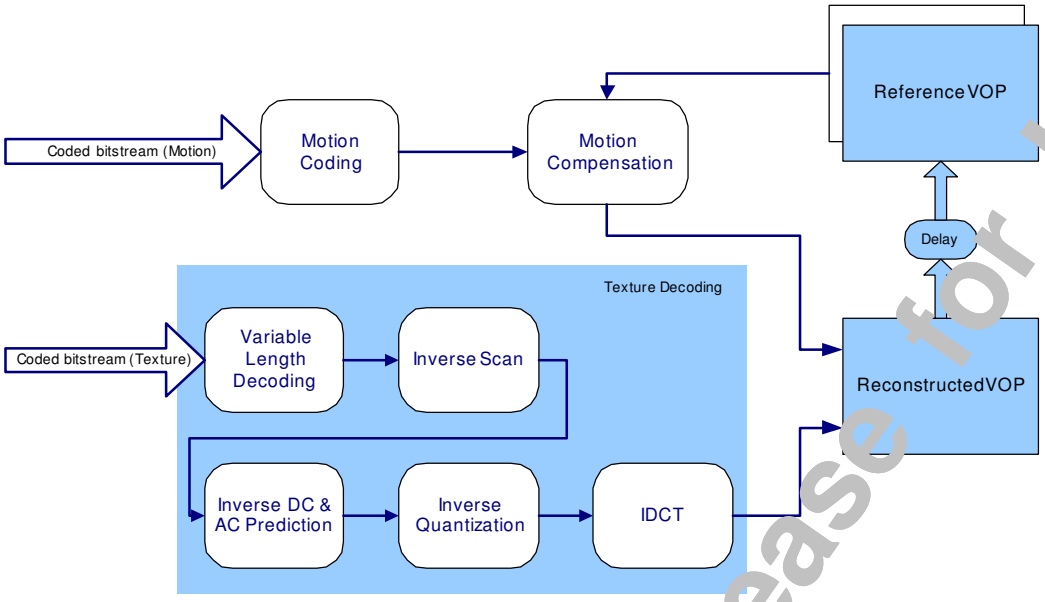

Figure 34 Block Diagram of Decoder

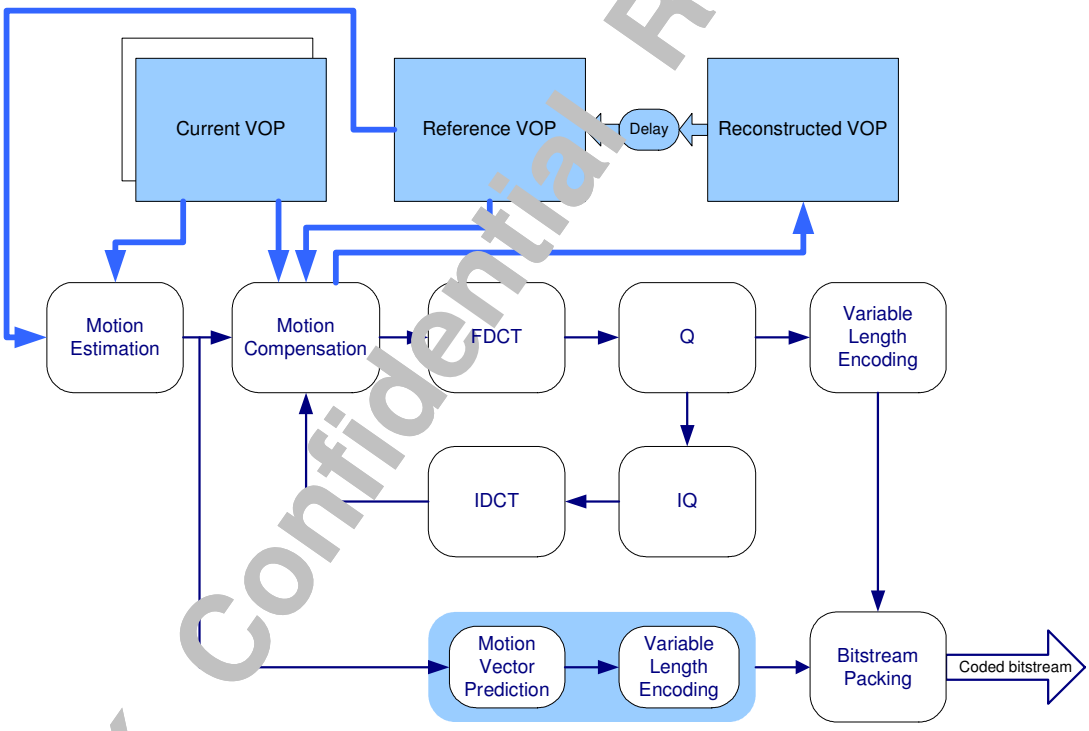

Figure 35 Block Diagram of Encoder

MTK Confidential Release for Konka

6.17.2 Register Definitions

6.17.2.1 Main Control

MP4+0000h Video CODEC Command Register

MP4_CODEC_COMD

Bit	31	30	29	28	27	26	25	24	23	22	21	20	19	18	17	16
Name	-	-	-	-	-	-	-	-	-	-	-	-	-	-	-	-
Type																
Bit	15	14	13	12	11	10	9	8	7	6	5	4	3	2	1	0
Name	-	-	-	-	-	-	-	-	-	-	-	DEC_START	ENC_START	DEC_RST	ENC_RST	CORE_RST
Type												WO	WO	WO	WO	WO

This register is the main command register for video CODEC.

CORE_RST Software reset control. Writing 1 to this bit will reset the hardware core excluding APB control register set of decoder and encoder.

ENC_RST Software reset control. Writing 1 to this bit will reset the APB control register set of encoder. Note that this bit won't reset the hardware core.

DEC_RST Software reset control. Writing 1 to this bit will reset the APB control register set of decoder. Note that this bit won't reset the hardware core.

ENC_START Start the encode operation if writing 1 to this bit. The encode operation will start only when no decode operation is running; otherwise the encode operation will queue until decode operation is done.

DEC_START Start the decode operation if writing 1 to this bit. The decode operation will start only when no encode operation is running; otherwise the decode operation will queue until encode operation is done.

MP4+0004h VLC DMA Command Register

MP4_VLC_DMA_COMD

Bit	31	30	29	28	27	26	25	24	23	22	21	20	19	18	17	16
Name	-	-	-	-	-	-	-	-	-	-	-	-	-	-	-	-
Type																
Bit	15	14	13	12	11	10	9	8	7	6	5	4	3	2	1	0
Name	-	-	-	-	-	-	-	-	-	-	-	-	-	-	RESUME	STOP
Type															WO	WO

This register is the main control of VLC DMA.

STOP Stop the VLC DMA. Stop VLC DMA activities through SW rather than HW state machine.

RESUME Resume the VLC DMA access. VLC DMA state machine will go to a pending state if the maximum allowed write count to target memory is reached and then an interrupt has occured. After re-allocating the target address, SW writes RESUME to unfreeze the encoding process.

MTK Confidential Release for Konka

6.17.2.2 Encoder

6.17.2.2.1 Control

MP4+0100h Encoder Configuration Register **MP4_ENC_CODEC_CONF**

Bit	31	30	29	28	27	26	25	24	23	22	21	20	19	18	17	16
Name	-	-	-	-	-	-	-	-	-	-	-	-	-	-	-	CHECK_TV
Type																
Reset	0	0	0	0	0	0	0	0	0	0	0	0	0	0	0	0
Bit	15	14	13	12	11	10	9	8	7	6	5	4	3	2	1	0
Name	-	-	-	MC_BURST_EN	PMV	DQUAN	FME	HALF	STEP_LIMIT				VPGOB	DCT	IRQ	ENC
Type			R/W	R/W	R/W	R/W	R/W	R/W	R/W	R/W	R/W	R/W	R/W	R/W	R/W	R/W
Reset	0	0	0	0	0	0	0	0	0	0	0	0	0	0	0	0

This register is used to configure the operating conditions and modes of video CODEC.

ENC Video CODEC Operation Mode
- **0** Decode Mode
- **1** Encode Mode

IRQ Control for interrupt request
- **0** Disable the interrupt reporting mechanism
- **1** Enable the interrupt reporting mechanism

DCT DCT Control
- **0** Enable JPEG CODEC Operation
- **1** Enable MPEG-4 Video CODEC Operation

VPGOB Control for decoding Video Packet Header; keep this for legacy reason.
- **0** Disable: decoding in Video Packet Level. It means the software will take the responsibility for decoding packet header of each video packet.
- **1** Enable: decoding in Video Object Plane Level

STEP_LIMIT Step limit for Motion Estimation. The total number of steps in a n-step search is STEP_LIMIT+2. Increasing STEP_LIMIT can increase search range of motion vectors.

HALF Motion Estimation uses half-pel resolution
- **0** Disable. Perform full pel motion estimation only
- **1** Enable. Perform full pel motion estimation first, then half pel motion estimation

FME Fast Motion Enhancement
- **0** Enable Four Step Search motion estimation algorithm
- **1** Enable Mediatek proprietary motion estimation algorithm. This algorithm can improve visual quality in fast motion pictures while maintaining the same quality as Four Step Search in slow motion pictures. Enabling this algorithm does not increase search time. Thus, set FME to 1 is recommended.

DQUAN Control for automatic update quantizer_scale process; keep this for legacy reason.
- **0** Disable
- **1** Enable

PMV Predictive Motion Vector Search. This is a two pass search algorithm. This algorithm can co-operate with both four step search (FME=0) and Mediatek proprietary search (FME=1). The idea is to initially consider several highly

MTK Confidential Release for Konka

likely predictors (starting points), perform motion estimation from these predictors, and choose the best result among these predictors. In our approach, the two predictors approach is adopted. The origin (0,0) is considered as the predictor of first pass. The minimum BDM point found in first pass will be the predictor of the second pass. After finishing two-pass motion estimation, choose the best result between the two minimum BDM points. This algorithm can significantly improve PSNR by about 0.8dB. However, the search time will increase by about 60%. Setting PMV to 1 or 0 is the trade-off between visual quality and search time.

0 Disable

1 Enable**MC_BURST_EN** 2-beat Burst mode enable signal in MC.

0 Diable

1 Enable

CHECK_TV Enable signal to check if TV codec is busy before starting encoding operation.

0 Do not check TV codec

1 Check TV codec

MP4+0104h Encoder Status Register MP4_ENC_STS

Bit	31	30	29	28	27	26	25	24	23	22	21	20	19	18	17	16
Name	STATE															
Type	RO	RO	RO	RO	RO	RO	RO	RO	RO	RO	RO	RO	RO	RO	RO	RO
Bit	15	14	13	12	11	10	9	8	7	6	5	4	3	2	1	0
Name	STATE															
Type	RO	RO	RO	RO	RO	RO	RO	RO	RO	RO	RO	RO	RO	RO	RO	RO

This register provides the state information of encoding sequencer for software program. It is a mirror of the HW one-hot sequencer state machine and can be used for debugging or IRQ status judging.

MP4+0108h Encoder Interrupt Mask Register MP4_ENC_IRQ_MASK

Bit	31	30	29	28	27	26	25	24	23	22	21	20	19	18	17	16
Name	-	-	-	-	-	-	-	-	-	-	-	-	-	-	-	-
Type																
Reset																
Bit	15	14	13	12	11	10	9	8	7	6	5	4	3	2	1	0
Name	-	-	-	-	-	-	-	-	-	-	-	-	DMA	PACK	BLOCK_DONE	ENC_DONE
Type													R/W	R/W	R/W	R/W
Reset													1	1	1	1

This register contains mask bit for each interrupt source in MPEG-4 Video encoder. It allows each interrupt source to be disabled or masked out separately under software control. After System Reset or software reset, all bit values will be set to '0' to indicate that interrupt requests are enabled.

DMA Mask of VLE DMA Limit interrupt.

PACK Mask of video packet bit count expire interrupt.

BLOCK_DONE Mask of block procedure complete interrupt.

ENC_DONE Mask of encode complete interrupt.

MTK Confidential Release for Konka

MP4+010Ch Encoder Interrupt Status Register

MP4_ENC_IRQ_STS

Bit	31	30	29	28	27	26	25	24	23	22	21	20	19	18	17	16
Name	-	-	-	-	-	-	-	-	-	-	-	-	-	-	-	-
Type																
Bit	15	14	13	12	11	10	9	8	7	6	5	4	3	2	1	0
Name	-	-	-	-	-	-	-	-	-	-	-	-	DMA	PACK	BLOCK_DONE	ENC_DONE
Type													RO	RO	RO	RO

This register allows software program to poll which interrupt source generates the interrupt request. A bit set to '1' indicates a corresponding active interrupt source. Note that IRQ control bit in MP4_ENC_CODEC_CONF should be enabled first in order to activate the interrupt reporting mechanism.

DMA Mask of VLC DMA interrupt. When decoder detects empty VLD stream buffer, an interrupt will inform the driver SW to refill the VLD stream buffer.

PACK Video Packet Bit Count Exceed interrupt. If a video packet size is larger than defined the interrupt will happen.

BLOCK_DONE Block decode or encode complete. A normal complete flag if the SW needs a block-based HW decoding or encoding.

ENC_DONE Encode complete. A normal condition when encoding procedure is done.

MP4+0110h Encoder Interrupt Acknowledge Register

MP4_ENC_IRQ_ACK

Bit	31	30	29	28	27	26	25	24	23	22	21	20	19	18	17	16
Name	-	-	-	-	-	-	-	-	-	-	-	-	-	-	-	-
Type																
Bit	15	14	13	12	11	10	9	8	7	6	5	4	3	2	1	0
Name	-	-	-	-	-	-	-	-	-	-	-	-	DMA	PACK	BLOCK_DONE	ENC_DONE
Type													WC	WC	WC	WC

This register provides a mean for software program to acknowledge the interrupt source. Writing a '1' to the specific bit position will result in an acknowledgement to the corresponding interrupt source and clear the corresponding bit in MP4_ENC_IRQ_STS.

ENC_DONE Encode Task Complete

BLOCK_DONE Block Task Complete

PACK Video Packet Bit Count Expired

DMA VLC DMA Buffer Limit Reached

MP4+0114h Encoder Configuration Register

MP4_ENC_CONF

Bit	31	30	29	28	27	26	25	24	23	22	21	20	19	18	17	16
Name	-	-	-	-	-	PACKCNT										PACK
Type						R/W	R/W	R/W	R/W	R/W	R/W	R/W	R/W	R/W	R/W	R/W
Reset						0	0	0	0	0	0	0	0	0	0	0

MTK Confidential Release for Konka

Bit	15	14	13	12	11	10	9	8	7	6	5	4	3	2	1	0
Name	-	-	INTRA						-	-	SKIP					
Type	R/W	R/W	R/W	R/W	R/W	R/W	R/W	R/W			R/W	R/W	R/W	R/W	R/W	R/W
Reset	0	0	0	0	0	0	0	0			0	0	0	0	0	0

This register is used specially to configure the desired encode conditions and modes for video CODEC.

SKIP Threshold for deciding not_coded bit. The value of SKIP is programmed by software first. The first round of pattern code (*me_pattern_code* is set to 6'h0 whenever ($SAD_y + SDA_u + SAD_v$) <= skip_threshold*16 *not_coded* bit will be set if *pattern_code* = 6'h0 and motion vector = (0,0)

INTRA Threshold for deciding INTRA Coding in P frame. The value of INTRA is programmed by software first. The 3-bits macro-block type (*mb_type*) is set to 3'h0 (Inter MB) if SADy < *intra_threshold*1024. Otherwise, *mb_type* is set to 3'h3 (Intra_MB)

PACK Use Video Packet Mode

- **0** Disable
- **1** Enable

PACKCNT Desired Bit Counts for a Video Packet. Used in encode mode to define the largest VLE buffer size of a video packet

6.17.2.2.2 Base Addresses

MP4+0124h Encoder Current VOP Base Address Register — MP4_ENC_VOP_ADDR

Bit	31	30	29	28	27	26	25	24	23	22	21	20	19	18	17	16
Name	VOP															
Type	RO	RO	RO	RO	RO	RO	RO	RO	RO	RO	RO	RO	RO	RO	R/W	R/W
Bit	15	14	13	12	11	10	9	8	7	6	5	4	3	2	1	0
Name	VOP														-	-
Type	R/W	R/W	R/W	R/W	R/W	R/W	R/W	R/W	R/W	R/W	R/W	R/W	R/W	R/W		

This register describes the starting address of Current VOP Frame that is going to be encoded. Note that this base address should be 4-byte aligned. And the required frame buffer size should be: numbers of pixel per frame * 1.5 bytes (YUV420 format).

VOP Current VOP Base Address.

MP4+0128h Encoder Reference VOP Base Address Register — MP4_ENC_REF_ADDR

Bit	31	30	29	28	27	26	25	24	23	22	21	20	19	18	17	16
Name	REF															
Type	RO	RO	RO	RO	RO	RO	RO	RO	RO	RO	RO	RO	RO	RO	R/W	R/W
Bit	15	14	13	12	11	10	9	8	7	6	5	4	3	2	1	0
Name	REF														-	-
Type	R/W	R/W	R/W	R/W	R/W	R/W	R/W	R/W	R/W	R/W	R/W	R/W	R/W	R/W		

This register describes the starting address of Reference VOP Frame. Note that this base address should be 4-byte aligned. And the required frame buffer size should be: numbers of pixel per frame * 1.5 bytes (YUV420 format).

REF Reference VOP Base Address.

MTK Confidential Release for Konka

MP4+012Ch Encoder Reconstructed VOP Base Address Register MP4_ENC_REC_ADDR

Bit	31	30	29	28	27	26	25	24	23	22	21	20	19	18	17	16
Name	REC															
Type	RO	RO	RO	RO	RO	RO	RO	RO	RO	RO	RO	RO	RO	RO	R/W	R/W
Bit	15	14	13	12	11	10	9	8	7	6	5	4	3	2	1	0
Name	REC														-	-
Type	R/W	R/W	R/W	R/W	R/W	R/W	R/W	R/W	R/W	R/W	R/W	R/W	R/W	R/W		

This register describes the starting address of Reconstructed VOP Frame. Note that this base address should be 4-byte aligned. And the required frame buffer size should be: numbers of pixel per frame * 1.5 bytes (YUV420 format).

REC Reconstructed VOP Base Address. The high boundary address of Reconstructed VOP should not cross 1M address boundary because the implementation of address offset counter is 20 bits. i.e. please make sure (the lower 20bits Reconstructed base address + size of Reconstructed frame) < 2^{20}

MP4+0130h VLE Data Load-Store LSB Base Address Register MP4_ENC_DATA_STORE_ADDR

Bit	31	30	29	28	27	26	25	24	23	22	21	20	19	18	17	16
Name	STORE															
Type															R/W	R/W
Bit	15	14	13	12	11	10	9	8	7	6	5	4	3	2	1	0
Name	STORE														-	-
Type	R/W	R/W	R/W	R/W	R/W	R/W	R/W	R/W	R/W	R/W	R/W	R/W	R/W	R/W		

This register describes the LSB address of VLE Data Load-Store buffer in data-partitioned mode. Note that this base address should be 4-byte aligned. And the required buffer size for encoder and decoder should be: 3K bytes and number of macroblock per frame * 32 bytes, respectively.

STORE LSB address of VLE Data Load-Store buffer

MP4+0134h DC/AC Prediction Storage LSB Base Address Register MP4_ENC_DACP_ADDR

Bit	31	30	29	28	27	26	25	24	23	22	21	20	19	18	17	16
Name	DACP															
Type															R/W	R/W
Bit	15	14	13	12	11	10	9	8	7	6	5	4	3	2	1	0
Name	DACP														-	-
Type	R/W	R/W	R/W	R/W	R/W	R/W	R/W	R/W	R/W	R/W	R/W	R/W	R/W	R/W		

This register describes the LSB address of DC/AC Prediction Storage buffer. Note that this base address should be 4-byte aligned. And the required buffer size for encoder and decoder should be: 1K bytes and 4K bytes, respectively.

DACP LSB address of DC/AC Prediction Storage buffer

MP4+0138h Motion Vector Storage LSB Base Address Register MP4_ENC_MVP_ADDR

Bit	31	30	29	28	27	26	25	24	23	22	21	20	19	18	17	16
Name	MVP_ADDR															

MTK Confidential Release for Korka

Type															R/W	R/W
Bit	15	14	13	12	11	10	9	8	7	6	5	4	3	2	1	0
Name	MVP_ADDR														-	-
Type	R/W	R/W	R/W	R/W	R/W	R/W	R/W	R/W	R/W	R/W	R/W	R/W	R/W	R/W		

This register describes the LSB address of Motion Vector Storage buffer. Note that this base address should be 4-byte aligned. And the required buffer size for encoder should be mb_x_limit * 2 * 4 bytes, which equals to 320 Bytes for VGA size.

MVP_ADDR LSB address of Motion Vector Storage buffer

6.17.2.2.3 Data Structure

MP4+0140h Encoder VOP Structure 0 Register

MP4_ENC_VOP_STRUCT0

Bit	31	30	29	28	27	26	25	24	23	22	21	20	19	18	17	16
Name	-	-	-	-	-	-	-	-	-	-	-	-	-	-		ROUND
Type																R/W
Bit	15	14	13	12	11	10	9	8	7	6	5	4	3	2	1	0
Name	VLCTHR			QUANT					FCODE			SHORT	-	RVLC	DATA	TYPE
Type	R/W	R/W	R/W	R/W	R/W	R/W	R/W	R/W	R/W	R/W	R/W	R/W	R/W	R/W	R/W	R/W

This register is used to describe the header information of a certain Video Object Plane that is going to be processed by video CODEC.

TYPE vop_coding_type definition, for both decode and encode.
- **0** This is a P-VOP frame (inter frame)
- **1** This is an I-VOP frame (intra frame)

DATA data_partitioned, for decode only; keep this for legacy reason.
- **0** Data stream is in non-data-partitioned mode
- **1** Data stream is in data-partitioned mode

RVLC resversible_vlc, for decode only; keep this for legacy reason.
- **0** Data stream contains no reversible VLC information
- **1** Data stream uses reversible VLC tables.

SHORT short_video_header; for both decode and encode
- **0** Normal MPEG-4 format
- **1** H.263 Compatible format

FCODE fcode size setting for both decode and encode, ranges from 0 to 7.

QUANT vop_quant. For both decode and encode. Quantizer scale of the current frame. For variable Q in decode mode, QUANT is an initial setting of the current frame.

VLCTHR intra_dc_vlc_thr. For decode only. According to VLCTHR, the decoder has to switch from intra DC mode to inter DC mode when the quantizer_scale is larger than a pre-defined value. VLCTHR ranges from 0 to 7.

ROUND Rounding type of half-pel motion compensation. ROUND==1 means truncation toward zero (the pixel value is always larger than 0); ROUND==0 means rounding-off addition.

MTK Confidential Release for Konka

MP4+0144h Encoder VOP Structure 1 Register

MP4_ENC_VOP_STRUCT1

Bit	31	30	29	28	27	26	25	24	23	22	21	20	19	18	17	16
Name	-	-	-	HECBIT					-	-	-	-	MBLENGTH			
Type				R/W	R/W	R/W	R/W	R/W					R/W	R/W	R/W	R/W
Bit	15	14	13	12	11	10	9	8	7	6	5	4	3	2	1	0
Name	-	-	-	YLIMIT					-	-	-	XLIMIT				
Type	R/W	R/W	R/W	R/W	R/W	R/W	R/W	R/W	R/W	R/W	R/W	R/W	R/W	R/W	R/W	R/W

This register is used by software program to control the start position and count limit of macroblock for a certain Video Packet or Video Object Plane that is going to be processed by video CODEC.

XLIMIT Macroblock count in X direction of a frame.

YLIMIT Macroblock count in Y direction of a frame.

MBLENGTH Bit count of Macroblock Number in Video Packet Header. It is a value defined by the following formula: MBCNT = (XLIMIT+15)/16 * (YLIMIT+15)/16. For larger MBCNT, we have larger MBLENGTH. MBLENGTH is ranged from 1 to 14.

HECBIT Bit count of extension header code in Video Packet Header

MP4+0148h Encoder VOP Structure 2 Register

MP4_ENC_VOP_STRUCT2

Bit	31	30	29	28	27	26	25	24	23	22	21	20	19	18	17	16
Name	-	-	-	-	-	-	-	MBNO								
Type								R/W	R/W	R/W	R/W	R/W	R/W	R/W	R/W	R/W
Bit	15	14	13	12	11	10	9	8	7	6	5	4	3	2	1	0
Name	-	-	-	VP_YPOS					-	-	-	VP_XPOS				
Type				R/W	R/W	R/W	R/W	R/W				R/W	R/W	R/W	R/W	R/W

This register is used by software program to control the start position and count limit of macroblock for a certain Video Packet or Video Object Plane that is going to be processed by video CODEC.

VP_XPOS Starting position of the current Video Packet in X coordinate.

VP_YPOS Starting position of the current Video Packet in Y coordinate.

MBNO Macroblock count limit for a video packet or frame. For a CIF frame the value will be 396.

MP4+014Ch VOP Structure 3 Register

MP4_VOP_STRUCT3

Bit	31	30	29	28	27	26	25	24	23	22	21	20	19	18	17	16
Name	-	-	-	-	-	-	-	MBNO								
Type								RO	RO	RO	RO	RO	RO	RO	RO	RO
Bit	15	14	13	12	11	10	9	8	7	6	5	4	3	2	1	0
Name	-	-	-	YPOS					-	-	-	XPOS				
Type				RO	RO	RO	RO	RO				RO	RO	RO	RO	RO

This register provides the position and count information of a certain macroblock that is currently under process of video CODEC.

XPOS Current Macroblock Position in X coordinate

YPOS Current Macroblock Position in Y coordinate

MBNO Current Macroblock Count

MTK Confidential Release for Korka

MP4+0150h MB Structure 0 Register

MP4_ENC_MB_STRUCT0

Bit	31	30	29	28	27	26	25	24	23	22	21	20	19	18	17	16
Name	-	-	-	-	-	-	-	-	-	-	-	-	-	QUANTIZER		
Type														R/W	R/W	R/W
Bit	15	14	13	12	11	10	9	8	7	6	5	4	3	2	1	0
Name	QUANTIZER		DCVLC	AC	DQUANT		PATTERN						TYPE			CODED
Type	R/W	R/W	R/W	R/W	R/W	R/W	R/W	R/W	R/W	R/W	R/W	R/W	R/W	R/W	R/W	R/W

This register is used to store the header information of current macroblock. This register is mostly used for debugging. Also used to provide hardware certain header information if all header parsing is done by software instead of hardware.

CODED not_coded flag of current macroblock; not_coded can be decoded by hardware from macroblock header.

TYPE mb_coding_type of current macroblock; mb_coding_type can be decoded by hardware from mcbpc in macroblck header.

PATTERN pattern_code of current macroblock; pattern_code can be decoded by hardware from cbpc and cbpy in macroblock header.

DQUANT dquant. It can be –2, -1, +1 or +2; total 4 possible choices using 2 bits to represent; dquant can be decoded by hardware from macroblock header.

AC ac_pred_flag. It decides whether AC prediction is needed; always 0 in encoder; ac_pred_flag can be decoded by hardware from macroblock header.

DCVLC use_intra_dc_vlc. If this bit is 0, intra AC VLC decode is used (no intra DC exists in current macroblock).

QUANTIZER quantizer_scale, ranged from 1 to 31. It can be variable if we have dquant values.

6.17.2.2.4 VLC DMA

MP4+0160h Encoder VLC DMA Base Address Register

MP4_ENC_VLC_BASE_ADDR

Bit	31	30	29	28	27	26	25	24	23	22	21	20	19	18	17	16
Name	BASE															
Type	R/W	R/W	R/W	R/W	R/W	R/W	R/W	R/W	R/W	R/W	R/W	R/W	R/W	R/W	R/W	R/W
Bit	15	14	13	12	11	10	9	8	7	6	5	4	3	2	1	0
Name	BASE														-	-
Type	R/W	R/W	R/W	R/W	R/W	R/W	R/W	R/W	R/W	R/W	R/W	R/W	R/W	R/W		

This register is used to describe the address of started Code Word for each VLC DMA buffer. Note that this base address should be 4-byte aligned.

BASE VLC DMA Base Address

MP4+0164h Encoder VLC DMA Base Bit Count Register

MP4_ENC_VLC_BASE_BITCNT

Bit	31	30	29	28	27	26	25	24	23	22	21	20	19	18	17	16
Name	-	-	-	-	-	-	-	-	-	-	-	-	-	-	-	-
Type																
Bit	15	14	13	12	11	10	9	8	7	6	5	4	3	2	1	0

MTK Confidential Release for Konka

Name	-	-	-	-	-	-	-	-	-	-	-	BIT				
Type												R/W	R/W	R/W	R/W	R/W

This register is used to describe the starting bit position of the 1st Code Word in the 1st VLC DMA buffer. For the following VLC DMA buffers, it is assumed that they are all 4-byte aligned and always start from bit position "0".

BIT Start of Bit at the 1st Code Word of 1st DMA Buffer

MP4+0168h Encoder VLC DMA Buffer Limit Register

MP4_ENC_VLC_LIMIT

Bit	31	30	29	28	27	26	25	24	23	22	21	20	19	18	17	16
Name	-	-	-	-	-	-	-	-	-	-	-	-	-	-	-	-
Type																
Reset	0	0	0	0	0	0	0	0	0	0	0	0	0	0	0	0
Bit	15	14	13	12	11	10	9	8	7	6	5	4	3	2	1	0
Name	LIMIT															
Type	R/W	R/W	R/W	R/W	R/W	R/W	R/W	R/W	R/W	R/W	R/W	R/W	R/W	R/W	R/W	R/W
Reset	1	1	1	1	1	1	1	1	1	1	1	1	1	1	1	1

This register is used to describe the buffer size of each VLC DMA buffer. Note that the value is counted in word (32-bit). Whenever the limit is reached and the corresponding interrupt control is enabled, an interrupt request will be generated.

LIMIT DMA Buffer Size, Count in Word (32-bit)

MP4+016Ch Encoder VLC DMA Current Word Register

MP4_ENC_VLC_WORD

Bit	31	30	29	28	27	26	25	24	23	22	21	20	19	18	17	16
Name	ADDR															
Type	RO	RO	RO	RO	RO	RO	RO	RO	RO	RO	RO	RO	RO	RO	RO	RO
Bit	15	14	13	12	11	10	9	8	7	6	5	4	3	2	1	0
Name	ADDR															
Type	RO	RO	RO	RO	RO	RO	RO	RO	RO	RO	RO	RO	RO	RO	RO	RO

This register provides the address information of a certain code word that is under process of video CODEC. SW reads it back after encode of a frame is done.

ADDR VLC DMA current Address

MP4+0170h Encoder VLC DMA Current Bit Count Register

MP4_ENC_VLC_BITCNT

Bit	31	30	29	28	27	26	25	24	23	22	21	20	19	18	17	16
Name	-	-	-	-	-	-	-	-	-	-	-	-	-	-	-	-
Type																
Bit	15	14	13	12	11	10	9	8	7	6	5	4	3	2	1	0
Name	-	-	-	-	-	-	-	-	-	-	-	BITCNT				
Type												RO	RO	RO	RO	RO

This register provides the bit position information of a certain Code Word that is under process of video CODEC.

BITCNT Current Bit Count

MTK Confidential Release for Konka

MP4+0174h Encoder VLC DMA Ring Buffer Ending Address Register

MP4_ENC_VLC_JUMP_FROM_ADDR

Bit	31	30	29	28	27	26	25	24	23	22	21	20	19	18	17	16
Name	JUMP_FROM_ADDR															
Type	R/W	R/W	R/W	R/W	R/W	R/W	R/W	R/W	R/W	R/W	R/W	R/W	R/W	R/W	R/W	R/W
Reset	1	1	1	1	1	1	1	1	1	1	1	1	1	1	1	1
Bit	15	14	13	12	11	10	9	8	7	6	5	4	3	2	1	0
Name	JUMP_FROM_ADDR															
Type	R/W	R/W	R/W	R/W	R/W	R/W	R/W	R/W	R/W	R/W	R/W	R/W	R/W	R/W	R/W	R/W
Reset	1	1	1	1	1	1	1	1	1	1	1	1	1	1	1	1

JUMP_FROM_ADDR The ending address of the current DMA buffer; when a jump takes place in VLC DMA address counter, the address will jump from the ending address of the current DMA buffer, which is JUMP_FROM_ADDR, to the starting address of the next DMA buffer, which is JUMP_TO_ADDR. To disable the ring buffer feature, set this register to all ones; note that the address counter will not jump until done with the content in memory with address as JUMP_FROM_ADDR. So the memory content with address JUMP_FROM_ADDR will be executed by hardware.

MP4+0178h Encoder VLC DMA Ring Buffer Starting Address Register

MP4_ENC_VLC_JUMP_TO_ADDR

Bit	31	30	29	28	27	26	25	24	23	22	21	20	19	18	17	16
Name	JUMP_TO_ADDR															
Type	R/W	R/W	R/W	R/W	R/W	R/W	R/W	R/W	R/W	R/W	R/W	R/W	R/W	R/W	R/W	R/W
Reset	1	1	1	1	1	1	1	1	1	1	1	1	1	1	1	1
Bit	15	14	13	12	11	10	9	8	7	6	5	4	3	2	1	0
Name	JUMP_TO_ADDR															
Type	R/W	R/W	R/W	R/W	R/W	R/W	R/W	R/W	R/W	R/W	R/W	R/W	R/W	R/W	R/W	R/W
Reset	1	1	1	1	1	1	1	1	1	1	1	1	1	1	1	1

JUMP_TO_ADDR The starting address of the next DMA buffer; when a jump takes place in VLC DMA address counter, the address will jump from the ending address of the current DMA buffer, which is JUMP_FROM_ADDR, to the starting address of the next DMA buffer, which is JUMP_TO_ADDR; note that the address counter will not jump until done with the content in memory with address as JUMP_FROM_ADDR. So the memory content with address JUMP_FROM_ADDR will be executed by hardware.

6.17.2.2.5 Resync Marker

MP4+0180h MPEG4 Encoder Resync Marker Configuration 0 Register

MP4_ENC_RESYNC_CONF0

Bit	31	30	29	28	27	26	25	24	23	22	21	20	19	18	17	16
Name	EN	MODE	PERIOD_BITS													
Type	R/W	R/W	R/W	R/W	R/W	R/W	R/W	R/W	R/W	R/W	R/W	R/W	R/W	R/W	R/W	R/W
Reset	0	0	1	1	1	1	1	1	1	1	1	1	1	1	1	1
Bit	15	14	13	12	11	10	9	8	7	6	5	4	3	2	1	0

MTK Confidential Release for Konka

Name	PERIOD_BITS															
Type	R/W	R/W	R/W	R/W	R/W	R/W	R/W	R/W	R/W	R/W	R/W	R/W	R/W	R/W	R/W	R/W
Reset	1	1	1	1	1	1	1	1	1	1	1	1	1	1	1	1

EN Resync marker insertion enable

- **0** Disable resync marker insertion
- **1** Enable resync marker insertion

MODE Resync Marker insertion mode selection

- **0** resync marker is inserted based on number of bits
- **1** resync marker is inserted based on number of macroblocks

PERIOD_BITS Period in number of bits to insert resync marker; only effective when MODE is set to 0; hardware will insert resync marker at the next macroblock boundary once the bit length of a video packet exceeds this value.

MP4+0184h MPEG4 Encoder Resync Marker Configuration 1 Register MP4_ENC_RESYNC_CONF1

Bit	31	30	29	28	27	26	25	24	23	22	21	20	19	18	17	16
Name	-	-	-	-	-	-	-	-	-	-	-	-	-	-	-	HEC
Type	R/W	R/W	R/W	R/W	R/W	R/W	R/W	R/W	R/W	R/W	R/W	R/W	R/W	R/W	R/W	R/W
Reset	0	0	0	0	0	0	0	0	0	0	0	0	0	0	0	0
Bit	15	14	13	12	11	10	9	8	7	6	5	4	3	2	1	0
Name	PERIOD_MB															
Type	R/W	R/W	R/W	R/W	R/W	R/W	R/W	R/W	R/W	R/W	R/W	R/W	R/W	R/W	R/W	R/W
Reset	1	1	1	1	1	1	1	1	1	1	1	1	1	1	1	1

HEC Header Extension Code; indicates the value of header_extension_code in MPEG4 standard (ISO/IEC 14496-2)

- **0** header_extension_code is 0.
- **1** header_extension_code is 1.

PERIOD_MB Period in number of macroblocks (MB) to insert resync marker; only effective when MODE is set to 1; hardware will insert resync marker at the next macroblock boundary once the number of macroblock in current video packet exceeds this value.

MP4+0188h MPEG4 Encoder Local Time Base Register MP4_ENC_TIME_BASE

Bit	31	30	29	28	27	26	25	24	23	22	21	20	19	18	17	16
Name	-	-	-	-	-	-	-	MODULO_TIME_BASE					BW			
Type	R/W	R/W	R/W	R/W	R/W	R/W	R/W	R/W	R/W	R/W	R/W	R/W	R/W	R/W	R/W	R/W
Reset	0	0	0	0	0	0	0	0	0	0	0	0	0	0	0	0
Bit	15	14	13	12	11	10	9	8	7	6	5	4	3	2	1	0
Name	VOP_TIME_INCREMENT															
Type	R/W	R/W	R/W	R/W	R/W	R/W	R/W	R/W	R/W	R/W	R/W	R/W	R/W	R/W	R/W	R/W
Reset	0	0	0	0	0	0	0	0	0	0	0	0	0	0	0	0

MODULO_TIME_BASE Represent the value of modulo_time_base; value ranges from 0 to 31.

BW Bit width of vop_time_increment. The real bit-width of vop_time_increment is (BW + 1), ranging from 1 to 16.

VOP_TIME_INCREMENT Carries the value of vop_time_increment defined in MPEG4 standard (ISO/IEC 14496-2); the meaningful bit width of vop_time_increment is signaled by BW field.

MTK Confidential Release for Konka

6.17.2.3 Decoder

MP4+0200h Decoder Configuration Register **MP4_DEC_CODEC_CONF**

Bit	31	30	29	28	27	26	25	24	23	22	21	20	19	18	17	16
Name	-	-	-	-	-	-	-	-	-	-	-	-	-	-	-	CHECK_TV
Type																R/W
Reset	0	0	0	0	0	0	0	0	0	0	0	0	0	0	0	0
Bit	15	14	13	12	11	10	9	8	7	6	5	4	3	2	1	0
Name	DEBLOCK	COPY_REC	-	MC_BURST_EN	PMV	DQUAN	FME	HALF	STEP_LIMIT				VPGOB	DCT	IRQ	ENC
Type	R/W	R/W	R/W	R/W	R/W	R/W	R/W	R/W	R/W	R/W	R/W	R/W	R/W	R/W	R/W	R/W
Reset	0	0	0	0	0	0	0	0	0	0	0	0	0	0	0	0

This register is used to configure the operating conditions and modes of video CODEC.

ENC Video CODEC Operation Mode
- **0** Decode Mode
- **1** Encode Mode

IRQ Control for interrupt request
- **0** Disable the interrupt reporting mechanism
- **1** Enable the interrupt reporting mechanism

DCT DCT Control
- **0** Enable JPEG CODEC Operation
- **1** Enable MPEG-4 Video CODEC Operation

VPGOB Control for decoding Video Packet Header; keep this for legacy reason.
- **0** Disable: decoding in Video Packet Level. It means the software will take the responsibility for decoding packet header of each video packet.
- **1** Enable: decoding in Video Object Plane Level

STEP_LIMIT Step limit for Motion Estimation, for encode only; keep this for legacy reason. The total number of steps in a n-step search is STEP_LIMIT+2. Increasing STEP_LIMIT can increase search range of motion vectors.

HALF Motion Estimation uses half-pel resolution, for encode only; keep this for legacy reason.
- **0** Disable. Perform full pel motion estimation only
- **1** Enable. Perform full pel motion estimation first, then half pel motion estimation

FME Fast Motion Enhancement, for encode only; keep this for legacy reason.
- **0** Enable Four Step Search motion estimation algorithm
- **1** Enable Mediatek proprietary motion estimation algorithm. This algorithm can improve visual quality in fast motion pictures while maintaining the same quality as Four Step Search in slow motion pictures. Enabling this algorithm does not increase search time. Thus, set FME to 1 is recommended.

DQUAN Control for automatic update quantizer_scale process.
- **0** Disable
- **1** Enable

PMV Predictive Motion Vector Search, for encode only; keep this for legacy reason. This is a two pass search algorithm. This algorithm can co-operate with both four step search (FME=0) and Mediatek proprietary search (FME=1). The idea is to initially consider several highly likely predictors (starting points), perform motion estimation from these

MTK Confidential Release for Konka

predictors, and choose the best result among these predictors. In our approach, the two predictors approach is adopted. The origin (0,0) is considered as the predictor of first pass. The minimum BDM point found in first pass will be the predictor of the second pass. After finishing two-pass motion estimation, choose the best result between the two minimum BDM points. This algorithm can significantly improve PSNR by about 0.8dB. However, the search time will increase by about 60%. Setting PMV to 1 or 0 is the trade-off between visual quality and search time.

0 Disable

1 Enable

COPY_REC Enable signal to copy reconstructed memory to deblocking memory.

0 Disable

1 Enable

DEBLOCK Enable signal for deblocking mode. 3 different combination of DEBLOCK and COPY_REC are shown below

00 (DECLOCK = 0 & COPY_REC = 0) : disable both deblocking filter and memory copy from reconstructed memory to deblocking memory.

01 (DECLOCK = 0 & COPY_REC = 1) : disable both deblocking filter and memory copy from reconstructed memory to deblocking memory.

10 (DECLOCK = 1 & COPY_REC = 0) : Enable deblocking filter and save deblocked frame to deblocking memory.

11 (DECLOCK = 1 & COPY_REC = 1) : Disable deblocking filter and save non-deblocked frame to deblocking memory.

CHECK_TV Enable signal to check if TV codec is busy before starting decoding operation.

0 Do not check TV codec

1 Check TV codec

MP4+0204h Decoder Status Register MP4_DEC_STS

Bit	31	30	29	28	27	26	25	24	23	22	21	20	19	18	17	16
Name	STATE															
Type	RO	RO	RO	RO	RO	RO	RO	RO	RO	RO	RO	RO	RO	RO	RO	RO
Bit	15	14	13	12	11	10	9	8	7	6	5	4	3	2	1	0
Name	STATE															
Type	RO	RO	RO	RO	RO	RO	RO	RO	RO	RO	RO	RO	RO	RO	RO	RO

This register provides the state information of decoding sequencer for software program. It is a mirror of the HW one-hot sequencer state machine and can be used for debugging or IRQ status judging.

MP4+0208h Decoder Interrupt Mask Register MP4_DEC_IRQ_MASK

Bit	31	30	29	28	27	26	25	24	23	22	21	20	19	18	17	16
Name	-	-	-	-	-	-	-	-	-	-	-	-	-	-	-	-
Type																
Reset																
Bit	15	14	13	12	11	10	9	8	7	6	5	4	3	2	1	0
Name	-	-	-	-	-	-	-	-	-	-	DMA	BLOCK_DONE	DEC_DONE	MARKER	RLD	VLD
Type											R/W	R/W	R/W	R/W	R/W	R/W
Reset											1	1	1	1	1	1

MTK Confidential Release for Konka

This register contains mask bit for each interrupt sources in MPEG-4 Video Decoder. It allows each interrupt source to be disabled or masked out separately under software control. After System Reset or software reset, all bit values will be set to '0' to indicate that interrupt requests are enabled.

DMA Mask of VLC DMA interrupt.

BLOCK_DONE Mask of block procedure complete interrupt.

DEC_DONE Mask of decode complete interrupt.

MARK Mask of marker error interrupt in decode.

RLD Mask of run length coding error interrupt

VLD Mask of VLD error interrupt generated in decoding process.

MP4+020Ch Decoder Interrupt Status Register MP4_DEC_IRQ_STS

Bit	31	30	29	28	27	26	25	24	23	22	21	20	19	18	17	16
Name	-	-	-	-	-	-	-	-	-	-	-	-	-	-	-	-
Type																
Bit	15	14	13	12	11	10	9	8	7	6	5	4	3	2	1	0
Name	-	-	-	-	-	-	-	-	-	-	DMA	BLOCK_DONE	DEC_DONE	MARK	RLD	VLD
Type											RO	RO	RO	RO	RO	RO

This register allows software program to poll which interrupt source generates the interrupt request. A bit set to '1' indicates a corresponding active interrupt source. Note that IRQ control bit in MP4_DEC_CODEC_CONF should be enabled first in order to activate the interrupt reporting mechanism.

DMA Mask of VLC DMA interrupt. When decoder detects empty VLD stream buffer, an interrupt will inform the driver SW to refill the VLD stream buffer.

BLOCK_DONE Block decode or encode complete. A normal complete flag if the SW needs a block-based HW decoding or encoding..

DEC_DONE Decode complete. A normal condition when decoding procedure is done.

MARK Marker decode error occurred.

RLD Run length coding error. Generated when the accumulated run value is larger than 64 (the 8x8 block memory size).

VLD VLD error of decoding process. Generated when a code can not be correctly referenced in VLD table

MP4+0210h Decoder Interrupt Acknowledge Register MP4_DEC_IRQ_ACK

Bit	31	30	29	28	27	26	25	24	23	22	21	20	19	18	17	16
Name	-	-	-	-	-	-	-	-	-	-	-	-	-	-	-	-
Type																
Bit	15	14	13	12	11	10	9	8	7	6	5	4	3	2	1	0

MTK Confidential Release for Konka

Name	-	-	-	-	-	-	-	-	-	-	DMA	BLOCK_DONE	DEC_DONE	MARK	RLD	VLD
Type											WC	WC	WC	WC	WC	WC

This register provides a mean for software program to acknowledge the interrupt source. Writing a '1' to the specific bit position will result in an acknowledgement to the corresponding interrupt source.

VLD Variable Length Decoding Error
RLD Run Length Decoding Error
MARK Marker Decoding Error
DEC_DONE Decode Task Complete
BLOCK_DONE Block Task Complete
DMA VLC DMA Buffer Limit Reached

6.17.2.3.1 Base Address

MP4+0224h Decoder Reference VOP Base Address Register — MP4_DEC_REF_ADDR

Bit	31	30	29	28	27	26	25	24	23	22	21	20	19	18	17	16
Name	REF_ADDR															
Type	R/W	R/W	R/W	R/W	R/W	R/W	R/W	R/W	R/W	R/W	R/W	R/W	R/W	R/W	R/W	R/W
Bit	15	14	13	12	11	10	9	8	7	6	5	4	3	2	1	0
Name	REF_ADDR														-	-
Type	R/W	R/W	R/W	R/W	R/W	R/W	R/W	R/W	R/W	R/W	R/W	R/W	R/W	R/W		

This register describes the starting address of Reference VOP Frame. Note that this base address should be 4-byte aligned. And the required frame buffer size should be: numbers of pixel per frame * 1.5 bytes (YUV420 format).

REF Reference VOP Base Address.

MP4+0228h Decoder Reconstructed VOP Base Address Register — MP4_DEC_REC_ADDR

Bit	31	30	29	28	27	26	25	24	23	22	21	20	19	18	17	16
Name	REC_ADDR															
Type	R/W	R/W	R/W	R/W	R/W	R/W	R/W	R/W	R/W	R/W	R/W	R/W	R/W	R/W	R/W	R/W
Bit	15	14	13	12	11	10	9	8	7	6	5	4	3	2	1	0
Name	REC_ADDR														-	-
Type	R/W	R/W	R/W	R/W	R/W	R/W	R/W	R/W	R/W	R/W	R/W	R/W	R/W	R/W		

This register describes the starting address of Reconstructed VOP Frame. Note that this base address should be 4-byte aligned. And the required frame buffer size should be: numbers of pixel per frame * 1.5 bytes (YUV420 format).

REC Reconstructed VOP Base Address.

MP4+022Ch Decoder Deblocking Base Address Register — MP4_DEC_DEBLOCK_ADDR

Bit	31	30	29	28	27	26	25	24	23	22	21	20	19	18	17	16
Name	DEBLOCK_ADDR															
Type	R/W	R/W	R/W	R/W	R/W	R/W	R/W	R/W	R/W	R/W	R/W	R/W	R/W	R/W	R/W	R/W
Bit	15	14	13	12	11	10	9	8	7	6	5	4	3	2	1	0

MTK Confidential Release for Konka

Name	DEBLOCK_ADDR														-	-
Type	R/W	R/W	R/W	R/W	R/W	R/W	R/W	R/W	R/W	R/W	R/W	R/W	R/W	R/W		

This register describes the starting address of deblocking frame. Note that this base address should be 4-byte aligned. And the required frame buffer size should be: numbers of pixel per frame * 1.5 bytes (YUV420 format).

DEBLOCK_ADDR Deblocking Base Address.

MP4+0230h Decoder Data Load-Store LSB Base Address Register MP4_DEC_DATA_STORE_ADDR

Bit	31	30	29	28	27	26	25	24	23	22	21	20	19	18	17	16
Name	STORE															
Type															R/W	R/W
Bit	15	14	13	12	11	10	9	8	7	6	5	4	3	2	1	0
Name	STORE														-	-
Type	R/W	R/W	R/W	R/W	R/W	R/W	R/W	R/W	R/W	R/W	R/W	R/W	R/W	R/W		

This register describes the LSB address of memory buffer used to store the macroblock header, Intra DC values and motion vectors as decoding data-partitioned MPEG4 files. Note that this base address should be 4-byte aligned. And the required buffer size for encoder and decoder should be: 3K bytes and number of macroblock per frame * 32 bytes, respectively.

STORE LSB address of VLE Data Load-Store buffer

MP4+0234h DC/AC Prediction Storage LSB Base Address Register MP4_DEC_DACP_ADDR

Bit	31	30	29	28	27	26	25	24	23	22	21	20	19	18	17	16
Name	DACP															
Type															R/W	R/W
Bit	15	14	13	12	11	10	9	8	7	6	5	4	3	2	1	0
Name	DACP														-	-
Type	R/W	R/W	R/W	R/W	R/W	R/W	R/W	R/W	R/W	R/W	R/W	R/W	R/W	R/W		

This register describes the LSB address of DC/AC Prediction Storage buffer. Note that this base address should be 4-byte aligned. And the required buffer size for encoder and decoder should be: 1K bytes and 4K bytes, respectively.

DACP LSB address of DC/AC Prediction Storage buffer

MP4+0238h Motion Vector Storage LSB Base Address Register MP4_DEC_MVP_ADDR

Bit	31	30	29	28	27	26	25	24	23	22	21	20	19	18	17	16
Name	MVP_ADDR															
Type															R/W	R/W
Bit	15	14	13	12	11	10	9	8	7	6	5	4	3	2	1	0
Name	MVP_ADDR														-	-
Type	R/W	R/W	R/W	R/W	R/W	R/W	R/W	R/W	R/W	R/W	R/W	R/W	R/W	R/W		

This register describes the LSB address of Motion Vector Storage buffer. Note that this base address should be 4-byte aligned. And the required buffer size for encoder should be mb_x_limit * 2 * 4 bytes, which equals to 320 Bytes for VGA size.

MVP_ADDR LSB address of Motion Vector Storage buffer

MTK Confidential Release for Konka

6.17.2.3.2 Data Structure

MP4+0240h Decoder VOP Structure 0 Register

MP4_DEC_VOP_STRUCT0

Bit	31	30	29	28	27	26	25	24	23	22	21	20	19	18	17	16
Name	-	-	-	-	-	-	-	-	-	-	-	-	-	-		ROUND
Type																R/W
Bit	15	14	13	12	11	10	9	8	7	6	5	4	3	2	1	0
Name	VLCTHR			QUANT					FCODE			SHORT	-	RVLC	DATA	TYPE
Type	R/W	R/W	R/W	R/W	R/W	R/W	R/W	R/W	R/W	R/W	R/W	R/W	R/W	R/W	R/W	R/W

This register is used to describe the header information of a certain Video Object Plane that is going to be processed by video CODEC.

TYPE vop_coding_type definition, for both decode and encode.

- **0** This is a P-VOP frame (inter frame)
- **1** This is an I-VOP frame (intra frame)

DATA data_partitioned, for decode only.

- **0** Data stream is in non-data-partitioned mode
- **1** Data stream is in data-partitioned mode

RVLC resversible_vlc, for decode only.

- **0** Data stream contains no reversible VLC information
- **1** Data stream uses reversible VLC tables.

SHORT short_video_header; for both decode and encode

- **0** Normal MPEG-4 format
- **1** H.263 Compatible format

FCODE fcode size setting for both decode and encode, ranges from 0 to 7.

QUANT vop_quant. For both decode and encode. Quantizer scale of the current frame. For variable Q in decode mode, QUANT is an initial setting of the current frame.

VLCTHR intra_dc_vlc_thr. For decode only. According to VLCTHR, the decoder has to switch from intra DC mode to inter DC mode when the quantizer_scale is larger than a pre-defined value. VLCTHR ranges from 0 to 7.

ROUND Rounding type of half-pel motion compensation. ROUND==1 means truncation toward zero (the pixel value is always larger than 0); ROUND==0 means rounding-off addition.

MP4+0244h Decoder VOP Structure 1 Register

MP4_DEC_VOP_STRUCT1

Bit	31	30	29	28	27	26	25	24	23	22	21	20	19	18	17	16
Name	-	-	-	HECBIT					-	-	-	-	MBLENGTH			
Type				R/W	R/W	R/W	R/W	R/W					R/W	R/W	R/W	R/W
Bit	15	14	13	12	11	10	9	8	7	6	5	4	3	2	1	0
Name	-	-	-	YLIMIT					-	-	-	XLIMIT				
Type	R/W	R/W	R/W	R/W	R/W	R/W	R/W	R/W	R/W	R/W	R/W	R/W	R/W	R/W	R/W	R/W

This register is used by software program to control the start position and count limit of macroblock for a certain Video Packet or Video Object Plane that is going to be processed by video CODEC.

XLIMIT Macroblock count in X direction of a frame.

MTK Confidential Release for Konka

YLIMIT Macroblock count in Y direction of a frame.

MBLENGTH Bit count of Macroblock Number in Video Packet Header. It is a value defined by the following formula: MBCNT = (XLIMIT+15)/16 * (YLIMIT+15)/16. For larger MBCNT, we have larger MBLENGTH. MBLENGTH is ranged from 1 to 14.

HECBIT Bit count of header extension code in Video Packet Header; this section includes modulo_time_base, vop_time_increment, vop_coding_type, intra_dc_vlc_thr and vop_fcode_forward(only in P-VOP).

MP4+0248h Decoder VOP Structure 2 Register

MP4_DEC_VOP_STRUCT2

Bit	31	30	29	28	27	26	25	24	23	22	21	20	19	18	17	16
Name	-	-	-	-	-	-	-	MBNO								
Type								R/W	R/W	R/W	R/W	R/W	R/W	R/W	R/W	R/W
Bit	15	14	13	12	11	10	9	8	7	6	5	4	3	2	1	0
Name	-	-	-	VP_YPOS					-	-	-	VP_XPOS				
Type				R/W	R/W	R/W	R/W	R/W				R/W	R/W	R/W	R/W	R/W

This register is used by software program to control the start position and count limit of macroblock for a certain Video Packet or Video Object Plane that is going to be processed by video CODEC.

VP_XPOS Starting position of the current Video Packet in X coordinate.

VP_YPOS Starting position of the current Video Packet in Y coordinate.

MBNO Macroblock count limit for a video packet or frame. For a CIF frame the value will be 396.

MP4+024Ch Decoder MB Structure 0 Register

MP4_DEC_MB_STRUCT0

Bit	31	30	29	28	27	26	25	24	23	22	21	20	19	18	17	16
Name	-	-	-	-	-	-	-	-	-	-	-	-	-	QUANTIZER		
Type														R/W	R/W	R/W
Bit	15	14	13	12	11	10	9	8	7	6	5	4	3	2	1	0
Name	QUANTIZER		DCVLC	AC	DQUANT		PATTERN						TYPE			CODED
Type	R/W	R/W	R/W	R/W	R/W	R/W	R/W	R/W	R/W	R/W	R/W	R/W	R/W	R/W	R/W	R/W

This register is used to store the header information of the current macroblock. This register is mostly used for debugging. Also used to provide hardware certain header information if all header parsing is done by software instead of hardware.

CODED not_coded flag of current macroblock; not_coded can be decoded by hardware from macroblock header.

TYPE mb_coding_type of current macroblock; mb_coding_type can be decoded by hardware from mcbpc in macroblck header.

PATTERN pattern_code of current macroblock; pattern_code can be decoded by hardware from cbpc and cbpy in macroblock header.

DQUANT dquant. It can be –2, -1, +1 or +2; total 4 possible choices using 2 bits to represent; dquant can be decoded by hardware from macroblock header.

AC ac_pred_flag. It decides whether AC prediction is needed; always 0 in encoder; ac_pred_flag can be decoded by hardware from macroblock header.

DCVLC use_intra_dc_vlc. If this bit is 0, intra AC VLC decode is used (no intra DC exists in current macroblock).

QUANTIZER quantizer_scale, ranged from 1 to 31. It can be variable if we have dquant values.

MTK Confidential Release for Konka

6.17.2.3.3 VLC DMA

.

MP4+0260h Decoder VLC DMA Base Address Register

MP4_DEC_VLC_BASE_ADDR

Bit	31	30	29	28	27	26	25	24	23	22	21	20	19	18	17	16
Name	BASE															
Type	R/W	R/W	R/W	R/W	R/W	R/W	R/W	R/W	R/W	R/W	R/W	R/W	R/W	R/W	R/W	R/W
Bit	15	14	13	12	11	10	9	8	7	6	5	4	3	2	1	0
Name	BASE														-	-
Type	R/W	R/W	R/W	R/W	R/W	R/W	R/W	R/W	R/W	R/W	R/W	R/W	R/W	R/W		

This register is used to describe the address of started Code Word for each VLC DMA buffer. Note that this base address should be 4-byte aligned.

BASE VLC DMA Base Address

MP4+0264h Decoder VLC DMA Base Bit Count Register

MP4_DEC_VLC_BASE_BITCNT

Bit	31	30	29	28	27	26	25	24	23	22	21	20	19	18	17	16
Name	-	-	-	-	-	-	-	-	-	-	-	-	-	-	-	-
Type																
Bit	15	14	13	12	11	10	9	8	7	6	5	4	3	2	1	0
Name	-	-	-	-	-	-	-	-	-	-	-	BIT				
Type												R/W	R/W	R/W	R/W	R/W

This register is used to describe the starting bit position of the 1st Code Word in the 1st VLC DMA buffer. For the following VLC DMA buffers, it is assumed that they are all 4-byte aligned and always start from bit position "0".

BIT Start of Bit at the 1st Code Word of 1st DMA Buffer

MP4+0268h Decoder VLC DMA Buffer Limit Register

MP4_DEC_VLC_LIMIT

Bit	31	30	29	28	27	26	25	24	23	22	21	20	19	18	17	16
Name	-	-	-	-	-	-	-	-	-	-	-	-	-	-	-	-
Type																
Reset	0	0	0	0	0	0	0	0	0	0	0	0	0	0	0	0
Bit	15	14	13	12	11	10	9	8	7	6	5	4	3	2	1	0
Name	LIMIT															
Type	R/W	R/W	R/W	R/W	R/W	R/W	R/W	R/W	R/W	R/W	R/W	R/W	R/W	R/W	R/W	R/W
Reset	1	1	1	1	1	1	1	1	1	1	1	1	1	1	1	1

This register is used to describe the buffer size of each VLC DMA buffer. Note that the value is counted in word (32-bit). Whenever the limit is reached and the corresponding interrupt control is enabled, an interrupt request will be generated.

LIMIT DMA Buffer Size, Count in Word (32-bit)

MP4+026Ch Decoder VLC DMA Current Word Register

MP4_DEC_VLC_WORD

Bit	31	30	29	28	27	26	25	24	23	22	21	20	19	18	17	16
Name	ADDR															

MTK Confidential Release for Konka

Type	RO	RO	RO	RO	RO	RO	RO	RO	RO	RO	RO	RO	RO	RO	RO	RO
Bit	15	14	13	12	11	10	9	8	7	6	5	4	3	2	1	0
Name	ADDR															
Type	RO	RO	RO	RO	RO	RO	RO	RO	RO	RO	RO	RO	RO	RO	RO	RO

This register provides the address information of a certain code word that is under process of video CODEC. SW reads it back after decode of a frame is done.

ADDR VLC DMA current Address

MP4+0270h Decoder VLC DMA Current Bit Count Register MP4_DEC_VLC_BITCNT

Bit	31	30	29	28	27	26	25	24	23	22	21	20	19	18	17	16
Name	-	-	-	-	-	-	-	-	-	-	-	-	-	-	-	-
Type																
Bit	15	14	13	12	11	10	9	8	7	6	5	4	3	2	1	0
Name	-	-	-	-	-	-	-	-	-	-	-	BITCNT				
Type												RO	RO	RO	RO	RO

This register provides the bit position information of a certain Code Word that is under process of video CODEC.

BITCNT Current Bit Count

MP4+0274h Decoder VLC DMA Ring Buffer Ending Address Register MP4_DEC_VLC_JUMP_FROM_ADDR

Bit	31	30	29	28	27	26	25	24	23	22	21	20	19	18	17	16
Name	JUMP_FROM_ADDR															
Type	R/W	R/W	R/W	R/W	R/W	R/W	R/W	R/W	R/W	R/W	R/W	R/W	R/W	R/W	R/W	R/W
Reset	1	1	1	1	1	1	1	1	1	1	1	1	1	1	1	1
Bit	15	14	13	12	11	10	9	8	7	6	5	4	3	2	1	0
Name	JUMP_FROM_ADDR															
Type	R/W	R/W	R/W	R/W	R/W	R/W	R/W	R/W	R/W	R/W	R/W	R/W	R/W	R/W	R/W	R/W
Reset	1	1	1	1	1	1	1	1	1	1	1	1	1	1	1	1

JUMP_FROM_ADDR The ending address of the current DMA buffer; when a jump takes place in VLC DMA address counter, the address will jump from the ending address of the current DMA buffer, which is JUMP_FROM_ADDR, to the starting address of the next DMA buffer, which is JUMP_TO_ADDR. To disable the ring buffer feature, set this register to all ones; note that the address counter will not jump until done with the content in memory with address as JUMP_FROM_ADDR. So the memory content with address JUMP_FROM_ADDR will be executed by hardware.

MP4+0278h Decoder VLC DMA Ring Buffer Starting Address Register MP4_DEC_VLC_JUMP_TO_ADDR

Bit	31	30	29	28	27	26	25	24	23	22	21	20	19	18	17	16
Name	JUMP_TO_ADDR															
Type	R/W	R/W	R/W	R/W	R/W	R/W	R/W	R/W	R/W	R/W	R/W	R/W	R/W	R/W	R/W	R/W
Reset	1	1	1	1	1	1	1	1	1	1	1	1	1	1	1	1
Bit	15	14	13	12	11	10	9	8	7	6	5	4	3	2	1	0
Name	JUMP_TO_ADDR															
Type	R/W	R/W	R/W	R/W	R/W	R/W	R/W	R/W	R/W	R/W	R/W	R/W	R/W	R/W	R/W	R/W

MTK Confidential Release for Konka

Reset	1	1	1	1	1	1	1	1	1	1	1	1	1	1	1	1

JUMP_TO_ADDR The starting address of the next DMA buffer; when a jump takes place in VLC DMA address counter, the address will jump from the ending address of the current DMA buffer, which is JUMP_FROM_ADDR, to the starting address of the next DMA buffer, which is JUMP_TO_ADDR; note that the address counter will not jump until done with the content in memory with address as JUMP_FROM_ADDR. So the memory content with address JUMP_FROM_ADDR will be executed by hardware.

6.17.2.4 Core

MP4+0300h Core Configuration Register MP4_CORE_CONF

Bit	31	30	29	28	27	26	25	24	23	22	21	20	19	18	17	16
Name	-	-	-	-	-	-	-	-	-	-	-	-	-	-	-	-
Type									R/W	R/W	R/W	R/W	R/W	R/W	R/W	R/W
Reset	0	0	0	0	0	0	0	0	0	0	0	0	0	0	0	0
Bit	15	14	13	12	11	10	9	8	7	6	5	4	3	2	1	0
Name	DEBLOCKING	COPY_REC	-	MC_BURST_EN	PMV	DQUAN	FME	HALF	STEP_LIMIT				VPGOB	DCT	IRQ	ENC
Type	R/W	R/W	R/W	R/W	R/W	R/W	R/W	R/W	R/W	R/W	R/W	R/W	R/W	R/W	R/W	R/W
Reset	0	0	0	0	0	0	0	0	0	0	0	0	0	0	0	0

This register is used to configure the operating conditions and modes of video CODEC.

ENC Video CODEC Operation Mode

- **0** Decode Mode
- **1** Encode Mode

IRQ Control for interrupt request

- **0** Disable the interrupt reporting mechanism
- **1** Enable the interrupt reporting mechanism

DCT DCT Control

- **0** Enable JPEG CODEC Operation
- **1** Enable MPEG-4 CODEC Operation

VPGOB Control for decoding Video Packet Header.

- **0** Disable: decoding in Video Packet Level. It means the software will take the responsibility for decoding packet header of each video packet.
- **1** Enable: decoding in Video Object Plane Level

STEP_LIMIT Step limit for Motion Estimation. The total number of steps in a n-step search is STEP_LIMIT+2. Increasing STEP_LIMIT can increase search range of motion vectors.

HALF Motion Estimation uses half-pel resolution

- **0** Disable. Perform full pel motion estimation only
- **1** Enable. Perform full pel motion estimation first, then half pel motion estimation

FME Fast Motion Enhancement

- **0** Enable Four Step Search motion estimation algorithm
- **1** Enable Mediatek proprietary motion estimation algorithm. This algorithm can improve visual quality in fast motion pictures while maintaining the same quality as Four Step Search in slow motion pictures. Enabling this algorithm does not increase search time. Thus, set FME to 1 is recommended.

MTK Confidential Release for Konka

DQUAN Control for automatic update quantizer_scale process.

0 Disable

1 Enable

PMV Predictive Motion Vector Search. This is a two pass search algorithm. This algorithm can co-operate with both four step search (FME=0) and Mediatek proprietary search (FME=1). The idea is to initially consider several highly likely predictors (starting points), perform motion estimation from these predictors, and choose the best result among these predictors. In our approach, the two predictors approach is adopted. The origin (0,0) is considered as the predictor of first pass. The minimum BDM point found in first pass will be the predictor of the second pass. After finishing two-pass motion estimation, choose the best result between the two minimum BDM points. This algorithm can significantly improve PSNR by about 0.8dB. However, the search time will increase by about 60%. Setting PMV to 1 or 0 is the trade-off between visual quality and search time.

0 Disable

1 Enable

MC_BURST_EN 2-beat Burst mode enable signal in MC.

0 Diable

1 Enable

COPY_REC Enable signal to copy reconstructed memory to deblocking memory.

0 Disable

1 Enable

DEBLOCK Enable signal for deblocking mode. Please remember to configure Deblocking Base Address Register when DEBLOCK mode is enable.

3 different combination of DEBLOCK and COPY_REC are shown below

00 (DECLOCK = 0 & COPY_REC = 0) : disable both deblocking filter and memory copy from reconstructed memory to deblocking memory.

01 (DECLOCK = 0 & COPY_REC = 1) : disable both deblocking filter and memory copy from reconstructed memory to deblocking memory.

10 (DECLOCK = 1 & COPY_REC = 0) : Enable deblocking filter and save deblocked frame to deblocking memory.

11 (DECLOCK = 1 & COPY_REC = 1) : Disable deblocking filter and save non-deblocked frame to deblocking memory.

MP4+0304h Core Encoder Configuration Register

MP4_CORE_ENC_CONF

Bit	31	30	29	28	27	26	25	24	23	22	21	20	19	18	17	16
Name	-	-	-	-	-	PACKCNT										PACK
Type						R/W	R/W	R/W	R/W	R/W	R/W	R/W	R/W	R/W	R/W	R/W
Reset						0	0	0	0	0	0	0	0	0	0	0
Bit	15	14	13	12	11	10	9	8	7	6	5	4	3	2	1	0
Name	-	-	INTRA						-	-	SKIP					
Type	R/W	R/W	R/W	R/W	R/W	R/W	R/W	R/W			R/W	R/W	R/W	R/W	R/W	R/W
Reset	0	0	0	0	0	0	0	0			0	0	0	0	0	0

This register is used specially to configure the desired encode conditions and modes for video CODEC.

SKIP Threshold for deciding not_coded bit. The value of SKIP is programmed by software first. The first round of pattern code (*me_pattern_code* is set to 6'h0 whenever ($SAD_y + SDA_u + SAD_v$) <= skip_threshold*16 *not_coded* bit will be set if *pattern_code* = 6'h0 and motion vector = (0,0)

MTK Confidential Release for Konka

INTRA Threshold for deciding INTRA Coding in P frame. The value of INTRA is programmed by software first. The 3-bits macro-block type (*mb_type*) is set to 3'h0 (Inter MB) if SADy < *intra_threshold**1024. Otherwise, *mb_type* is set to 3'h3 (Intra_MB)

PACK Use Video Packet Mode

- **0** Disable
- **1** Enable

PACKCNT Desired Bit Counts for a Video Packet. Used in encode mode to define the largest VLE buffer size of a video packet

MP4+0308h Half Duplex Controller Status Register

MP4_DUPLEX_STS

Bit	31	30	29	28	27	26	25	24	23	22	21	20	19	18	17	16
Name									DUPLEX_STATE							
Type									RO	RO	RO	RO	RO	RO	RO	RO
Bit	15	14	13	12	11	10	9	8	7	6	5	4	3	2	1	0
Name	DUPLEX_STATE															
Type	RO	RO	RO	RO	RO	RO	RO	RO	RO	RO	RO	RO	RO	RO	RO	RO

This register is used to read back the current state of duplex controller in MPEG4 Codec.

DUPLEX_STATE Current state of duplex controller.

6.17.2.4.1 Base Addresses

MP4+0310h Core MSB Base Address Register

MP4_CORE_BASE

Bit	31	30	29	28	27	26	25	24	23	22	21	20	19	18	17	16
Name	CODEC												-	-	-	-
Type	R/W	R/W	R/W	R/W	R/W	R/W	R/W	R/W	R/W	R/W	R/W	R/W	R/W	R/W		
Bit	15	14	13	12	11	10	9	8	7	6	5	4	3	2	1	0
Name	-	-	-	-	-	-	-	-	-	-	-	-	-	-	-	-
Type																

This register describes the MSB address that is used for VLE Data Load-Store and DC/AC Prediction Storage buffers. FOR THE FOLLOWING HW-USED OFFSET ADDRESSES, their MSB's must be confined within 1Mega. In other words, results of (base address + offset addresses) should have the same value in bit range [31, 20].

CODEC MPEG-4/H.263 CODEC MSB Base Address

MP4+0314h Current VOP Base Address Register

MP4_CORE_VOP_ADDR

Bit	31	30	29	28	27	26	25	24	23	22	21	20	19	18	17	16
Name	VOP															
Type	RO	RO	RO	RO	RO	RO	RO	RO	RO	RO	RO	RO	RO	RO	R/W	R/W
Bit	15	14	13	12	11	10	9	8	7	6	5	4	3	2	1	0
Name	VOP														-	-
Type	R/W	R/W	R/W	R/W	R/W	R/W	R/W	R/W	R/W	R/W	R/W	R/W	R/W	R/W		

MTK Confidential Release for Konka

This register describes the starting address of Current VOP Frame that is going to be encoded. Note that this base address should be 4-byte aligned. And the required frame buffer size should be: numbers of pixel per frame * 1.5 bytes (YUV420 format).

VOP Current VOP Base Address.

MP4+0318h Core Reference VOP Base Address Register

MP4_CORE_REF_ADDR

Bit	31	30	29	28	27	26	25	24	23	22	21	20	19	18	17	16
Name	REF															
Type	RO	RO	RO	RO	RO	RO	RO	RO	RO	RO	RO	RO	RO	RO	R/W	R/W
Bit	15	14	13	12	11	10	9	8	7	6	5	4	3	2	1	0
Name	REF														-	-
Type	R/W	R/W	R/W	R/W	R/W	R/W	R/W	R/W	R/W	R/W	R/W	R/W	R/W	R/W		

This register describes the starting address of Reference VOP Frame. Note that this base address should be 4-byte aligned. And the required frame buffer size should be: numbers of pixel per frame * 1.5 bytes (YUV420 format).

REF Reference VOP Base Address.

MP4+031Ch Core Reconstructed VOP Base Address Register

MP4_CORE_REC_ADDR

Bit	31	30	29	28	27	26	25	24	23	22	21	20	19	18	17	16
Name	REC															
Type	RO	RO	RO	RO	RO	RO	RO	RO	RO	RO	RO	RO	RO	RO	R/W	R/W
Bit	15	14	13	12	11	10	9	8	7	6	5	4	3	2	1	0
Name	REC														-	-
Type	R/W	R/W	R/W	R/W	R/W	R/W	R/W	R/W	R/W	R/W	R/W	R/W	R/W	R/W		

This register describes the starting address of Reconstructed VOP Frame. Note that this base address should be 4-byte aligned. And the required frame buffer size should be: numbers of pixel per frame * 1.5 bytes (YUV420 format).

REC Reconstructed VOP Base Address.

MP4+0320h Core Deblocking Base Address Register

MP4_CORE_DEBLOCK_ADDR

Bit	31	30	29	28	27	26	25	24	23	22	21	20	19	18	17	16
Name	DEBLOCK_ADDR															
Type	RO	RO	RO	RO	RO	RO	RO	RO	RO	RO	RO	RO	RO	RO	R/W	R/W
Bit	15	14	13	12	11	10	9	8	7	6	5	4	3	2	1	0
Name	DEBLOCK_ADDR														-	-
Type	R/W	R/W	R/W	R/W	R/W	R/W	R/W	R/W	R/W	R/W	R/W	R/W	R/W	R/W		

This register describes the starting address of deblocking frame. Note that this base address should be 4-byte aligned. And the required frame buffer size should be: numbers of pixel per frame * 1.5 bytes (YUV420 format).

DEBLOCK_ADDR Deblocking Base Address.

MTK Confidential Release for Konka

MP4+0324h Core VLE Data Load-Store LSB Base Address Register MP4_CORE_DATA_STORE_ADDR

Bit	31	30	29	28	27	26	25	24	23	22	21	20	19	18	17	16
Name	STORE															
Type															R/W	R/W
Bit	15	14	13	12	11	10	9	8	7	6	5	4	3	2	1	0
Name	STORE														-	-
Type	R/W	R/W	R/W	R/W	R/W	R/W	R/W	R/W	R/W	R/W	R/W	R/W	R/W	R/W		

This register describes the LSB address of VLE Data Load-Store buffer in data-partitioned mode. Note that this base address should be 4-byte aligned. And the required buffer size for encoder and decoder should be: 3K bytes and number of macroblock per frame * 32 bytes, respectively.

STORE LSB address of VLE Data Load-Store buffer

MP4+0328h Core DC/AC Prediction Storage LSB Base Address Register MP4_CORE_DACP_ADDR

Bit	31	30	29	28	27	26	25	24	23	22	21	20	19	18	17	16
Name	DACP															
Type															R/W	R/W
Bit	15	14	13	12	11	10	9	8	7	6	5	4	3	2	1	0
Name	DACP														-	-
Type	R/W	R/W	R/W	R/W	R/W	R/W	R/W	R/W	R/W	R/W	R/W	R/W	R/W	R/W		

This register describes the LSB address of DC/AC Prediction Storage buffer. Note that this base address should be 4-byte aligned. And the required buffer size for encoder and decoder should be: 512 bytes and 2K bytes, respectively.

DACP LSB address of DC/AC Prediction Storage buffer

MP4+032Ch Core Motion Vector Storage LSB Base Address Register MP4_CORE_MVP_ADDR

Bit	31	30	29	28	27	26	25	24	23	22	21	20	19	18	17	16
Name	MVD_ADDR															
Type															R/W	R/W
Bit	15	14	13	12	11	10	9	8	7	6	5	4	3	2	1	0
Name	MVD_ADDR														-	-
Type	R/W	R/W	R/W	R/W	R/W	R/W	R/W	R/W	R/W	R/W	R/W	R/W	R/W	R/W		

This register describes the LSB address of Motion Vector Storage buffer. Note that this base address should be 4-byte aligned. And the required buffer size for encoder should be mb_x_limit * 2 * 4 bytes, which equals to 320 Bytes for VGA size.

MVD_ADDR LSB address of Motion Vector Storage buffer

6.17.2.4.2 Data Structure

MP4+0330h Core VOP Structure 0 Register MP4_CORE_VOP_STRUCT0

Bit	31	30	29	28	27	26	25	24	23	22	21	20	19	18	17	16

MTK Confidential Release for Korka

Name	-	-	-	-	-	-	-	-	-	-	-	-	-	-		ROUND
Type																R/W
Bit	15	14	13	12	11	10	9	8	7	6	5	4	3	2	1	0
Name	VLCTHR			QUANT					FCODE			SHORT	-	RVLC	DATA	TYPE
Type	R/W	R/W	R/W	R/W	R/W	R/W	R/W	R/W	R/W	R/W	R/W	R/W	R/W	R/W	R/W	R/W

This register is used to describe the header information of a certain Video Object Plane that is going to be processed by video CODEC.

TYPE vop_coding_type definition, for both decode and encode.

- **0** This is a P-VOP frame (inter frame)
- **1** This is an I-VOP frame (intra frame)

DATA data_partitioned, for decode only.

- **0** Data stream is in non-data-partitioned mode
- **1** Data stream is in data-partitioned mode

RVLC resversible_vlc, for decode only.

- **0** Data stream contains no reversible VLC information
- **1** Data stream uses reversible VLC tables.

SHORT short_video_header; for both decode and encode

- **0** Normal MPEG-4 format
- **1** H.263 Compatible format

FCODE fcode size setting for both decode and encode, ranges from 0 to 7.

QUANT vop_quant. For both decode and encode. Quantizer scale of the current frame. For variable Q in decode mode, QUANT is an initial setting of the current frame.

VLCTHR intra_dc_vlc_thr. For decode only. According to VLCTHR, the decoder has to switch from intra DC mode to inter DC mode when the quantizer_scale is larger than a pre-defined value. VLCTHR ranges from 0 to 7.

ROUND Rounding type of half-pel motion compensation. ROUND==1 means truncation toward zero (the pixel value is always larger than 0); ROUND==0 means rounding-off addition.

MP4+0334h Core VOP Structure 1 Register

MP4_CORE_VOP_STRUCT1

Bit	31	30	29	28	27	26	25	24	23	22	21	20	19	18	17	16
Name	-	-	-	HECBIT					-	-	-	-	MBLENGTH			
Type				R/W	R/W	R/W	R/W	R/W					R/W	R/W	R/W	R/W
Bit	15	14	13	12	11	10	9	8	7	6	5	4	3	2	1	0
Name	-	-	-	YLIMIT					-	-	-	XLIMIT				
Type	R/W	R/W	R/W	R/W	R/W	R/W	R/W	R/W	R/W	R/W	R/W	R/W	R/W	R/W	R/W	R/W

This register is used by software program to control the start position and count limit of macroblock for a certain Video Packet or Video Object Plane that is going to be processed by video CODEC.

XLIMIT Macroblock count in X direction of a frame.

YLIMIT Macroblock count in Y direction of a frame.

MBLENGTH Bit count of Macroblock Number in Video Packet Header. It is a value defined by the following formula: MBCNT = (XLIMIT+15)/16 * (YLIMIT+15)/16. For larger MBCNT, we have larger MBLENGTH. MBLENGTH is ranged from 1 to 14.

HECBIT Bit count of extension header code in Video Packet Header

MTK Confidential Release for Konka

MP4+0338h Core VOP Structure 2 Register

MP4_CORE_VOP_STRUCT2

Bit	31	30	29	28	27	26	25	24	23	22	21	20	19	18	17	16
Name	-	-	-	-	-	-	-	MBNO								
Type								R/W	R/W	R/W	R/W	R/W	R/W	R/W	R/W	R/W
Bit	15	14	13	12	11	10	9	8	7	6	5	4	3	2	1	0
Name	-	-	-	VP_YPOS					-	-	-	VP_XPOS				
Type				R/W	R/W	R/W	R/W	R/W				R/W	R/W	R/W	R/W	R/W

This register is used by software program to control the start position and count limit of macroblock for a certain Video Packet or Video Object Plane that is going to be processed by video CODEC.

VP_XPOS Starting position of current Video Packet in X coordinate that the SW wants to update.
VP_YPOS Starting position of current Video Packet in Y coordinate that the SW wants to update.
MBNO Macroblock count limit for a video packet or frame. For a CIF frame the value will be 396.

MP4+033Ch Core VOP Structure 3 Register

MP4_CORE_VOP_STRUCT3

Bit	31	30	29	28	27	26	25	24	23	22	21	20	19	18	17	16
Name	-	-	-	-	-	-	-	MBNO								
Type								RO	RO	RO	RO	RO	RO	RO	RO	RO
Bit	15	14	13	12	11	10	9	8	7	6	5	4	3	2	1	0
Name	-	-	-	YPOS					-	-	-	XPOS				
Type				RO	RO	RO	RO	RO				RO	RO	RO	RO	RO

This register provides the position and count information of a certain macroblock that is currently under process of video CODEC.

XPOS Current Macroblock Position in X coordinate
YPOS Current Macroblock Position in Y coordinate
MBNO Current Macroblock Count

MP4+0340h Core MB Structure 0 Register

MP4_CORE_MB_STRUCT0

Bit	31	30	29	28	27	26	25	24	23	22	21	20	19	18	17	16
Name	-	-	-	-	-	-	-	-	-	-	-	-	-	QUANTIZER		
Type														R/W	R/W	R/W
Bit	15	14	13	12	11	10	9	8	7	6	5	4	3	2	1	0
Name	QUANTIZER		DCVLC	AC	DQUANT		PATTERN						TYPE			CODED
Type	R/W	R/W	R/W	R/W	R/W	R/W	R/W	R/W	R/W	R/W	R/W	R/W	R/W	R/W	R/W	R/W

This register is used to store the header information of current macroblock. This register is mostly used for debugging. Also used to provide hardware certain header information if all header parsing is done by software instead of hardware.

CODED not_coded flag of current macroblock; not_coded can be decoded by hardware from macroblock header.
TYPE mb_coding_type of current macroblock; mb_coding_type can be decoded by hardware from mcbpc in macroblck header.
PATTERN pattern_code of current macroblock; pattern_code can be decoded by hardware from cbpc and cbpy in macroblock header.

MTK Confidential Release for Korka

DQUANT dquant. It can be –2, -1, +1 or +2; total 4 possible choices using 2 bits to represent; dquant can be decoded by hardware from macroblock header.

AC ac_pred_flag. It decides whether AC prediction is needed; always 0 in encoder; ac_pred_flag can be decoded by hardware from macroblock header.

DCVLC use_intra_dc_vlc. If this bit is 0, intra AC VLC decode is used (no intra DC exists in current macroblock).

QUANTIZER quantizer_scale, ranged from 1 to 31. It can be variable if we have dquant values.

MP4+0344h Core MB Structure 1 Register

MP4_CORE_MB_STRUCT1

Bit	31	30	29	28	27	26	25	24	23	22	21	20	19	18	17	16
Name	-	-	-	-	DC[1]											
Type					R/W	R/W	R/W	R/W	R/W	R/W	R/W	R/W	R/W	R/W	R/W	R/W
Bit	15	14	13	12	11	10	9	8	7	6	5	4	3	2	1	0
Name	-	-	-	-	DC[0]											
Type					R/W	R/W	R/W	R/W	R/W	R/W	R/W	R/W	R/W	R/W	R/W	R/W

This register is used to store the DC value set 0 and 1 of current macroblock.

DC[0] DC Value for Luminance Block 0

DC[1] DC Value for Luminance Block 1

MP4+0348h Core MB Structure 2 Register

MP4_CORE_MB_STRUCT2

Bit	31	30	29	28	27	26	25	24	23	22	21	20	19	18	17	16
Name	-	-	-	-	DC[3]											
Type					R/W	R/W	R/W	R/W	R/W	R/W	R/W	R/W	R/W	R/W	R/W	R/W
Bit	15	14	13	12	11	10	9	8	7	6	5	4	3	2	1	0
Name	-	-	-	-	DC[2]											
Type					R/W	R/W	R/W	R/W	R/W	R/W	R/W	R/W	R/W	R/W	R/W	R/W

This register is used to store the DC value set 2 and 3 of current macroblock. For debug purpose or SW encode/decode procedure.

DC[2] DC Value for Luminance Block 2

DC[3] DC Value for Luminance Block 3

MP4+034Ch Core MB Structure 3 Register

MP4_CORE_MB_STRUCT3

Bit	31	30	29	28	27	26	25	24	23	22	21	20	19	18	17	16
Name	-	-	-	-	DC[5]											
Type					R/W	R/W	R/W	R/W	R/W	R/W	R/W	R/W	R/W	R/W	R/W	R/W
Bit	15	14	13	12	11	10	9	8	7	6	5	4	3	2	1	0
Name	-	-	-	-	DC[4]											
Type					R/W	R/W	R/W	R/W	R/W	R/W	R/W	R/W	R/W	R/W	R/W	R/W

This register is used to store the DC value set 4 and 5 of current macroblock. For debug purpose or SW encode/decode procedure.

DC[4] DC Value for Chrominance Block 4

DC[5] DC Value for Chrominance Block 5

MTK Confidential Release for Konka

MP4+0350h Core MB Structure 4 Register

MP4_CORE_MB_STRUCT4

Bit	31	30	29	28	27	26	25	24	23	22	21	20	19	18	17	16
Name	-	-	-	-	-	-	-	-	MVY[0]							
Type									R/W	R/W	R/W	R/W	R/W	R/W	R/W	R/W
Bit	15	14	13	12	11	10	9	8	7	6	5	4	3	2	1	0
Name	-	-	-	-	-	-	-	-	MVX[0]							
Type									R/W	R/W	R/W	R/W	R/W	R/W	R/W	R/W

This register is used to store the motion vector set 0 of current macroblock. For debug purpose or SW encode/decode procedure.

MVX[0] X Component of Motion Vector Set 0
MVY[0] Y Component of Motion Vector Set 0

MP4+0354h Core MB Structure 5 Register

MP4_CORE_MB_STRUCT5

Bit	31	30	29	28	27	26	25	24	23	22	21	20	19	18	17	16
Name	-	-	-	-	-	-	-	-	MVY[1]							
Type									R/W	R/W	R/W	R/W	R/W	R/W	R/W	R/W
Bit	15	14	13	12	11	10	9	8	7	6	5	4	3	2	1	0
Name	-	-	-	-	-	-	-	-	MVX[1]							
Type									R/W	R/W	R/W	R/W	R/W	R/W	R/W	R/W

This register is used to store the motion vector set 1 of current macroblock. For debug purpose or SW encode/decode procedure.

MVX[1] X Component of Motion Vector Set 1
MVY[1] Y Component of Motion Vector Set 1

MP4+0358h Core MB Structure 6 Register

MP4_CORE_MB_STRUCT6

Bit	31	30	29	28	27	26	25	24	23	22	21	20	19	18	17	16
Name	-	-	-	-	-	-	-	-	MVY[2]							
Type									R/W	R/W	R/W	R/W	R/W	R/W	R/W	R/W
Bit	15	14	13	12	11	10	9	8	7	6	5	4	3	2	1	0
Name	-	-	-	-	-	-	-	-	MVX[2]							
Type									R/W	R/W	R/W	R/W	R/W	R/W	R/W	R/W

This register is used to store the motion vector set 2 of current macroblock. For debug purpose or SW encode/decode procedure.

MVX[2] X Component of Motion Vector Set 2
MVY[2] Y Component of Motion Vector Set 2

MP4+035Ch Core MB Structure 7 Register

MP4_CORE_MB_STRUCT7

Bit	31	30	29	28	27	26	25	24	23	22	21	20	19	18	17	16
Name	-	-	-	-	-	-	-	-	MVY[3]							
Type									R/W	R/W	R/W	R/W	R/W	R/W	R/W	R/W
Bit	15	14	13	12	11	10	9	8	7	6	5	4	3	2	1	0

MTK Confidential Release for Korka

Name	-	-	-	-	-	-	-	-	MVX[3]							
Type									R/W	R/W	R/W	R/W	R/W	R/W	R/W	R/W

This register is used to store the motion vector set 3 of current macroblock. For debug purpose or SW encode/decode procedure.

MVX[3] X Component of Motion Vector Set 3
MVY[3] Y Component of Motion Vector Set 3

6.17.2.5 VLC DMA

MP4+0370h Core VLC DMA Status Register

MP4_CORE_VLC_DMA_STS

Bit	31	30	29	28	27	26	25	24	23	22	21	20	19	18	17	16
Name	GADDR_LSB															
Type	RO	RO	RO	RO	RO	RO	RO	RO	RO	RO	RO	RO	RO	RO	RO	RO
Bit	15	14	13	12	11	10	9	8	7	6	5	4	3	2	1	0
Name	-	-	GLCOMD	GDRDY	FULL	EMPTY	VLD	VLE	PACK	GREQ	STATE					
Type			RO	RO	RO	RO	RO	RO	RO	RO	RO	RO	RO	RO	RO	RO

This register provides software program the information of current status of VLD DMA.

STATE State of VLC DMA Engine.
GREQ request for data read/write.
- **0** No request.
- **1** Request for data read/write.

PACK VLE Buffer Maximum Size Meet.
VLE VLE Stream Ready
- **0** VLE is not ready
- **1** VLE is ready

VLD VLD Stream Ready
- **0** VLD is not ready
- **1** VLD is ready

EMPTY FIFO Empty
- **0** VLC DMA FIFO is not empty
- **1** VLC DMA FIFO is empty

FULL FIFO Full
- **0** VLC DMA FIFO is not full
- **1** VLC DMA FIFO is full

GDRDY Waiting for gdrdy, a signal from GMC, to return.
- **0** gdrdy has been received.
- **1** Waiting for gdrdy to return.

GLCOMD Waitinf for glcomd, a signal from GMC, to return.
- **0** glcomd has been received.
- **1** Waiting for glcomd to return.

GADDR_LSB Lower 16 bit value of gaddr, a signal to GMC.

MTK Confidential Release for Konka

MP4+0374h Core VLE Status Register

MP4_CORE_VLE_STS

Bit	31	30	29	28	27	26	25	24	23	22	21	20	19	18	17	16
Name																
Type	RO	RO	RO	RO	RO	RO	RO	RO	RO	RO	RO	RO	RO	RO	RO	RO
Bit	15	14	13	12	11	10	9	8	7	6	5	4	3	2	1	0
Name			GREQ	RELOAD_CNT									DONE	STATE		
Type	RO	RO	RO	RO	RO	RO	RO	RO	RO	RO	RO	RO	RO	RO	RO	RO

This register shows the status of MPEG4 VLE block and is used for hardware debugging.

STATE VLE State

DONE DC/AC coefficient reload done.

RELOAD_CNT DC/AC coefficient reload count.

GREQ VLE request to GMC.

MP4+0378h Core VLC DMA Base Address Register

MP4_CORE_VLC_BASE_ADDR

Bit	31	30	29	28	27	26	25	24	23	22	21	20	19	18	17	16
Name	BASE															
Type	WO	WO	WO	WO	WO	WO	WO	WO	WO	WO	WO	WO	WO	WO	WO	WO
Bit	15	14	13	12	11	10	9	8	7	6	5	4	3	2	1	0
Name	BASE														-	-
Type	WO	WO	WO	WO	WO	WO	WO	WO	WO	WO	WO	WO	WO	WO		

This register is used to describe the address of started Code Word for each VLC DMA buffer. Note that this base address should be 4-byte aligned.

BASE VLC DMA Base Address

MP4+037Ch Core VLC DMA Base Bit Count Register

MP4_CORE_VLC_BASE_BITCNT

Bit	31	30	29	28	27	26	25	24	23	22	21	20	19	18	17	16
Name	-	-	-	-	-	-	-	-	-	-	-	-	-	-	-	-
Type																
Bit	15	14	13	12	11	10	9	8	7	6	5	4	3	2	1	0
Name	-	-	-	-	-	-	-	-	-	-	-	BIT				
Type												WO	WO	WO	WO	WO

This register is used to describe the starting bit position of the 1st Code Word in the 1st VLC DMA buffer. For the following VLC DMA buffers, it is assumed that they are all 4-byte aligned and always start from bit position "0".

BIT Start of Bit at the 1st Code Word of 1st DMA Buffer

MP4+0380h Core VLC DMA Buffer Limit Register

MP4_CORE_VLC_LIMIT

Bit	31	30	29	28	27	26	25	24	23	22	21	20	19	18	17	16
Name	-	-	-	-	-	-	-	-	-	-	-	-	-	-	-	-
Type																
Reset	0	0	0	0	0	0	0	0	0	0	0	0	0	0	0	0

MTK Confidential Release for Korka

Bit	15	14	13	12	11	10	9	8	7	6	5	4	3	2	1	0
Name	LIMIT															
Type	R/W	R/W	R/W	R/W	R/W	R/W	R/W	R/W	R/W	R/W	R/W	R/W	R/W	R/W	R/W	R/W
Reset	1	1	1	1	1	1	1	1	1	1	1	1	1	1	1	1

This register is used to describe the buffer size of each VLC DMA buffer. Note that the value is counted in word (32-bit). Whenever the limit is reached and the corresponding interrupt control is enabled, an interrupt request will be generated.

LIMIT DMA Buffer Size, Count in Word (32-bit)

MP4+0384h Core VLC DMA Current Word Register

MP4_CORE_VLC_WORD

Bit	31	30	29	28	27	26	25	24	23	22	21	20	19	18	17	16
Name	ADDR															
Type	RO	RO	RO	RO	RO	RO	RO	RO	RO	RO	RO	RO	RO	RO	RO	RO
Bit	15	14	13	12	11	10	9	8	7	6	5	4	3	2	1	0
Name	ADDR														-	-
Type	RO	RO	RO	RO	RO	RO	RO	RO	RO	RO	RO	RO	RO	RO		

This register provides the address information of a certain code word that is under process of video CODEC. SW reads it back after encode of a frame is done.

ADDR VLC DMA current Address

MP4+0388h Core VLC DMA Current Bit Count Register

MP4_CORE_VLC_BITCNT

Bit	31	30	29	28	27	26	25	24	23	22	21	20	19	18	17	16
Name	-	-	-	-	-	-	-	-	-	-	-	-	-	-	-	-
Type																
Bit	15	14	13	12	11	10	9	8	7	6	5	4	3	2	1	0
Name	-	-	-	-	-	-	-	-	-	-	-	BITCNT				
Type												RO	RO	RO	RO	RO

This register provides the bit position information of a certain Code Word that is under process of video CODEC.

BITCNT Current Bit Count

MP4+038Ch Core VLC DMA Ring Buffer Ending Address Register

MP4_CORE_VLC_JUMP_FROM_ADDR

Bit	31	30	29	28	27	26	25	24	23	22	21	20	19	18	17	16
Name	JUMP_FROM_ADDR															
Type	R/W	R/W	R/W	R/W	R/W	R/W	R/W	R/W	R/W	R/W	R/W	R/W	R/W	R/W	R/W	R/W
Reset	1	1	1	1	1	1	1	1	1	1	1	1	1	1	1	1
Bit	15	14	13	12	11	10	9	8	7	6	5	4	3	2	1	0
Name	JUMP_FROM_ADDR															
Type	R/W	R/W	R/W	R/W	R/W	R/W	R/W	R/W	R/W	R/W	R/W	R/W	R/W	R/W	R/W	R/W
Reset	1	1	1	1	1	1	1	1	1	1	1	1	1	1	1	1

JUMP_FROM_ADDR The ending address of the current DMA buffer; when a jump takes place in VLC DMA address counter, the address will jump from the ending address of the current DMA buffer, which is JUMP_FROM_ADDR, to the starting address of the next DMA buffer, which is JUMP_TO_ADDR. To disable the

MTK Confidential Release for Konka

ring buffer feature, set this register to all ones; note that the address counter will not jump until done with the content in memory with address as JUMP_FROM_ADDR. So the memory content with address JUMP_FROM_ADDR will be executed by hardware.

MP4+0390h Core VLC DMA Ring Buffer Starting Address Register MP4_CORE_VLC_JUMP_TO_ADDR

Bit	31	30	29	28	27	26	25	24	23	22	21	20	19	18	17	16
Name	JUMP_TO_ADDR															
Type	R/W	R/W	R/W	R/W	R/W	R/W	R/W	R/W	R/W	R/W	R/W	R/W	R/W	R/W	R/W	R/W
Reset	1	1	1	1	1	1	1	1	1	1	1	1	1	1	1	1
Bit	15	14	13	12	11	10	9	8	7	6	5	4	3	2	1	0
Name	JUMP_TO_ADDR															
Type	R/W	R/W	R/W	R/W	R/W	R/W	R/W	R/W	R/W	R/W	R/W	R/W	R/W	R/W	R/W	R/W
Reset	1	1	1	1	1	1	1	1	1	1	1	1	1	1	1	1

JUMP_TO_ADDR The starting address of the next DMA buffer; when a jump takes place in VLC DMA address counter, the address will jump from the ending address of the current DMA buffer, which is JUMP_FROM_ADDR, to the starting address of the next DMA buffer, which is JUMP_TO_ADDR; note that the address counter will not jump until done with the content in memory with address as JUMP_FROM_ADDR. So the memory content with address JUMP_FROM_ADDR will be executed by hardware.

6.17.2.6 Software Decode Mode

MP4+0400h Software Decode Mode Command Register MP4_SVLD_COMD

Bit	31	30	29	28	27	26	25	24	23	22	21	20	19	18	17	16
Name	-	-	-	-	-	-	-	-	-	-	-	-	-	-	STOP	START
Type															WO	WO
Bit	15	14	13	12	11	10	9	8	7	6	5	4	3	2	1	0
Name	-	-	-	-	-	-	CODED	MCBPC	QUANT	DCT	AC	CBPY	MV	DMARK	MMARK	FLUSH
Type							WO	WO	WO	WO	WO	WO	WO	WO	WO	WO

For SW decode mode, the following control bits must be sent to HW for block-based decoding. The sequencer (or header parser) of HW does not decode the following information by itself.

FLUSH flush bits
MMARK Motion Marker
DMARK DC Marker
MV Motion Vector
CBPY cbpy
AC ac_pred_flag
DCT dct_coefficient
QUANT dquant
MCBPC mcbpc
CODED not_coded
START Block Decode Start

MTK Confidential Release for Konka

STOP Block Decode Stop

MP4+0404h Software Decode Mode Bit Count Register MP4_SVLD_BITCNT

Bit	31	30	29	28	27	26	25	24	23	22	21	20	19	18	17	16
Name	-	-	-	-	-	-	-	-	-	-	-	-	-	-	-	-
Type																
Bit	15	14	13	12	11	10	9	8	7	6	5	4	3	2	1	0
Name	-	-	-	-	-	-	-	-	-	-	-	BITCNT				
Type												R/W	R/W	R/W	R/W	R/W

BITCNT Number of Bits should be flushed

MP4+0408h Software Decode Mode Marker Indication Register MP4_SVLD_MARK

Bit	31	30	29	28	27	26	25	24	23	22	21	20	19	18	17	16
Name	-	-	-	-	-	-	-	-	-	-	-	-	-	-	-	-
Type																
Bit	15	14	13	12	11	10	9	8	7	6	5	4	3	2	1	0
Name	-	-	-	-	-	-	-	-	-	-	-	-	-	DC	MV	RESYN
Type														RO	RO	RO

RESYN Resync Marker
MV Motion Marker
DC DC Marker

MP4+040Ch Software Decode Mode VLD Code Word Register MP4_SVLD_CODE

Bit	31	30	29	28	27	26	25	24	23	22	21	20	19	18	17	16
Name	CODE															
Type	RO	RO	RO	RO	RO	RO	RO	RO	RO	RO	RO	RO	RO	RO	RO	RO
Bit	15	14	13	12	11	10	9	8	7	6	5	4	3	2	1	0
Name	CODE															
Type	RO	RO	RO	RO	RO	RO	RO	RO	RO	RO	RO	RO	RO	RO	RO	RO

CODE Current Code Word in VLD Stream, MSB Aligned

6.17.2.6.1 Debug

MP4+0500h Motion Estimation SAD for Y Component Register MP4_SAD_Y

Bit	31	30	29	28	27	26	25	24	23	22	21	20	19	18	17	16
Name	-	-	-	-	-	-	INTRA_MB_NUM									
Type							RO	RO	RO	RO	RO	RO	RO	RO	RO	RO
Bit	15	14	13	12	11	10	9	8	7	6	5	4	3	2	1	0
Name	SADY															
Type	RO	RO	RO	RO	RO	RO	RO	RO	RO	RO	RO	RO	RO	RO	RO	RO

MP4+0504h Motion Estimation SAD for U Component Register MP4_SAD_U

Bit	31	30	29	28	27	26	25	24	23	22	21	20	19	18	17	16
Name	-	-	-	-	-	-	-	-	-	-	-	-	-	-	-	-

MTK Confidential Release for Konka

Type																
Bit	15	14	13	12	11	10	9	8	7	6	5	4	3	2	1	0
Name	SADU															
Type	RO	RO	RO	RO	RO	RO	RO	RO	RO	RO	RO	RO	RO	RO	RO	RO

MP4+0508h Motion Estimation SAD for V Component Register MP4_SAD_V

Bit	31	30	29	28	27	26	25	24	23	22	21	20	19	18	17	16
Name	-	-	-	-	-	-	-	-	-	-	-	-	-	-	-	-
Type																
Bit	15	14	13	12	11	10	9	8	7	6	5	4	3	2	1	0
Name	SADV															
Type	RO	RO	RO	RO	RO	RO	RO	RO	RO	RO	RO	RO	RO	RO	RO	RO

INTRA_MB_NUM Total number of intra macro-block in a P frame. This register is valid after a P frame finishes encoding. Software can decide whether to re-encode current P frame as I frame by examining this register.

SADY SAD of luminance (Y) macroblock, for the purpose of debugging

SADU SAD of chrominance (U) macroblock, for the purpose of debugging

SADV SAD of chrominance (V) macroblock, for the purpose of debugging

6.17.2.6.2 Resync Marker

MP4+0600h MPEG4 Core Resync Marker Configuration 0 Register MP4_CORE_RESYNC_CONF0

Bit	31	30	29	28	27	26	25	24	23	22	21	20	19	18	17	16
Name	EN	MODE	PERIOD_BITS													
Type	R/W	R/W	R/W	R/W	R/W	R/W	R/W	R/W	R/W	R/W	R/W	R/W	R/W	R/W	R/W	R/W
Reset	0	0	1	1	1	1	1	1	1	1	1	1	1	1	1	1
Bit	15	14	13	12	11	10	9	8	7	6	5	4	3	2	1	0
Name	PERIOD_BITS															
Type	R/W	R/W	R/W	R/W	R/W	R/W	R/W	R/W	R/W	R/W	R/W	R/W	R/W	R/W	R/W	R/W
Reset	1	1	1	1	1	1	1	1	1	1	1	1	1	1	1	1

EN Resync marker insertion enable

- **0** Disable resync marker insertion
- **1** Enable resync marker insertion

MODE Resync Marker insertion mode selection

- **0** resync marker is inserted based on number of bits
- **1** resync marker is inserted based on number of macroblocks

PERIOD_BITS Period in number of bits to insert resync marker; only effective when MODE is set to 0; hardware will insert resync marker at the next macroblock boundary once the bit length of a video packet exceeds this value.

MP4+0604h MPEG4 Core Resync Marker Configuration 1 Register MP4_CORE_RESYNC_CONF1

Bit	31	30	29	28	27	26	25	24	23	22	21	20	19	18	17	16
Name	-	-	-	-	-	-	-	-	-	-	-	-	-	-	-	HEC
Type	R/W	R/W	R/W	R/W	R/W	R/W	R/W	R/W	R/W	R/W	R/W	R/W	R/W	R/W	R/W	R/W
Reset	0	0	0	0	0	0	0	0	0	0	0	0	0	0	0	0
Bit	15	14	13	12	11	10	9	8	7	6	5	4	3	2	1	0
Name	PERIOD_MB															

MTK Confidential Release for Konka

Type	R/W	R/W	R/W	R/W	R/W	R/W	R/W	R/W	R/W	R/W	R/W	R/W	R/W	R/W	R/W	R/W
Reset	1	1	1	1	1	1	1	1	1	1	1	1	1	1	1	1

HEC Header Extension Code; indicates the value of header_extension_code in MPEG4 standard (ISO/IEC 14496-2)

0 header_extension_code is 0.

1 header_extension_code is 1.

PERIOD_MB Period in number of macroblocks (MB) to insert resync marker; only effective when MODE is set to 1; hardware will insert resync marker at the next macroblock boundary once the number of macroblock in current video packet exceeds this value.

MP4+060Ch MPEG4 Core Local Time Base Register

MP4_CORE_TIME_BASE

Bit	31	30	29	28	27	26	25	24	23	22	21	20	19	18	17	16
Name	-	-	-	-	-	-	-	MODULO_TIME_BASE					BW			
Type	R/W	R/W	R/W	R/W	R/W	R/W	R/W	R/W	R/W	R/W	R/W	R/W	R/W	R/W	R/W	R/W
Reset	0	0	0	0	0	0	0	0	0	0	0	0	0	0	0	0
Bit	15	14	13	12	11	10	9	8	7	6	5	4	3	2	1	0
Name	VOP_TIME_INCREMENT															
Type	R/W	R/W	R/W	R/W	R/W	R/W	R/W	R/W	R/W	R/W	R/W	R/W	R/W	R/W	R/W	R/W
Reset	0	0	0	0	0	0	0	0	0	0	0	0	0	0	0	0

MODULO_TIME_BASE Represent the value of modulo_time_base; value ranges from 0 to 31.

BW Bit width of vop_time_increment. The real bit-width of vop_time_increment is (BW + 1), ranging from 1 to 16.

VOP_TIME_INCREMENT Carries the value of vop_time_increment defined in MPEG4 standard (ISO/IEC 14496-2); the meaningful bit width of vop_time_increment is signaled by BW field.

6.18 TV Controller

6.18.1 General Description

MT6228 supports NTSC/PAL interlaced TV format. The display function includes two components: a TV controller and a TV encoder. The main functions of the TV controller are as follows:

1. Fetch the TV frame buffer.
   - In video playback mode, the source is from the video codec buffer in YUV420 format. In this mode, the TV controller and MPEG4 decoder can also communicate to achieve the best performance.
   - In image playback mode, the source is in RGB565 format. In this mode, still images can be displayed. The LCM controller can direct the image path to the TV controller. When the LCM controller sends frames to the frame buffer as it does for the LCD display, the TV controller retrieves the frames for display.
2. Scale the frame size to fit the TV size. MT6228 adopts bilinear interpolation in both horizontal and vertical dimension to scale up the frame. The user can adjust both the location and the size to achieve a suitable appearance.

In NTSC mode, the ideal display area is 720(W) x 480(H), but the actual display area depends on the TV set. Some boundary area may be invisible.In PAL mode, the ideal display area is 720(W) x 576(H); the actual display area also depends on the TV set.

MTK Confidential Release for Konka

TV frame updates consume a lot of bandwidth. For interlaced system, one frame contains 2 fields. In NTSC mode, the field update rate is 59.94 frames per second (fps); the field update rate in PAL mode is 50 fps. Performance is bound by the size of the source image. The larger the image size, the higher the bandwidth required to support the TV display.

The controller supports an arbitrary image size up to 640 pixels in height and 480 pixels in width.

Figure 36 depicts the block diagram of the TV controller.

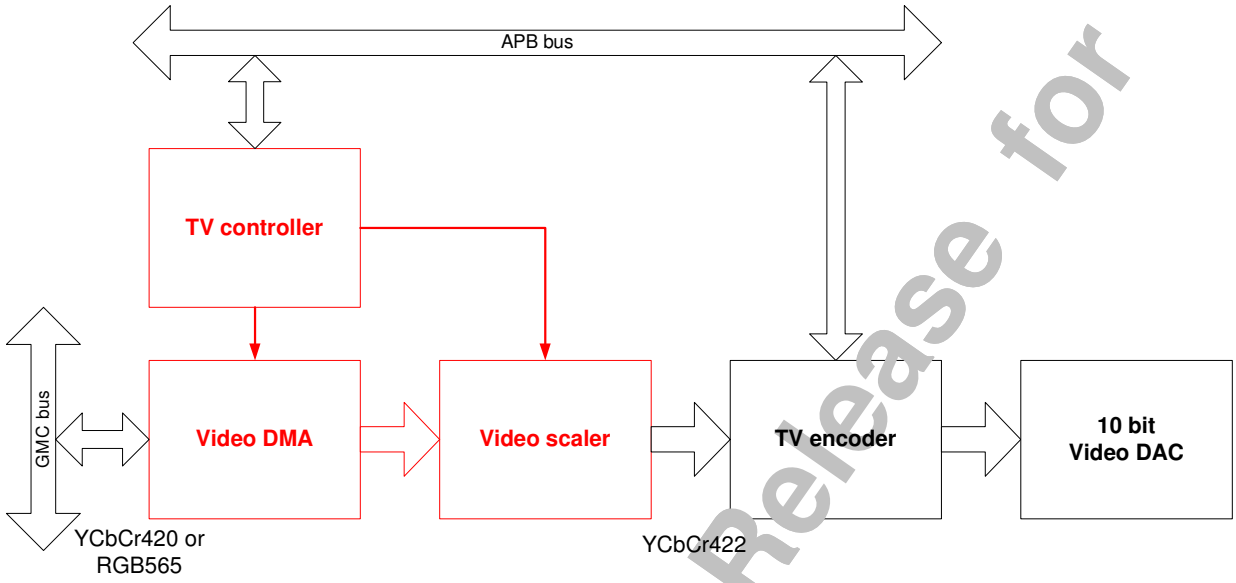

Figure 36 Block Diagram of the TV Encoder

6.18.2 Register Definitions

TVC+0000h TVC enable register TVC_ENA

Bit	15	14	13	12	11	10	9	8	7	6	5	4	3	2	1	0
Name															TSEN	TVEN
Type															R/W	R/W
Reset															0	0

The register is double buffer. At the start of each frame, the enable bit is latched into the active buffer and takes effect.

TSEN TV control test signal enable.

- **0** Disable the test signal display.
- **1** Enable the test signal display.

TVEN TV controller enable.

- **0** Disable the TV frame update and display.
- **1** Enable the TV frame update and display.

TVC+0004h TVC reset control register TVC_RST

Bit	15	14	13	12	11	10	9	8	7	6	5	4	3	2	1	0
Name																RST
Type																WO
Reset																0

MTK Confidential Release for Konka

The register is used to reset both the TV controller and the TV encoder. This control bit is write-only.

RST Reset control bit.

TVC+0008h TVC control register TVC_CON

Bit	31	30	29	28	27	26	25	24	23	22	21	20	19	18	17	16
Name																
Type																
Reset																
Bit	15	14	13	12	11	10	9	8	7	6	5	4	3	2	1	0
Name							AB_WR	AB_RD			BURST	DPBUF	BLKOUT	NOIP		YUV_M
Type							R/W	R/W			R/W	R/W	R/W	R/W		R/W
Reset							0	0			0	0	0	0		0

This register contains double buffer control, burst-mode control, buffer configuration, vertical interpolation control, and color-space control.

AB_WR Double buffer access control. Only five active buffers can be directly programmed through setting AB_WR: TVC_YADR_SRC, TVC_SRCWIDTH, TVC_TARWIDTH, TVC_HCOEFX, TVC_HCOEFY.

- **0** Write write-buffer.
- **1** Write both write-buffer and active-buffer.

AB_RD Double buffer access control.

- **0** Read write-buffer.
- **1** Read active-buffer.

BURST Enable memory burst mode access. TVC supports 4-beat burst mode access to memory. Double buffer.

- **0** Disable burst mode access.
- **1** Enable burst mode access.

DPBUF Enable deeper buffer for better performance. Double buffer.

- **0** Disable deeper buffer.
- **1** Enable deeper buffer.

BLACKOUT Fill the unfilled line buffer area with black pixels. Double buffer.

- **0** Do not fill with black pixels.
- **1** Fill with black pixels.

NOIP Bypass vertical interpolation. Enabling this bit reduces the average data access bandwidth by 2. Double buffer.

- **0** Enable vertical interpolation.
- **1** Bypass vertical interpolation.

YUV_M Enable YUV mode. Double buffer.

- **0** RGB565 mode. For LCD dump buffer.
- **1** YUV420 mode. For MPEG buffer.

TVC+000Ch TVC Y data source address TVC_YADR_SRC

Bit	31	30	29	28	27	26	25	24	23	22	21	20	19	18	17	16
Name	SRC_Y [31:16]															
Type	R/W															
Reset	0															
Bit	15	14	13	12	11	10	9	8	7	6	5	4	3	2	1	0
Name	SRC_Y [15:0]															
Type	R/W															

MTK Confidential Release for Konka

Reset	0

This register is a double buffer. At the start of each frame, the enable bit is latched into the active buffer and takes effect. In YUV mode, the register represents the Y source address. In RGB mode, the register represents the RGB source address.

TVC+0010h TVC U data source address TVC_UADR_SRC

Bit	31	30	29	28	27	26	25	24	23	22	21	20	19	18	17	16
Name	SRC_U [31:16]															
Type	R/W															
Reset	0															
Bit	15	14	13	12	11	10	9	8	7	6	5	4	3	2	1	0
Name	SRC_U [15:0]															
Type	R/W															
Reset	0															

This register is double buffer. At the start of each frame, the enable bit is latched into the active buffer and takes effect. In YUV mode, the register represents the U source address. In RGB mode, this register has no function.

TVC+0014h TVC V data source address TVC_VADR_SRC

Bit	31	30	29	28	27	26	25	24	23	22	21	20	19	18	17	16
Name	SRC_V [31:16]															
Type	R/W															
Reset	0															
Bit	15	14	13	12	11	10	9	8	7	6	5	4	3	2	1	0
Name	SRC_V [15:0]															
Type	R/W															
Reset	0															

This register is double buffer. At the start of each frame, the enable bit is latched into the active buffer and takes effect. In YUV mode, the register represents the V source address. In RGB mode, this register has no function.

TVC+0018h TVC horizontal scaling coefficient X TVC_HCOEFX

Bit	15	14	13	12	11	10	9	8	7	6	5	4	3	2	1	0
Name						COEFX										
Type						R/W										
Reset						0										

This register is double buffer. At the start of each frame, the enable bit is latched into the active buffer and takes effect. The scaling coefficients should follow the formula:

$$\frac{Ws\,(source\ width)-1}{Wt\,(target\ width)-1}=\frac{X+\frac{Y}{Wt-1}}{256},$$

where X, Y are positive integers, and $0 < Y < W_t - 1$.

For example, if the user needs to scale the image width from 640 pixels to 720 pixels, the formula is:

$$\frac{639}{719}=\frac{227+\frac{371}{719}}{256},$$

giving values X=227 and Y=371.

MTK Confidential Release for Konka

TVC+001Ch TVC horizontal scaling coefficient Y TVC_HCOEFY

Bit	15	14	13	12	11	10	9	8	7	6	5	4	3	2	1	0
Name							COEFY									
Type							R/W									
Reset							0									

This register is double buffer. At the start of each frame, the enable bit is latched into the active buffer and takes effect.

TVC+0020h TVC vertical scaling coefficient X TVC_VCOEFX

Bit	15	14	13	12	11	10	9	8	7	6	5	4	3	2	1	0
Name							COEFX									
Type							R/W									
Reset							0									

This register is double buffer. At the start of each frame, the enable bit is latched into the active buffer and takes effect. The scaling coefficients should follow the formula:

$$\frac{Hs\,(source\ height)-1}{Ht\,(target\ height)-1}=\frac{X+\frac{Y}{Ht-1}}{256},\ X,Y\in positive\ \ integer$$

TVC+0024h TVC vertical scaling coefficient Y TVC_VCOEFY

Bit	15	14	13	12	11	10	9	8	7	6	5	4	3	2	1	0
Name							COEFY									
Type							R/W									
Reset							0									

This register is double buffer. At the start of each frame, the enable bit is latched into the active buffer and takes effect.

TVC+0028h TVC frame source width control register TVC_SRCWIDTH

Bit	15	14	13	12	11	10	9	8	7	6	5	4	3	2	1	0
Name							SRCWIDTH									
Type							R/W									
Reset							0									

This register is double buffer. At the start of each frame, the enable bit is latched into the active buffer and takes effect. In YUV mode, the source width is a multiple of 16; in RGB mode, the source width is a multiple of 2.

TVC+002C TVC frame source height control register TVC_SRCHEIGHT

Bit	15	14	13	12	11	10	9	8	7	6	5	4	3	2	1	0
Name							SRCHEIGHT									
Type							R/W									
Reset							0									

This register is double buffer. At the start of each frame, the enable bit is latched into the active buffer and takes effect.

TVC+0030 TVC frame target width control register TVC_TARWIDTH

Bit	15	14	13	12	11	10	9	8	7	6	5	4	3	2	1	0
Name							TARWIDTH									
Type							R/W									
Reset							0									

MTK Confidential Release for Konka

This register is double buffer. At the start of each frame, the enable bit is latched into the active buffer and takes effect.

TVC+0034 TVC frame target height control register TVC_TARHEIGHT

Bit	15	14	13	12	11	10	9	8	7	6	5	4	3	2	1	0
Name							TARHEIGHT									
Type							R/W									
Reset							0									

This register is double buffer. At the start of each frame, the enable bit is latched into the active buffer and takes effect.

TVC+0038h TVC start point control register TVC_START_POINT

Bit	31	30	29	28	27	26	25	24	23	22	21	20	19	18	17	16
Name							START_PXL									
Type							R/W									
Reset							0									
Bit	15	14	13	12	11	10	9	8	7	6	5	4	3	2	1	0
Name							START_LINE									
Type							R/W									
Reset							0									

This register is double buffer. At the start of each frame, the enable bit is latched into the active buffer and takes effect. This register is used to control the position of frame displayed on TV. Setting START_PXL to 0 and START_LINE to 21(NTSC) or 22(PAL) aligns the frame to the top-left corner of display.

START_PXL Starting pixel position in a line.

START_LINE Starting line of display.

TVC+003Ch TVC register update control register TVC_REG_RDY

Bit	15	14	13	12	11	10	9	8	7	6	5	4	3	2	1	0
Name																REG_RDY
Type																R/W
Reset																0

This register indicates that the double buffer register data is ready to be latched into active buffer.
At the start of each frame, the hardware monitors the bit. If the bit is set to 1 by the software, the double buffer register is latched into active buffer synchronously, and the REG_RDY bit is automatically cleared.

REG_RDY Double buffer control bit.

TVC+0040h Test signal region start line number control register 1 TVC_PTRN1

Bit	31	30	29	28	27	26	25	24	23	22	21	20	19	18	17	16
Name							SLINE1									
Type							R/W									
Reset							0									
Bit	15	14	13	12	11	10	9	8	7	6	5	4	3	2	1	0
Name							SLINE0									
Type							RO									
Reset							0									

MTK Confidential Release for Konka

The register specifies the starting line of the 1st and 2nd regions of the test signal to display. While the running line number falls in the 1st region, the TV iteratively displays the 1st line buffer. While it falls in the 2nd region, the TV iteratively displays the 2nd line buffer. The data in the line buffers is pre-filled by the user. The line length is 720 pixels.

SLINE1 The starting line of the 2nd region.
SLINE0 The starting line of the 1st region.

TVC+0044h Test signal region start line number control register 2 TVC_PTRN2

Bit	31	30	29	28	27	26	25	24	23	22	21	20	19	18	17	16
Name							SLINE3									
Type							R/W									
Reset							0									
Bit	15	14	13	12	11	10	9	8	7	6	5	4	3	2	1	0
Name							SLINE2									
Type							R/W									
Reset							0									

The register specifies the starting line of the 3rd and 4th regions of the test signal to display. While the running line number falls in the 3rd region, the TV iteratively displays the 3rd line buffer. While it falls in the 4th region, the TV iteratively displays the 4th line buffer. The data in the line buffers is pre-filled by the user. The line length is 720 pixels.

SLINE3 The starting line of the 4th region.
SLINE2 The starting line of the 3rd region.

TVC+0048h Line buffer load control register TVC_LINELOAD

Bit	15	14	13	12	11	10	9	8	7	6	5	4	3	2	1	0
Name								BUSY					LL3	LL2	LL1	LL0
Type								RO					WO	WO	WO	WO
Reset								0					0	0	0	0

The register controls the data loading of the line buffer. Turn off TVEN and TSEN when performing the line loading operation. The BUSY flag is asserted until the line loading operation is completed.

BUSY Line loading busy.
LL3 Writing one starts loading line buffer 3.
LL2 Writing one starts loading line buffer 2.
LL1 Writing one starts loading line buffer 1.

6.18.2.1 LL0 Writing one starts loading line buffer 0.

6.19 TV encoder

6.19.1 General Description

TV encoder receives a YCbCr stream from the video scaler and encodes the stream into NTSC/PAL signal.

shows the block diagram of the TV encoder.

MTK Confidential Release for Konka

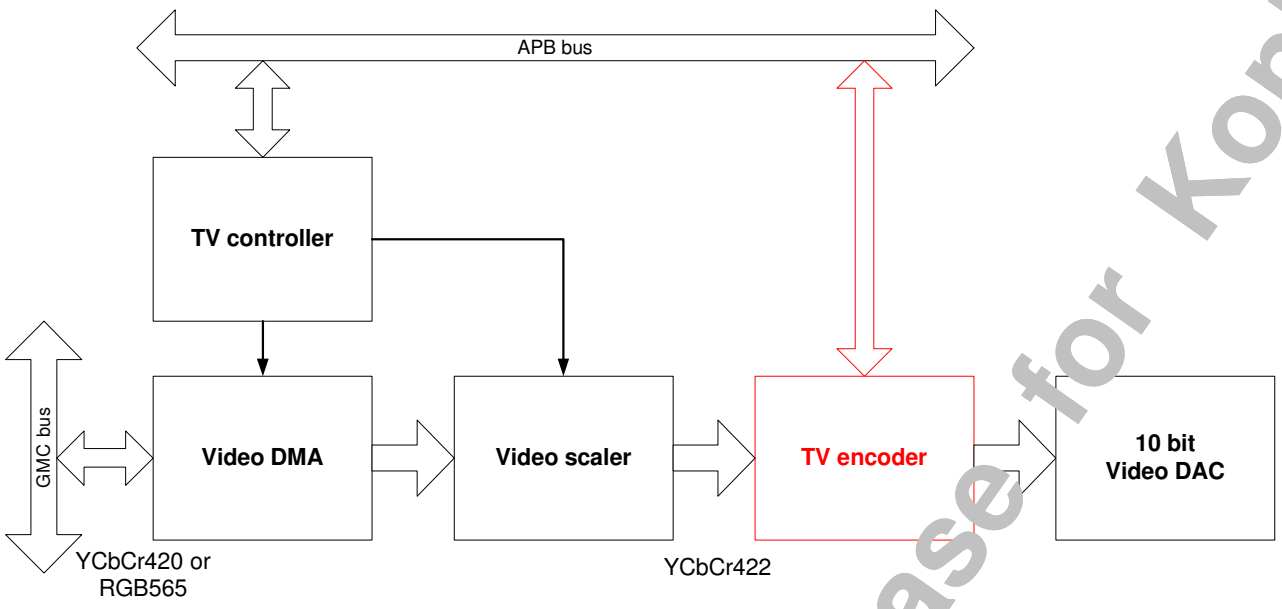

Figure 37 Block Diagram of TV Encoder

6.19.2 Register Definitions

TVE+0000h Encoder mode control TVE_MODE

Bit	31	30	29	28	27	26	25	24	23	22	21	20	19	18	17	16
Name															TVTYPE	
Type	R/W	R/W	R/W	R/W	R/W	R/W	R/W	R/W	R/W	R/W	R/W	R/W	R/W	R/W	R/W	
Reset	0	0	0	0	0	0	0	0	0	0	0	0	0	0	0	
Bit	15	14	13	12	11	10	9	8	7	6	5	4	3	2	1	0
Name	UVSWP	BLKER	SLOFF			SYDEL	YDEL		CUPOF	YLPON	CLPON	CLPSEL		SETUP	CBON	ENCON
Type	R/W	R/W	R/W			R/W	R/W		R/W	R/W	R/W	R/W		R/W	R/W	R/W
Reset	0	0	0			0	0		0	0	0	0		0	0	0

TVTYPE TV type.

- **00** NTSC (525 lines, no phase alternation line)
- **01** PAL-M (525 lines, with phase alternation line)
- **10** PAL-C (625 lines, with phase alternation line)
- **11** PAL (625 lines, with phase alternation line)

UVSWP U/V swap.

BLKER Blacker than black mode on.

SLOFF Slew at the beginning and at the end of the horizontal active area off.

SYDEL Delay of Y (half sample resolution).

YDEL Delay of Y (one sample resolution). (Recommended setting is 2.)

CUPOF Chrominance (chroma) of component up-sample off.

YLPON Luminance (luma) low-pass filter on. (Recommended setting is 1.)

CLPON Chroma low-pass filter on. (Recommended setting is 1.)

CLPSEL Chroma low-pass filter coefficient selection.

SETUP 7.5IRE setup enable. (M) NTSC and (M, N) PAL have a blanking pedestal.

MTK Confidential Release for Konka

CBON Enable the color bar.

ENCON Enable the TV encoder.

TVE+0004h Scale control TVE_CSCALE

Bit	31	30	29	28	27	26	25	24	23	22	21	20	19	18	17	16
Name													BLANK			
Type													R/W			
Reset													0x4			
Bit	15	14	13	12	11	10	9	8	7	6	5	4	3	2	1	0
Name	VSCALE								USCALE							
Type	R/W								R/W							
Reset	0x5A (90)								0x5A (90)							

USCALE Scale of U (USCALE/128).

VSCALE Scale of V (VSCALE/128).

BLANK Luma data at this level (BLANKx4) is presented as blank.

TVE+0008h DAC control TVE_DACTRL

Bit	31	30	29	28	27	26	25	24	23	22	21	20	19	18	17	16
Name												TRIMSET	TRIM			
Type	R/W	R/W	R/W	R/W	R/W	R/W	R/W	R/W	R/W	R/W	R/W	R/W	R/W			
Reset	0	0	0	0	0	0	0	0	0	0	0	0	0			
Bit	15	14	13	12	11	10	9	8	7	6	5	4	3	2	1	0
Name					TEST_COMP_EN	VPLUGREF		PLUG_DET_EN			PDN_HAIBIAS	PDN_DAC2	PDN_DAC1	PDN_DAC0	PDN_BGREF	DAC_EN
Type	R/W	R/W	R/W	R/W	R/W	R/W		R/W	R/W	R/W	R/W	R/W	R/W	R/W	R/W	R/W
Reset	0	0	0	0	0	0		0	0	0	0	0	0	0	0	1

TRIMSET Enable software trimming code setting.

- **0** Disable.
- **1** Enable.

TRIM Trimming code for BGVref.

TEST_COMP_EN Comparator test enable.

- **0** Disable.
- **1** Enable.

VPLUGREF Plug-in detect threshold selection.

PLUG_DET_EN Plug-in detect enable.

- **0** Disable.
- **1** Enable.

PDN_HAIBIAS Half bias current power down mode.

- **0** Power up.
- **1** Power down.

PDN_DAC2 DAC power down control.

- **0** Power up.
- **1** Power down.

PDN_DAC1 3/4 DAC power down control.

- **0** Power up.

MTK Confidential Release for Konka

1 Power down.

PDN_DAC0 1/2 DAC power down control.

0 Power up.

1 Power down.

PDN_BGREF BGVref power down control.

0 Power up.

1 Power down.

DAC_EN DAC enable.

TVE+000Ch Burst level control TVE_BURST

Bit	31	30	29	28	27	26	25	24	23	22	21	20	19	18	17	16
Name									UPQINI							
Type									R/W							
Reset									0							
Bit	15	14	13	12	11	10	9	8	7	6	5	4	3	2	1	0
Name									BRSTLVL							
Type									R/W							
Reset									0x3A (58)							

UPQINI Phase offset of the color burst.

BRSTLVL Color burst level.

TVE+0010h Color frequency control TVE_FREQ

Bit	31	30	29	28	27	26	25	24	23	22	21	20	19	18	17	16
Name				BFP2												
Type				R/W												
Reset				0xdd0 (3536)												
Bit	15	14	13	12	11	10	9	8	7	6	5	4	3	2	1	0
Name								BFP1								
Type								R/W								
Reset								0x10f (271)								

Burst frequency control.

$$Burst\ frequency = 27\text{MHz} \times \frac{BFP1 + \frac{BFP2 + \frac{X}{625}}{4H}}{2048},$$

where H is the pixel clock cycle number per line.

Use the following table to get BFP1 and BFP2 (in decimal).

TV type	H	X	BFP1	BFP2
NTSC	1716	0	271	3536
PAL	1728	67	336	2061

BFP2 Color burst frequency synthesis value 2.

BFP1 Color burst frequency synthesis value 1.

TVE+0014h Slew control TVE_SLEW

Bit	31	30	29	28	27	26	25	24	23	22	21	20	19	18	17	16

MTK Confidential Release for Konka

Name								SLEWUP								
Type								R/W								
Reset								0xc8 (200)								
Bit	15	14	13	12	11	10	9	8	7	6	5	4	3	2	1	0
Name						SLEWDN										
Type						R/W										
Reset						0x6A4 (1700)										

SLEWUP Begin cycle of valid pixel with slew rate control.

SLEWDN End cycle of valid pixel with slew rate control.

TVE+0028h Luma low-pass filter coefficients 10-11 TVE_YLPFC

Bit	31	30	29	28	27	26	25	24	23	22	21	20	19	18	17	16
Name			YLPF11								YLPF10					
Type			R/W								R/W					
Reset			0x32 (-14)								0x2 (2)					
Bit	15	14	13	12	11	10	9	8	7	6	5	4	3	2	1	0
Name																
Type																
Reset																

YLPF11 Luma low-pass filter coefficient 11. Signed integer.

YLPF10 Luma low-pass filter coefficient 10. Signed integer.

TVE+002Ch Luma low-pass filter coefficients 12-15 TVE_YLPFD

Bit	31	30	29	28	27	26	25	24	23	22	21	20	19	18	17	16
Name		YLPF15								YLPF14						
Type		R/W								R/W						
Reset		0x2 (2)								0x1e (30)						
Bit	15	14	13	12	11	10	9	8	7	6	5	4	3	2	1	0
Name			YLPF13								YLPF12					
Type			R/W								R/W					
Reset			0X3d (-3)								0X25 (-27)					

YLPF15 Luma low-pass filter coefficient 15. Signed integer.

YLPF14 Luma low-pass filter coefficient 14. Signed integer.

YLPF13 Luma low-pass filter coefficient 13. Signed integer.

YLPF12 Luma low-pass filter coefficient 12. Signed integer.

TVE+0030h Luma low-pass filter coefficients 16-19 TVE_YLPFE

Bit	31	30	29	28	27	26	25	24	23	22	21	20	19	18	17	16
Name	YLPF19								YLPF18							
Type	R/W								R/W							
Reset	0x90 (144)								0xb4 (180)							
Bit	15	14	13	12	11	10	9	8	7	6	5	4	3	2	1	0
Name	YLPF17								YLPF16							
Type	R/W								R/W							
Reset	0Xff (-1)								0Xc7 (-57)							

YLPF19 Luma low-pass filter coefficient 19. Must be unsigned. Hardware extends to 9 bits.

YLPF18 Luma low-pass filter coefficient 18. Must be unsigned. Hardware extends to 9 bits.

YLPF17 Luma low-pass filter coefficient 17. Signed integer.

YLPF16 Luma low-pass filter coefficient 16. Signed integer.

MTK Confidential Release for Konka

TVE+0034h Chrominance low-pass filter coefficients 0-3 TVE_CLPFA

Bit	31	30	29	28	27	26	25	24	23	22	21	20	19	18	17	16
Name			CLPF3								CLPF2					
Type			R/W								R/W					
Reset			0x18								0xd					
Bit	15	14	13	12	11	10	9	8	7	6	5	4	3	2	1	0
Name			CLPF1								CLPF0					
Type			R/W								R/W					
Reset			0x10								0x1					

CLPF3 Chrominance low-pass filter coefficient 3.
CLPF2 Chrominance low-pass filter coefficient 2.
CLPF1 Chrominance low-pass filter coefficient 1.
CLPF0 Chrominance low-pass filter coefficient 0.

TVE+0038h Chrominance low-pass filter coefficients 4-7 TVE_CLPFB

Bit	31	30	29	28	27	26	25	24	23	22	21	20	19	18	17	16
Name			CLPF7								CLPF6					
Type			R/W								R/W					
Reset			0x25								0x34					
Bit	15	14	13	12	11	10	9	8	7	6	5	4	3	2	1	0
Name			CLPF5								CLPF4					
Type			R/W								R/W					
Reset			0x20								0x21					

CLPF7 Chrominance low-pass filter coefficient 7.
CLPF6 Chrominance low-pass filter coefficient 6.
CLPF5 Chrominance low-pass filter coefficient 5.
CLPF4 Chrominance low-pass filter coefficient 4.

TVE+003Ch Chrominance low-pass filter coefficients 8-9 TVE_CLPFC

Bit	31	30	29	28	27	26	25	24	23	22	21	20	19	18	17	16
Name																
Type																
Reset																
Bit	15	14	13	12	11	10	9	8	7	6	5	4	3	2	1	0
Name			CLPF9								CLPF8					
Type			R/W								R/W					
Reset			0x27								0x3c					

CLPF9 Chrominance low-pass filter coefficient 9.
CLPF8 Chrominance low-pass filter coefficient 8.

TVE+0040h Gamma correction coefficient 0 TVE_GAMMAA

Bit	31	30	29	28	27	26	25	24	23	22	21	20	19	18	17	16
Name					GAMMA0											
Type					R/W											
Reset					0											
Bit	15	14	13	12	11	10	9	8	7	6	5	4	3	2	1	0
Name																
Type																
Reset																

MTK Confidential Release for Konka

GAMMA0~GAMMA8 indicate the turning points of a piecewise linear approximation for a gamma curve. By default, the values form a perfect linear equation with no gamma correction.

Gamma correction is performed on Luma only.

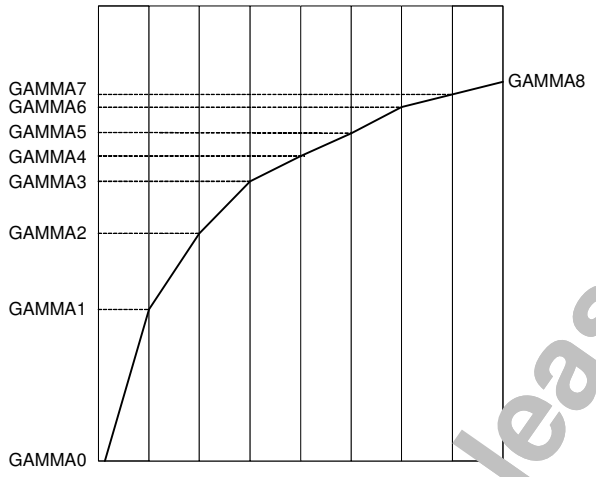

GAMMA0 Gamma correction coefficient 0.

TVE+0044h Gamma correction coefficients 1-2 TVE_GAMMAB

Bit	31	30	29	28	27	26	25	24	23	22	21	20	19	18	17	16
Name					GAMMA2											
Type					R/W											
Reset					0x314											
Bit	15	14	13	12	11	10	9	8	7	6	5	4	3	2	1	0
Name					GAMMA1											
Type					R/W											
Reset					0x18a											

GAMMA2 Gamma correction coefficient 2.

GAMMA1 Gamma correction coefficient 1.

TVE+0048h Gamma correction coefficients 3-4 TVE_GAMMAC

Bit	31	30	29	28	27	26	25	24	23	22	21	20	19	18	17	16
Name					GAMMA4											
Type					R/W											
Reset					0x629											
Bit	15	14	13	12	11	10	9	8	7	6	5	4	3	2	1	0
Name					GAMMA3											
Type					R/W											
Reset					0x49e											

GAMMA4 Gamma correction coefficient 4.

GAMMA3 Gamma correction coefficient 3.

TVE+004Ch Gamma correction coefficients 5-6 TVE_GAMMAD

Bit	31	30	29	28	27	26	25	24	23	22	21	20	19	18	17	16

MTK Confidential Release for Konka

Name					GAMMA6											
Type					R/W											
Reset					0x93d											
Bit	15	14	13	12	11	10	9	8	7	6	5	4	3	2	1	0
Name					GAMMA5											
Type					R/W											
Reset					0x7b3											

GAMMA6 Gamma correction coefficient 6.

GAMMA5 Gamma correction coefficient 5.

TVE+0050h Gamma correction coefficients 7-8 TVE_GAMMAE

Bit	31	30	29	28	27	26	25	24	23	22	21	20	19	18	17	16
Name					GAMMA8											
Type					R/W											
Reset					0xc52											
Bit	15	14	13	12	11	10	9	8	7	6	5	4	3	2	1	0
Name					GAMMA7											
Type					R/W											
Reset					0xac8											

GAMMA8 Gamma correction coefficient 8.

GAMMA7 Gamma correction coefficient 7.

TVE+0060h Software reset control TVE_SWRST

Bit	31	30	29	28	27	26	25	24	23	22	21	20	19	18	17	16
Name																
Type																
Reset																
Bit	15	14	13	12	11	10	9	8	7	6	5	4	3	2	1	0
Name																SWRST
Type																WO
Reset																0

Writing a 1 invokes a software reset.

TVE+0070h Plug-in detection TVE_PLUG

Bit	15	14	13	12	11	10	9	8	7	6	5	4	3	2	1	0
Name																PLUG
Type																RO

The TV encoder can detect cable plug-in by sensing the output impedance. To enable plug-in detection, set the TVE_DACTRL register PLUG_DETECT_EN bit. If PLUG_DETECT_EN is enabled, when the cable is plugged in, the PLUG bit is set to 1. The user can use polling or interrupt schemes (refer to TVE_INTREN and TVE_INTR) for plug-in detection.

PLUG Plug-in detection.

- **0** Cable not plugged in.
- **1** Cable plugged in.

MTK Confidential Release for Konka

7 Audio Front-End

7.1 General Description

The audio front-end essentially consists of voice and audio data paths. **Figure 38** shows the block diagram of the audio front-end. All voice band data paths comply with the GSM 03.50 specification. Mono hands-free audio or external FM radio playback paths are also provided. The audio stereo path facilitates CD-quality playback, external FM radio, and voice playback through a headset.

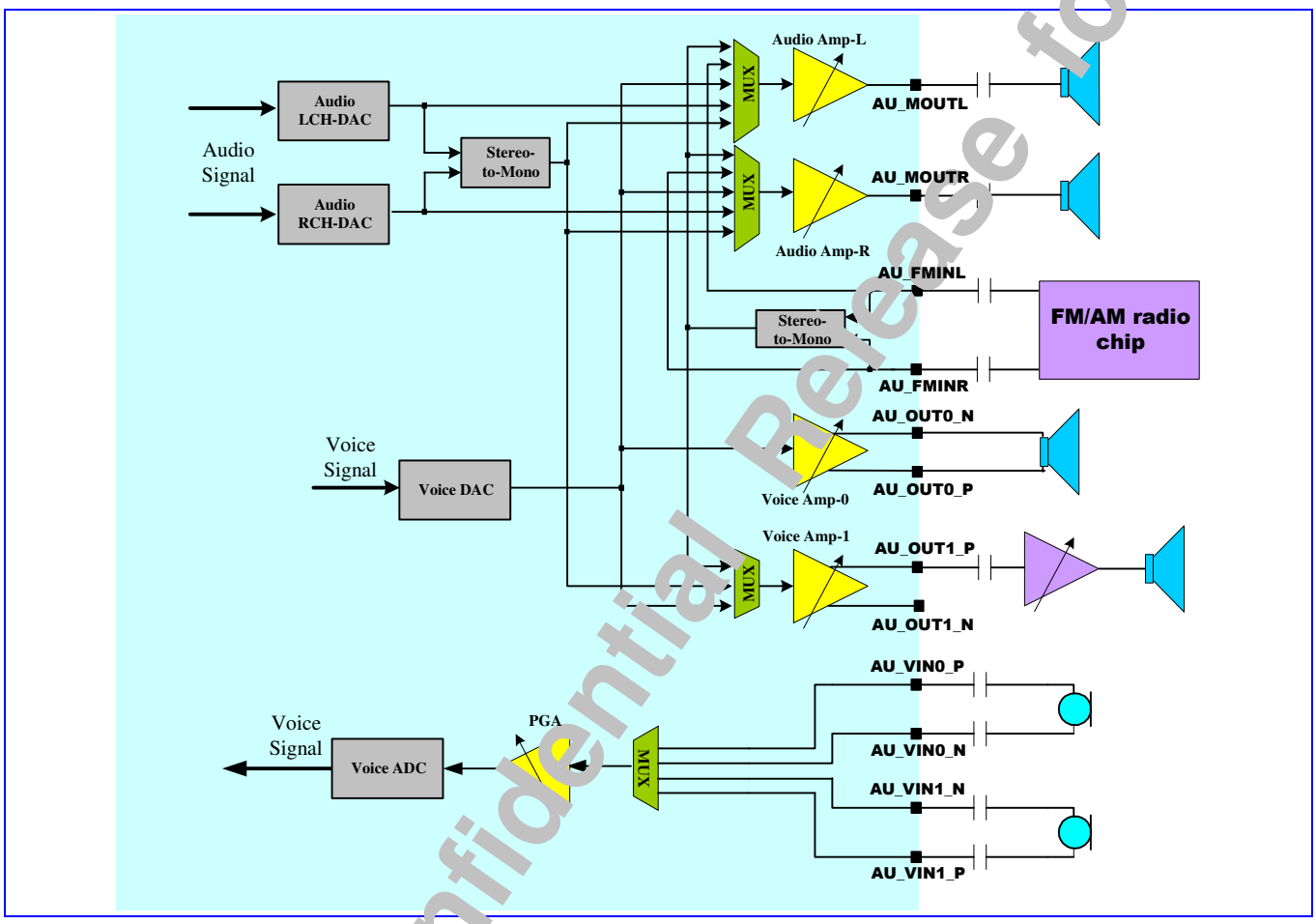

Figure 38 Block diagram of audio front-end

Figure 39 shows the digital circuits block diagram of the audio front-end. The APB register block is an APB peripheral that stores settings from the MCU. The DSP audio port block interfaces with the DSP for control and data communications. The digital filter block performs filter operations for voice band and audio band signal processing. The Digital Audio Interface (DAI) block communicates with the System Simulator for FTA or external Bluetooth modules.

MTK Confidential Release for Konka

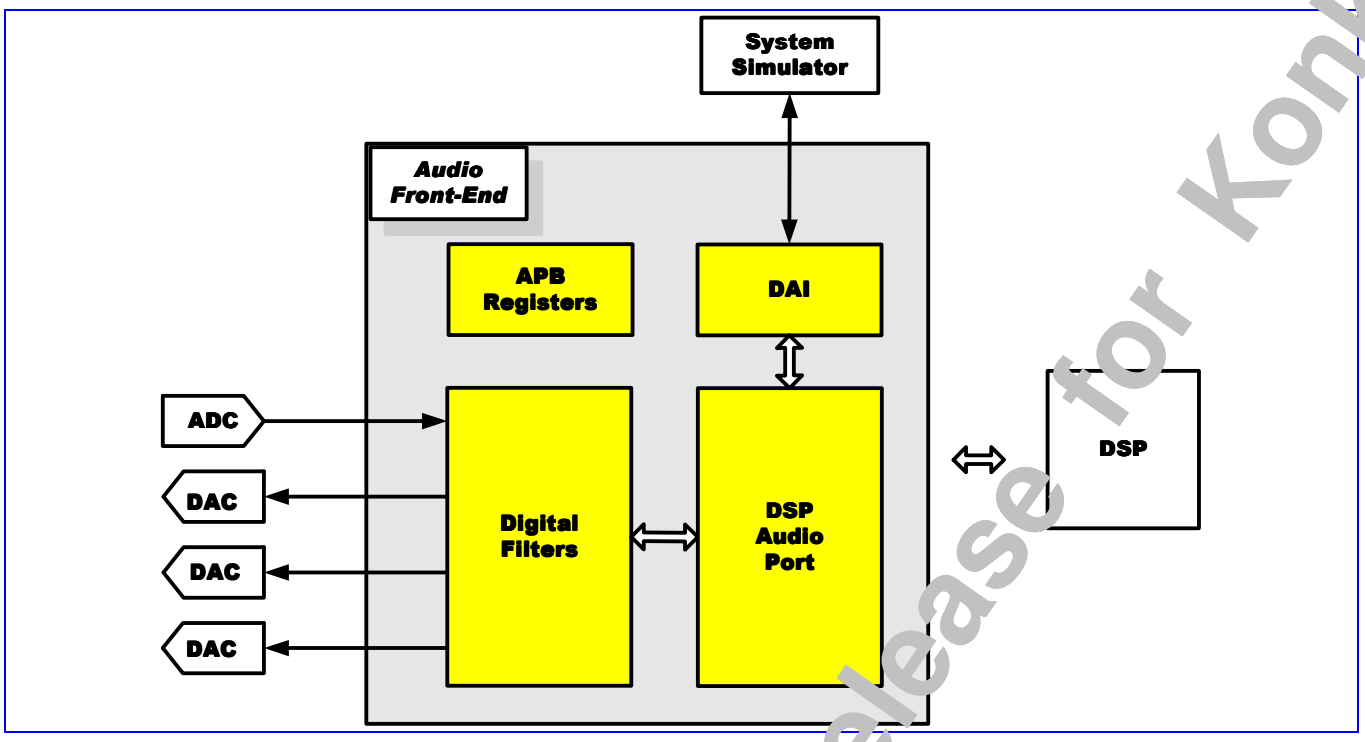

Figure 39 Block diagram of digital circuits of the audio front-end

To communicate with the external Bluetooth module, the master-mode PCM interface and master-mode I2S/EIAJ interface are supported. The clock of PCM interface is 256 KHz, and the frame sync is 8 KHz. Both long sync and short sync interfaces are supported. The PCM interface can transmit 16-bit stereo or 32-bit mono 8KHz sampling rate voice signal. **Figure 40** shows the timing diagram of the PCM interface. Note that the serial data changes when the clock is rising and is latched when the clock is falling.

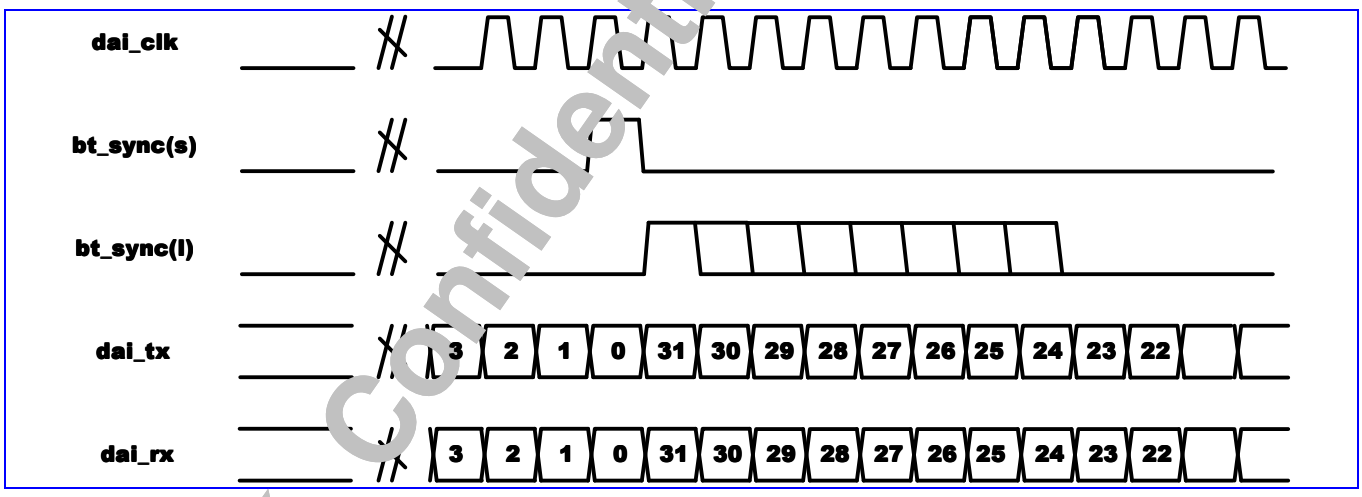

Figure 40 Timing diagram of Bluetooth application

I2S/EIAJ interface is designed to transmit high quality audio data. **Figure 40** and **Figure 41** illustrate the timing diagram of the two types of interfaces. I2S/EIAJ can support 32KHz, 44.1KHz, and 48KHz sampling rate audio signals. The

MTK Confidential Release for Konka

clock frequency of I2S/EIAJ can be 32×(sampling frequency), or 64×(sampling frequency). For example, to transmit a 44.1KHz CD-quality music, the clock frequency should be 32×44.1KHz = 1.4112MHz or 64×44.1KHz = 2.8224MHz.

I2S/EIAJ interface is not only used for Bluetooth module, but also for external DAC components. Audio data can easily be sent to the external DAC through the I2S/EIAJ interface.

In this document, the I2S/EIAJ interface is referred to as EDI (External DAC Interface).

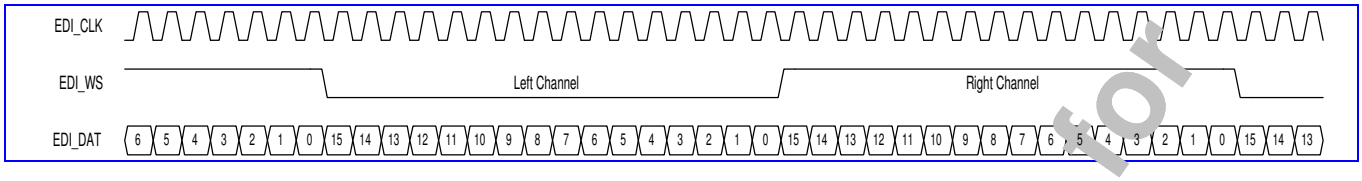

Figure 41 EDI Format 1: EIAJ (FMT = 0).

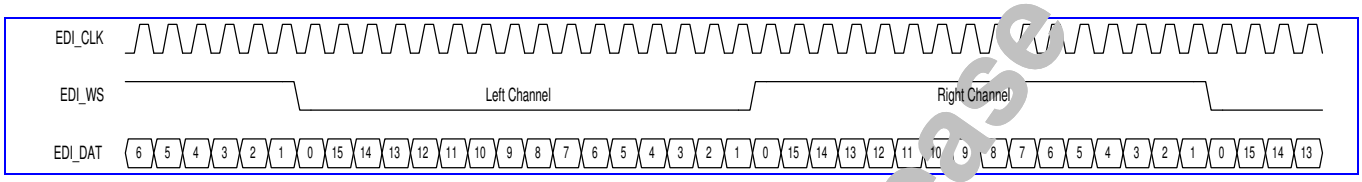

Figure 42 EDI Format 2: I^2S (FMT = 1).

7.1.1 DAI, PCM and EDI Pin Sharing

DAI, PCM, and EDI interfaces share the same pins. The pin mapping is listed in **Table 59**.

PIN NAME	DAI	PCM	EDI
DAI_CLK (OUTPUT)	DAI_CLK	PCM_CLK	EDI_CLK
DAI_TX (OUTPUT)	DAI_TX	PCM_OUT	EDI_DAT
DAI_RX (INPUT)	DAI_RX	PCM_IN	
BT_SYNC (OUTPUT)	-	PCM_SYNC	EDI_WS

Table 59 Pin mapping of DAI, PCM, and EDI interfaces.

Beside the shared pins, the EDI interface can also use other dedicated pins. With the dedicated pins, PCM and EDI interfaces can operate at the same time.

MTK Confidential Release for Konka

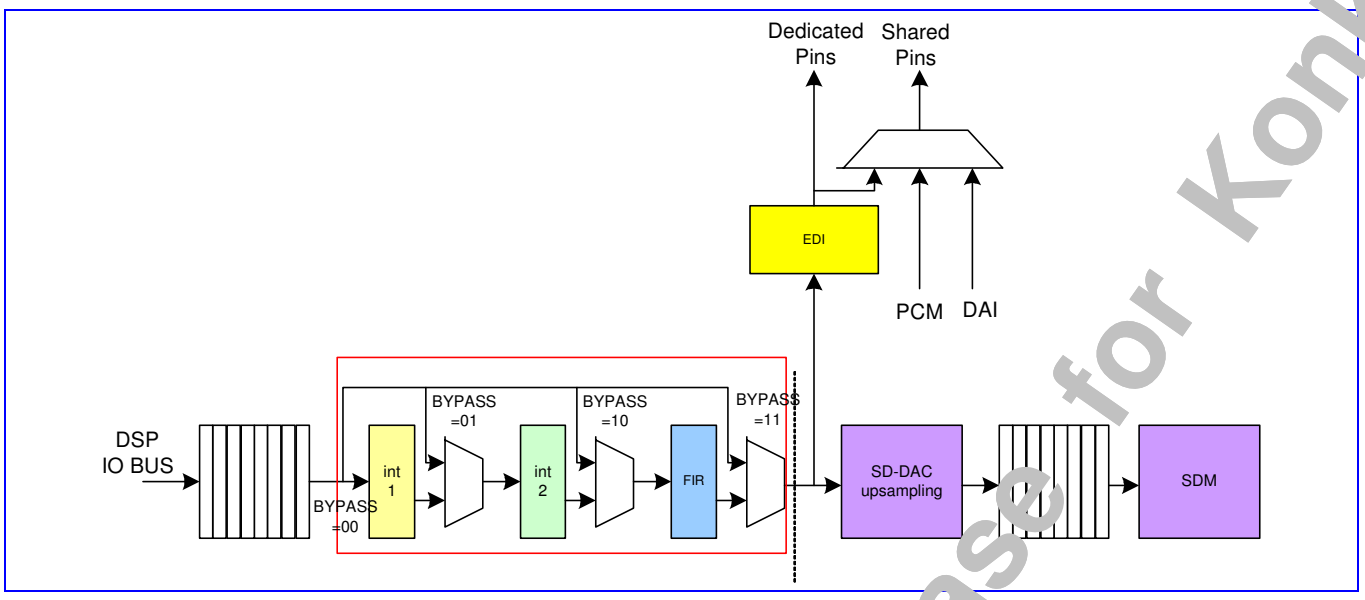

Figure 43 DAI, PCM, EDI interfaces

7.2 Register Definitions

MCU APB bus registers in audio front-end are listed as follows.

AFE+0000h AFE Voice MCU Control Register — AFE_VMCU_CON0

Bit	15	14	13	12	11	10	9	8	7	6	5	4	3	2	1	0
Name																VAFEON
Type																R/W
Reset																0

MCU sets this register to start AFE voice operation. A synchronous reset signal is issued, then periodical interrupts of 8-KHz frequency are issued. Clearing this register stops the interrupt generation.

VAFEON Turn on audio front-end operations.

AFE+000Ch AFE Voice Analog-Circuit Control Register 1 — AFE_VMCU_CON1

Bit	15	14	13	12	11	10	9	8	7	6	5	4	3	2	1	0
Name									VRSDON							
Type									R/W							
Reset									0							

Set this register for consistency of analog circuit setting. Suggested value is 80h.

VRSDON Turn on the voice-band redundant signed digit function.

0: 1-bit 2-level mode
1: 2-bit 3-level mode

MTK Confidential Release for Konka

AFE+0014h AFE Voice DAI Bluetooth Control Register AFE_VDB_CON

Bit	15	14	13	12	11	10	9	8	7	6	5	4	3	2	1	0
Name										EDION	VDAION	PCMON	VBTSYNC	VBTSLEN		
Type										RW	R/W	R/W	R/W	R/W		
Reset										0	0	0	0	000		

Set this register for DAI test mode and Bluetooth application.

EDION EDI signals are selected as the output of DAI, PCM, EDI shared interface.

- **0** EDI is not selected. A dedicated EDI interface can be enabled by programming the GPIO selection. Please refer to GPIO section for details.
- **1** EDI is selected. VDAION and VBTON are not set.

VDAION Turn on the DAI function.

VBTON Turn on the Bluetooth PCM function.

VBTSYNC Bluetooth PCM frame sync type

- **0**: short
- **1**: long

VBTSLEN Bluetooth PCM long frame sync length = VBTSLEN+1

AFE+0018h AFE Voice Look-Back mode Control Register AFE_VLB_CON

Bit	15	14	13	12	11	10	9	8	7	6	5	4	3	2	1	0
Name													VBYPASSIIR	VDAPINMODE	VINTINMODE	VDECINMODE
Type													R/W	R/W	R/W	R/W
Reset													0	0	0	0

Set this register for AFE voice digital circuit configuration control. Several loop back modes are implemented for test purposes. Default values correspond to the normal function mode.

VBYPASSIIR Bypass hardware IIR filters.

VDAPINMODE DSP audio port input mode control

- **0** Normal mode
- **1** Loop back mode

VINTINMODE interpolator input mode control

- **0** Normal mode
- **1** Loop back mode

VDECINMODE decimator input mode control

- **0** Normal mode

1 Loop back mode

AFE+0020h AFE Audio MCU Control Register 0 AFE_AMCU_CON0

Bit	15	14	13	12	11	10	9	8	7	6	5	4	3	2	1	0

MTK Confidential Release for Korka

Name																AAFE ON
Type																R/W
Reset																0

MCU sets this register to start AFE audio operation. A synchronous reset signal is issued, then periodical interrupts of 1/6 sampling frequency are issued. Clearing this register stops the interrupt generation.

AFE+0024h AFE Audio Control Register 1 AFE_AMCU

Bit	15	14	13	12	11	10	9	8	7	6	5	4	3	2	1
Name					BYPASS			ADITH ON	ADITHVAL		ARAMPSP		AMUTE R	AMUTE L	A
Type					RW			R/W	R/W		R/W		R/W	R/W	R
Reset					00			0	00		00		0	0	

MCU sets this register to inform hardware of the sampling frequency of audio being played back.

BYPASS To bypass part of the audio hardware path.

- **00** No bypass. The input data rate is 1/4 sampling frequency. For example, if the sampling frequency is 32KHz, then the input data rate is 8KHz.
- **01** Bypass the first stage of interpolation. The input data rate is 1/2 the sampling frequency.
- **10** Bypass two stages of interpolation. The input data rate is the same as the sampling frequency.
- **11** Bypass two stages of interpolation and EQ filter. The input data rate is the same as the sampling frequency.

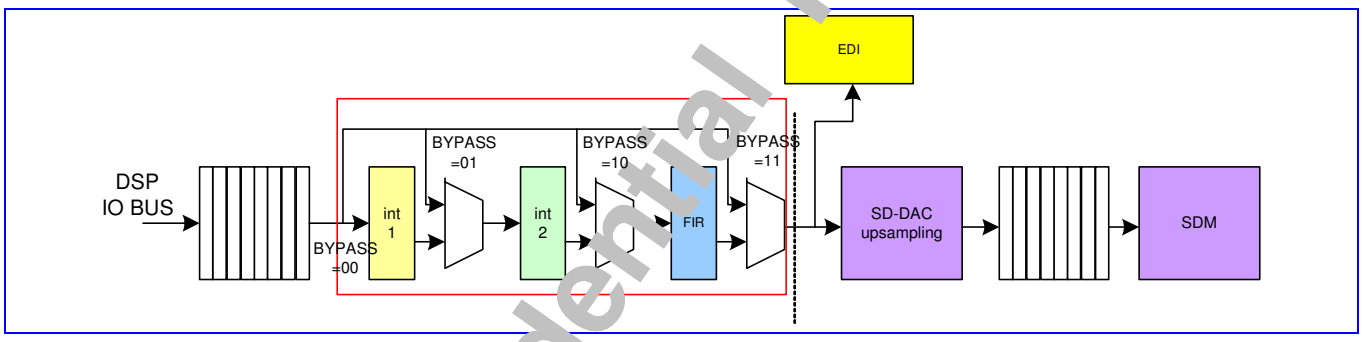

Figure 44 Block diagram of the audio path.

ADITHON Turn on the audio dither function.

ADITHVAL Dither scaling setting.

- **00** 1/4
- **01** 1/2
- **10** 1
- **11** 2

ARAMPSP ramp up/down speed selection

- **00** 8, 4096/AFS
- **01** 16, 2048/AFS
- **10** 24, 1024/AFS
- **11** 32, 512/AFS

MTK Confidential Release for Koika

AMUTER Mute the audio R-channel, with a soft ramp up/down.

AMUTEL Mute the audio L-channel, with a soft ramp up/down.

AFS Sampling frequency setting.

- **00** 32-KHz
- **01** 44.1-KHz
- **10** 48-KHz
- **11** reserved

AFE+0028h AFE EDI Control Register AFE_EDI_CON

Bit	15	14	13	12	11	10	9	8	7	6	5	4	3	2	1	0
Name										WCYCLE					FMT	EN
Type										R/W					R/W	R/W
Reset										01111					0	0

This register is used to control the EDI

EN Enable EDI. When EDI is disabled, EDI_DAT and EDI_WS hold low.

- **0** disable EDI
- **1** enable EDI

FMT EDI format

- **0** EIAJ
- **1** I2S

WCYCLE Clock cycle count in a word. Cycle count = WCYCLE + 1, and WCYCLE can be 15 or 31 only. Any other values result in an unpredictable error.

- **15** Cycle count is 16.
- **31** Cycle count is 32.

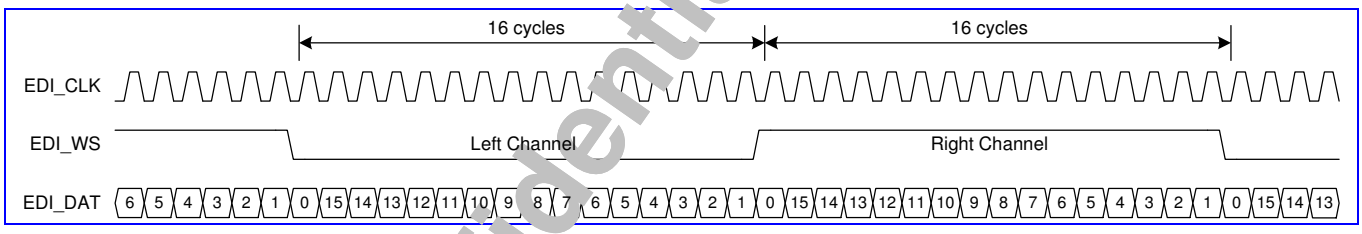

Figure 45 Cycle count is 16 for I2S format.

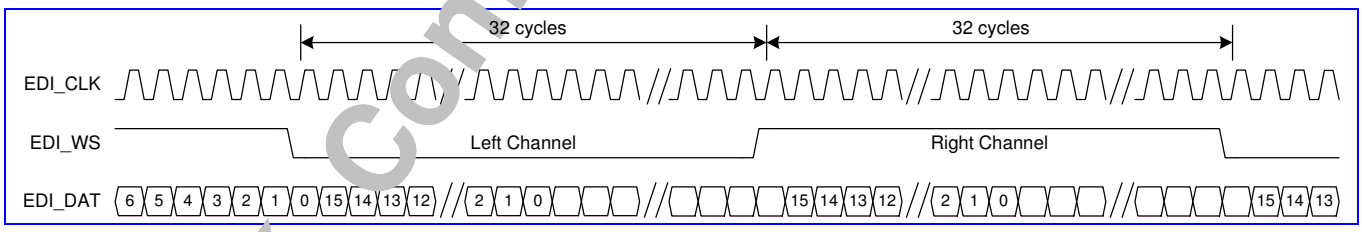

Figure 46 Cycle count is 32 for I2S format.

MTK Confidential Release for Konka

AFE+0040h~00F0h AFE Audio Equalizer Filter Coefficient Register AFE_EQCOEF

Bit	15	14	13	12	11	10	9	8	7	6	5	4	3	2	1	0
Name	A															
Type	WO															

Audio front-end provides a 45-tap equalizer filter. The filter is shown below.

DO = (A44 X DI44 + A43 X DI43 … + A1 X DI1 + A0 X DI0)/32768.

DIn is the input data, and An is the coefficient of the filter, which is a 16-bit 2's complement signed integer. DI0 is the last input data.

The coefficient cannot be programmed when the audio path is enabled, or unpredictable noise may be generated. If coefficient programming is necessary while the audio path is enabled, the audio path must be muted during programming. After programming is complete, the audio path is not to be resumed (unmated) for 100 sampling periods.

A Coefficient of the filter.

7.3 Programming Guide

Several cases – including speech call, voice memo record, voice memo playback, melody playback and DAI tests – requires that partial or the whole audio front-end be turned on.

The following are the recommended voice band path programming procedures to turn on audio front-end:

1. MCU programs the AFE_DAI_CON, AFE_LB_CON, AFE_VAG_CON, AFE_VAC_CON0, AFE_VAC_CON1 and AFE_VAPDN_CON registers for specific operation modes. Refer also to the analog chip interface specification.
2. MCU clears the VAFE bit of the PDN_CON2 register to ungate the clock for the voice band path. Refer to the software power down control specification.
3. MCU sets AFE_VMCU_CON to start operation of the voice band path.

The following are the recommended voice band path programming procedures to turn off audio front-end:

1. MCU programs AFE_VAPDN_CON to power down the voice band path analog blocks.
2. MCU clears AFE_VMCU_CON to stop operation of the voice band path.
3. MCU sets VAFE bit of PDN_CON2 register to gate the clock for the voice band path.

To start the DAI test, the MS first receives a GSM Layer 3 TEST_INTERFACE message from the SS and puts the speech transcoder into one of the following modes:

- Normal mode (VDAIMODE[1:0]: 00)
- Test of speech encoder/DTX functions (VDAIMODE[1:0]: 10)
- Test of speech decoder/DTX functions (VDAIMODE[1:0]: 01)
- Test of acoustic devices and A/D & D/A (VDAIMODE[1:0]: 11)

The MS then waits for DAIRST# signaling from the SS. Recognizing this, DSP starts to transmit to and/or receive from the DSP. For further details, refer to the GSM 11.10 specification.

MTK Confidential Release for Konka

The following are the recommended audio band path programming procedures to turn on audio front-end:

1. MCU programs the AFE_MCU_CON1, AFE_AAG_CON, AFE_AAC_CON, and AFE_AAPDN_CON registers for specific configurations. Refer also to the analog chip interface specification.
2. MCU clears the AAFE bit of the PDN_CON2 register to ungate the clock for the audio band path. Refer to the software power down control specification.
3. MCU sets AFE_AMCU_CON0 to start operation of the audio band path.

The following are the recommended audio band path programming procedures to turn off audio front-end:

1. MCU programs the AFE_AAPDN_CON to power down the audio band path analog blocks. Refer also to the analog block specification for further details.
2. MCU clears AFE_AMCU_CON0 to stop operation of the audio band path.
3. MCU sets the AAFE bit of the PDN_CON2 register to gate the clock for the audio band path.

MTK Confidential Release for Konka

8 Radio Interface Control

This chapter details the MT6228 interface control with the radio part of a GSM terminal. Providing a comprehensive control scheme, the MT6228 radio interface consists of Baseband Serial Interface (BSI), Baseband Parallel Interface (BPI), Automatic Power Control (APC) and Automatic Frequency Control (AFC), together with APC-DAC and AFC-DAC.

8.1 Baseband Serial Interface

The Baseband Serial Interface controls external radio components. A 3-wire serial bus transfers data to RF circuitry for PLL frequency change, reception gain setting, and other radio control purposes. In this unit, BSI data registers are double-buffered in the same way as the TDMA event registers. The user writes data into the write buffer and the data is transferred from the write buffer to the active buffer when a TDMA_EVTVAL signal (from the TDMA timer) is pulsed.

Each data register BSI_D*n*_DAT is associated with one data control register BSI_D*n*_CON, where *n* denotes the index. Each data control register identifies which events (signaled by TDMA_BSISTR*n*, generated by the TDMA timer) trigger the download process of the word in register BSI_D*n*_DAT. The word and its length (in bits) is downloaded via the serial bus. A special event is triggered when the IMOD flag is set to 1: it provides immediate download process without software programming the TDMA timer.

If more than one data word is to be downloaded on the same BSI event, the word with the lowest address among them is downloaded first, followed by the next lowest and so on.

The total download time depends on the word length, the number of words to download, and the clock rates. The programmer must space the successive event to provide enough time. If the download process of the previous event is not complete before a new event arrives, the latter is suppressed.

The unit has four output pins: BSI_CLK is the output clock, BSI_DATA is the serial data port, and BSI_CS0 and BSI_CS1 are the select pins for 2 external components. BSI_CS1 is multiplexed with another function. Please refer to GPIO table for more detail.

In order to support bi-directional read and write operations of the RF chip, software can directly write values to BSI_CLK, BSI_DATA and BSI_CS by programming the BSI_DOUT register. Data from the RF chip can be read by software via the register BSI_DIN. If the RF chip interface is a 3-wire interface, then BSI_DATA is bi-directional. Before software can program the 3-wire behavior, the BSI_IO_CON register must be set. An additional signal path from GPIO accommodates RF chips with a 4-wire interface.

The block diagram of the BSI unit is as depicted in **Figure 47.**

MTK Confidential Release for Konka

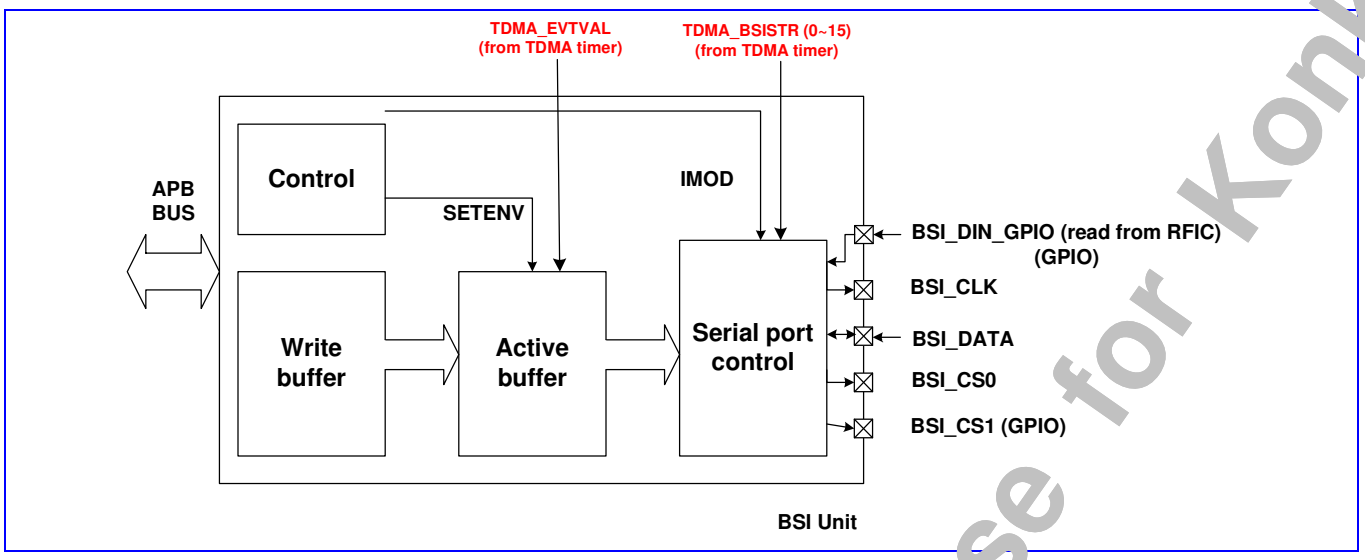

Figure 47 **Block diagram of BSI unit.**

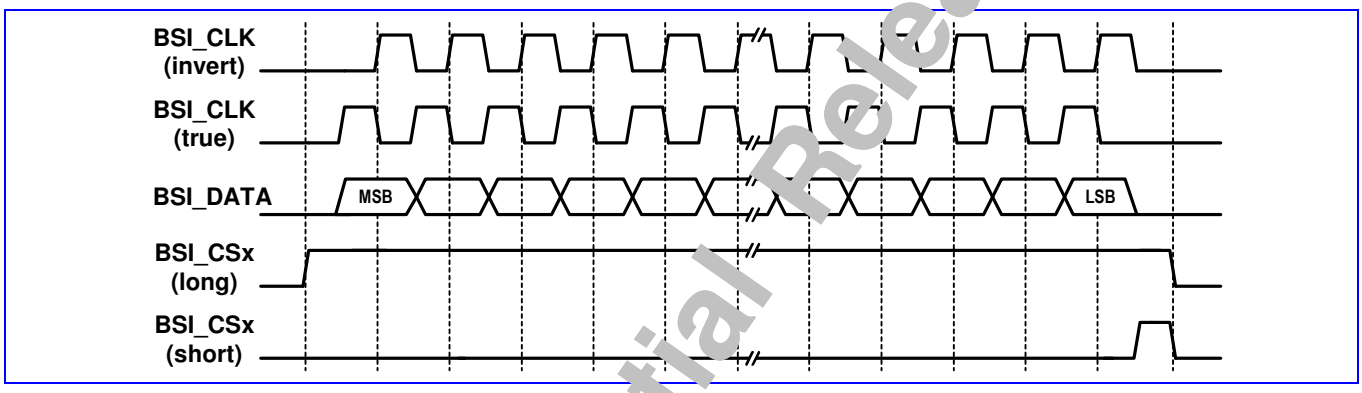

Figure 48 **Timing characteristic of BSI interface.**

8.1.1 Register Definitions

BSI+0000h BSI control register BSI_CON

Bit	15	14	13	12	11	10	9	8	7	6	5	4	3	2	1	0
Name								SETENV	EN1_POL	EN1_LEN	EN0_POL	EN0_LEN	IMOD	CLK_SPD		CLK_POL
Type								R/W	R/W	R/W	R/W	R/W	WO	R/W		R/W
Reset								0	0	0	0	0	N/A	0		0

This register is the control register for the BSI unit. The register controls the signal type of the 3-wire interface.

CLK_POL Controls the polarity of BSI_CLK. Refer to **Figure 48.**

- **0** True clock polarity
- **1** Inverted clock polarity

CLK_SPD Defines the clock rate of BSI_CLK. The 3-wire interface provides 4 choices of data bit rate. The default is 13/2 MHz.

- **00** 13/2 MHz

MTK Confidential Release for Konka

01 13/4 MHz
10 13/6 MHz
11 13/8 MHz

IMOD Enables immediate mode. If the user writes 1 to the flag, the download is triggered immediately without waiting for the timer events. The words for which the register event ID equals 1Fh are downloaded following this signal. This flag is write-only. The immediate write is exercised only once: the programmer must write the flag again to invoke another immediate download. Setting the flag does not disable the other events from the timer; the programmer can disable all events by setting BSI_ENA to all zeros.

ENX_LEN Controls the type of signals BSI_CS0 and BSI_CS1. Refer to **Figure 47.**

0 Long enable pulse
1 Short enable pulse

ENX_POL Controls the polarity of signals BSI_CS0 and BSI_CS1.

0 True enable pulse polarity
1 Inverted enable pulse polarity

SETENV Enables the write operation of the active buffer.

0 The user writes to the write buffer. The data is then latched in the active buffer after TDMA_EVTVAL is pulsed.
1 The user writes data directly to the active buffer.

BSI+0004h Control part of data register 0 BSI_D0_CON

Bit	15	14	13	12	11	10	9	8	7	6	5	4	3	2	1	0
Name	ISB			LEN								EVT_ID				
Type	R/W			R/W								R/W				

This register is the control part of the data register 0. The register determines the required length of the download data word, the event to trigger the download process of the word, and the targeted device.

Table 61 lists the 27 data registers of this type. Multiple data control registers may contain the same event ID: the data words of all registers with the same event ID are downloaded when the event occurs.

EVT_ID Stores the event ID for which the data word awaits to be downloaded.

00000~01111 Synchronous download of the word with the selected EVT_ID event. The relationship between this field and the event is listed as **Table 60.**

Event ID (in binary) – EVT_ID	Event name
00000	TDMA_BSISTR0
00001	TDMA_BSISTR1
00010	TDMA_BSISTR2
00011	TDMA_BSISTR3
00100	TDMA_BSISTR4
00101	TDMA_BSISTR5
00110	TDMA_BSISTR6
00111	TDMA_BSISTR7
01000	TDMA_BSISTR8
01001	TDMA_BSISTR9
01010	TDMA_BSISTR10

MTK Confidential Release for Konka

01011	TDMA_BSISTR11
01100	TDMA_BSISTR12
01101	TDMA_BSISTR13
01110	TDMA_BSISTR14
01111	TDMA_BSISTR15

Table 60 **The relationship between the value of EVT_ID field in the BSI control registers and the TDMA_BSISTR events.**

10000~11110 Reserved

11111 Immediate download

LEN Stores the length of the data word. The actual length is defined as LEN + 1 (in bits). The value ranges from 0 to 31, corresponding to 1 to 32 bits in length.

ISB The flag selects the target device.

0 Device 0 is selected.

1 Device 1 is selected.

BSI +0008h Data part of data register 0 BSI_D0_DAT

Bit	31	30	29	28	27	26	25	24	23	22	21	20	19	18	17	16
Name	DAT [31:16]															
Type	R/W															
Bit	15	14	13	12	11	10	9	8	7	6	5	4	3	2	1	0
Name	DAT [15:0]															
Type	R/W															

This register is the data part of the data register 0. The legal length of the data is up to 32 bits. The actual number of bits to be transmitted is specified in LEN field in the BSI_D0_CON register.

DAT The field signifies the data part of the data register.

Table 61 lists the address mapping and function of the 27 pairs of data registers.

Register Address	Register Function	Acronym
BSI +0004h	Control part of data register 0	BSI_D0_CON
BSI +0008h	Data part of data register 0	BSI_D0_DAT
BSI +000Ch	Control part of data register 1	BSI_D1_CON
BSI +0010h	Data part of data register 1	BSI_D1_ DAT
BSI +0014h	Control part of data register 2	BSI_D2_CON
BSI +0018h	Data part of data register 2	BSI_D2_ DAT
BSI +001Ch	Control part of data register 3	BSI_D3_CON
BSI +0020h	Data part of data register 3	BSI_D3_ DAT
BSI +0024h	Control part of data register 4	BSI_D4_CON
BSI +0028h	Data part of data register 4	BSI_D4_ DAT
BSI +002Ch	Control part of data register 5	BSI_D5_CON
BSI +0030h	Data part of data register 5	BSI_D5_ DAT
BSI +0034h	Control part of data register 6	BSI_D6_CON
BSI +0038h	Data part of data register 6	BSI_D6_ DAT

MTK Confidential Release for Konka

BSI +003Ch	Control part of data register 7	BSI_D7_CON
BSI +0040h	Data part of data register 7	BSI_D7_ DAT
BSI +0044h	Control part of data register 8	BSI_D8_CON
BSI +0048h	Data part of data register 8	BSI_D8_ DAT
BSI +004Ch	Control part of data register 9	BSI_D9_CON
BSI +0050h	Data part of data register 9	BSI_D9_ DAT
BSI +0054h	Control part of data register 10	BSI_D10_CON
BSI +0058h	Data part of data register 10	BSI_D10_ DATA
BSI +005Ch	Control part of data register 11	BSI_D11_CON
BSI +0060h	Data part of data register 11	BSI_D11_ DAT
BSI +0064h	Control part of data register 12	BSI_D12_CON
BSI +0068h	Data part of data register 12	BSI_D12_ DAT
BSI +006Ch	Control part of data register 13	BSI_D13_CON
BSI +0070h	Data part of data register 13	BSI_D13_ DAT
BSI +0074h	Control part of data register 14	BSI_D14_CON
BSI +0078h	Data part of data register 14	BSI_D14_ DAT
BSI +007Ch	Control part of data register 15	BSI_D15_CON
BSI +0080h	Data part of data register 15	BSI_D15_ DAT
BSI +0084h	Control part of data register 16	BSI_D16_CON
BSI +0088h	Data part of data register 16	BSI_D16_ DAT
BSI +008Ch	Control part of data register 17	BSI_D17_CON
BSI +0090h	Data part of data register 17	BSI_D17_ DAT
BSI +0094h	Control part of data register 18	BSI_D18_CON
BSI +0098h	Data part of data register 18	BSI_D18_ DAT
BSI +009Ch	Control part of data register 19	BSI_D19_CON
BSI +00A0h	Data part of data register 19	BSI_D19_ DAT
BSI +00A4h	Control part of data register 20	BSI_D20_CON
BSI +00A8h	Data part of data register 20	BSI_D20_ DAT
BSI +00ACh	Control part of data register 21	BSI_D21_CON
BSI +00B0h	Data part of data register 21	BSI_D21_ DAT
BSI +00B4h	Control part of data register 22	BSI_D22_CON
BSI +00B8h	Data part of data register 22	BSI_D22_ DAT
BSI +00BCh	Control part of data register 23	BSI_D23_CON
BSI +00C0h	Data part of data register 23	BSI_D23_ DAT
BSI +00C4h	Control part of data register 24	BSI_D24_CON
BSI +00C8h	Data part of data register 24	BSI_D24_ DAT
BSI +00CCh	Control part of data register 25	BSI_D25_CON
BSI +00D0h	Data part of data register 25	BSI_D25_ DAT
BSI +00D4h	Control part of data register 26	BSI_D26_CON

MTK Confidential Release to Konka

BSI +00D8h	Data part of data register 26	**BSI_D26_ DAT**

Table 61 **BSI data registers**

BSI +0190h BSI event enable register BSI_ENA

Bit	15	14	13	12	11	10	9	8	7	6	5	4	3	2	1	0
Name	BSI15	BSI14	BSI13	BSI12	BSI11	BSI10	BSI9	BSI8	BSI7	BSI6	BSI5	BSI4	BSI3	BSI2	BSI1	BSI0
Type	R/W	R/W	R/W	R/W	R/W	R/W	R/W	R/W	R/W	R/W	R/W	R/W	R/W	R/W	R/W	R/W
Reset	1	1	1	1	1	1	1	1	1	1	1	1	1	1	1	1

This register enables an event by setting the corresponding bit. After a hardware reset, all bits are initialized to 1. These bits are also set to 1 after TDMA_EVTVAL pulse.

BSIx Enables downloading of the words corresponding to the events signaled by TMDA_BSI.

- **0** The event is not enabled.
- **1** The event is enabled.

BSI +0194h BSI IO mode control register BSI_IO_CON

Bit	15	14	13	12	11	10	9	8	7	6	5	4	3	2	1	0
Name													SEL_ CS1	4_WIR E	DAT_ DIR	MODE
Type	R/W	R/W	R/W	R/W	R/W	R/W	R/W	R/W	R/W	R/W	R/W	R/W	R/W	R/W	R/W	R/W
Reset	0	0	0	0	0	0	0	0	0	0	0	0	0	0	1	0

MODE Defines the source of BSI signal.

- **0** BSI signal is generated by the hardware.
- **1** BSI signal is generated by the software. In this mode, the BSI clock depends on the value of the field DOUT.CLK. BSI_CS depends on the value of the field DOUT.CS and BSI_DATA depends on the value of the field DOUT.DATA.

DAT_DIR Defines the direction of BSI_DATA.

- **0** BSI _DATA is configured as input. The 3-wire interface is used and BSI_DATA is bi-directional.
- **1** BSI_DATA is configured as output.

4_WIRE Defines the BSI_DIN source.

- **0** The 3-wire interface is used and BSI_DATA is bi-directional. BSI_DIN comes from the same pin as BSI_DATA.
- **1** The 4-wire interface is used. Another pin (GPIO) is used as BSI_DIN.

SEL_CS1 Defines which of the BSI_CSx (BSI_CS0 or BSI_CS1) is written by the software.

- **0** BSI_CS0 is selected.
- **1** BSI_CS1 is selected.

BSI +0198h Software-programmed data out BSI_DOUT

Bit	15	14	13	12	11	10	9	8	7	6	5	4	3	2	1	0
Name														DATA	CS	CLK
Type	R/W	R/W	R/W	R/W	R/W	R/W	R/W	R/W	R/W	R/W	R/W	R/W	R/W	W	W	W
Reset	0	0	0	0	0	0	0	0	0	0	0	0	0	0	0	0

CLK Signifies the BSI_CLK signal.

CS Signifies the BSI_CS signal.

DATA Signifies the BSI_DATA signal.

MTK Confidential Release for Konka

BSI +019ch Input data from RF chip BSI_DIN

Bit	15	14	13	12	11	10	9	8	7	6	5	4	3	2	1	0
Name																DIN
Type	R/W	R/W	R/W	R/W	R/W	R/W	R/W	R/W	R/W	R/W	R/W	R/W	R/W	R/W	R/W	R
Reset	0	0	0	0	0	0	0	0	0	0	0	0	0	0	0	0

DIN Registers the input value of BSI_DATA from the RF chip.

8.2 Baseband Parallel Interface

8.2.1 General Description

The Baseband Parallel Interface features 10 control pins, which are used for timing-critical external circuits. These pins typically control front-end components which must be turned on or off at specific times during GSM operation, such as transmit-enable, band switching, TR-switch, etc.

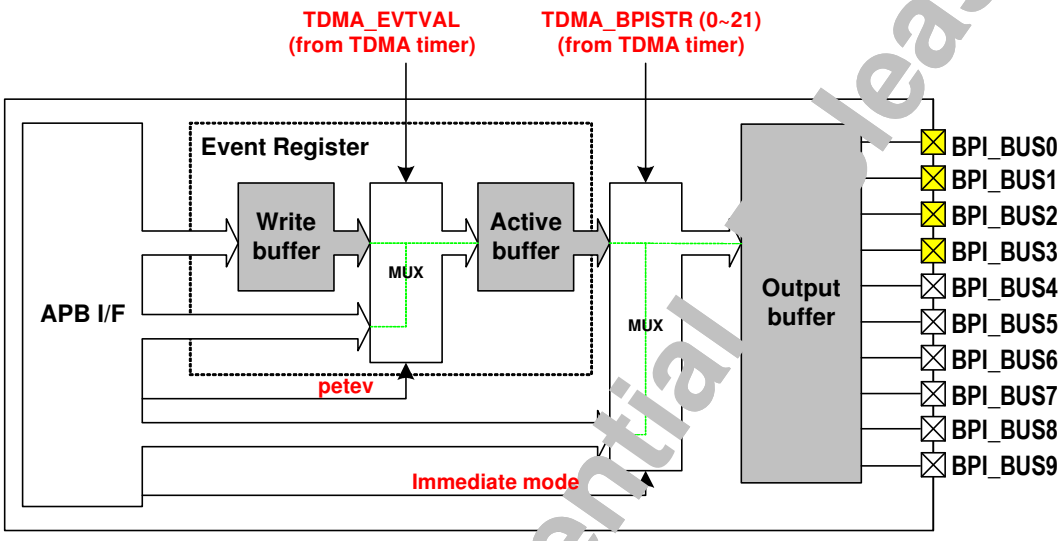

☒ **The driving capability is configurable.**

☒ **The driving capability is fixed.**

Figure 49 **Block diagram of BPI interface**

The user can program 22 sets of 10-bit registers to set the output value of BPI_BUS0~BPI_BUS9. The data is stored in the write buffers. The write buffers are then forwarded to the active buffers when the TDMA_EVTVAL signal is pulsed, usually once per frame. Each of the 22 write buffers corresponds to an active buffer, as well as to a TDMA event.

Each TDMA_BPISTR event triggers the transfer of data in the corresponding active buffer to the output buffer, thus changing the value of the BPI bus. The user can disable the events by programming the enable registers in the TDMA timer. If the TDMA_BPISTR event is disabled, the corresponding signal TDMA_BPISTR is not pulsed, and the value on the BPI bus remains unchanged.

For applications in which BPI signals serve as the switch, current-driving components are typically added to enhance driving capability. Four configurable output pins provide current up to 8 mA, and help reduce the number of external

MTK Confidential – Release for Korka

components. The output pins BPI_BUS6, BPI_BUS7, BPI_BUS8, and BPI_BUS9 are multiplexed with GPIO. Please refer to the GPIO table for more detailed information.

8.2.2 Register Definitions

BPI+0000h BPI control register BPI_CON

Bit	15	14	13	12	11	10	9	8	7	6	5	4	3	2	1	0
Name												PINM3	PINM2	PINM1	PINM0	PETEV
Type												WO	WO	WO	WO	R/W
Reset												0	0	0	0	0

This register is the control register of the BPI unit. The register controls the direct access mode of the active buffer and the current driving capability for the output pins.

The driving capabilities of BPI_BUS0, BPI_BUS1, BPI_BUS2, and BPI_BUS3 can be 2 mA or 8 mA, determined by the value of PINM0, PINM1, PINM2, and PINM3, respectively. These output pins provide a higher driving capability and save on external current-driving components. In addition to the configurable pins, pins BPI_BUS4 to BPI_BUS9 provide a driving capability of 2 mA (fixed).

PETEV Enables direct access to the active buffer.

- **0** The user writes data to the write buffer. The data is latched in the active buffer after the TDMA_EVTVAL signal is pulsed.
- **1** The user directly writes data to the active buffer without waiting for the TDMA_EVTVAL signal.

PINM0 Controls the driving capability of BPI_BUS0.

- **0** The output driving capability is 2mA.
- **1** The output driving capability is 8mA.

PINM1 Controls the driving capability of BPI_BUS1.

- **0** The output driving capability is 2mA.
- **1** The output driving capability is 8mA.

PINM2 Controls the driving capability of BPI_BUS2.

- **0** The output driving capability is 2mA.
- **1** The output driving capability is 8mA.

PINM3 Controls the driving capability of BPI_BUS3.

- **0** The output driving capability is 2mA.
- **1** The output driving capability is 8mA.

BPI +0004h BPI data register 0 BPI_BUF0

Bit	15	14	13	12	11	10	9	8	7	6	5	4	3	2	1	0
Name							PO9	PO8	PO7	PO6	PO5	PO4	PO3	PO2	PO1	PO0
Type							R/W	R/W	R/W	R/W	R/W	R/W	R/W	R/W	R/W	R/W

This register defines the BPI signals that are associated with the event TDMA_BPI0.

Table 62 lists 22 registers of the same structure, each of which is associated with one specific event signal from the TDMA timer. The data registers are all double-buffered. When PETEV is set to 0, the data register links to the write buffer. When PETEV is set to 1, the data register links to the active buffer.

MTK Confidential Release for Konka

One register, BPI_BUFI, is dedicated for use in immediate mode. Writing a value to that register effects an immediate change in the corresponding BPI signal and bus.

POx This flag defines the corresponding signals for BPIx after the TDMA event 0 takes place.

The overall data register definition is listed in **Table 62.**

Register Address	Register Function	Acronym
BPI +0004h	BPI pin data for event TDMA_BPI 0	BPI_BUF0
BPI +0008h	BPI pin data for event TDMA_BPI 1	BPI_BUF1
BPI +000Ch	BPI pin data for event TDMA_BPI 2	BPI_BUF2
BPI +0010h	BPI pin data for event TDMA_BPI 3	BPI_BUF3
BPI +0014h	BPI pin data for event TDMA_BPI 4	BPI_BUF4
BPI +0018h	BPI pin data for event TDMA_BPI 5	BPI_BUF5
BPI +001Ch	BPI pin data for event TDMA_BPI 6	BPI_BUF6
BPI +0020h	BPI pin data for event TDMA_BPI 7	BPI_BUF7
BPI +0024h	BPI pin data for event TDMA_BPI 8	BPI_BUF8
BPI +0028h	BPI pin data for event TDMA_BPI 9	BPI_BUF9
BPI +002Ch	BPI pin data for event TDMA_BPI 10	BPI_BUF10
BPI +0030h	BPI pin data for event TDMA_BPI 11	BPI_BUF11
BPI +0034h	BPI pin data for event TDMA_BPI 12	BPI_BUF12
BPI +0038h	BPI pin data for event TDMA_BPI 13	BPI_BUF13
BPI +003Ch	BPI pin data for event TDMA_BPI 14	BPI_BUF14
BPI +0040h	BPI pin data for event TDMA_BPI 15	BPI_BUF15
BPI +0044h	BPI pin data for event TDMA_BPI 16	BPI_BUF16
BPI +0048h	BPI pin data for event TDMA_BPI 17	BPI_BUF17
BPI +004Ch	BPI pin data for event TDMA_BPI 18	BPI_BUF18
BPI +0050h	BPI pin data for event TDMA_BPI 19	BPI_BUF19
BPI +0054h	BPI pin data for event TDMA_BPI 20	BPI_BUF20
BPI +0058h	BPI pin data for event TDMA_BPI 21	BPI_BUF21
BPI +005Ch	BPI pin data for immediate mode	BPI_BUFI

Table 62 **BPI Data Registers.**

BPI +0060h BPI event enable register 0 BPI_ENA0

Bit	15	14	13	12	11	10	9	8	7	6	5	4	3	2	1	0
Name	BEN15	BEN14	BEN13	BEN12	BEN11	BEN10	BEN9	BEN8	BEN7	BEN6	BEN5	BEN4	BEN3	BEN2	BEN1	BEN0
Type	R/W	R/W	R/W	R/W	R/W	R/W	R/W	R/W	R/W	R/W	R/W	R/W	R/W	R/W	R/W	R/W
Reset	1	1	1	1	1	1	1	1	1	1	1	1	1	1	1	1

This register enables the events that are signaled by the TDMA timer: by clearing a register bit, the corresponding event signal is ignored. After a hardware reset, all the enable bits default to 1 (enabled). Upon receiving a TDMA_EVTVAL pulse, all register bits are also set to 1 (enabled).

BENn This flag indicates whether event n signals are heeded or ignored.

MTK Confidential Release for Konka

0 Event n is disabled (ignored).

1 Event n is enabled.

BPI+0064h BPI event enable register 1 BPI_ENA1

Bit	15	14	13	12	11	10	9	8	7	6	5	4	3	2	1	0
Name											BEN21	BEN20	BEN19	BEN18	BEN17	BEN16
Type											R/W	R/W	R/W	R/W	R/W	R/W
Reset											0	0	0	0	0	0

This register enables the events that are signaled by the TDMA timing generator: by clearing a register bit, the corresponding event signal is ignored. After a hardware reset, all the enable bits default to 1 (enabled). Upon receiving the TDMA_EVTVAL pulse, all register bits are also set to 1 (enabled).

BENn This flag indicates whether event n signals are heeded or ignored.

0 Event n is disabled (ignored).

1 Event n is enabled.

8.3 Automatic Power Control (APC) Unit

8.3.1 General Description

The Automatic Power Control (APC) unit controls the Power Amplifier (PA) module. Through APC unit, the proper transmit power level of the handset can be set to ensure that burst power ramping requirements are met. In one TDMA frame, up to 7 TDMA events can be enabled to support multi-slot transmission. In practice, 5 banks of ramp profiles are used in one frame to make up 4 consecutive transmission slots.

The shape and magnitude of the ramp profiles are configurable to fit ramp-up (ramp up from zero), intermediate ramp (ramp between transmission windows), and ramp-down (ramp down to zero) profiles. Each bank of the ramp profile consists of 16 8-bit unsigned values, which are adjustable for different conditions.

The entries from one bank of the ramp profile are partitioned into two parts, with 8 values in each half. In normal operation, the entries in the left half are multiplied by a 10-bit left scaling factor, and the entries in the right half are multiplied by a 10-bit right scaling factor. The values are then truncated to form 16 10-bit intermediate values. Finally the intermediate ramp profile are linearly interpolated into 32 10-bit values and sequentially used to update the D/A converter. The block diagram of the APC unit is shown in **Figure 50 .**

The APB bus interface is 32 bits wide. Four write accesses are required to program each bank of ramp profile. The detailed register allocations are listed in **Table 63.**

MTK Confidential Release for Konka

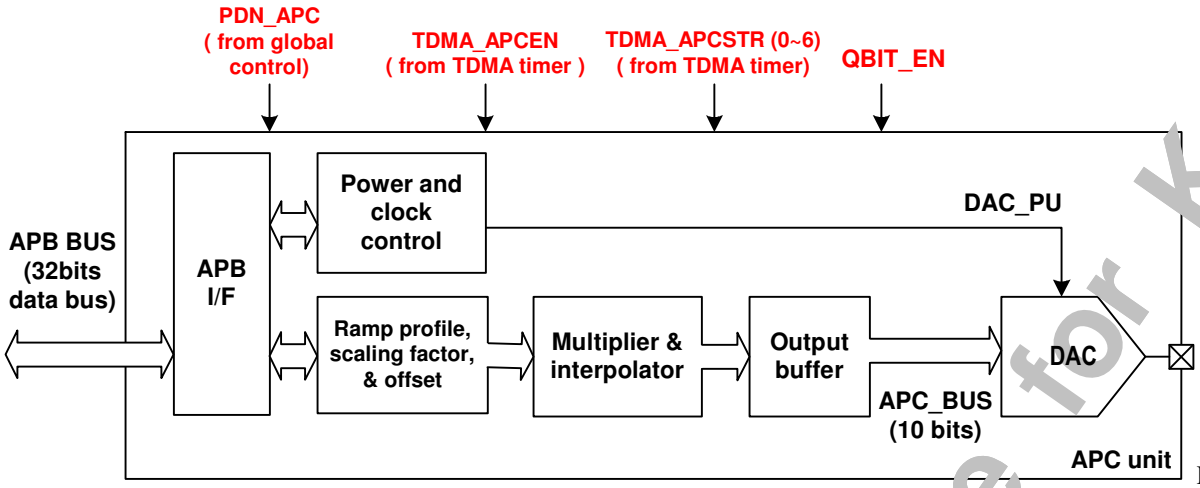

Figure 50 **Block diagram of APC unit.**

8.3.2 Register Definitions

APC+0000h APC 1st ramp profile #0 APC_PFA0

Bit	31	30	29	28	27	26	25	24	23	22	21	20	19	18	17	16
Name	ENT3								ENT2							
Type	R/W								R/W							
Bit	15	14	13	12	11	10	9	8	7	6	5	4	3	2	1	0
Name	ENT1								ENT0							
Type	R/W								R/W							

The register stores the first four entries of the first power ramp profile. The first entry resides in the least significant byte [7:0], the second entry in the second byte [15:8], the third entry in the third byte [23:16], and the fourth in the most significant byte [31:24]. Since this register provides no hardware reset, the programmer must configure it before any APC event takes place.

ENT3 The field signifies the 4th entry of the 1st ramp profile.
ENT2 The field signifies the 3rd entry of the 1st ramp profile.
ENT1 The field signifies the 2nd entry of the 1st ramp profile.
ENT0 The field signifies the 1st entry of the 1st ramp profile.

The overall ramp profile register definition is listed in **Table 63.**

Register Address	Register Function	Acronym
APC +0000h	APC 1st ramp profile #0	APC_PFA0
APC +0004h	APC 1st ramp profile #1	APC_PFA1
APC +0008h	APC 1st ramp profile #2	APC_PFA2
APC +000Ch	APC 1st ramp profile #3	APC_PFA3
APC +0020h	APC 2nd ramp profile #0	APC_PFB0
APC +0024h	APC 2nd ramp profile #1	APC_PFB1
APC +0028h	APC 2nd ramp profile #2	APC_PFB2
APC +002Ch	APC 2nd ramp profile #3	APC_PFB3
APC +0040h	APC 3rd ramp profile #0	APC_PFC0

MTK Confidential Release for Konka

APC +0044h	APC 3rd ramp profile #1	APC_PFC1
APC +0048h	APC 3rd ramp profile #2	APC_PFC2
APC +004Ch	APC 3rd ramp profile #3	APC_PFC3
APC +0060h	APC 4th ramp profile #0	APC_PFD0
APC +0064h	APC 4th ramp profile #1	APC_PFD1
APC +0068h	APC 4th ramp profile #2	APC_PFD2
APC +006Ch	APC 4th ramp profile #3	APC_PFD3
APC +0080h	APC 5th ramp profile #0	APC_PFE0
APC +0084h	APC 5th ramp profile #1	APC_PFE1
APC +0088h	APC 5th ramp profile #2	APC_PFE2
APC +008Ch	APC 5th ramp profile #3	APC_PFE3
APC +00A0h	APC 6th ramp profile #0	APC_PFF0
APC +00A4h	APC 6th ramp profile #1	APC_PFF1
APC +00A8h	APC 6th ramp profile #2	APC_PFF2
APC +00ACh	APC 6th ramp profile #3	APC_PFF3
APC +00C0h	APC 7th ramp profile #0	APC_PFG0
APC +00C4h	APC 7th ramp profile #1	APC_PFG1
APC +00C8h	APC 7th ramp profile #2	APC_PFG2
APC +00CCh	APC 7th ramp profile #3	APC_PFG3

Table 63 **APC ramp profile registers**

APC +0010h APC 1st ramp profile left scaling factor APC_SCAL0L

Bit	15	14	13	12	11	10	9	8	7	6	5	4	3	2	1	0
Name							SF									
Type							R/W									
Reset							1_0000_0000									

The register stores the left scaling factor of the 1st ramp profile. This factor multiplies the first 8 entries of the 1st ramp profile to provide the scaled profile, which is then interpolated to control the D/A converter.

After a hardware reset, the initial value of the register is 256. In this case, no scaling is done (each entry of the ramp profile is multiplied by 1), because the 8 least significant bits are truncated after multiplication.

The overall scaling factor register definition is listed in **Table 64 .**

SF Scaling factor. After a hardware reset, the value is 256.

APC +0014h APC 1st ramp profile right scaling factor APC_SCAL0R

Bit	15	14	13	12	11	10	9	8	7	6	5	4	3	2	1	0
Name							SF									
Type							R/W									
Reset							1_0000_0000									

The register stores the right scaling factor of the 1st ramp profile. This factor multiplies the last 8 entries of the 1st ramp profile to provide the scaled profile, which is then interpolated to control the D/A converter.

MTK Confidential Release for Konka

After a hardware reset, the initial value of the register is 256. In this case, no scaling is done (each entry of the ramp profile is multiplied by 1), because the 8 least significant bits are truncated after multiplication.

The overall scaling factor register definition is listed in **Table 64 .**

SF Scaling factor. After a hardware reset, the value is 256.

APC+0018h APC 1st ramp profile offset value APC_OFFSET0

Bit	15	14	13	12	11	10	9	8	7	6	5	4	3	2	1	0
Name							OFFSET									
Type							R/W									
Reset							0									

There are 7 offset values for the corresponding ramp profile.

The 1st offset value also serves as the pedestal value. The value is used to power up the APC D/A converter before the RF signals start to transmit. The D/A converter is then biased on the value, to provide the initial control voltage for the external control loop. The exact value depends on the characteristics of the external components. The timing to output the pedestal value is configurable through the TDMA_BULCON2 register of the timing generator; its valid range is 0~127 quarter-bits of time after the baseband D/A converter is powered up.

OFFSET Offset value for the corresponding ramp profile. After a hardware reset, the default value is 0.
The overall offset register definition is listed in **Table 64.**

Register Address	Register Function	Acronym
APC +0010h	APC 1st ramp profile left scaling factor	APC_SCAL0L
APC +0014h	APC 1st ramp profile right scaling factor	APC_SCAL0R
APC +0018h	APC 1st ramp profile offset value	APC_OFFSET0
APC +0030h	APC 2nd ramp profile left scaling factor	APC_SCAL1L
APC +0034h	APC 2nd ramp profile right scaling factor	APC_SCAL1R
APC +0038h	APC 2nd ramp profile offset value	APC_OFFSET1
APC +0050h	APC 3rd ramp profile left scaling factor	APC_SCAL2L
APC +0054h	APC 3rd ramp profile right scaling factor	APC_SCAL2R
APC +0058h	APC 3rd ramp profile offset value	APC_OFFSET2
APC +0070h	APC 4th ramp profile left scaling factor	APC_SCAL3L
APC +0074h	APC 4th ramp profile right scaling factor	APC_SCAL3R
APC +0078h	APC 4th ramp profile offset value	APC_OFFSET3
APC +0090h	APC 5th ramp profile left scaling factor	APC_SCAL4L
APC +0094h	APC 5th ramp profile right scaling factor	APC_SCAL4R
APC +0098h	APC 5th ramp profile offset value	APC_OFFSET4
APC +00B0h	APC 6th ramp profile left scaling factor	APC_SCAL5L
APC +00B4h	APC 6th ramp profile right scaling factor	APC_SCAL5R
APC +00B8h	APC 6th ramp profile offset value	APC_OFFSET5
APC +00D0h	APC 7th ramp profile left scaling factor	APC_SCAL6L
APC +00D4h	APC 7th ramp profile right scaling factor	APC_SCAL6R
APC +00D8h	APC 7th ramp profile offset value	APC_OFFSET6

Table 64 **APC scaling factor and offset value registers**

MTK Confidential Release for Konka

APC+00E0h APC control register APC_CON

Bit	15	14	13	12	11	10	9	8	7	6	5	4	3	2	1	0
Name															GSM	FPU
Type															R/W	R/W
Reset															1	0

GSM Defines the operation mode of the APC module. In GSM mode, each frame has only one slot, thus only one scaling factor and one offset value must be configured. If the GSM bit is set, the programmer needs only to configure APC_SCAL0L and APC_OFFSET0. If the bit is not set, the APC module is operating in GPRS mode.

- **0** The APC module is operating in GPRS mode.
- **1** The APC module is operating in GSM mode. Default value.

FPU Forces the APC D/A converter to power up. Test only.

- **0** The APC D/A converter is not forced to power up. The converter is only powered on when the transmission window is opened. Default value.
- **1** The APC D/A converter is forced to power up.

8.3.3 Ramp Profile Programming

The first value of the first normalized ramp profile must be written in the least significant byte of the APC_PFA0 register. The second value must be written in the second least significant byte of the APC_PFA0, and so on.

Each ramp profile can be programmed to form an arbitrary shape.

The start of ramping is triggered by one of the TDMA_APCSTR signals. The timing relationship between TDMA_APCSTR and TDMA slots is depicted in **Figure 51** for 4 consecutive time slots case. The power ramping profile must comply with the timing mask defined in GSM SPEC 05.05. The timing offset values for 7 ramp profiles are stored in the TDMA timer register from TDMA_APC0 to TDMA_APC6.

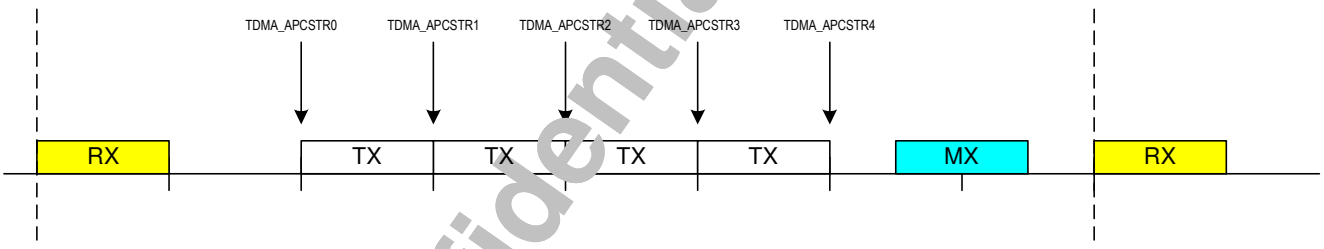

Figure 51 **Timing diagram of TDMA_APCSTR.**

Because the APC unit provides more than 5 ramp profiles, up to 4 consecutive transmission slots can accommodated. The 2 additional ramp profiles are useful particularly when the timing between the last 2 transmission time slots and CTIRQ is uncertain; software can begin writing the ramp profiles for the succeeding frame during the current frame, alleviating the risk of not writing the succeeding frame's profile data in time.

In GPRS mode, to fit the intermediate ramp profile between different power levels, a simple scaling scheme is used to synthesize the ramp profile. The equation is as follows:

MTK Confidential Release for Korka

$$DA_0 = OFF + S_0 \cdot \frac{DN_{15,pre} + DN_0}{2}$$

$$DA_{2k} = OFF + S_l \cdot \frac{DN_{k-1} + DN_k}{2}, k = 1,...,15$$

$$DA_{2k+1} = OFF + S_l \cdot DN_k, k = 0,1,...,15$$

$$l = \begin{cases} 0, & \text{if } 8 > k \geq 0 \\ 1, & \text{if } 15 \geq k \geq 8 \end{cases}$$

where **DA** = the data to present to the D/A converter,
DN = the normalized data which is stored in the register **APC_PF*n***,
S_0 = the left scaling factor stored in register **APC_SCAL*nL***,
S_1 = the right scaling factor stored in register **APC_SCAL*nR***, and
OFF = the offset value stored in the register **APC_OFFSET*n***.

The subscript ***n*** denotes the index of the ramp profile.

The ramp calculation before interpolation is as depicted in **Figure 52**.

During each ramp process, each word of the normalized profile is first multiplied by 10-bit scaling factors and added to an offset value to form a bank of 18-bit words. The first 8 words (in the left half part as in **Figure 52**) are multiplied by the left scaling factor **S_0** and the last 8 words (in the right half part as in **Figure 52**) are multiplied by the right scaling factor **S_1**. The lowest 8 bits of each word are then truncated to get a 10-bit result. The scaling factor is 0x100, which represents no scaling on reset. A value smaller than 0x100 scales the ramp profile down, and a value larger than 100 scales the ramp profile up.

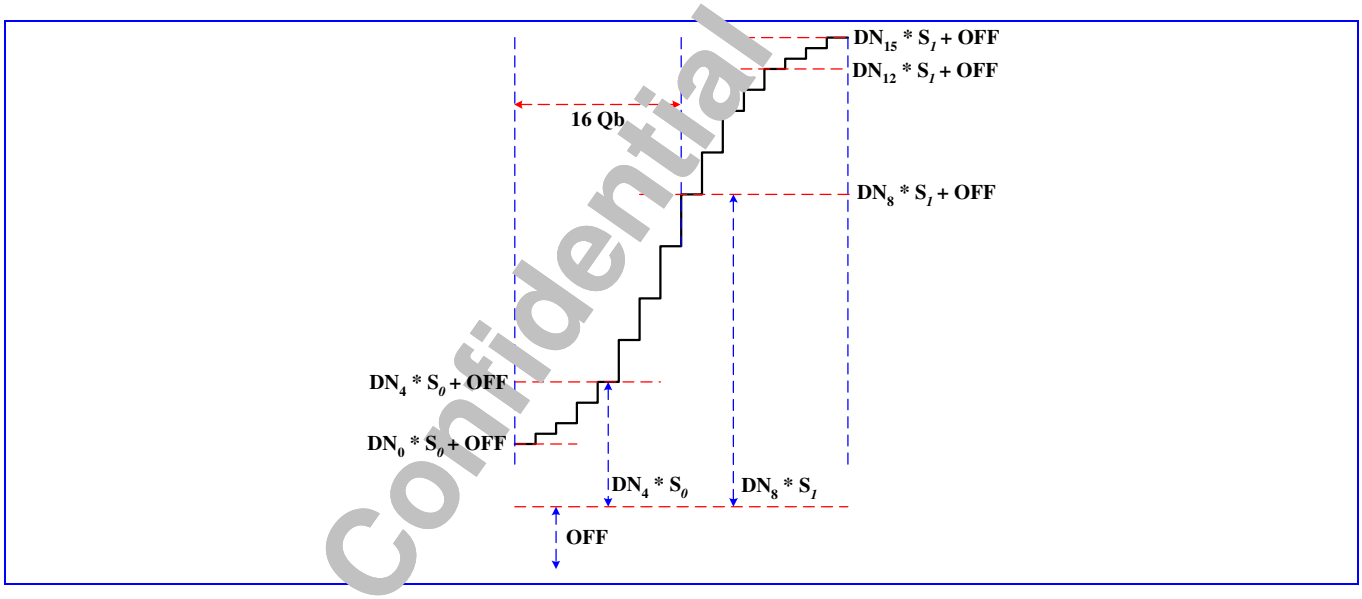

Figure 52 **The timing diagram of the APC ramp.**

The 16 10-bit words are linearly interpolated into 32 10-bit words. A 10-bit D/A converter is then used to convert these 32 ramp values at a rate of 1.0833 MHz, that is, at quarter-bit rate. The timing diagram is shown in **Figure 53** and the final value is retained on the output until the next event occurs.

MTK Confidential Release for Konka

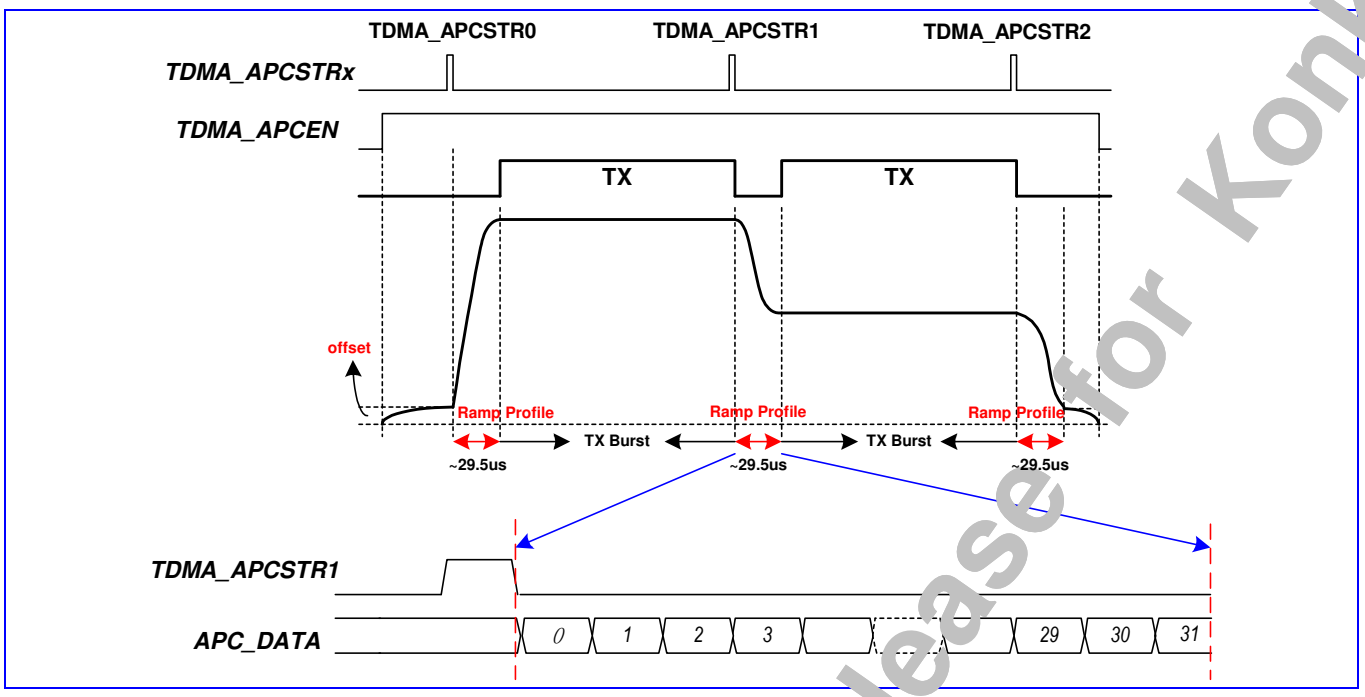

Figure 53 **Timing diagram of the APC ramping.**

The APC unit is only powered up when the APC window is open. The APC window is controlled by configuring the TDMA registers TDMA_BULCON1 and TDMA_BULCON2. Please refer to the TDMA timer unit for more detailed information.

The first offset value stored in the register APC_OFFSET0 also serves as the pedestal value, which is used to provide the initial power level for the PA.

Since the profile is not double-buffered, the timing to write the ramping profile is critical. The programmer must be restricted from writing to the data buffer during the ramping process, otherwise the ramp profile may be incorrect and lead to a malfunction.

8.4 Automatic Frequency Control (AFC) Unit

8.4.1 General Description

The Automatic Frequency Control (AFC) unit provides the direct control of the oscillator for frequency offset and Doppler shift compensation. The block diagram is of the AFC unit depicted in **Figure 54**. The module utilizes a 13-bit D/A converter to achieve high-resolution control. Two modes of operation provide flexibility when controlling the oscillator; they are described as follows.

MTK Confidential Release for Konka

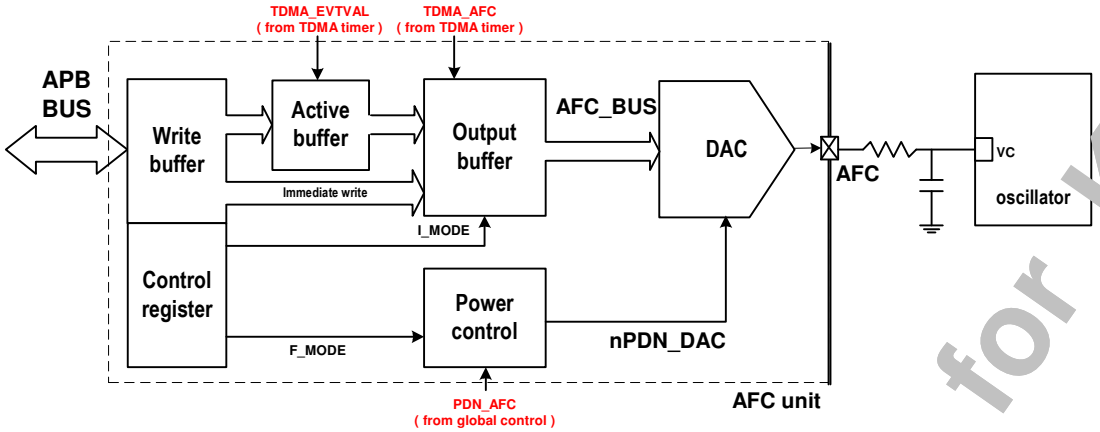

Figure 54 Block Diagram of the AFC Controller

In timer-triggered mode, the TDMA timer controls the AFC enabling events. Each TDMA frame can pulse at most four events. Double buffer architecture is supported. AFC values can be written to the write buffers. When the signal TDMA_EVTVAL is received, the values in the write buffers are latched into the active buffers. However, AFC values can also be written to the active buffers directly. Each event is associated with an active buffer sharing the same index. When a TDMA event is triggered by TDMA_AFC, the value in the corresponding active buffer takes effect. **Figure 55** shows a timing diagram of AFC events with respect to TX/RX/MX windows. In this mode, the D/A converter can stay powered on or be powered on for a programmable duration (256 quarter-bits, by default). The latter option is for power saving.

Figure 55 Timing Diagram for the AFC Controller

In immediate mode, the MCU can directly control the AFC value without event-triggering. The value written by the MCU takes effect immediately. In this mode, the D/A converter must be powered on continuously. When transitioning from immediate mode into timer-triggered mode (by setting flag I_MODE in the register AFC_CON to be 0), the D/A converter is kept powered on for a programmable duration (256 quarter-bits by default) if a TDMA_AFC is not been pulsed. The duration is prolonged upon receiving events.

8.4.2 Register Definitions

AFC+0000h AFC control register AFC_CON

Bit	15	14	13	12	11	10	9	8	7	6	5	4	3	2	1	0
Name													RDACT	F_MODE	FETENV	I_MODE
Type													R/W	R/W	R/W	R/W
Reset													0	0	0	0

Four control modes are defined and can be controlled through the AFC control register.

MTK Confidential Release for Konka

RDACT The flag enables the direct read operation from the active buffer. Note that the control flag is only applicable to the four data buffers AFC_DAT0, AFC_DAT1, AFC_DAT2, and AFC_DAT3.

- **0** APB read from the write buffer.
- **1** APB read from the active buffer.

FETENV The flag enables the direct write operation to the active buffer. Note that the control flag is only applicable to the four data buffers AFC_DAT0, AFC_DAT1, AFC_DAT2, and AFC_DAT3.

- **0** APB write to the write buffer.
- **1** APB write to the active buffer.

F_MODE The flag enables the force power up mode.

- **0** The force power up mode is not enabled.
- **1** The force power up mode is enabled.

I_MODE The flag enables immediate mode. To enable immediate mode, force power up mode must also be enabled.

- **0** Immediate mode is not enabled.
- **1** Immediate mode is enabled.

AFC +0004h AFC data register 0 AFC_DAT0

Bit	15	14	13	12	11	10	9	8	7	6	5	4	3	2	1	0
Name				AFCD												
Type				R/W												

The register stores the AFC value for the event 0 triggered by the TDMA timer in timer-triggered mode. When the RDACT or FETENV bit (of the AFC_CON register) is set, the data transfer operates on the active buffer. When neither flag is set, the data transfer operates on the write buffer.

AFCD The AFC sample for the D/A converter.

Four registers (AFC_DAT0, AFC_DAT1, AFC_DAT2, AFC_DAT3) of the same type correspond to the event triggered by the TDMA timer. The four registers are summarized in **Table 65**.

Register Address	Register Function	Acronym
AFC +0004h	AFC control value 0	AFC_DAT0
AFC +0008h	AFC control value 1	AFC_DAT1
AFC +000Ch	AFC control value 2	AFC_DAT2
AFC +0010h	AFC control value 3	AFC_DAT3

Table 65 AFC Data Registers

Immediate mode can only use AFC_DAT0. In this mode, only the control value in the AFC_DAT0 write buffer is used to control the D/A converter. Unlike timer-triggered mode, the control value in AFC_DAT0 write buffer can bypass the active buffer stage and be directly coupled to the output buffer in immediate mode. To use immediate mode, program the AFC_DAT0 in advance and then enable immediate mode by setting the I_MODE flag in the AFC_CON register.

The registers AFC_DATA0, AFC_DAT1, AFC_DAT2, and AFC_DAT3 have no initial values, thus the register must be programmed before any AFC event takes place. The AFC value for the D/A converter, i.e., the output buffer value, is initially 0 after power up before any event occurs.

MTK Confidential Release for Konka

AFC +0014h AFC power up period AFC_PUPER

Bit	15	14	13	12	11	10	9	8	7	6	5	4	3	2	1	0
Name				PU_PER												
Type				R/W												
Reset				ff												

This register stores the AFC power up period, which is 13 bits wide. The value ranges from 0 to 8191. If the I_MODE or F_MODE flag is set, this register has no effect since the D/A converter is powered up continuously. If neither flag is set, the register controls the power up duration of the D/A converter. During that period, the signal nPDN_DAC in **Figure 54** is set to 1(power up).

PU_PER Stores the AFC power up period. After hardware power up, the field is initialized to 255.

MTK Confidential Release for Korka

9 Baseband Front End

Baseband Front End is a modem interface between TX/RX mixed-signal modules and digital signal processor (DSP). We can divide this block into two parts (see **Figure 56**). The first is the uplink (transmitting) path, which converts bit-stream from DSP into digital in-phase (I) and quadrature (Q) signals for TX mixed-signal module. The second part is the downlink (receiving) path, which receives digital in-phase (I) and quadrature (Q) signals from RX mixed-signal module, performs FIR filtering and then sends results to DSP. **Figure 56** illustrates interconnection around Baseband Front End. In the figure the shadowed blocks compose Baseband Front End. The uplink path is mainly composed of GMSK Modulator and uplink parts of Baseband Serial Ports, and the downlink path is mainly composed of RX digital FIR filter and downlink parts of Baseband Serial Ports. Baseband Serial Ports is a serial interface used to communicate with DSP. In addition, there is a set of control registers in Baseband Front End that is intended for control of TX/RX mixed-signal modules, inclusive of calibration of DC offset and gain mismatch of downlink analog-to-digital (A/D) converters as well as uplink digital-to-analog (D/A) converters in TX/RX mixed-signal modules. The timing of bit streaming through Baseband Front End is completely under control of TDMA timer. Usually only either of uplink and downlink paths is active at one moment. However, both of the uplink and downlink paths will be active simultaneously when Baseband Front End is in loopback mode.

When either of TX windows in TDMA timer is opened, the uplink path in Baseband Front End will be activated. Accordingly components on the uplink path such as GMSK Modulator will be powered on, and then TX mixed-signal module is also powered on. The subblock Baseband Serial Ports will sink TX data bits from DSP and then forward them to GMSK Modulator. The outputs from GMSK Modulator are sent to TX mixed-signal module in format of I/Q signals. Finally D/A conversions are performed in TX mixed-signal module and the output analog signal is output to RF module.

Similarly, while either of RX windows in TDMA timer is opened, the downlink path in Baseband Front End will be activated. Accordingly components on the downlink path such as RX mixed-signal module and RX digital FIR filter are then powered on. First A/D conversions are performed in RX mixed-signal module, and then the results in format of I/Q signals are sourced to RX digital FIR filter. Low-Pass filtering is performed in RX digital FIR filter. Finally the results will be sourced to DSP through Baseband Serial Ports.

MTK Confidential Release for Konka

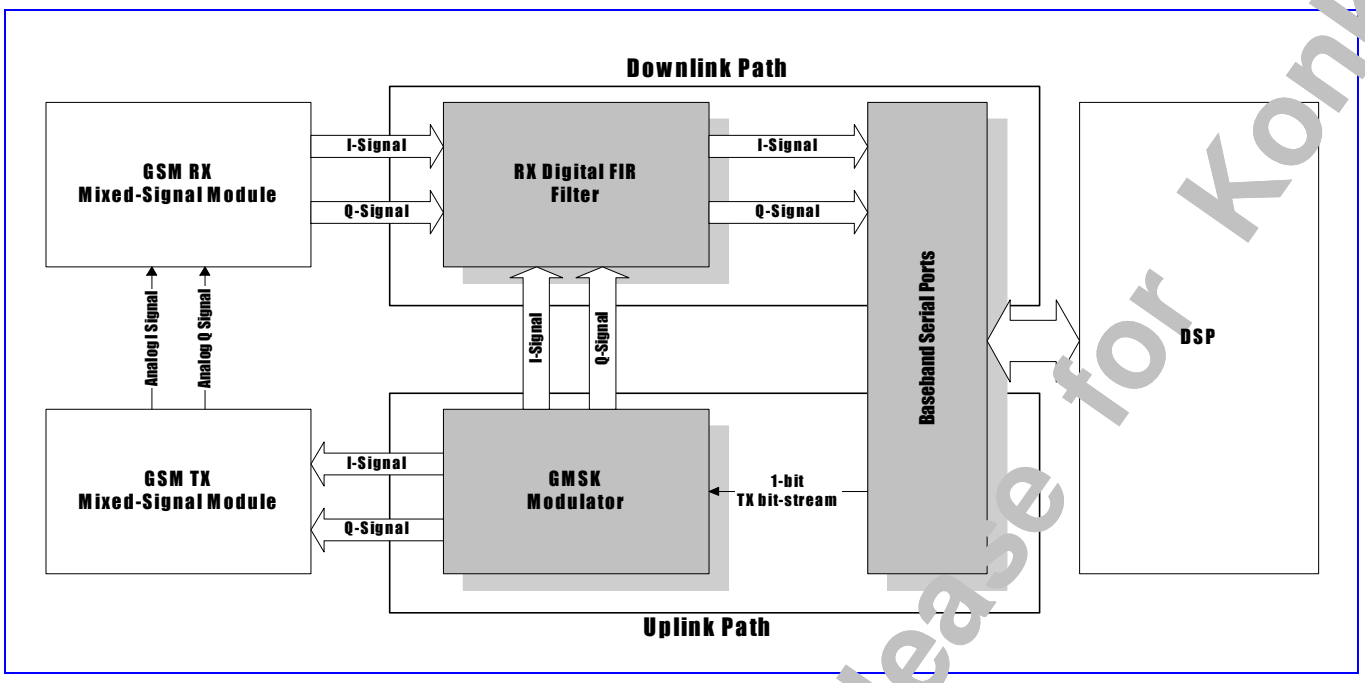

Figure 56 Block Diagram Of Baseband Front End

9.1 Baseband Serial Ports

9.1.1 General Description

Baseband Front End communicates with DSP through the sub block of Baseband Serial Ports. Baseband Serial Ports interfaces with DSP in serial manner. It implies that DSP must be configured carefully in order to have Baseband Serial Ports cooperate with DSP core correctly.

If downlink path is programmed in bypass-filter mode (**NOT** bypass-filter loopback mode), behavior of Baseband Serial Ports will completely be different from that in normal function mode. The special mode is for testing purpose. Please see the subsequent section of Downlink Path for details.

TX and RX windows are under control of TDMA timer. Please refer to functional specification of TDMA timer for the details how to open/close a TX/RX window. Opening/Closing of TX/RX windows has two major effects on Baseband Front End. They are power on/off of corresponding components and data souring/sinking. It is worth noticing that Baseband Serial Ports is only intended for sinking TX data from DSP or sourcing data to DSP. It does not involve power on/off of TX/RX mixed-signal modules.

As far as downlink path is concerned, if a RX window is opened by TDMA timer Baseband Front End will have RX mixed-signal module proceed to make A/D conversion, RX digital filter proceed to perform filtering and Baseband Serial Ports be activated to source data from RX digital filter to DSP no matter the data is meaningful or not. However, the interval between the moment that RX mixed-signal module is powered on and the moment that data proceed to be dumped by Baseband Serial Ports can be well controlled in TDMA timer. Lets denote as RX enable window the interval that RX mixed-signal module is powered on and denote as RX dump window the interval that data is dumped by Baseband Serial Ports. If the first samples from RX digital filter desire to be discarded, the corresponding RX enable window must cover the corresponding RX dump window. Notes that RX dump windows always win over RX enable windows. It means that a RX

MTK Confidential Release for Konka

dump window will always raise a RX enable window. RX enable windows can be raised by TDMA timer or by programming RX power-down bit in global control registers to be '0'. It is useful in debugging environment.

Similarly, a TX dump window refers to the interval that Baseband Serial Ports sinks data from DSP on uplink path and a TX enable window refers to the interval that TX mixed-signal module is powered on. A TX window controlled by TDMA timer involves a TX dump window and a TX enable window simultaneously. The interval between the moment that TX mixed-signal module is powered on and the moment that data proceed to be forwarded from DSP to GMSK modulator by Baseband Serial Ports can be well controlled in TDMA timer. TX dump windows always win over TX enable windows. It means that a TX dump window will always raise a TX enable window. TX enable windows can be raised by TDMA timer or by programming TX power-down bit in global control registers to be '0'. It is useful in debugging environment.

Accordingly, Baseband Serial Ports are only under control of TX/RX dump window. Note that if TX/RX dump window is not integer multiplies of bit-time it will be extended to be integer multiplies of bit-time. For example, if TX/RX dump window has interval of 156.25 bit-times then it will be extended as 157 bit-times in Baseband Serial Ports.

9.1.2 Register Definitions

BFE+0000h Base-band Common Control Register BFE_CON

Bit	15	14	13	12	11	10	9	8	7	6	5	4	3	2	1	0
Name																BCIEN
Type																R/W
Reset																0

This register is for common control of Baseband Front End. It consists of ciphering encryption control.

BCIEN The bit is for ciphering encryption control. If the bit is set to '1', XOR will performed on some TX bits (payload of Normal Burst) and ciphering pattern bit from DSP, and then the result is forwarded to GMSK Modulator. Meanwhile, Baseband Front End will generate signals to drive DSP ciphering process produce corresponding ciphering pattern bits if the bit is set to '1'. If the bit is set to '0', the TX bit from DSP will be forwarded to GMSK modulator directly. Baseband Front End will not activate DSP ciphering process.

- **0** Disable ciphering encryption.
- **1** Enable ciphering encryption.

BFE +0004h Base-band Common Status Register BFE_STA

Bit	15	14	13	12	11	10	9	8	7	6	5	4	3	2	1	0
Name													BULFS	BULEN	BDLFS	BDLEN
Type													RO	RO	RO	RO
Reset													0	0	0	0

This register indicates status of Baseband Front End. Under control of TDMA timer, Baseband Front End can be driven in several statuses. If downlink path is enabled, then the bit BDLEN will be '1'. Otherwise the bit BDLEN will be '0'. If downlink parts of Baseband Serial Ports is enabled, the bit BDLFS will be '1'. Otherwise the bit BDLFS will be '0'. If uplink path is enabled, then the bit BULEN will be '1'. Otherwise the bit BULEN will be 0. If uplink parts of Baseband Serial Ports is enabled, the bit BULFS will be '1'. Otherwise the bit BULFS will be '0'. Once downlink path is enabled, RX mixed-signal module will also be powered on. Similarly, once uplink path is enabled, TX mixed-signal module will also be powered on. Furthermore, enabling Baseband Serial Ports for downlink path refers to dumping results from RX digital FIR filter to DSP. Similarly, enabling Baseband Serial Ports for uplink path refers to forwarding TX bit from DSP to GMSK

MTK Confidential Release for Konka

modulator. BDLEN stands for "**B**aseband **D**own**L**ink **EN**able". BULEN stands for "**B**aseband **U**p**L**ink **EN**able". BDLFS stands for "**B**aseband **D**own**L**ink **F**rame**S**ync". BULFS stands for "**B**aseband **U**pLink **F**rame**S**ync".

BDLEN Indicate if downlink path is enabled.

- **0** Disabled
- **1** Enabled

BDLFS Indicate if Baseband Serial Ports for downlink path is enabled.

- **0** Disabled
- **1** Enabled

BULEN Indicate if uplink path is enabled.

- **0** Disabled
- **1** Enabled

BULFS Indicate if Baseband Serial Ports for uplink path is enabled.

- **0** Disabled
- **1** Enabled

9.2 Downlink Path (RX Path)

9.2.1 General Description

On downlink path, the subblock between RX mixed-signal module and Baseband Serial Ports is RX Path. It mainly consists of a digital FIR filter, two sets of multiplexing paths for loopback modes, interface for RX mixed-signal module and interface for Baseband Serial Ports. The block diagram is shown in **Figure 57**.

While RX enable windows are opened, RX Path will issue control signals to have RX mixed-signal module proceed to make A/D conversion. As each conversion is finished, one set of I/Q signals will be latched. There exists a digital FIR filter for these I/Q signals. The result of filtering will be dumped to Baseband Serial Ports whenever RX dump windows are opened.

In addition to normal function, there are two loopback modes in RX Path. One is bypass-filter loopback mode, and the other is through-filter loopback mode. They are intended for verification of DSP firmware and hardware. The bypass-filter loopback mode refers to that RX digital FIR filter is not on the loopback path. However, the through-filter loopback mode refers to that RX digital FIR filter is on the loopback path.

The I/Q swap functionality is used to swap I/Q channel signals from RX mixed-signal module before they are latched into RX digital FIR filter. It is intended to provide flexibility for I/Q connection with RF modules.

There is a special data path not shown in **Figure 57**. It is a data path from RX mixed-signal module to Baseband Serial Ports. If downlink path is programmed in "Bypass RX digital FIR filter" mode, ADC outputs out of RX mixed-signal module will be directed into Baseband Serial Ports directly. Therefore these data can be dumped into DSP and RX FIR filtering will not be performed on them. Limited by bandwidth of the serial interface between Baseband Serial Ports and DSP, only ADC outputs which are from either I-channel or Q-channel ADC can be dumped into DSP. Both of I- and Q-channel ADC outputs cannot be dumped simultaneously. Which channel will be dumped is controlled by the register bit SWAP of the register **RX_CFG** when downlink path is programmed in "Bypass RX digital FIR filter" mode. See register definition below for details. The mode is for measurement of performance of A/D converters in RX mixed-signal module.

MTK Confidential Release for Konka

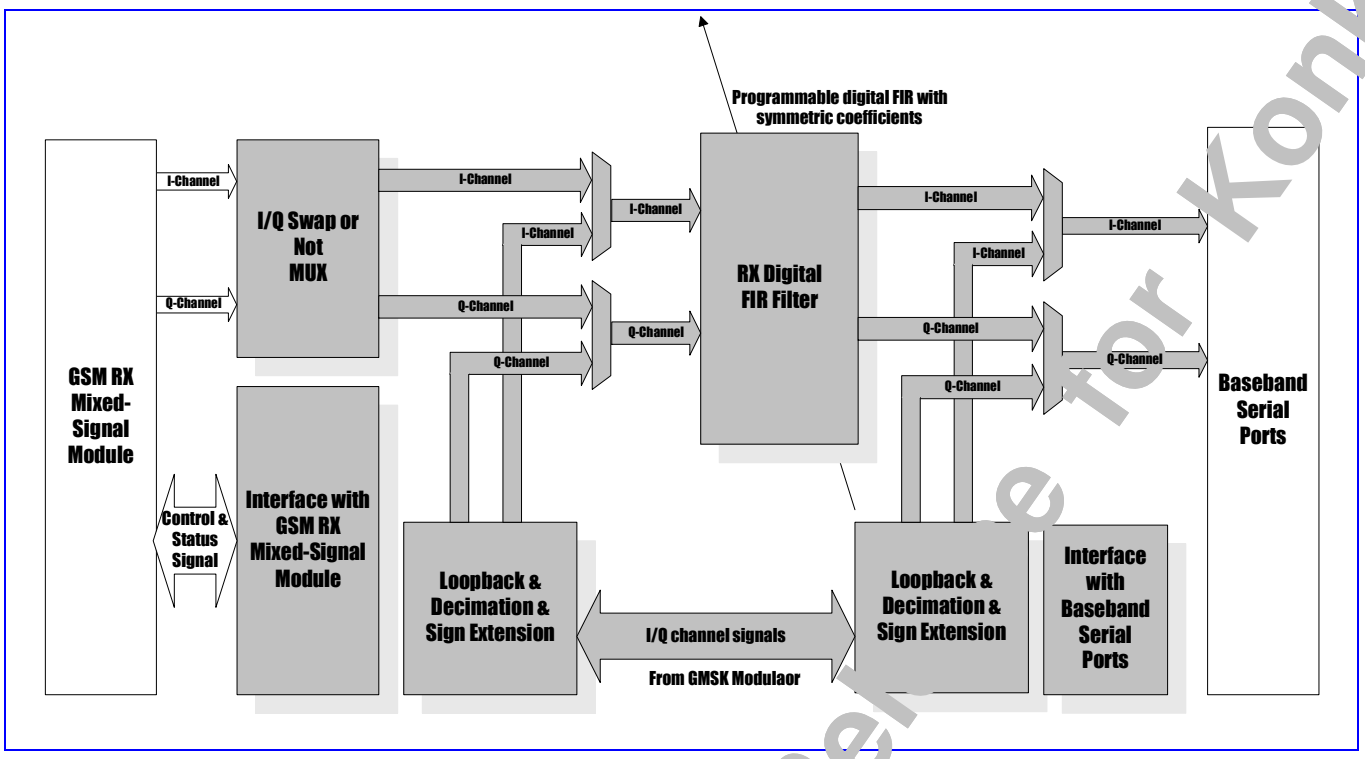

Figure 57 Block Diagram Of RX Path

9.2.2 Register Definitions

BFE +0010h RX Configuration Register RX_CFG

Bit	15	14	13	12	11	10	9	8	7	6	5	4	3	2	1	0
Name	LPDN														BYPFLTR	SWAP
Type	R/W														R/W	R/W
Reset	0000														0	0

This register is for configuration of downlink path, inclusive of configuration of RX mixed-signal module and RX path in Baseband Front End.

SWAP The register bit is for control of whether I/Q channel signals need swap before they are input to Baseband Front End. It provides flexibility of connection of I/Q channel signals between RF module and baseband module. The register bit has another purpose when the register bit "BYPFLTR" is set to 1. Please see description for the register bit "BYPFLTR".

0 I- and Q-channel signals are not swapped

1 I- and Q-channel signals are swapped

BYPFLTR Bypass RX FIR filter control. The register bit is used to configure Baseband Front End in the state called "Bypass RX FIR filter state" or not. Once the bit is set to '1', RX FIR filter will be bypassed. That is, ADC outputs of RX mixed-signal module that are 11-bit resolution and at sampling rate of 1.083MHz can be dumped into DSP by Baseband Serial Ports and RX FIR filtering will not be performed on them. Limited by bandwidth of the serial interface between Baseband Serial Ports and DSP, these ADC outputs are all from either I-channel or Q-channel ADC. Both of I- and Q-channel ADC outputs cannot be dumped simultaneously. When the bit is set to '1' and the

MTK Confidential Release for Konka

register bit "SWAP" is set to '0', ADC outputs of I-channel will be dumped. When the bit is set to '1' and the register bit "SWAP" is set to '1', ADC outputs of Q-channel will be dumped.

0 Not bypass RX FIR filter

1 Bypass RX FIR filter

LPDN Late power down control. RX mixed-signal module needs two power down signals. There must exist some delay between them. The register field is used to control the late-arriving power-down signal.

0000 The delay between two power-down signals is one 13 MHz period.

0001 The delay between two power-down signals is two 13 MHz period.

0010 The delay between two power-down signals is three 13 MHz period.

…

0001 The delay between two power-down signals is 256 13 MHz period.

BFE +0014h RX Control Register RX_CON

Bit	15	14	13	12	11	10	9	8	7	6	5	4	3	2	1	0
Name															BLPEN[1:0]	
Type															R/W	
Reset															0	

This register is for control of downlink path, inclusive of control of RX mixed-signal module and RX path in Baseband Front End module.

BLPEN The register field is for loopback configuration selection in Baseband Front End.

00 Configure Baseband Front End in normal function mode

01 Configure Baseband Front End in bypass-filter loopback mode

10 Configure Baseband Front End in through-filter loopback mode

11 Reserved

BFE +0020h RX Digital FIR Filter Coefficient Register 0 RX_FIR_COEF0

Bit	15	14	13	12	11	10	9	8	7	6	5	4	3	2	1	0
Name							D9	D8	D7	D6	D5	D4	D3	D2	D1	D0
Type							R/W	R/W	R/W	R/W	R/W	R/W	R/W	R/W	R/W	R/W
Reset							0	0	0	0	0	0	0	0	0	0

The register is for RX digital FIR filter coefficient 0. It is coded in 2's complement. That is, its maximum is 255 and its minimum is –256. It will be applied on the latest and the oldest taps of 31 taps. The equivalent process flow of RX digital FIR filtering is shown in **Figure 58**.

MTK Confidential Release for Konka

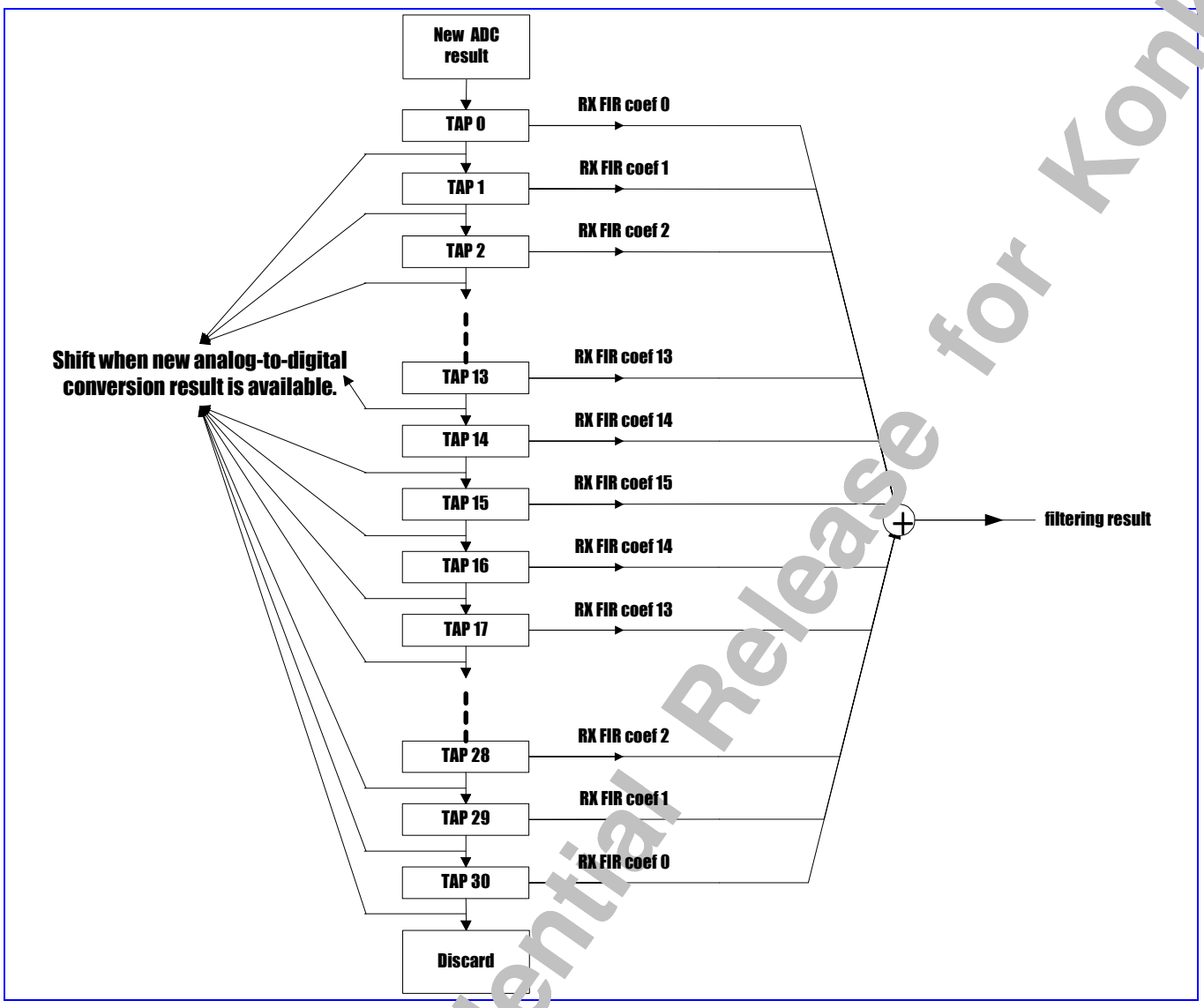

Figure 58 Equivalent Process Flow Of RX Digital FIR Filtering

BFE +0024h RX Digital FIR Filter Coefficient Register 1 RX_FIR_COEF1

Bit	15	14	13	12	11	10	9	8	7	6	5	4	3	2	1	0
Name							D9	D8	D7	D6	D5	D4	D3	D2	D1	D0
Type							R/W	R/W	R/W	R/W	R/W	R/W	R/W	R/W	R/W	R/W
Reset							0	0	0	0	0	0	0	0	0	0

The register is for RX digital FIR filter coefficient 1. It is coded in 2's complement. That is, its maximum is 255 and its minimum is –256.

BFE +0028h RX Digital FIR Filter Coefficient Register 2 RX_FIR_COEF2

Bit	15	14	13	12	11	10	9	8	7	6	5	4	3	2	1	0
Name							D9	D8	D7	D6	D5	D4	D3	D2	D1	D0
Type							R/W	R/W	R/W	R/W	R/W	R/W	R/W	R/W	R/W	R/W
Reset							0	0	0	0	0	0	0	0	0	0

MTK Confidential Release for Konka

The register is for RX digital FIR filter coefficient 2. It is coded in 2's complement. That is, its maximum is 255 and its minimum is –256.

BFE +002Ch RX Digital FIR Filter Coefficient Register 3 RX_FIR_COEF3

Bit	15	14	13	12	11	10	9	8	7	6	5	4	3	2	1	0
Name							D9	D8	D7	D6	D5	D4	D3	D2	D1	D0
Type							R/W	R/W	R/W	R/W	R/W	R/W	R/W	R/W	R/W	R/W
Reset							0	0	0	0	0	0	0	0	0	0

The register is for RX digital FIR filter coefficient 3. It is coded in 2's complement. That is, its maximum is 255 and its minimum is –256.

BFE +0030h RX Digital FIR Filter Coefficient Register 4 RX_FIR_COEF4

Bit	15	14	13	12	11	10	9	8	7	6	5	4	3	2	1	0
Name							D9	D8	D7	D6	D5	D4	D3	D2	D1	D0
Type							R/W	R/W	R/W	R/W	R/W	R/W	R/W	R/W	R/W	R/W
Reset							0	0	0	0	0	0	0	0	0	0

The register is for RX FIR filter coefficient 4. It is coded in 2's complement. That is, its maximum is 255 and its minimum is –256.

BFE +0034h RX Digital FIR Filter Coefficient Register 5 RX_FIR_COEF5

Bit	15	14	13	12	11	10	9	8	7	6	5	4	3	2	1	0
Name							D9	D8	D7	D6	D5	D4	D3	D2	D1	D0
Type							R/W	R/W	R/W	R/W	R/W	R/W	R/W	R/W	R/W	R/W
Reset							0	0	0	0	0	0	0	0	0	0

The register is for RX digital FIR filter coefficient 5. It is coded in 2's complement. That is, its maximum is 255 and its minimum is –256.

BFE +0038h RX Digital FIR Filter Coefficient Register 6 RX_FIR_COEF6

Bit	15	14	13	12	11	10	9	8	7	6	5	4	3	2	1	0
Name							D9	D8	D7	D6	D5	D4	D3	D2	D1	D0
Type							R/W	R/W	R/W	R/W	R/W	R/W	R/W	R/W	R/W	R/W
Reset							0	0	0	0	0	0	0	0	0	0

The register is for RX digital FIR filter coefficient 6. It is coded in 2's complement. That is, its maximum is 255 and its minimum is –256.

BFE +003Ch RX Digital FIR Filter Coefficient Register 7 RX_FIR_COEF7

Bit	15	14	13	12	11	10	9	8	7	6	5	4	3	2	1	0
Name							D9	D8	D7	D6	D5	D4	D3	D2	D1	D0
Type							R/W	R/W	R/W	R/W	R/W	R/W	R/W	R/W	R/W	R/W
Reset							0	0	0	0	0	0	0	0	0	0

The register is for RX digital FIR filter coefficient 7. It is coded in 2's complement. That is, its maximum is 255 and its minimum is –256.

BFE +0040h RX Digital FIR Filter Coefficient Register 8 RX_FIR_COEF8

Bit	15	14	13	12	11	10	9	8	7	6	5	4	3	2	1	0
Name							D9	D8	D7	D6	D5	D4	D3	D2	D1	D0

MTK Confidential Release for Konka

Type							R/W	R/W	R/W	R/W	R/W	R/W	R/W	R/W	R/W	R/W
Reset							0	0	0	0	0	0	0	0	0	0

The register is for RX digital FIR filter coefficient 8. It is coded in 2's complement. That is, its maximum is 255 and its minimum is –256.

BFE +0044h RX Digital FIR Filter Coefficient Register 9 RX_FIR_COEF9

Bit	15	14	13	12	11	10	9	8	7	6	5	4	3	2	1	0
Name							**D9**	**D8**	**D7**	**D6**	**D5**	**D4**	**D3**	**D2**	**D1**	**D0**
Type							R/W	R/W	R/W	R/W	R/W	R/W	R/W	R/W	R/W	R/W
Reset							0	0	0	0	0	0	0	0	0	0

The register is for RX digital FIR filter coefficient 9. It is coded in 2's complement. That is, its maximum is 255 and its minimum is –256.

BFE +0048h RX Digital FIR Filter Coefficient Register 10 RX_FIR_COEF10

Bit	15	14	13	12	11	10	9	8	7	6	5	4	3	2	1	0
Name							**D9**	**D8**	**D7**	**D6**	**D5**	**D4**	**D3**	**D2**	**D1**	**D0**
Type							R/W	R/W	R/W	R/W	R/W	R/W	R/W	R/W	R/W	R/W
Reset							0	0	0	0	0	0	0	0	0	0

The register is for RX digital FIR filter coefficient 10. It is coded in 2's complement. That is, its maximum is 255 and its minimum is –256.

BFE +004Ch RX Digital FIR Filter Coefficient Register 11 RX_FIR_COEF11

Bit	15	14	13	12	11	10	9	8	7	6	5	4	3	2	1	0
Name							**D9**	**D8**	**D7**	**D6**	**D5**	**D4**	**D3**	**D2**	**D1**	**D0**
Type							R/W	R/W	R/W	R/W	R/W	R/W	R/W	R/W	R/W	R/W
Reset							0	0	0	0	0	0	0	0	0	0

The register is for RX digital FIR filter coefficient 11. It is coded in 2's complement. That is, its maximum is 255 and its minimum is –256.

BFE +0050h RX Digital FIR Filter Coefficient Register 12 RX_FIR_COEF12

Bit	15	14	13	12	11	10	9	8	7	6	5	4	3	2	1	0
Name							**D9**	**D8**	**D7**	**D6**	**D5**	**D4**	**D3**	**D2**	**D1**	**D0**
Type							R/W	R/W	R/W	R/W	R/W	R/W	R/W	R/W	R/W	R/W
Reset							0	0	0	0	0	0	0	0	0	0

The register is for RX digital FIR filter coefficient 12. It is coded in 2's complement. That is, its maximum is 255 and its minimum is –256.

BFE +0054h RX Digital FIR Filter Coefficient Register 13 RX_FIR_COEF13

Bit	15	14	13	12	11	10	9	8	7	6	5	4	3	2	1	0
Name							**D9**	**D8**	**D7**	**D6**	**D5**	**D4**	**D3**	**D2**	**D1**	**D0**
Type							R/W	R/W	R/W	R/W	R/W	R/W	R/W	R/W	R/W	R/W
Reset							0	0	0	0	0	0	0	0	0	0

MTK Confidential Release for Konka

The register is for RX digital FIR filter coefficient 13. It is coded in 2's complement. That is, its maximum is 255 and its minimum is –256.

BFE +0058h RX Digital FIR Filter Coefficient Register 14 RX_FIR_COEF14

Bit	15	14	13	12	11	10	9	8	7	6	5	4	3	2	1	0
Name							D9	D8	D7	D6	D5	D4	D3	D2	D1	D0
Type							R/W	R/W	R/W	R/W	R/W	R/W	R/W	R/W	R/W	R/W
Reset							0	0	0	0	0	0	0	0	0	0

The register is for RX digital FIR filter coefficient 14. It is coded in 2's complement. That is, its maximum is 255 and its minimum is –256.

BFE +005Ch RX Digital FIR Filter Coefficient Register 15 RX_FIR_COEF15

Bit	15	14	13	12	11	10	9	8	7	6	5	4	3	2	1	0
Name							D9	D8	D7	D6	D5	D4	D3	D2	D1	D0
Type							R/W	R/W	R/W	R/W	R/W	R/W	R/W	R/W	R/W	R/W
Reset							0	0	0	0	0	0	0	0	0	0

The register is for RX digital FIR filter coefficient 15. It is coded in 2's complement. That is, its maximum is 255 and its minimum is –256.

9.3 Uplink Path (TX Path)

9.3.1 General Description

The purpose of the uplink path inside Baseband Front End is to sink TX symbols, one bit for each symbol, from DSP, then perform GMSK modulation on them, then perform offset cancellation on I/Q digital signals out of GMSK modulator, and finally control TX mixed-signal module to make D/A conversion on I/Q signals out of GMSK Modulator with offset cancellation. Accordingly, the uplink path is composed of uplink parts of Baseband Serial Ports, GSM Encryptor, GMSK Modulator and Offset Cancellation. The block diagram of uplink path is shown in **Figure 59**. On uplink path, the content of a burst, including tail bits, data bits, and training sequence bits is sent from DSP. Translated by GMSK Modulator, these bits will become I/Q digital signals. Offset cancellation will be performed on these I/Q digital signals to compensate offset error of D/A converters (DAC) in TX mixed-signal module. Finally the generated I/Q digital signals will be input to TX mixed-signal module that contains two DAC for I/Q signal respectively. The details of each subblock will be described in subsequent sections.

MTK Confidential Release for Konka

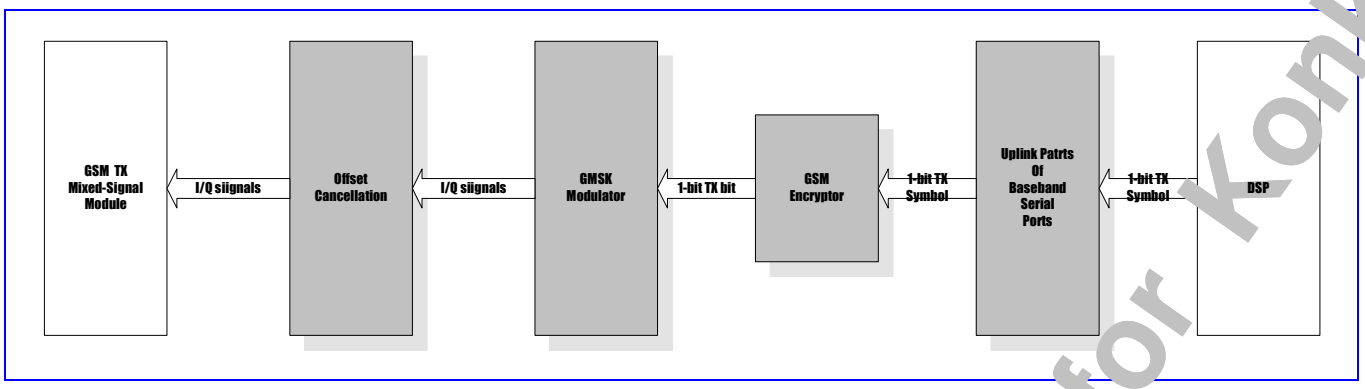

Figure 59 Block Diagram Of Uplink Path

TDMA timer having a quarter-bit timing accuracy gives the timing windows for uplink operation. Uplink operation is controlled by TX enable window and TX dump window of TDMA timer. Usually TX enable window is opened earlier than TX dump window. When TX enable window of TDMA timer is opened, uplink path in Baseband Front End will power on GSK TX mixed-signal module and thus has it drive valid outputs to RF module. However, uplink parts of Baseband Serial Ports still don't sink data from DSP through the serial interface between Baseband Serial Ports and DSP until now. Uplink parts of Baseband Serial Ports will not sink data from DSP until TX dump window of TDMA timer is opened.

9.3.2 Register Definitions

BFE +0060h TX Configuration Register TX_CFG

Bit	15	14	13	12	11	10	9	8	7	6	5	4	3	2	1	0
Name																APNDEN
Type																R/W
Reset																0

This register is for configuration of uplink path, inclusive of configuration of TX mixed-signal module and TX path in Baseband Front End.

APNDEN Appending Bits Enable. The register bit is used to control the ending scheme of GMSK modulation.

0 Suitable for GPRS. If a TX enable window contains several TX dump window, then GMSK modulator will still output in the intervals between two TX dump window and all 1's will be fed into GMSK modulator. **Note that when the bit is set to '0', the interval between the moment at which TX enable window is activated and the moment at which TX dump window is activated must be multiples of one bit time.**

1 Suitable for GSM only. After a TX dump window, GMSK modulator will only output for some bit time.

BFE +0064h TX Control Register TX_CON

Bit	15	14	13	12	11	10	9	8	7	6	5	4	3	2	1	0
Name															CALRCEN	IQSWP
Type															R/W	R/W
Reset															0	0

This register is for control of uplink path, inclusive of control of TX mixed-signal module and TX path in Baseband Front End.

MTK Confidential Release for Konka

CALRCEN Calibration for TX low-pass-filter Enable. The procedure to make calibration processing for smoothing filter in BBTX mixed-signal module is as follows:

1. Write '1' to the register bit CARLC in the register TX_CON of Baseband Front End in order to activate clock required for calibration process. Initiate calibration process.
2. Write '1' to the register bit STARTCALRC of Analog Chip Interface. Start calibration process.
3. Read the register bit CALRCDONE of Analog Chip Interface. If read as '1', then calibration process finished. Otherwise repeat the step.
4. Write '0' to the register bit STARTCALRC of Analog Chip Interface. Stop calibration process.
5. Write '0' to the register bit CARLC in the register TX_CON of Baseband Front End in order to deactivate clock required for calibration process. Terminate calibration process.
6. The result of calibration process can be read from the register field CALRCOUT of the register BBTX_AC_CON1 of Analog Chip Interface. Software can set the value to the register field CALRCSEL for 3-dB cutoff frequency selection of smoothing filter in DAC of BBTX of Analog Chip Interface.

0 Dectivate clock required for calibration process.
1 Activate clock required for calibration process.

IQSWP The register bit is for control of I/Q swapping. When the bit is set to '1', phase on I/Q plane will rotate in inverse direction.
0: I and Q are not swapped.
1: I and Q are swapped.

BFE +0068h TX I/Q Channel Offset Compensation Register TX_OFF

Bit	15	14	13	12	11	10	9	8	7	6	5	4	3	2	1	0
Name			OFFQ[5:0]								OFFI[5:0]					
Type			R/W								R/W					
Reset			000000								000000					

The register is for offset cancellation of I-channel DAC in TX mixed-signal module. It is for compensation of offset error caused by I/Q-channel DAC in TX mixed-signal module. It is coded in 2's complement, that is, with maximum 31 and minimum –32.

OFFI Value of offset cancellation for I-channel DAC in TX mixed-signal module
OFFQ Value of offset cancellation for Q-channel DAC in TX mixed-signal module

MTK Confidential Release for Konka

10 Timing Generator

Timing is the most critical issue in GSM/GPRS applications. The TDMA timer provides a simple interface for the MCU to program all the timing-related events for receive event control, transmit event control, and timing adjustment. Detailed descriptions are mentioned in Section 10.1.

In pause mode, the 13MHz reference clock may be switched off temporarily for the purpose of power saving and the synchronization to the base-station is maintained by using a low power 32KHz crystal oscillator. The 32KHz oscillator is not accurate and therefore it should be calibrated prior to entering pause mode. The calibration sequence, pause begin sequence and the wake up sequence are described in Section 10.2.

10.1 TDMA timer

The TDMA timer unit is composed of three major blocks: Quarter bit counter, Signal generator and Event registers.

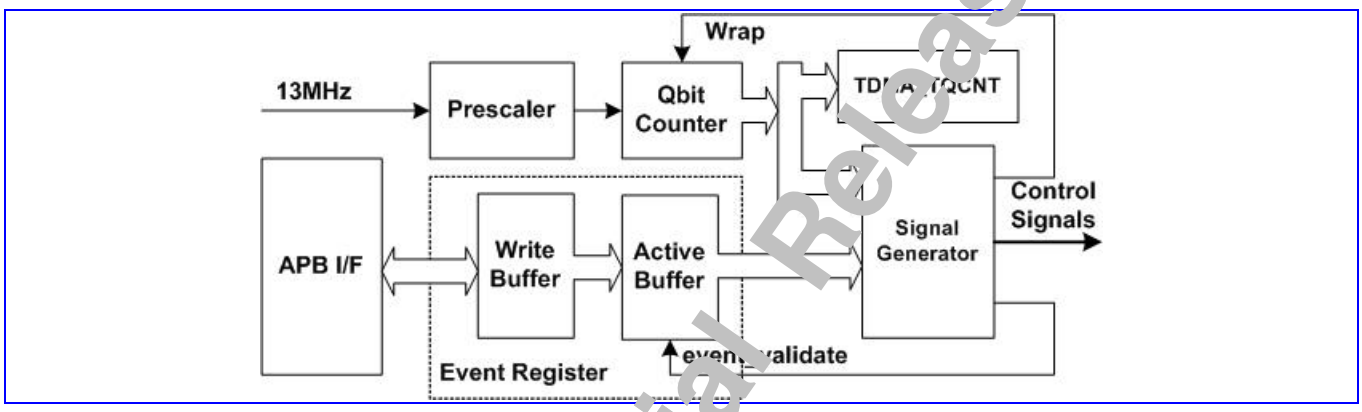

Figure 60 The block diagram of TDMA timer

By default, the quarter-bit counter continuously counts from 0 to the wrap position. In order to apply to cell synchronization and neighboring cell monitoring, the wrap position can be changed by the MCU to shorten or lengthen a TDMA frame. The wrap position is held in the TDMA_WRAP register and the current value of the TDMA quarter bit counter may be read by the MCU via the TDMA_TQCNT register.

The signal generator handles the overall comparing and event-generating processes. When a match has occurred between the quarter bit counter and the event register, a predefined control signal is generated. These control signals may be used for on-chip and off-chip purposes. Signals that change state more than once per frame make use of more than one event register.

The event registers are programmed to contain the quarter bit position of the event that is to occur. The event registers are double buffered. The MCU writes into the first register, and the event TDMA_EVTVAL transfers the data from the write buffer to the active buffer, which is used by the signal generator for comparison with the quarter bit count. The TDMA_EVTVAL signal itself may be programmed at any quarter bit position. These event registers could be classified into four groups:

On-chip Control Events

TDMA_EVTVAL

MTK Confidential Release for Konka

This event allows the data values written by the MCU to pass through to the active buffers.

TDMA_WRAP

TDMA quarter bit counter wrap position. This sets the position at which the TDMA quarter bit counter resets back to zero. The default value is 4999, changing this value will advance or retard the timing events in the frame following the next TDMA_EVTVAL signal.

TDMA_DTIRQ

DSP TDMA interrupt requests. DTIRQ triggers the DSP to read the command from the MCU/DSP Shard RAM to schedule the activities that will be executed in the current frame.

TDMA_CTIRQ1/CTIRQ2

MCU TDMA interrupt requests.

TDMA_AUXADC [1:0]

This signal triggers the monitoring ADC to measure the voltage, current, temperature, device id etc..

TDMA_AFC [3:0]

This signal powers up the automatic frequency control DAC for a programmed duration after this event.

Note: For both MCU and DSP TDMA interrupt requests, these signals are all active Low during one quarter bit duration and they should be used as edge sensitive events by the respective interrupt controllers.

On-chip Receive Events

TDMA_BDLON [5:0]

These registers are a set of six which contain the quarter bit event that initiates the receive window assertion sequence which powers up and enables the receive ADC, and then enables loading of the receive data into the receive buffer.

TDMA_BDLOFF [5:0]

These registers are a set of six which contain the quarter bit event that initiates the receive window de-assertion sequence which disables loading of the receive data into the receive buffer, and then powers down the receive ADC.

TDMA_RXWIN[5:0]

DSP TDMA interrupt requests. TDMA_RXWIN is usually used to initiate the related RX processing including two modes. In single-shot mode, TDMA_RXWIN is generated when the BRXFS signal is de-asserted. In repetitive mode, TDMA_RXWIN will be generated both regularly with a specific interval after BRXFS signal is asserted and when the BRXFS signal is de-asserted.

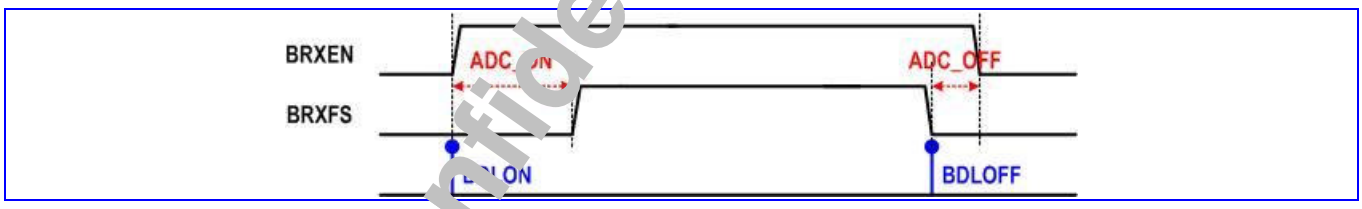

Figure 61 The timing diagram of BRXEN and BRXFS

Note: TDMA_BDLON/OFF event registers, together with TDMA_BDLCON register, generate the corresponding BRXEN and BRXFS window used to power up/down baseband downlink path and control the duration of data transmission to the DSP, respectively.

On-chip Transmit Events

TDMA_APC [6:0]

These registers initiate the loading of the transmit burst shaping values from the transmit burst shaping RAM into the transmit power control DAC.

TDMA_BULON [3:0]

MTK Confidential Release for Konka

This register contains the quarter bit event that initiates the transmit window assertion sequence which powers up the modulator DAC and then enables reading of bits from the transmit buffer into the GMSK modulator.

TDMA_BULOFF [3:0]

This register contains the quarter bit event that initiates the transmit window de-assertion sequence which disables the reading of bits from the transmit buffer into the GMSK modulator, and then power down the modulator DAC.

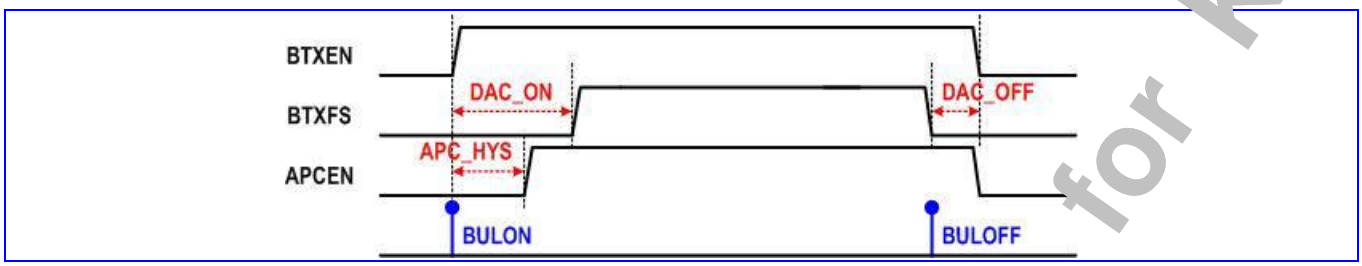

Figure 62 The timing diagram of BTXEN and BTXFS

Note: TDMA_BULON/OFF event registers, together with TDMA_BULCON1, TDMA_BULCON2 register, generate the corresponding BTXEN, BTXFS and APCEN window used to power up/down the baseband uplink path, control the duration of data transmission from the DSP and power up/down the APC DAC, respectively.

Off-chip Control Events

TDMA_BSI [15:0]

The quarter bit positions of these 16 BSI events are used to initiate the transfer of serial words to the transceiver and synthesizer for gain control and frequency adjustment.

TDMA_BPI [21:0]

The quarter bit positions of these 22 BPI events are used to generate changes of state on the output pins to control the external radio components.

10.1.1 Register Definitions

TDMA+0150h Event Enable Register 0 — TDMA_EVTENA 0

Bit	15	14	13	12	11	10	9	8	7	6	5	4	3	2	1	0
Name	AFC3	AFC2	AFC1	AFC0	BDL5	BDL4	BDL3	BDL2	BDL1	BDL0				CTIRQ2	CTIRQ1	DTIRQ
Type	R/W	R/W	R/W	R/W	R/W	R/W	R/W	R/W	R/W	R/W				R/W	R/W	R/W
Reset	0	0	0	0	0	0	0	0	0	0				0	0	0

DTIRQ Enable TDMA_DTIRQ

CTIRQ*n* Enable TDMA_CTIRQ*n*

AFC*n* Enable TDMA_AFC*n*

BDL*n* Enable TDMA_BDLON*n* and TDMA_BDLOFF*n*

For all these bits,

0 function is disabled

1 function is enabled

TDMA+0154h Event Enable Register 1 — TDMA_EVTENA 1

Bit	15	14	13	12	11	10	9	8	7	6	5	4	3	2	1	0

MTK Confidential Release for Konka

Name	GPRS				BUL3	BUL2	BUL1	BUL0		APC6	APC5	APC4	APC3	APC2	APC1	APC0
Type	R/W				R/W	R/W	R/W	R/W		R/W	R/W	R/W	R/W	R/W	R/W	R/W
Reset	0				0	0	0	0		0	0	0	0	0	0	0

APC*n* Enable TDMA_APC*n*

BUL*n* Enable TDMA_BULON*n* and TDMA_BULOFF*n*

For all these bits,

0 function is disabled

1 function is enabled

TDMA +0158h Event Enable Register 2

TDMA_EVTENA 2

Bit	15	14	13	12	11	10	9	8	7	6	5	4	3	2	1	0
Name	BSI15	BSI14	BSI13	BSI12	BSI11	BSI10	BSI9	BSI8	BSI7	BSI6	BSI5	BSI4	BSI3	BSI2	BSI1	BSI0
Type	R/W	R/W	R/W	R/W	R/W	R/W	R/W	R/W	R/W	R/W	R/W	R/W	R/W	R/W	R/W	R/W
Reset	0	0	0	0	0	0	0	0	0	0	0	0	0	0	0	0

BSI*n* BSI event enable control

0 Disable TDMA_BSI*n*

1 Enable TDMA_BSI*n*

TDMA +015Ch Event Enable Register 3

TDMA_EVTENA 3

Bit	15	14	13	12	11	10	9	8	7	6	5	4	3	2	1	0
Name	BPI15	BPI14	BPI13	BPI12	BPI11	BPI10	BPI9	BPI8	BPI7	BPI6	BPI5	BPI4	BPI3	BPI2	BPI1	BPI0
Type	R/W	R/W	R/W	R/W	R/W	R/W	R/W	R/W	R/W	R/W	R/W	R/W	R/W	R/W	R/W	R/W
Reset	0	0	0	0	0	0	0	0	0	0	0	0	0	0	0	0

TDMA+0160h Event Enable Register 4

TDMA_EVTENA 4

Bit	15	14	13	12	11	10	9	8	7	6	5	4	3	2	1	0
Name											BPI21	BPI20	BPI19	BPI18	BPI17	BPI16
Type											R/W	R/W	R/W	R/W	R/W	R/W
Reset											0	0	0	0	0	0

BPI*n* BPI event enable control

0 Disable TDMA_BPI*n*

1 Enable TDMA_BPI*n*

TDMA+0164h Event Enable Register 5

TDMA_EVTENA 5

Bit	15	14	13	12	11	10	9	8	7	6	5	4	3	2	1	0
Name															AUX1	AUX0
Type															R/W	R/W
Reset															0	0

AUX Auxiliary ADC event enable control

0 Disable Auxiliary ADC event

1 Enable Auxiliary ADC event

MTK Confidential Release for Koika

TDMA +0170h Qbit Timer Offset Control Register TDMA_WRAPOFS

Bit	15	14	13	12	11	10	9	8	7	6	5	4	3	2	1	0
Name															TOI[1:0]	
Type															R/W	
Reset															0	

TOI This register defines the value used to advance the Qbit timer in unit of 1/4 quarter bit; the timing advance will be take place as soon as the TDMA_EVTVAL is occurred, and it will be cleared automatically.

TDMA +0174h Qbit Timer Biasing Control Register TDMA_REGBIAS

Bit	15	14	13	12	11	10	9	8	7	6	5	4	3	2	1	0
Name			TQ_BIAS[13:0]													
Type			R/W													
Reset			0													

TQ_BIAS This register defines the Qbit offset value which will be added to the registers being programmed. It only takes effects on AFC, BDLON/OFF, BULON/OFF, APC, AUXADC, BSI and BPI event registers.

TDMA +0180h DTX Control Register TDMA_DTXCON

Bit	15	14	13	12	11	10	9	8	7	6	5	4	3	2	1	0
Name													DTX3	DTX2	DTX1	DTX0
Type													R/W	R/W	R/W	R/W

DTX DTX flag is used to disable the associated transmit signals

- **0** BULON0, BULOFF0, APC_EV0 & APC_EV1 are controlled by TDMA_EVTENA1 register
- **1** BULON0, BULOFF0, APC_EV0 & APC_EV1 are disabled

TDMA +0184h Receive Interrupt Control Register TDMA_RXCON

Bit	15	14	13	12	11	10	9	8	7	6	5	4	3	2	1	0
Name	MOD5	MOD4	MOD3	MOD2	MOD1	MOD0	RXINTCNT[9:0]									
Type	R/W	R/W	R/W	R/W	R/W	R/W	R/W									

RXINTCNT TDMA_RXWIN interrupt generation interval in quarter bit unit

MOD*n* Mode of Receive Interrupts

- **0** Single shot mode for the corresponding receive window
- **1** Repetitive mode for the corresponding receive window

TDMA +0188h Baseband Downlink Control Register TDMA_BDLCON

Bit	15	14	13	12	11	10	9	8	7	6	5	4	3	2	1	0
Name	ADC_ON										ADC_OFF					
Type	R/W										R/W					

ADC_ON BRXEN to BRXFS setup up time in quarter bit unit.

ADC_OFF BRXEN to BRXFS hold up time in quarter bit unit.

MTK Confidential Release for Korka

TDMA +018Ch Baseband Uplink Control Register 1

TDMA_BULCON 1

Bit	15	14	13	12	11	10	9	8	7	6	5	4	3	2	1	0
Name	DAC_ON										DAC_OFF					
Type	R/W										R/W					

DAC_ON BTXEN to BTXFS setup up time in quarter bit unit.

DAC_OFF BTXEN to BTXFS hold up time in quarter bit unit.

TDMA +0190h Baseband Uplink Control Register 2

TDMA_BULCON 2

Bit	15	14	13	12	11	10	9	8	7	6	5	4	3	2	1	0
Name									APC_HYS							
Type									R/W							

APC_HYS APCEN to BTXEN hysteresis time in quarter bit unit.

Address	Type	Width	Reset Value	Name	Description
+0000h	R	[13:0]	—	TDMA_TQCNT	Read quarter bit counter
+0004h	R/W	[13:0]	0x1387	TDMA_WRAP	Latched Qbit counter reset position
+0008h	R/W	[13:0]	0x1387	TDMA_WRAPIMD	Direct Qbit counter reset position
+000Ch	R/W	[13:0]	0x0000	TDMA_EVTVAL	Event latch position
+0010h	R/W	[13:0]	—	TDMA_DTIRQ	DSP software control
+0014h	R/W	[13:0]	—	TDMA_CTIRQ1	MCU software control 1
+0018h	R/W	[13:0]	—	TDMA_CTIRQ2	MCU software control 2
+0020h	R/W	[13:0]	—	TDMA_AFC0	The 1st AFC control
+0024h	R/W	[13:0]	—	TDMA_AFC1	The 2nd AFC control
+0028h	R/W	[13:0]	—	TDMA_AFC2	The 3rd AFC control
+002Ch	R/W	[13:0]	—	TDMA_AFC3	The 4th AFC control
+0030h	R/W	[13:0]	—	TDMA_BDLON0	Data serialization of the 1st RX block
+0034h	R/W	[13:0]	—	TDMA_BDLOFF0	
+0038h	R/W	[13:0]	—	TDMA_BDLON1	Data serialization of the 2nd RX block
+003Ch	R/W	[13:0]	—	TDMA_BDLOFF1	
+0040h	R/W	[13:0]	—	TDMA_BDLON2	Data serialization of the 3rd RX block
+0044h	R/W	[13:0]	—	TDMA_BDLOFF2	
+0048h	R/W	[13:0]	—	TDMA_BDLON3	Data serialization of the 4th RX block
+004Ch	R/W	[13:0]	—	TDMA_BDLOFF3	
+0050h	R/W	[13:0]	—	TDMA_BDLON4	Data serialization of the 5th RX block
+0054h	R/W	[13:0]	—	TDMA_BDLOFF4	
+0058h	R/W	[13:0]	—	TDMA_BDLON5	Data serialization of the 6th RX block
+005Ch	R/W	[13:0]	—	TDMA_BDLOFF5	
+0060h	R/W	[13:0]	—	TDMA_BULON0	Data serialization of the 1st TX slot
+0064h	R/W	[13:0]	—	TDMA_BULOFF0	
+0068h	R/W	[13:0]	—	TDMA_BULON1	Data serialization of the 2nd TX slot
+006Ch	R/W	[13:0]	—	TDMA_BULOFF1	
+0070h	R/W	[13:0]	—	TDMA_BULON2	Data serialization of the 3rd TX slot
+0074h	R/W	[13:0]	—	TDMA_BULOFF2	
+0078h	R/W	[13:0]	—	TDMA_BULON3	Data serialization of the 4th TX slot
+007Ch	R/W	[13:0]	—	TDMA_BULOFF3	
+0090h	R/W	[13:0]	—	TDMA_APC0	The 1st APC control

MTK Confidential Release for Korka

+0094h	R/W	[13:0]	—	TDMA_APC1	The 2nd APC control
+0098h	R/W	[13:0]	—	TDMA_APC2	The 3rd APC control
+009Ch	R/W	[13:0]	—	TDMA_APC3	The 4th APC control
+00A0h	R/W	[13:0]	—	TDMA_APC4	The 5th APC control
+00A4h	R/W	[13:0]	—	TDMA_APC5	The 6th APC control
+00A8h	R/W	[13:0]	—	TDMA_APC6	The 7th APC control
+00B0h	R/W	[13:0]	—	TDMA_BSI0	BSI event 0
+00B4h	R/W	[13:0]	—	TDMA_BSI1	BSI event 1
+00B8h	R/W	[13:0]	—	TDMA_BSI2	BSI event 2
+00BCh	R/W	[13:0]	—	TDMA_BSI3	BSI event 3
+00C0h	R/W	[13:0]	—	TDMA_BSI4	BSI event 4
+00C4h	R/W	[13:0]	—	TDMA_BSI5	BSI event 5
+00C8h	R/W	[13:0]	—	TDMA_BSI6	BSI event 6
+00CCh	R/W	[13:0]	—	TDMA_BSI7	BSI event 7
+00D0h	R/W	[13:0]	—	TDMA_BSI8	BSI event 8
+00D4h	R/W	[13:0]	—	TDMA_BSI9	BSI event 9
+00D8h	R/W	[13:0]	—	TDMA_BSI10	BSI event 10
+00DCh	R/W	[13:0]	—	TDMA_BSI11	BSI event 11
+00E0h	R/W	[13:0]	—	TDMA_BSI12	BSI event 12
+00E4h	R/W	[13:0]	—	TDMA_BSI13	BSI event 13
+00E8h	R/W	[13:0]	—	TDMA_BSI14	BSI event 14
+00ECh	R/W	[13:0]	—	TDMA_BSI15	BSI event 15
+0100h	R/W	[13:0]	—	TDMA_BPI0	BPI event 0
+0104h	R/W	[13:0]	—	TDMA_BPI1	BPI event 1
+0108h	R/W	[13:0]	—	TDMA_BPI2	BPI event 2
+010Ch	R/W	[13:0]	—	TDMA_BPI3	BPI event 3
+0110h	R/W	[13:0]	—	TDMA_BPI4	BPI event 4
+0114h	R/W	[13:0]	—	TDMA_BPI5	BPI event 5
+0118h	R/W	[13:0]	—	TDMA_BPI6	BPI event 6
+011Ch	R/W	[13:0]	—	TDMA_BPI7	BPI event 7
+0120h	R/W	[13:0]	—	TDMA_BPI8	BPI event 8
+0124h	R/W	[13:0]	—	TDMA_BPI9	BPI event 9
+0128h	R/W	[13:0]	—	TDMA_BPI10	BPI event 10
+012Ch	R/W	[13:0]	—	TDMA_BPI11	BPI event 11
+0130h	R/W	[13:0]	—	TDMA_BPI12	BPI event 12
+0134h	R/W	[13:0]	—	TDMA_BPI13	BPI event 13
+0138h	R/W	[13:0]	—	TDMA_BPI14	BPI event 14
+013Ch	R/W	[13:0]	—	TDMA_BPI15	BPI event 15
+0140h	R/W	[13:0]	—	TDMA_BPI16	BPI event 16
+0144h	R/W	[13:0]	—	TDMA_BPI17	BPI event 17
+0148h	R/W	[13:0]	—	TDMA_BPI18	BPI event 18
+014Ch	R/W	[13:0]	—	TDMA_BPI19	BPI event 19
+01A0h	R/W	[13:0]	—	TDMA_BPI20	BPI event 20
+01A4h	R/W	[13:0]	—	TDMA_BPI21	BPI event 21
+01B0h	R/W	[13:0]	—	TDMA_AUXEV0	Auxiliary ADC event 0
+01B4h	R/W	[13:0]	—	TDMA_AUXEV1	Auxiliary ADC event 1
+0150h	R/W	[15:0]	0x0000	TDMA_EVTENA0	Event Enable Control 0
+0154h	R/W	[15:0]	0x0000	TDMA_EVTENA1	Event Enable Control 1
+0158h	R/W	[15:0]	0x0000	TDMA_EVTENA2	Event Enable Control 2
+015Ch	R/W	[15:0]	0x0000	TDMA_EVTENA3	Event Enable Control 3

MTK Confidential Release for Konka

+0160h	R/W	[5:0]	0x0000	TDMA_EVTENA4	Event Enable Control 4
+0164h	R/W	[0]	0x0000	TDMA_EVTENA5	Event Enable Control 5
+0170h	R/W	[1:0]	0x0000	TDMA_WRAPOFS	TQ Counter Offset Control Register
+0174h	R/W	[13:0]	0x0000	TDMA_REGBIAS	Biasing Control Register
+0180h	R/W	[3:0]	—	TDMA_DTXCON	DTX Control Register
+0184h	R/W	[15:0]	—	TDMA_RXCON	Receive Interrupt Control Register
+0188h	R/W	[15:0]	—	TDMA_BDLCON	Downlink Control Register
+018Ch	R/W	[15:0]	—	TDMA_BULCON1	Uplink Control Register 1
+0190h	R/W	[7:0]	—	TDMA_BULCON2	Uplink Control Register 2

Table 66 TDMA Timer Register Map

10.2 Slow Clocking Unit

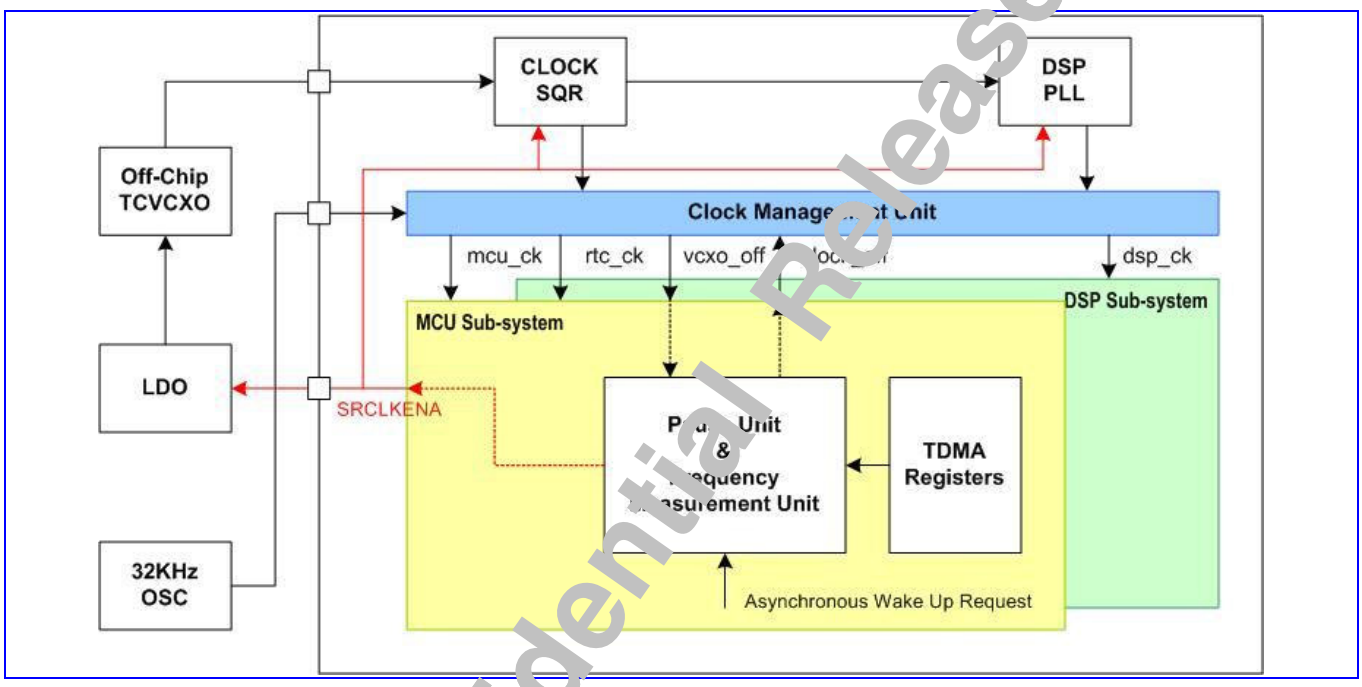

Figure 63 The block diagram of the slow clocking unit

The slow clocking unit is provided to maintain the synchronization to the base-station timing using a 32KHz crystal oscillator while the 13MHz reference clock is switched off. As shown in Figure 63, this unit is composed of frequency measurement unit, pause unit, and clock management unit.

Because of the inaccuracy of the 32KHz oscillator, a frequency measurement unit is provided to calibrate the 32KHz crystal taking the accurate 13MHz source as the reference. The calibration procedure always takes place prior to the pause period.

The pause unit is used to initiate and terminate the pause mode procedure and it also works as a coarse time-base during the pause period.

The clock management unit is used to control the system clock while switching between the normal mode and the pause mode. SRCLKENA is used to turn on/off the clock squarer, DSP PLL and off-chip TCVCXO. CLOCK_OFF signal is used

MTK Confidential Release for Konka

for gating the main MCU and DSP clock, and VCXO_OFF is used as the acknowledgement signal of the CLOCK_OFF request.

10.2.1 Register Definitions

TDMA +0218h Slow clocking unit control register SM_CON

Bit	15	14	13	12	11	10	9	8	7	6	5	4	3	2	1	0
Name															PAUSE_START	FM_START
Type															W	W
Reset															0	0

FM_START Initiate the frequency measurement procedure

PAUSE_START Initiate the pause mode procedure at the next timer wrap position

TDMA +0220h Slow clocking unit status register SM_STA

Bit	15	14	13	12	11	10	9	8
Name								PAUSE_ABORT
Type								R
Bit	7	6	5	4	3	2	1	0
Name	SETTLE_CPL	PAUSE_CPL	PAUSE_INT	PAUSE_RQST			FM_CPL	FM_RQST
Type	R	R	R	R			R	R

FM_RQST Frequency measurement procedure is requested

FM_CPL Frequency measurement procedure is completed

PAUSE_RQST Pause mode procedure is requested

PAUSE_INT Asynchronous wake up from pause mode

PAUSE_CPL Pause period is completed

SETTLE_CPL Settling period is completed

PAUSE_ABORT Pause mode is aborted because of the reception of interrupt prior to entering pause mode

TDMA +022Ch Slow clocking unit configuration register SM_CNF

Bit	15	14	13	12	11	10	9	8	7	6	5	4	3	2	1	0
Name											MSDC	RTC	EINT	KP	SM	FM
Type											R/W	R/W	R/W	R/W	R/W	R/W
Reset											0	0	0	0	1	1

FM Enable interrupt generation upon completion of frequency measurement procedure

SM Enable interrupt generation upon completion of pause mode procedure

KP Enable asynchronous wake-up from pause mode by key press

EINT Enable asynchronous wake-up from pause mode by external interrupt

RTC Enable asynchronous wake-up from pause mode by real time clock interrupt

MSDC Enable asynchronous wake-up from pause mode by memory card insertion interrupt

TDMA +0300h Power-down indication of DSP ROM DSPROMPD

Bit	15	14	13	12	11	10	9	8	7	6	5	4	3	2	1	0
Name					PD_11	PD_10	PD_9	PD_8	PD_7	PD_6	PD_5	PD_4	PD_3	PD_2	PD_1	PD_0
Type					R/W	R/W	R/W	R/W	R/W	R/W	R/W	R/W	R/W	R/W	R/W	R/W

MTK Confidential Release for Konka

Reset					0	0	0	0	0	0	0	0	0	0	0	0

PD_X Power-down indication of page X of DSP CM ROM, X = 5:0

- **0** power down disabled
- **1** power down enabled

PD_X Power-down indication of page X of DSP PM ROM, X = 11:6

- **0** power down disabled
- **1** power down enabled

This register is for controlling the VIA-ROM, which requires a reset signal whenever the ROM is wakened up from power-down mode. It means that as long as MCU plans to interrupt DSP from slow idle, the register should be programmed in advance by 15us, otherwise the read data would be unknown. Total of 12 pages are programmable and is to be reserveed for future usage, by which the MCU can dynamically wake-up only the pages that needs to be accessed. However, for now, MCU can just simply program the register to all one's or all zero's. In view of the hardware, the 12 bits are ANDED as a power-down indication. As the indication turns from high to low, a counter will be triggered to count the 15-us interval according to the MCU clock, then a negative pulse will be generated as the ROM reset.

Address	Type	Width	Reset Value	Name	Description
+0200h	R/W	[2:0]	—	SM_PAUSE_M	MSB of pause duration
+0204h	R/W	[15:0]	—	SM_PAUSE_L	16 LSB of pause duration
+0208h	R/W	[13:0]	—	SM_CLK_SETTLE	Off-chip VCXO settling duration
+020Ch	R	[2:0]	—	SM_FINAL_PAUSE_M	MSB of final pause count
+0210h	R	[15:0]	—	SM_FINAL_PAUSE_L	16 LSB of final pause count
+0214h	R	[13:0]	—	SM_QBIT_START	TQ_ COUNT value at the start of the pause
+0218h	W	[1:0]	0x0000	SM_CON	SM control register
+021Ch	R	[7:3,1:0]	0x0000	SM_STA	SM status register
+0220h	R/W	[15:0]	—	SM_FM_DURATION	32KHz measurement duration
+0224h	R	[9:0]	—	SM_FM_RESULT_M	10 MSB of frequency measurement result
+0228h	R	[15:0]	—	SM_FM_RESULT_L	16 LSB of frequency measurement result
+022Ch	R/W	[4:0]	0x0000	SM_CNF	SM configuration register

10.2.2 Frequency Measurement

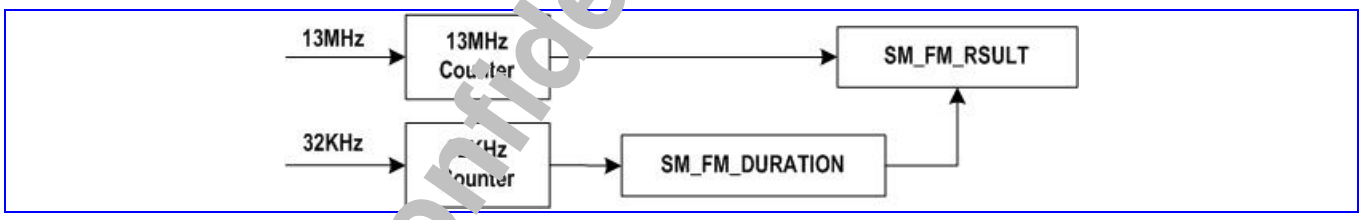

Figure 64 Block Diagram of Frequency Measurement Unit

The MCU writes into the SM_FM_DURATION register the number of clock cycles during which the 32768 Hz clock will be measured. Then, the MCU sets the FM_START bit in the SM_CON register, the hardware sets the FM_RQST flag and resets the FM_CPL flag automatically, and the 32kHz and 13MHz counters are simultaneously started from zero.

When the 32kHz counter reaches the terminal value determined by the SM_FM_DURATION register, the current value of the 13MHz counter is stored in the SM_FM_RESULT register, the counters are stopped, the FM_RQST is reset, and the FM_CPL flag is set.

MTK Confidential Release for Konka

The SM_FM_DURATION is 16 bits wide, and the 32K counter counts $2\times(N+1)$ cycles of 32768Hz. This gives a maximum of almost 4.00s measurement duration.

$$Measured_frequency = \frac{2\times(SM_FM_DURATION+1)\times 13\times 10^6}{SM_FM_RESULT}$$

10.2.3 Pause Mode Operation

The MCU writes the pause and settling time into the SM_PAUSE_M, SM_PAUSE_L and SM_CLK_SETTLE registers and the sum of the pause time and settling time must be as close as possible to the TDMA frame boundary, taking into account of the frequency measurement result.

The MCU should set the PAUSE_START bit ahead of the TDMA_EVTVAL event. The hardware sets the PAUSE_RQST flag and resets the PAUSE_INT, PAUSE_CPL, SETTLE_CPL, PAUSE_ABORT flags automatically, and the pause mode operation will be initiated at the next timer wrap position.

When the pause duration reaches the programmed terminal value or the asynchronous wake up event is received, the pause mode operation is ended/stopped/aborted and the corresponding flag is set (PAUSE_CPL, PAUSE_INT and PAUSE_ABORT). Then, the MCU calculates the timing offset and adjusts the TDMA_WRAPIMD position accordingly.

The number of quarter bit time elapsed during the pause operation is:

$$Nb_quarter_bit = Kqbit\times(SM_FINAL_PAUSE + SM_CLK_SETTLE) - \Delta qbit$$
$$\Delta qbit = TQ_WRAP - SM_QBIT_START$$
$$Kqbit = \frac{32k_period_duration}{quarter_bit_duration} = \frac{SM_FM_RESULT}{24\times(SM_FM_DURATION+1)}$$

MTK Confidential Release for Konka

11 Power, Clocks and Reset

This chapter describes the power, clock and reset management functions provided by MT6228. Together with Power Management IC (PMIC), MT6228 offers both fine and coarse resolutions of power control through software programming. With this efficient method, the developer can turn on selective resources accordingly in order to achieve optimized power consumption. The operating modes of MT6228 as well as main power states provided by the PMIC are shown in **Figure 65**.

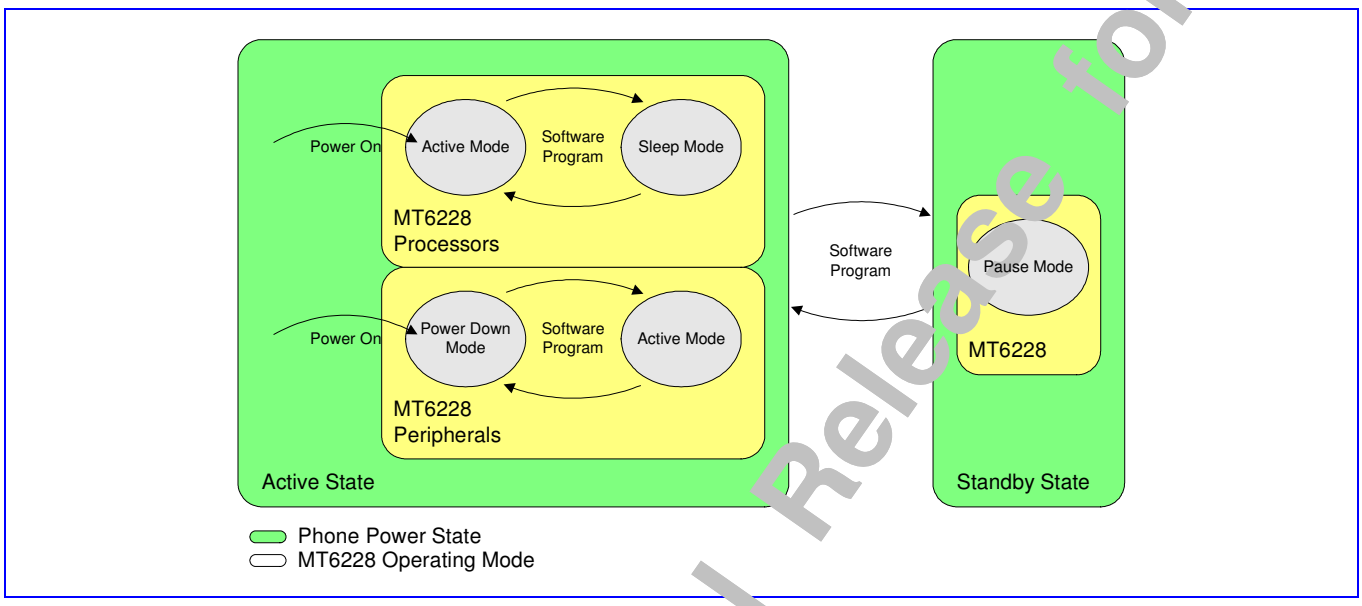

Figure 65 Major Phone Power States and Operating Modes for MT6228 based terminal

11.1 B2PSI

11.1.1 General Description

MT6228 uses a 3-wire B2PSI interface to connect to PMIC. This bi-directional serial bus interface allows baseband to write to or read from PMIC. The bus protocol utilizes a 16-bit format. B2PSICK is the serial bus clock and is driven by the master. B2PSIDAT is the serial data; master or slave can drive it. B2PSICS is the bus selection signal. Once the B2PSICS goes LOW, baseband starts to transfer the 4 register bits followed by a read/write bit, then waits 3 clock cycles for the PMIC B2PSI state machine to decode the operation for the next 8 data bits. The state machine should count 16 clocks to complete the data transfer.

MTK Confidential Release for Konka

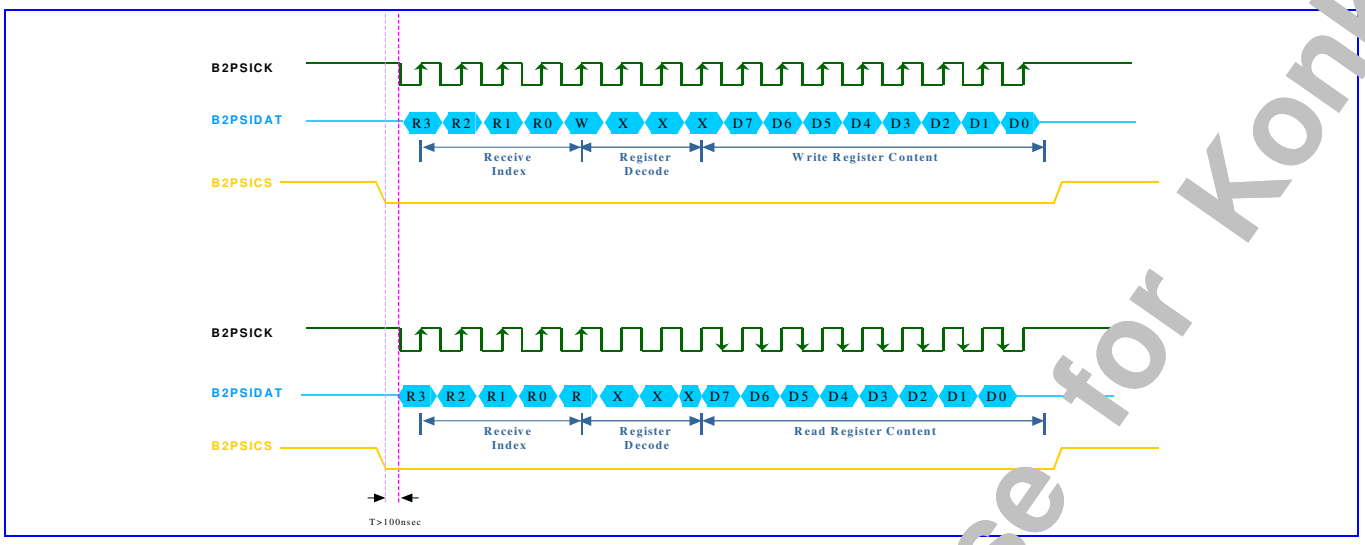

Figure 66 B2PSI bus timing

11.1.2 Register Definitions

B2PSI+0000h B2PSI data register B2PSI_DATA

Bit	15	14	13	12	11	10	9	8	7	6	5	4	3	2	1	0
Name	B2PSI_DATA [15:0]															
Type	R/W															
Reset	0															

B2PSI_DATA The B2PSI DATA format contains 4 bit register + 3 bit do not care + write / read bit + 8 bit data.

- **0** Read operation
- **1** Write operation

To prevent a writing error, B2PSI_DATA must be set to 8216h before the actual data write.

B2PSI +0008h B2PSI baud rate divider register B2PSI _DIV

Bit	15	14	13	12	11	10	9	8	7	6	5	4	3	2	1	0
Name	B2PSI _DIV [15:0]															
Type	R/W															
Reset	0															

B2PSI_DIV B2PSI clock rate divisor. B2PSICK = system clock rate / div.

B2PSI+0010h B2PSI status register B2PSI_STAT

Bit	15	14	13	12	11	10	9	8	7	6	5	4	3	2	1	0
Name															WRITE_SUCCESS	READ_READT
Type															RC	RC
Reset															0	0

READ_READY Read data ready.

- **0** Read data is not ready yet.
- **1** Read data is ready. The bit is cleared by reading B2PSI_STAT register or if B2PSI initializes a new transmit.

MTK Confidential Release for Konka

WRITE_SUCCESS B2PSI write successfully.

- **0** B2PSI write is not finished yet.
- **1** B2PSI write has finished. The bit is cleared by reading B2PSI_STAT register or if B2PSI initializes a new transmit.

B2PSI+0014h B2PSI CS to CK time register — B2PSI_TIME

Bit	15	14	13	12	11	10	9	8	7	6	5	4	3	2	1	0
Name														B2PSI_TIME		
Type														R/W		
Reset														0		

B2PSI_TIME The time interval that first B2PSICK is started after the B2PSICS is active low.
Time interval = 1/system clock * B2PSI_time.

11.2 Clocks

There are two major time bases in MT6228. The faster one is the 13 MHz clock originating from an off-chip temperature-compensated voltage controlled oscillator (TCVCXO) that can be either 13 MHz or 26 MHz. This signal is the input from the SYSCLK pad that is then converted to the square-wave signal by the clock squarer. The other time base is the 32768 Hz clock generated by an on-chip oscillator connected to an external crystal. **Figure 67** shows the clock sources as well as their utilizations inside the chip.

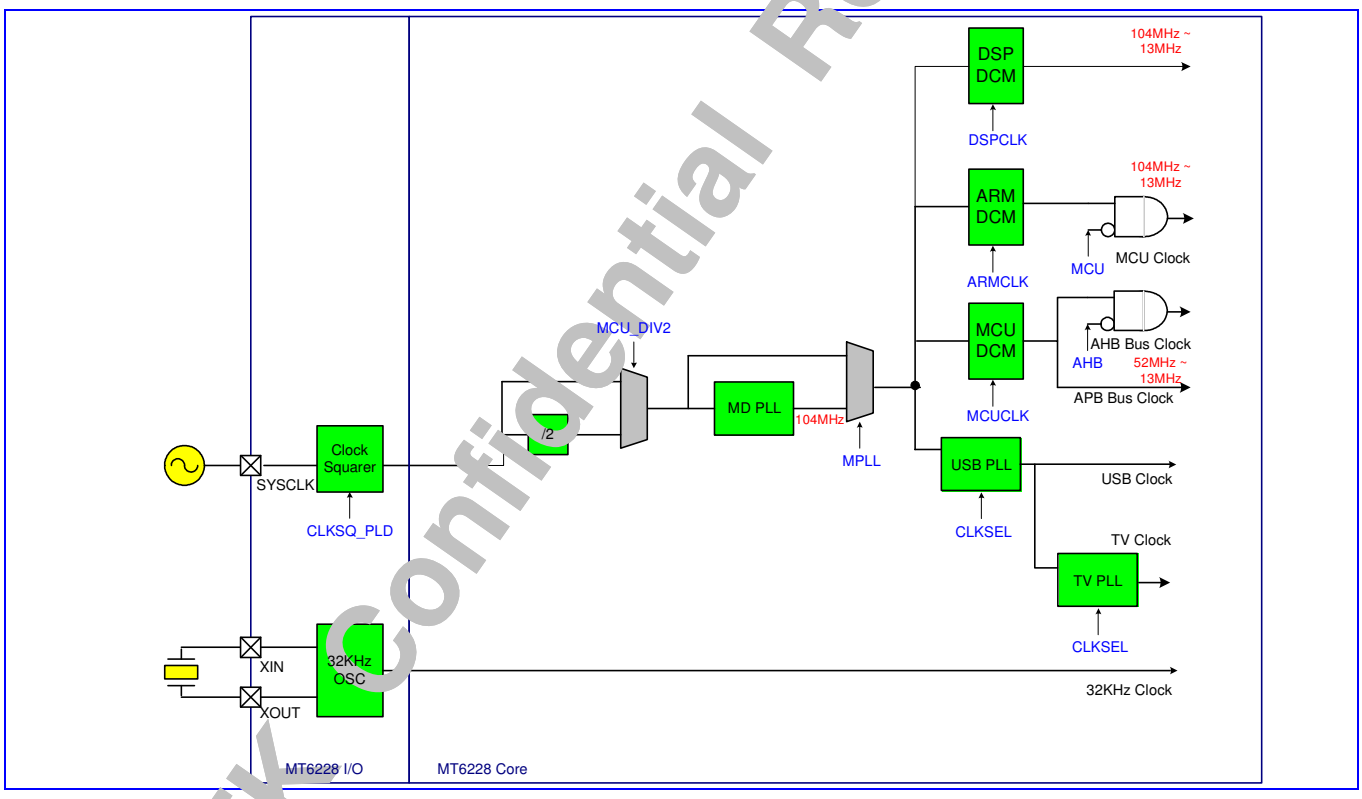

Figure 67 Clock distributions inside the MT6228.

MTK Confidential Release for Konka

11.2.1 32.768 KHz Time Base

The 32768 Hz clock is always running. It is mainly used as the time base of the Real Time Clock (RTC) module, which maintains time and date with counters. Therefore, the 32768 Hz oscillator and the RTC module are powered by separate voltage supplies that are not be powered down when the other power supplies are.

In low power mode, the 13 MHz time base is turned off, so the 32768 Hz clock is employed to update critical TDMA timer and Watchdog Timer. This time base is also used to clock the keypad scanner logic.

11.2.2 13 MHz Time Base

A 1/2-divider, for MCU Clock, exists to allow usage of either 26 or 13 MHz TCVCXO as clock input.

Three phase-locked loops (MDPLL, TPLL and UPLL) are used to generate four primary clocks, MCU_CLOCK, DSP_CLOCK, USB_CLOCK and TV_CLOCK, and to clock modules in the MCU Clock Domain and DSP Clock Domain, USB and TV Encoder, respectively. These PLLs require no off-chip components for operations and can be turned off independently in order to save power. After power-on, all the PLLs are off by default and the source clock signal is selected through multiplexers. The software takes care of the PLL lock time while changing the clock selections. The PLLs and their usages are listed below.

MDPLL **provides the MCU system clock (MCU_CLOCK) and DSP system clock (*DSP_CLOCK*. DPLL). MCU_CLOCK clocks the MCU core, MCU memory system and MCU peripherals as well. DSP_CLOCK clocks DSP core and DSP-related modules. MDPLL can be programmed to provide 1X to 8X output of 13 MHz reference. However, because of the employment of DCM (dynamic clock manager), the output of MDPLL are set as 104 MHz. The clock rates of MCU system and DSP system can only be changed by programming the clock rate setting of MCU DCM and DSP DCM.**

UPLL provides the USB clock, USB_CLOCK. The UPLL input is a 4 MHz clock, which comes from 104 MHz clock generated by MDPLL and then divided by 26. UPLL pumps the input clock source 12 times to generate 48 MHz for USB module.

TPLL provides the TV encoder clock, TV_CLOCK. The TPLL input is a 3 MHz clock, which comes from the 48 MHz clock generated by UPLL and then divided by 16. TPLL pumps the input clock source 9 times to generate 27 MHz for TV encoder.

Note that PLLs need some time to become stable after being powered up. The software takes care of the PLL lock time before switching them to the proper frequency. Usually, a software loop longer than the PLL lock time is employed to deal with the problem.

For power management, the MCU software program may stop MCU Clock by setting the Sleep Control Register. Any interrupt requests to MCU can terminate the sleep mode, and thus returning MCU to the running mode.

AHB can also be stopped by setting the Sleep Control Register. However, the behavior of AHB in sleep mode is a little different from that of MCU. After entering Sleep Mode, it can be temporarily waken up by any “hreq” (bus request), and then go back to sleep automatically after all “hreqs” de-assert. Therefore, any transactions can still take place as usual during AHB sleep mode, and power is saved when there are no transactions. The penalty associated with this is that the system loses some efficiency due to the switching on and off of the bus clock, but this impact is small.

MTK Confidential Release for Konka

11.2.3 Dynamic Clock Switch of MCU Clock

Dynamic Clock Manager is implemented to allow MCU and DSP switching clock dynamically without any jitter, and enabling signal drift, and system can operate stably during any clock rate switch.

Please note that MDPLL must be enabled and the frequency is set as 104 MHz. Before switching to the 104 MHz clock rate, the clock from MD DIV2 feeds through dynamic clock manager (DCM) directly. That means if MD DIV2 is enabled, the internal clock rate is the half of SYSCLK. Contrarily, the internal clock rate is identical to SYSCLK.

However, the settings of some hardware modules are required to change before or after clock rate change. Software has the responsibility of changing them at the proper timing. The following table is a list of hardware modules that need to change their settings during a clock rate change.

Module Name	Programming Sequence
EMI	Wait state is changed before clock rate change if the clock rate changes from low to high, and after the clock rate change if the clock rate changes from high to low. The new wait state does not take effect until the current EMI access is complete. Software should insert a period of time before switching clock.
NAND	Wait state is changed before clock rate change if the clock rate changes from low to high, and after clock rate change if the clock rate changes from high to low. New wait state will not take effect until current EMI access is complete. Software should insert a period of time before switching clock.
LCD	Change wait state while LCD in IDLE state.

Table 67 Programming sequence during clock switch

11.2.4 Register Definitions

CONFG+0100h MDPLL Frequency Register MDPLL

Bit	15	14	13	12	11	10	9	8	7	6	5	4	3	2	1	0
Name				CALI					RST					SPD		
Type				R/W					R/W					R/W		
Reset				0					0					0		

SPD Selects the Output Clock Rate for MDPLL.

Note: The output of MDPLL is a 104 MHz clock for normal function. The clock rate of MCU system and DSP system is adjusted by programming MCU DCM and DSP DCM.

000 power down
001 13MHz x 2
010 13MHz x 3
011 13MHz x 4
000 13MHz x 5
101 13MHz x 6
110 13MHz x 7
111 13MHz x 8

RST Resets Control of MDPLL

0 Normal Operation

MTK Confidential Release for Konka

1 Reset the MDPLL

CALI Calibration Control for MDPLL

CONFG+108h UPLL Frequency register — UPLL

Bit	15	14	13	12	11	10	9	8	7	6	5	4	3	2	1	0
Name				CALI					RST							
Type				R/W					R/W							
Reset				0					0							

RST Resets Control of UPLL

0 Normal Operation

1 Reset the UPLL

CALI Calibration Control for UPLL

CONFG+10Ch TPLL Frequency register — TPLL

Bit	15	14	13	12	11	10	9	8	7	6	5	4	3	2	1	0
Name				CALI					RST							
Type				R/W					R/W							
Reset				0					0							

RST Reset Control of TPLL

0 Normal Operation

1 Reset the TPLL

CALI Calibration Control for TPLL

CONFG+110h Clock Control Register — CLK_CON

Bit	15	14	13	12	11	10	9	8	7	6	5	4	3	2	1	0
Name	TV_EXTCK	USB_EXTCK	DSP_EXTCK					TPLL_TMA	UPLL_TMA	MDPLL_TMA		CLKSQ_PLD	MD_DIV2		MDPLL	
Type	R/W	R/W	R/W					R/W	R/W	R/W		R/W	R/W		R/W	
Reset	0	0	0					0	0	0		0	0		0	

MDPLL Selects MCU and DSP clock source

0 MDPLL bypassed

1 Using MDPLL Clock

MD_DIV2 Control the x2 clock divider for MDPLL reference clock input.

0 Divider bypassed

1 Divider not bypassed

CLKSQ_PLD Pull Down Control

0 Disable

1 Enables

MDPLL_TMA MDPLL test mode

0 Disable

1 Enable

UPLL_TMA UPLL test mode

0 Disable

1 Enable

TPLL_TMA TPLL test mode

MTK Confidential Release for Konka

0 Disable
1 Enable

DSP_EXTCK DSP external clock. When enabled, an external clock source from PIN EINT0 is used instead of DSP clock from MDPLL output.
0 Disable
1 Enable

USB_EXTCK USB external clock. When enabled, an external clock source from EINT1 is used instead of UPLL output.
0 Disable
1 Enable

TV_EXTCK TV external clock. When enabled, an external clock source from EINT3 is used instead of TPLL output.
0 Disable
1 Enable

CONFG+114h Sleep Control Register SLEEP_CON

Bit	15	14	13	12	11	10	9	8	7	6	5	4	3	2	1	0
Name														DSP	AHB	MCU
Type														WO	WO	WO
Reset														0	0	0

MCU Stops the MCU Clock to force MCU Processor to enter sleep mode. MCU clock resumes as long as there is an interrupt request or system is reset.
0 MCU Clock is running
1 MCU Clock is stopped

AHB Stops the AHB Bus Clock to force the entire bus to enter sleep mode. AHB clock resumes as long as there is an interrupt request or system is reset.
0 AHB Bus Clock is running
1 AHB Bus Clock is stopped

DSP Stops the DSP Clock.
0 DSP Bus Clock is running
1 DSP Bus Clock is stopped

CONFG+0118h MCU Clock Control Register MCUCLK_CON

Bit	15	14	13	12	11	10	9	8	7	6	5	4	3	2	1	0
Name					ARM_FSEL								MCU_FSEL			
Type					R/W								R/W			
Reset					3								3			

MCU_FSEL MCU clock frequency selection. This control register is used to control the output clock frequency of MCU Dynamic Clock Manager. The clock frequency is from 13MHz to 52MHz. The waveforms of the output clock are shown below.

Note that the clock period of 39MHz is not uniform. The shortest period of 39MHz clock is the same as the period of 52MHz. As a result, the wait states of external interfaces, such as EMI, NAND, and so on, have to be configured based on 52MHz timing. Therefore, the MCU performance executing in external memory at 39MHz may be worse than at 26MHz.

Also note that the maximum latency of clock switch is 8 104MHz-clock periods. Software provides at least 8T locking time after clock switch command.

MTK Confidential Release for Konka

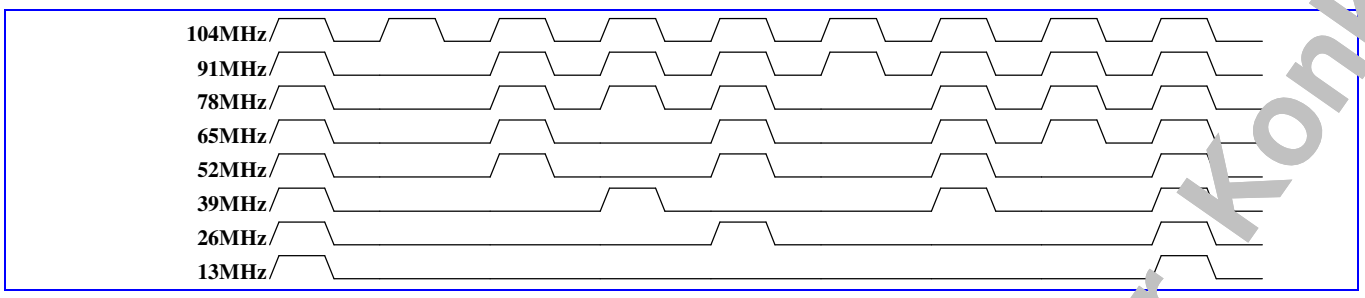

Figure 68 Output of Dynamic Clock Manager

0 13MHz
1 26MHz
2 39MHz
3 52MHz
Others reserved

ARM_FSEL ARM clock frequency selection. This control register is used to control the output clock frequency of ARM Dynamic Clock Manager. The clock frequency is from 13MHz to 104MHz. 39MHz is not a uniform period clock.

0 13MHz
1 26MHz
2 39MHz
3 52MHz
4 reserved
5 reserved
6 reserved
7 104MHz
Others reserved

CONFG+011Ch DSP Clock Control Register DSPCLK_CON

Bit	15	14	13	12	11	10	9	8	7	6	5	4	3	2	1	0
Name													DSP_FSEL			
Type													R/W			
Reset													3			

DSP_FSEL DSP clock frequency selection. This control register is used to control the output clock frequency of DSP Dynamic Clock Manager. The clock frequency is from 13MHz to 104MHz. 39MHz, 65MHz, 78MHz, and 91MHz are not a uniform period clock rate.

0 13MHz
1 26MHz
2 39MHz
3 52MHz
4 65MHz
5 78MHz
6 91MHz
7 104MHz

MTK Confidential Release for Konka

Others reserved

11.3 Reset Generation Unit (RGU)

Figure 69 shows the reset scheme used in MT6228. MT6228 provides three kinds of resets: hardware reset, watchdog reset, and software reset.

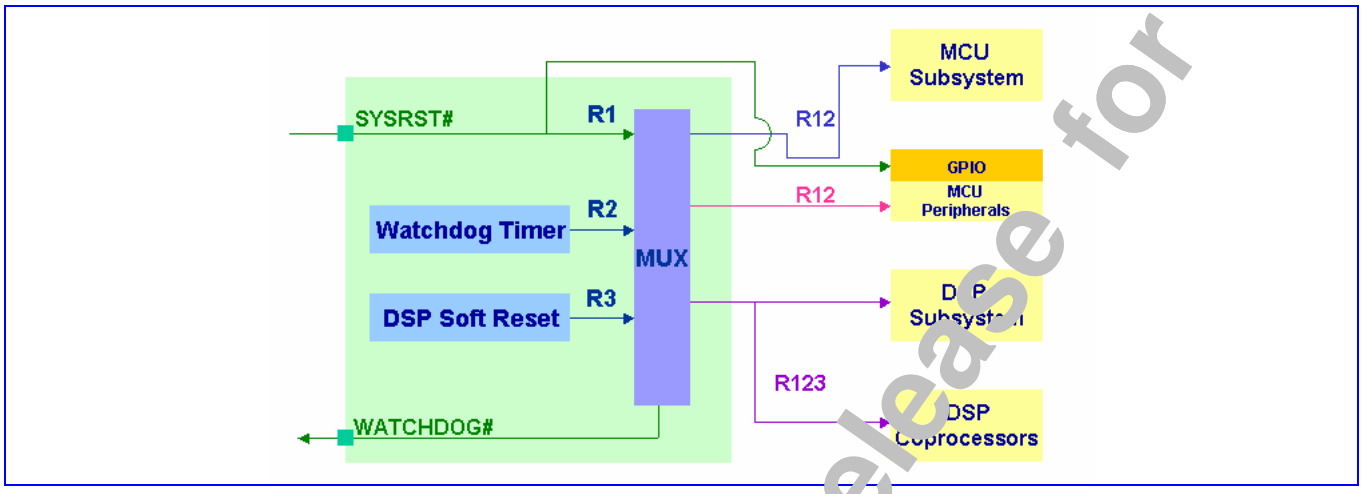

Figure 69 Reset Scheme Used in MT6228

11.3.1 General Description

11.3.1.1 Hardware Reset

This reset is input through the SYSRST# pin, which is driven low during power-on. The hardware reset has a global effect on the chip: all digital and analog circuits are initialized, except the Real Time Clock module. The initial states of the MT6228 sub-blocks are as follows:.

- All analog circuits are turned off.
- All PLLs are turned off and bypassed. The 13 MHz system clock is the default time base.
- Special trap states in GPIO.

11.3.1.2 Watchdog Reset

A watchdog reset is generated when the Watchdog Timer expires: the MCU software failed to re-program the timer counter in time. This situation is typically induced by abnormal software execution, which can be aborted by a hardwired watchdog reset. Hardware blocks that are affected by the watchdog reset are:

- MCU subsystem,
- DSP subsystem, and
- External components (trigged by software).

MTK Confidential Release for Konka

11.3.1.3 Software Resets

Software resets are local reset signals that initialize specific hardware components. For example, if hardware failures are detected, the MCU or DSP software may write to software reset trigger registers to reset those specific hardware modules to their initial states.

The following modules have software resets.

- DSP Core
- DSP Coprocessors

11.3.2 Register Definitions

RGU +0000h Watchdog Timer Control Register WDT_MODE

Bit	15	14	13	12	11	10	9	8	7	6	5	4	3	2	1	0
Name	KEY[7:0]											AUTO-RESTART	IRQ	EXTEN	EXTPOL	ENABLE
Type												R/W	R/W	R/W	R/W	R/W
Reset												0	0	0	0	1

ENABLE Enables the Watchdog Timer.

0 Disables the Watchdog Timer.

1 Enables the Watchdog Timer.

EXTPOL Defines the polarity of the external watchdog pin.

0 Active low.

1 Active high.

EXTEN Specifies whether or not to generate an external watchdog reset signal.

0 The watchdog does not generate an external watchdog reset signal.

1 If the watchdog counter reaches zero, an external watchdog signal is generated.

IRQ Issues an interrupt instead of a Watchdog Timer reset. For debug purposes, RGU issues an interrupt to the MCU instead of resetting the system.

0 Disable.

1 Enable.

AUTO-RESTART Restarts the Watchdog Timer counter with the value of WDT_LENGTH while task ID is written into Software Debug Unit.

0 Disable. The counter restarts by writing KEY into the WDT_RESTART register.

1 Enable. The counter restarts by writing KEY into the WDT_RESTART register or by writing task ID into the software debug unit.

KEY Write access is allowed if KEY=0x22.

RGU +0004h Watchdog Time-Out Interval Register WDT_LENGTH

Bit	15	14	13	12	11	10	9	8	7	6	5	4	3	2	1	0
Name	TIMEOUT[10:0]											KEY[4:0]				
Type	WO															
Reset	111_1111_1111b															

KEY Write access is allowed if KEY=08h.

MTK Confidential Release for Konka

TIMEOUT The counter is restarted with {TIMEOUT [10:0], 1_1111_1111b}. Thus the Watchdog Timer time-out period is a multiple of 512*T_{32k}=15.6ms.

RGU +0008h Watchdog Timer Restart Register WDT_RESTART

Bit	15	14	13	12	11	10	9	8	7	6	5	4	3	2	1	0
Name	KEY[15:0]															
Type																
Reset																

KEY Restart the counter if KEY=1971h.

RGU +000Ch Watchdog Timer Status Register WDT_STA

Bit	15	14	13	12	11	10	9	8	7	6	5	4	3	2	1	0
Name	WDT	SW_WDT														
Type	RO	RO														
Reset	0	0														

WDT Indicates the cause of the watchdog reset.

- **0** Reset not due to Watchdog Timer.
- **1** Reset because the Watchdog Timer time-out period expired.

SW_WDT Indicates if the watchdog was triggered by software.

- **0** Reset not due to software-triggered Watchdog Timer.
- **1** Reset due to software-triggered Watchdog Timer.

NOTE: A system reset does not affect this register. This bit is cleared when the WTU_MODE register ENABLE bit is written.

RGU +0010h CPU Peripheral Software Reset Register SW_PERIPH_RSTN

Bit	15	14	13	12	11	10	9	8	7	6	5	4	3	2	1	0
Name		DAMRST	USBRST						KEY							
Type		R/W	R/W													
Reset		0	0													

KEY Write access is allowed if KEY=37h.

DMARST Reset the DMA peripheral.

- **0** No reset.
- **1** Invoke a reset.

USBRST Reset the USB.

- **0** No reset.
- **1** Invoke a reset.

RGU +0014h DSP Software Reset Register SW_DSP_RSTN

Bit	15	14	13	12	11	10	9	8	7	6	5	4	3	2	1	0
Name	RST															
Type	R/W															
Reset	0															

RST Controls the DSP System Reset Control.

MTK Confidential Release for Konka

0 No reset.
1 Invoke a reset.

RGU +0018h Watchdog Timer Reset Signal Duration Register WDT_RSTINTREVAL

Bit	15	14	13	12	11	10	9	8	7	6	5	4	3	2	1	0
Name					LENGTH[11:0]											
Type					R/W											
Reset					FFFh											

LENGTH This register indicates the reset duration when Watchdog Timer times out. However, if the WDT_MODE register IRQ bit is set to 1, an interrupt is issued instead of a reset.

RGU+001Ch Watchdog Timer Software Reset Register WDT_SWRST

Bit	15	14	13	12	11	10	9	8	7	6	5	4	3	2	1	0
Name	KEY[15:0]															
Type																
Reset																

Software-triggered Watchdog Timer reset. If the register content matches the KEY, a watchdog reset is issued. However, if the WDT_MODE register IRQ bit is set to 1, an interrupt is issued instead of a reset.

KEY 1209h

11.4 Software Power Down Control

In addition to the Pause Mode capability while in the Standby State, the software program can also put each peripheral independently into Power Down Mode while in the Active State by gating off their clock. The typical logic implementation is depicted in **Figure 70**. For all configuration bits, 1 signifies that the function is in Power Down Mode, and 0 means the function is in the Active Mode.

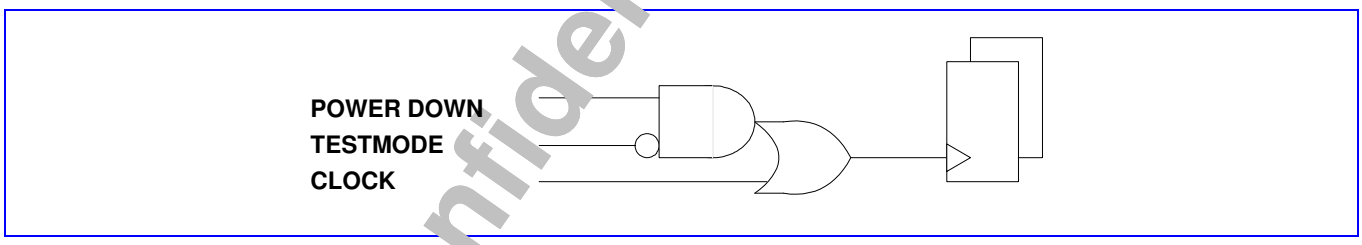

Figure 70 Power Down Control at Block Level

11.4.1 Register Definitions

CONFG+300h Power Down Control 0 Register PDN_CON0

Bit	15	14	13	12	11	10	9	8	7	6	5	4	3	2	1	0
Name		MDPLL		CLK_DIV2	CLKSQ	UPLL	TPLL				PPP	CHE	WAVETABLE	GCU	USB	DMA
Type		R/W		R/W	R/W	R/W	R/W				R/W	R/W	R/W	R/W	R/W	R/W

MTK Confidential Release for Konka

Reset		1		1	0	1	1				1	1	1	1	1	1

DMA Controls the DMA Controller Power Down.
USB Controls the USB Controller Power Down.
GCU Controls the GCU Controller Power Down.
WAVETALBE Controls the DSP WaveTable DMA Power Down.
CHE Controls the CHE Power Down.
PPP Controls the PPP Framer Power Down.
TPLL Controls the TPLL Power Down.
UPLL Controls the UPLL Power Down.
CLKSQ Controls the Clock squarer Power Down.
CLK_DIV2 Controls the Input Clock DIV2 Power Down.
MDPLL Controls the MCU and DSP PLL Power Down.

CONFG +304h Power Down Control 1 Register PDN_CON1

Bit	15	14	13	12	11	10	9	8	7	6	5	4	3	2	1	0
Name	IRDA	UART3	B2PSI	NFI	PWM2	SWDBG	MSDC	UART2	LCD	ALTER	PWM1	SIM	UART1	GPIO	KP	GPT
Type	R/W	R/W	R/W	R/W	R/W	R/W	R/W	R/W	R/W	R/W	R/W	R/W	R/W	R/W	R/W	R/W
Reset	1	1	1	1	1	1	1	1	1	1	1	1	0	1	1	1

GPT Controls the General Purpose Timer Power Down.
KP Controls the Keypad Scanner Power Down.
GPIO Controls the GPIO Power Down.
UART1 Controls the UART1 Controller Power Down.
SIM Controls the SIM Controller Power Down.
PWM1 Controls the PWM1 Generator Power Down.
ALTER Controls the Alerter Generator Power Down.
LCD Controls the Serial LCD Controller Power Down.
UART2 Controls the UART2 Controller Power Down.
MSDC Controls the MS/SD Controller Power Down.
PWM2 Controls the PWM2 Generator Power Down.
SWDBG Controls the MCU/DSP Software Debug Power Down.
NFI Controls the NAND FLASH Interface Power Down.
B2PSI Controls the Serial Port Interface Power Down.
UART3 Controls the UART3 Controller Power Down.
IRDA Controls the IrDA Framer Power Down.

CONFG +308h Power Down Control 2 Register PDN_CON2

Bit	15	14	13	12	11	10	9	8	7	6	5	4	3	2	1	0
Name	GMSK	BBRX	SCCB	AAFE	DIV	GCC	BFE	VAFE	AUXAD	FCS	APC	AFC	BPI	BSI	RTC	TDMA
Type	R/W	R/W	R/W	R/W	R/W	R/W	R/W	R/W	R/W	R/W	R/W	R/W	R/W	R/W	R/W	R/W
Reset	1	1	1	1	1	1	1	1	1	1	1	1	1	1	1	1

TDMA Controls the TDMA Power Down.
RTC Controls the RTC Power Down.

MTK Confidential Release for Konka

BSI Controls the BSI Power Down. This control is not be updated until both tdma_evtval and qbit_en are asserted.
BPI Controls the BPI Power Down. This control is not be updated until both tdma_evtval and qbit_en are asserted.
AFC Controls the AFC Power Down. This control is not be updated until both tdma_evtval and qbit_en are asserted.
APC Controls the APC Power Down. This control is not be updated until both tdma_evtval and qbit_en are asserted.
FCS Controls the FCS Power Down.
AUXAD Controls the AUX ADC Power Down.
VAFE Controls the Audio Front End of VBI Power Down.
BFE Controls the Base-Band Front End Power Down.
GCU Controls the GCU Power Down.
DIV Controls the Divider Power Down.
AAFE Controls the Audio Front End of MP3 Power Down.
SCCB Controls the SCCB Power Down.
BBRX Controls the BB RX Power Down.
GMSK Controls the GMSK Power Down.

CONFG +30Ch Power Down Control 3 Register PDN_CON3

Bit	15	14	13	12	11	10	9	8	7	6	5	4	3	2	1	0
Name	DRZ	IMGDMA	DCT	ISP	PRZ	JPEG	MP4	G2D	GCMQ	GIF	PNG	IPP	TV	CRZ	RESZ LB	ICE
Type	R/W	R/W	R/W	R/W	R/W	R/W	R/W	R/W	R/W	R/W	R/W	R/W	R/W	R/W	R/W	R/W
Reset	1	1	1	1	1	1	1	1	1	1	1	1	1	1	1	1

ICE Enables the debug feature of the ARM7EJS core. Controls the DBGEN pin of the ICEBreaker.
RESZ LB Controls the Post Resizer Power Down.
TV Controls the TV Encoder Power Down.
CRZ Controls the Capture Resizer Power Down.
IPP Controls the Image Processor Power Down.
PNG Controls the PNG Decoder Power Down.
GIF Controls the GIF Decoder Power Down.
GCMQ Controls the Graphic Command Queue Power Down.
G2D Controls the 2D Accelerator Power Down.
MP4 Controls the MPEG-4 Power Down.
JPEG Controls the JPEG Power Down.
REZ Controls the Resizer Power Down.
ISP Controls the Image Signal Processor Power Down.
DCT Controls the DCT Power Down.
IMGDMA Controls the Image DMA Power Down.
DRZ Controls the Drop Resizer Power Down.

CONFG +330h Power Down Control 4 Register PDN_CON4

Bit	15	14	13	12	11	10	9	8	7	6	5	4	3	2	1	0
Name											APC	AFC	BPI	BSI		
Type											WO	WO	WO	WO		
Reset											1	1	1	1		

BSI Controls the BSI Power Down. This control is updated immediately.
BPI Controls the BPI Power Down. This control is updated immediately.

MTK Confidential Release for Konka

AFC Controls the AFC Power Down. This control is updated immediately.

APC Controls the APC Power Down. This control is updated immediately.

CONFG+0310h Power Down Set 0 Register PDN_SET0

Bit	15	14	13	12	11	10	9	8	7	6	5	4	3	2	1	0
Name		MDPLL		CLK_DIV2	CLKSQ	UPLL	TPLL				PPP	CHE	WAVETABLE	GCU	USB	DMA
Type		W1S		W1S	W1S	W1S	W1S				W1S	W1S	W1S	W1S	W1S	W1S

CONFG+0314h Power Down Set 1 Register PDN_SET1

Bit	15	14	13	12	11	10	9	8	7	6	5	4	3	2	1	0
Name	IRDA	UART3	B2PSI	NFI	TRC	PWM2	MSDC	UART2	LCD	ALTER	PWM1	SIM	UART1	GPIO	KP	GPT
Type	W1S	W1S	W1S	W1S	W1S	W1S	W1S	W1S	W1S	W1S	W1S	W1S	W1S	W1S	W1S	W1S

CONFG+0318h Power Down Set 2 Register PDN_SET2

Bit	15	14	13	12	11	10	9	8	7	6	5	4	3	2	1	0
Name	GMSK	BBRX	SCCB	AAFE	DIV	GCC	BFE	VAFE	AUXAD	FCS	APC	AFC	BPI	BSI	RTC	TDMA
Type	W1S	W1S	W1S	W1S	W1S	W1S	W1S	W1S	W1S	W1S	W1S	W1S	W1S	W1S	W1S	W1S

CONFG+031Ch Power Down Set 3 Register PDN_SET3

Bit	15	14	13	12	11	10	9	8	7	6	5	4	3	2	1	0
Name	DRZ	IMGDMA	DCT	ISP	REZ	JPEG	MP4	G2D	GCMQ	GIF	PNG	IPP	TV	CRZ	RESZLB	ICE
Type	W1S	W1S	W1S	W1S	W1S	W1S	W1S	W1S	W1S	W1S	W1S	W1S	W1S	W1S	W1S	W1S

CONFG+0334h Power Down Set 4 Register PDN_SET4

Bit	15	14	13	12	11	10	9	8	7	6	5	4	3	2	1	0
Name											APC	AFC	BPI	BSI		
Type											W1S	W1S	W1S	W1S		

These registers are used to set power down control bit individually. Only bits set to 1 are in effect. Setting the bits to 1 sets the corresponding power down control bits to 1. Otherwise, the bits retain their original value.

EACH BIT Set the Associated Power Down Control Bit to 1.

- **0** No effect.
- **1** Set corresponding bit to 1.

CONFG+0320h Power Down Clear 0 Register PDN_CLR0

Bit	15	14	13	12	11	10	9	8	7	6	5	4	3	2	1	0
Name		MDPLL		CLK_DIV2	CLKSQ	UPLL	TPLL				PPP	CHE	WAVETABLE	GCU	USB	DMA
Type		W1C		W1C	W1C	W1C	W1C				W1C	W1C	W1C	W1C	W1C	W1C

MTK Confidential Release for Konka

CONFG+0324h Power Down Clear 1 Register PDN_CLR1

Bit	15	14	13	12	11	10	9	8	7	6	5	4	3	2	1	0
Name	IRDA	UART 3	B2PSI	NFI	TRC	PWM2	MSDC	UART 2	LCD	ALTE R	PWM1	SIM	UART 1	GPIO	KP	GPT
Type	W1C	W1C	W1C	W1C	W1C	W1C	W1C	W1C	W1C	W1C	W1C	W1C	W1C	W1C	W1C	W1C

CONFG+0328h Power Down Clear 2 Register PDN_CLR2

Bit	15	14	13	12	11	10	9	8	7	6	5	4	3	2	1	0
Name	GMSK	BBRX	SCCB	AAFE	DIV	GCC	BFE	VAFE	AUXA D	FCS	APC	AFC	BPI	BSI	RTC	TDMA
Type	W1C	W1C	W1C	W1C	W1C	W1C	W1C	W1C	W1C	W1C	W1C	W1C	W1C	W1C	W1C	W1C

CONFG+032C h Power Down Clear 3 Register PDN_CLR3

Bit	15	14	13	12	11	10	9	8	7	6	5	4	3	2	1	0
Name	DRZ	IMGD MA	DCT	ISP	REZ	JPEG	MP4	G2D	GCMQ	GIF	PNG	IPP	TV	CRZ	RESZ LB	ICE
Type	W1C	W1C	W1C	W1C	W1C	W1C	W1C	W1C	W1C	W1C	W1C	W1C	W1C	W1C	W1C	W1C

CONFG+0338h Power Down Clear 4 Register PDN_CLR4

Bit	15	14	13	12	11	10	9	8	7	6	5	4	3	2	1	0
Name											APC	AFC	BPI	BSI		
Type											W1C	W1C	W1C	W1C		

These registers are used to clear power down control bits individually. Only the bits set to 1 are in effect. Setting the bits to 1 sets the corresponding power down control bits to 0. Otherwise, the bits retain their original value.

EACH BIT Clear the Associated Power Down Control Bit.

- **0** no effect
- **1** Set corresponding bit to 0

MTK Confidential Release for Korka

12 Analog Front-end & Analog Blocks

12.1 General Description

To communicate with analog blocks, a common control interface for all analog blocks is implemented. In addition, there are some dedicated interfaces for data transfer. The common control interface translates APB bus write and read cycle for specific addresses related to analog front-end control. During writing or reading of any of these control registers, there is a latency associated with transferring of data to or from the analog front-end. Dedicated data interface of each analog block is implemented in the corresponding digital block. The Analog Blocks includes the following analog function for complete GSM/GPRS base-band signal processing:

1. *Base-band RX*: For I/Q channels base-band A/D conversion
2. *Base-band TX*: For I/Q channels base-band D/A conversion and smoothing filtering, DC level shifting
3. *RF Control*: Two DACs for automatic power control (APC) and automatic frequency control (AFC) are included. Their outputs are provided to external RF power amplifier and VCXO), respectively.
4. *Auxiliary ADC*: Providing an ADC for battery and other auxiliary analog function monitoring
5. *Audio mixed-signal blocks:* It provides complete analog voice signal processing including microphone amplification, A/D conversion, D/A conversion, earphone driver, and etc. Besides, dedicated stereo D/A conversion and amplification for audio signals are included).
6. *Clock Generation*: A clock squarer for shaping system clock, and three PLLs that provide clock signals to DSP, MCU, and USB units are included
7. *XOSC32*: It is a 32-KHz crystal oscillator circuit for RTC application Analog Block Descriptions

12.1.1 BBRX

12.1.1.1 Block Descriptions

The receiver (RX) performs base-band I/Q channels downlink analog-to-digital conversion:

1. *Analog input multiplexer:* For each channel, a 4-input multiplexer that supports offset and gain calibration is included.
2. *A/D converter:* Two 14-bit sigma-delta ADCs perform I/Q digitization for further digital signal processing.

12.1.1.2 Functional Specifications

The functional specifications of the base-band downlink receiver are listed in the following table.

Symbol	Parameter	Min	Typical	Max	Unit
N	Resolution		14		Bit
FC	Clock Rate		26		MHz
FS	Output Sampling Rate		13/12		MSPS
	Input Swing When GAIN='0'		0.8*AVDD 0.4*AVDD		Vpk Vpk

MTK Confidential Release for Konka

	When GAIN='1'				
OE	Offset Error		+/- 10		mV
FSE	Full Swing Error		+/- 30		mV
	I/Q Gain Mismatch			0.5	dB
SINAD	Signal to Noise and Distortion Ratio - 45kHz sine wave in [0:90] kHz bandwidth - 145kHz sine wave in [10:190] kHz bandwidth	65 65			dB dB
ICN	Idle channel noise - [0:90] kHz bandwidth - [10:190] kHz bandwidth			-74 -70	dB dB
DR	Dynamic Range - [0:90] kHz bandwidth - [10:190] kHz bandwidth	74 70			dB dB
RIN	Input Resistance	75			kΩ
DVDD	Digital Power Supply	1.6	1.8	2.0	V
AVDD	Analog Power Supply	2.5	2.8	3.1	V
T	Operating Temperature	-20		80	℃
	Current Consumption Power-up Power-Down		5 5		mA µA

Table 68 Base-band Downlink Specifications

12.1.2 BBTX

12.1.2.1 Block Descriptions

The transmitter (TX) performs base-band I/Q channels up-link digital-to-analog conversion. Each channel includes:

1. *10-Bits D/A Converter:* It converts digital GMSK modulated signals to analog domain. The input to the DAC is sampled at 4.33-MHz rate with 10-bits resolution.
2. *Smoothing Filter:* The low-pass filter performs smoothing function for DAC output signals with a 350-kHz 2nd-order Butterworth frequency response.

12.1.2.2 Function Specifications

The functional specifications of the base-band uplink transmitter are listed in the following table.

Symbol	Parameter	Min	Typical	Max	Unit
N	Resolution		10		Bit
FS	Sampling Rate		4.33		MSPS
SINAD	Signal to Noise and Distortion Ratio	57	60		dB
	Output Swing	0.18*AVDD		0.89*AVDD	V
VOCM	Output CM Voltage	0.34*AVDD	0.5*AVDD	0.62*AVDD	V

MTK Confidential Release for Konka

	Output Capacitance			20	PF
	Output Resistance	10			KΩ
DNL	Differential Nonlinearity		+/- 0.5		LSB
INL	Integral Nonlinearity		+/- 1.0		LSB
OE	Offset Error		+/- 15		mV
FSE	Full Swing Error		+/- 30		mV
FCUT	Filter –3dB Cutoff Frequency	300	350	400	KHz
ATT	Filter Attenuation at 100-KHz 270-KHz 4.33-MHz	0.1 2.2 46.4	0.0 1.3 43.7	0.0 0.8 41.4	dB dB dB
	I/Q Gain Mismatch		+/- 0.5		dB
	I/Q Gain Mismatch Correction Range	-1.18		+1.18	dB
DVDD	Digital Power Supply	1.6	1.8	2.0	V
AVDD	Analog Power Supply	2.5	2.8	3.1	V
T	Operating Temperature	-20		80	℃
	Current Consumption Power-up Power-Down		5 5		mA µA

Table 69 Base-band Uplink Transmitter Specifications

12.1.3 AFC-DAC

12.1.3.1 Block Descriptions

As shown in the following figure, together with a 2nd-oder digital sigma-delta modulator, AFC-DAC is designed to produce a single-ended output signal at AFC pin. AFC pin should be connected to an external 1st-order R-C low pass filter to meet the 13-bits resolution (DNL) requirement[2].

The AFC_BYP pin is the mid-tap of a resistor divider inside the chip to offer the AFC output common-mode level. Nominal value of this common-mode voltage is half the analog power supply, and typical value of output impedance of AFC_BYP pin is about 21kΩ. To suppress the noise on common mode level, it is suggested to add an external capacitance between AFC_BYP pin and ground. The value of the bypass capacitor should be chosen as large as possible but still meet the settling time requirement set by overall AFC algorithm[3].

[2] DNL performance depends on external output RC filter bandwidth: the narrower the bandwidth, the better the DNL. Thus, there exists a tradeoff between output setting speed and DNL performance

[3] AFC_BYP output impedance and bypass capacitance determine the common-mode settling RC time constant. Insufficient common-mode settling will affect the INL performance. A typical value of 1nF is suggested.

MTK Confidential Release for Konka

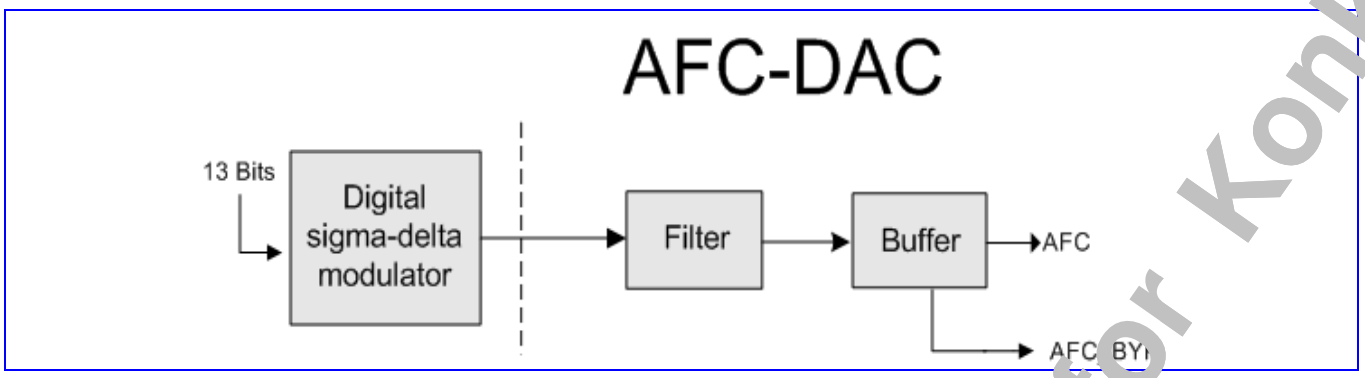

Figure 71 Block diagram of AFC-DAC

12.1.3.2 Functional Specifications

The following table gives the electrical specification of AFC-DAC.

Symbol	Parameter	Min	Typical	Max	Unit
N	Resolution		13		Bit
FS	Sampling Rate		6500		KHz
DVDD	Digital Power Supply	1.6	1.8	2.0	V
AVDD	Analog Power Supply	2.6	2.8	3.1	V
T	Operating Temperature	-20		80	℃
	Current Consumption Power-up Power-Down		1.2	1	mA µA
	Output Swing		0.75*AVDD		V
	Output Resistor (in AFC output RC network)	1			KΩ
DNL	Differential Nonlinearity		+1/-1		LSB
INL	Integral Nonlinearity		+4.0/-4.0		LSB

Table 70 Functional specification of AFC-DAC

12.1.4 APC-DAC

12.1.4.1 Block Descriptions

The APC-DAC is a 10-bits DAC with output buffer aimed for automatic power control. Here blow are its analog pin assignment and functional specification tables.

12.1.4.2 Function Specifications

Symbol	**Parameter**	**Min**	**Typical**	**Max**	**Unit**
N	Resolution		10		Bit
FS	Sampling Rate			1.0833	MSPS
SINAD	Signal to Noise and Distortion Ratio		50		dB

MTK Confidential Release for Konka

	(10-KHz Sine with 1.0V Swing & 100-KHz BW)				
	99% Settling Time (Full Swing on Maximal Capacitance)			5	µS
	Output Swing			AVDD-0.2	V
	Output Capacitance			200	pF
	Output Resistance	10			KΩ
DNL	Differential Nonlinearity		+/- 0.5		LSB
INL	Integral Nonlinearity		+/- 1.0		LSB
OE	Offset Error		+/- 10		mV
FSE	Full Swing Error		+/- 10		mV
DVDD	Digital Power Supply	1.6	1.8	2.0	V
AVDD	Analog Power Supply	2.5	2.8	3.1	V
T	Operating Temperature	-20		80	℃
	Current Consumption Power-up Power-Down		600 1		µA µA

Table 71 APC-DAC Specifications

12.1.5 Auxiliary ADC

12.1.5.1 Block Descriptions

The auxiliary ADC includes the following functional blocks:

1. *Analog Multiplexer:* The analog multiplexer selects signal from one of the seven auxiliary input pins. Real word message to be monitored, like temperature, should be transferred to the voltage domain.
2. *10 bits A/D Converter:* The ADC converts the multiplexed input signal to 10-bit digital data.

12.1.5.2 Function Specifications

The functional specifications of the auxiliary ADC are listed in the following table.

Symbol	Parameter	Min	Typical	Max	Unit
N	Resolution		10		Bit
FC	Clock Rate	0.1	1.0833	5	MHz
FS	Sampling Rate @ N-Bit			5/(N+1)	MSPS
	Input Swing	1.0		AVDD	V
VREFP	Positive Reference Voltage (Defined by AUX_REF pin)	1.0		AVDD	V
CIN	Input Capacitance Unselected Channel Selected Channel			 50 1.2	fF pF
RIN	Input Resistance Unselected Channel Selected Channel	 10 1.8			 MΩ MΩ

MTK Confidential Release for Konka

RS	Resistor String Between AUX_REF pin & ground Power Up Power Down	35 10	50	65	KΩ MΩ
	Clock Latency		11		1/FC
DNL	Differential Nonlinearity		+0.5/-0.5		LSB
INL	Integral Nonlinearity		+1.0/-1.0		LSB
OE	Offset Error		+/- 10		mV
FSE	Full Swing Error		+/- 10		mV
SINAD	Signal to Noise and Distortion Ratio (10-KHz Full Swing Input & 13-MHz Clock Rate)		50		dB
DVDD	Digital Power Supply	1.6	1.8	2.0	V
AVDD	Analog Power Supply	2.5	2.8	3.1	V
T	Operating Temperature	-20		80	℃
	Current Consumption Power-up Power-Down		300 1		µA µA

Table 72 The Functional specification of Auxiliary ADC

12.1.6 Audio mixed-signal blocks

12.1.6.1 Block Descriptions

Audio mixed-signal blocks (AMB) integrate complete voice uplink/downlink and audio playback functions. As shown in the following figure, it includes mainly three parts. The first consists of stereo audio DACs and speaker amplifiers for audio playback. The second is the voice downlink path, including voice-band DACs and amplifiers, which produces voice signal to earphone or other auxiliary output device. Amplifiers in these two blocks are equipped with multiplexers to accept signals from internal audio/voice or external radio sources. The last is the voice uplink path, which is the interface between microphone (or other auxiliary input device) input and MT6228 DSP. A set of bias voltage is provided for external electret microphone..

MTK Confidential Release for Konka

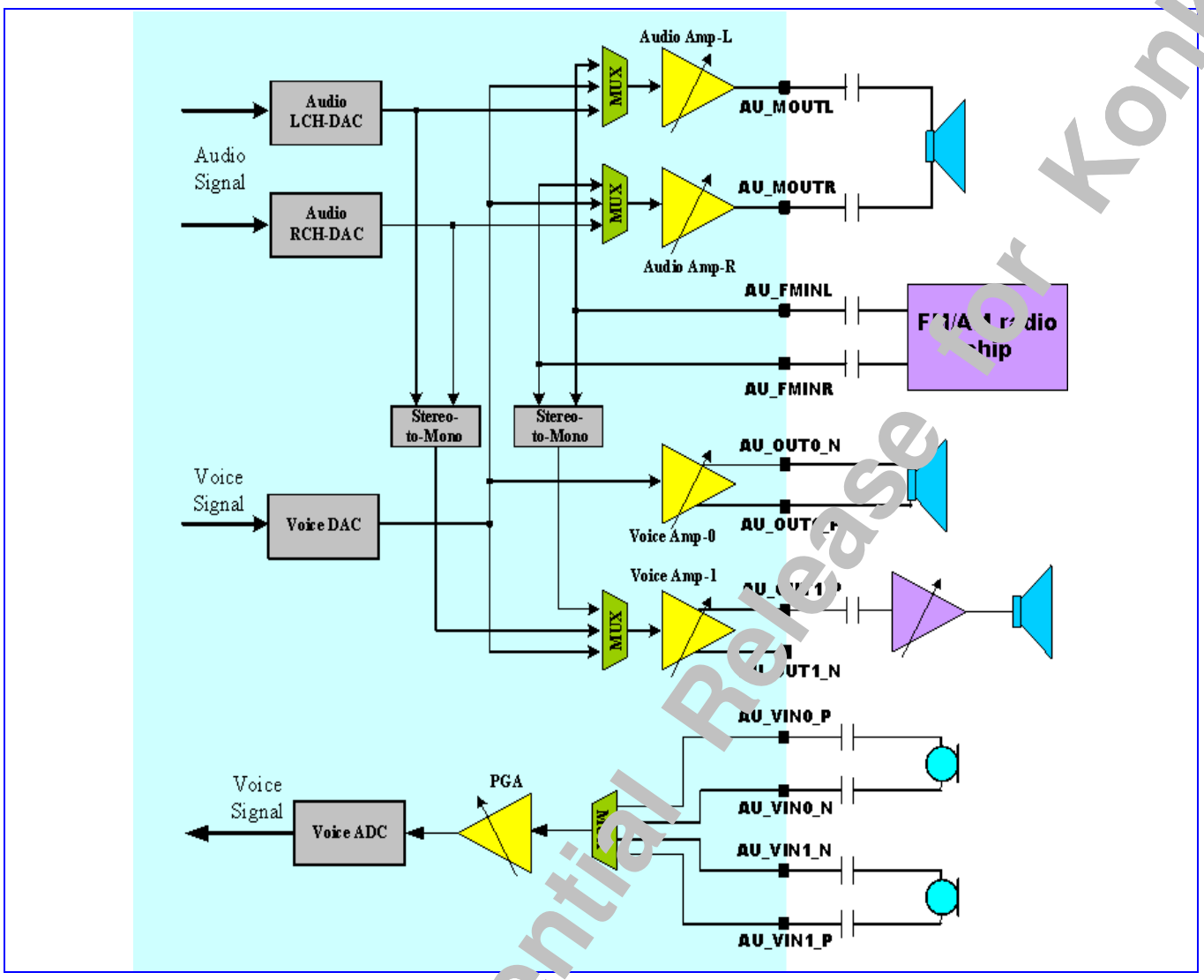

Figure 72 Block diagram of audio mixed-signal blocks.

12.1.6.2 Functional Specifications

The following table gives functional specifications of voice-band uplink/downlink blocks.

Symbol	Parameter	Min	Typical	Max	Unit
FS	Sampling Rate		4096		KHz
CREF	Decoupling Cap Between AU_VREF_P And AU_VREF_N		47		NF
DVDD	Digital Power Supply	1.6	1.8	2.0	V
AVDD	Analog Power Supply	2.5	2.8	3.1	V
T	Operating Temperature	-20		80	℃
IDC	Current Consumption		5		mA
VMIC	Microphone Biasing Voltage		1.9		V

MTK Confidential Release for Konka

IMIC	Current Draw From Microphone Bias Pins			2	mA
Uplink Path[4]					
SINAD	Signal to Noise and Distortion Ratio Input Level: -40 dbm0 Input Level: 0 dbm0	29	69		dB dB
RIN	Input Impedance (Differential)	13	20	27	KΩ
ICN	Idle Channel Noise			-67	dBm0
XT	Crosstalk Level			-66	dBm0
Downlink Path[5]					
SINAD	Signal to Noise and Distortion Ratio Input Level: -40 dBm0 Input Level: 0 dBm0	29	69		dB dB
RLOAD	Output Resistor Load (Differential)	28			Ω
CLOAD	Output Capacitor Load			200	pF
ICN	Idle Channel Noise of Transmit Path			-67	dBm0
XT	Crosstalk Level on Transmit Path			-66	dBm0

Table 73 Functional specifications of analog voice blocks

Functional specifications of the audio blocks are described in the following.

Symbol	Parameter	Min	Typical	Max	Unit
FCK	Clock Frequency		Fs*128		KHz
Fs	Sampling Rate	32	44.1	48	KHz
AVDD	Power Supply	2.6	2.8	3.1	V
T	Operating Temperature	-20		80	℃
IDC	Current Consumption		5		mA
PSNR	Peak Signal to Noise Ratio		80		dB
DR	Dynamic Range		80		dB
VOUT	Output Swing for 0dBFS Input Level		0.85		Vrms
THD	Total Harmonic Distortion			-40 -60	dB

[4] For uplink-path, not all gain setting of VUPG meets the specification listed on table, especially for the several highest gains. The maximum gain that meets the specification is to be determined.

[5] For downlink-path, not all gain setting of VDPG meets the specification listed on table, especially for the several lowest gains. The minimum gain that meets the specification is to be determined.

MTK Confidential Release for Konka

	45mW at 16 Ω Load 22mW at 32 Ω Load				dB
RLOAD	Output Resistor Load (Single-Ended)	16			Ω
CLOAD	Output Capacitor Load			200	pF
XT	L-R Channel Cross Talk			TBD	dB

Table 74 Functional specifications of the analog audio blocks

12.1.7 Clock Squarer

12.1.7.1 Block Descriptions

For most VCXO, the output clock waveform is sinusoidal with too small amplitude (about several hundred mV) to make MT6228 digital circuits function well. Clock squarer is designed to convert such a small signal to a rail-to-rail clock signal with excellent duty-cycle. It provides also a pull-down function when the circuit is powered-down.

12.1.7.2 Function Specifications

The functional specification of clock squarer is shown in Table 75.

Symbol	Parameter	Min	Typical	Max	Unit
Fin	Input Clock Frequency		13		MHz
Fout	Output Clock Frequency		13		MHz
Vin	Input Signal Amplitude		500	AVDD	mVpp
DcycIN	Input Signal Duty Cycle		50		%
DcycOUT	Output Signal Duty Cycle	DcycIN-5		DcycIN+5	%
TR	Rise Time on Pin CLKSQOUT			5	ns/pF
TF	Fall Time on Pin CLKSQOUT			5	ns/pF
DVDD	Digital Power Supply	1.3	1.5	1.7	V
AVDD	Analog Power Supply	2.5	2.8	3.1	V
T	Operating Temperature	-20		80	℃
	Current Consumption		TBD		MA

Table 75 The Functional Specification of Clock Squarer

12.1.7.3 Application Notes

Here below in the figure is an equivalent circuit of the clock squarer. Please be noted that the clock squarer is designed to accept a sinusoidal input signal. If the input signal is not sinusoidal, its harmonic distortion should be low enough to not produce a wrong clock output. As an reference, for a 13MHz sinusoidal signal input with amplitude of 0.2V the harmonic distortion should be smaller than 0.02V.

MTK Confidential Release for Konka

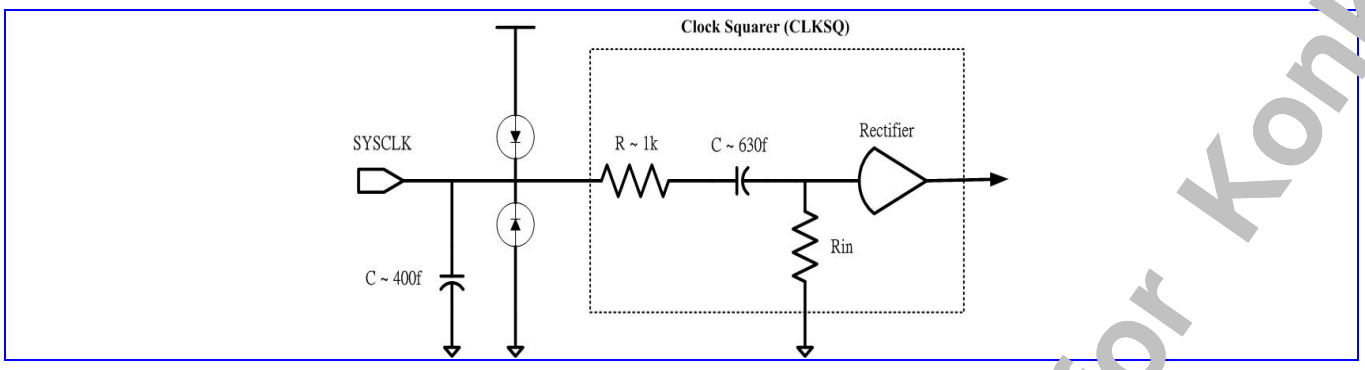

Figure 73 Equivalent circuit of Clock Squarer.

12.1.8 Phase Locked Loop

12.1.8.1 Block Descriptions

MT6228 includes three PLLs: DSP PLL, MCU PLL, and USB PLL. DSP PLL and MCU PLL are identical and programmable to provide either 52MHz or 78 MHz output clock while accepts 13MHz signal. USB PLL is designed to accept 4MHz input clock signal and provides 48MHz output clock.

12.1.8.2 Function Specifications

The functional specification of DSP/MCU PLL is shown in the following table.

Symbol	Parameter	Min	Typical	Max	Unit
Fin	Input Clock Frequency		13		MHz
Fout	Output Clock Frequency	52		78	MHz
	Lock-in Time		TBD		Ms
	Output Clock Duty Cycle	40	50	60	%
	Output Clock Jitter		650		ps
DVDD	Digital Power Supply	1.6	1.8	2.0	V
AVDD	Analog Power Supply	2.5	2.8	3.1	V
T	Operating Temperature	-20		80	℃
	Current Consumption		TBD		µA

Table 76 The Functional Specification of DSP/MCU PLL

The functional specification of USB PLL is shown below.

Symbol	Parameter	Min	Typical	Max	Unit
Fin	Input Clock Frequency		4		MHz
Fout	Output Clock Frequency		48		MHz
	Lock-in Time		TBD		µs
	Output Clock Duty Cycle	40	50	60	%
	Output Clock Jitter		650		ps

MTK Confidential Release for Konka

DVDD	Digital Power Supply	1.3	1.5	1.7	V
AVDD	Analog Power Supply	2.5	2.8	3.1	V
T	Operating Temperature	-20		80	℃
	Current Consumption		TBD		µA

Table 77 The Functional Specification of USB PLL

12.1.9 32-KHz Crystal Oscillator

12.1.9.1 Block Descriptions

The low-power 32-KHz crystal oscillator XOSC32 is designed to work with an external piezoelectric 32.768kHz crystal and a load composed of two functional capacitors, as shown in the following figure.

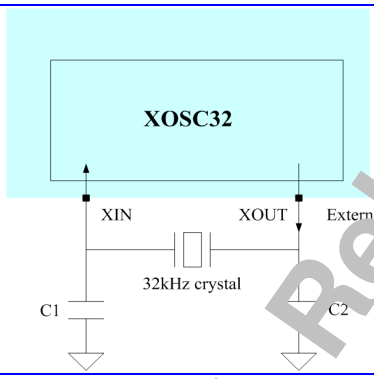

Figure 74 Block diagram of XOSC32

12.1.9.2 Functional specifications

The functional specification of XOSC32 is shown in the following table.

Symbol	Parameter	Min	Typical	Max	Unit
AVDDRTC	Analog power supply	1.08	1.2	1.65	V
Tosc	Start-up time			5	sec
Dcyc	Duty cycle		50		%
TR	Rise time on XOSCOUT		TBD		ns/pF
TF	Fall time on XOSCOUT		TBD		ns/pF
	Current consumption			5	µA
	Leakage current		1		µA
T	Operating temperature	-20		80	℃

Table 78 Functional Specification of XOSC32

Here below are a few recommendations for the crystal parameters for use with XOSC32.

Symbol	Parameter	Min	Typical	Max	Unit
F	Frequency range		32768		Hz

MTK Confidential Release for Konka

GL	Drive level			5	uW
Δf/f	Frequency tolerance		+/- 20		Ppm
ESR	Series resistance			50	KΩ
C0	Static capacitance			1.6	pF
CL[6]	Load capacitance	6		12.5	pF

Table 79 Recommended Parameters of the 32kHz crystal

12.2 MCU Register Definitions

12.2.1 BBRX

MCU APB bus registers for BBRX ADC are listed as followings.

MIXED+0300h BBRX ADC Analog-Circuit Control Register BBRX_AC_CON

Bit	15	14	13	12	11	10	9	8	7	6	5	4	3	2	1	0
Name					QSEL		ISEL		RSV	PDNCHP	GAIN	CALBIAS				
Type					R/W		R/W		R/W	R/W	R/W	R/W				
Reset					00		00		0	0	0	00000				

Set this register for analog circuit configuration controls.

CALBIAS The register field is for control of biasing current in BBRX mixed-signal module. It is coded in 2's complement. That is, its maximum is 15 and minimum is –16. Biasing current in BBRX mixed-signal module has impact on the performance of A/D conversion. The larger the value of the register field, the larger the biasing current in BBRX mixed-signal module, and the larger the SNR.

GAIN The register bit is for configuration of gain control of analog inputs in GSM RX mixed-signal module. When the bit is set to 1, gain control for analog inputs will be turned on and thus GSM RX mixed-signal module can provide higher resolutions. When the bit is set to 0, gain control for analog inputs will be turned off and thus GSM RX mixed-signal module can only provide lower resolutions.

- **0** Gain control for analog inputs in GSM RX mixed-signal module will be turned off.
- **1** Gain control for analog inputs in GSM RX mixed-signal module will be turned on.

PDNCHP Power down control for charge pumping of GSM RX ADC.

- **0** Power down charge pumping of GSM RX ADC.
- **1** Power up charge pumping of GSM RX ADC.

ISEL Loopback configuration selection for I-channel in BBRX mixed-signal module

- **00** Normal mode
- **01** Loopback TX analog I
- **10** Loopback TX analog Q
- **11** Select the grounded input

QSEL Loopback configuration selection for Q-channel in BBRX mixed-signal module

- **00** Normal mode

[6] CL is the parallel combination of C1 and C2 in the block diagram.

MTK Confidential Release for Konka

01 Loopback TX analog Q
10 Loopback TX analog I
11 Select the grounded input

12.2.2 BBTX

MCU APB bus registers for BBTX DAC are listed as followings.

MIXED+0400h BBTX DAC Analog-Circuit Control Register 0 — BBTX_AC_CON0

Bit	15	14	13	12	11	10	9	8	7	6	5	4	3	2	1	0
Name	CALRCDONE	STARTCALRC	GAIN			CALRCSEL			TRIMI				TRIMQ			
Type	R	R/W	R/W			R/W			R/W				R/W			
Reset	0	0	000			000			0000				0000			

Set this register for analog circuit configuration controls. The procedure to perform calibration processing for smoothing filter in BBTX mixed-signal module is as follows:

7. Write 1 to the register bit CARLC in the register TX_CON of Baseband Front End in order to activate clock required for calibration process. Initiate calibration process.
8. Write 1 to the register bit STARTCALRC. Start calibration process.
9. Read the register bit CALRCDONE. If read as 1, then calibration process finished. Otherwise repeat the step.
10. Write 0 to the register bit STARTCALRC. Stop calibration process.
11. Write 0 to the register bit CARLC in the register TX_CON of Baseband Front End in order to deactivate clock required for calibration process. Terminate calibration process.
12. The result of calibration process can be read from the register field CALRCOUT of the register BBTX_AC_CON1. Software can set the value to the register field CALRCSEL for 3-dB cutoff frequency selection of smoothing filter in DAC of BBTX.

Remember to set the register field CALRCCONT of the register BBTX_AC_CON1 to 0xb before the calibration process. It only needs to be set once.

TRIMQ The register field is used to control gain trimming of Q-channel DAC in BBTX mixed-signal module. It is coded in 2's complement, that is, with maximum 15 and minimum –16.

TRIMI The register field is used to control gain trimming of I-channel DAC in BBTX mixed-signal module. It is coded in 2's complement, that is, with maximum 15 and minimum –16.

CALRCSEL The register field is for selection of cutoff frequency of smoothing filter in BBTX mixed-signal module. It is coded in 2's complement. That is, its maximum is 3 and minimum is –4.

GAIN The register field is used to control gain of DAC in BBTX mixed-signal module. It has impact on both of I- and Q-channel DAC in BBTX mixed-signal module. It is coded in 2's complement, that is, with maximum 3 and minimum –4.

STARTCALRC Whenever 1 is writing to the bit, calibration process for smoothing filter in BBTX mixed-signal module will be triggered. Once the calibration process is completed, the register bit CARLDONE will be read as 1.

MTK Confidential Release for Konka

CALRCDONE The register bit indicates if calibration process for smoothing filter in BBTX mixed-signal module has finished. When calibration processing finishes, the register bit will be 1. When the register bit STARTCALRC is set to 0, the register bit becomes 0 again.

MIXED+0404h BBTX DAC Analog-Circuit Control Register 1 — BBTX_AC_CON1

Bit	15	14	13	12	11	10	9	8	7	6	5	4	3	2	1	0
Name	CALRCOUT			FLOAT	CALRCCNT				CALBIAS					CMV		
Type	R			R/W	R/W				R/W					R/W		
Reset	-			0	0000				00000					000		

Set this register for analog circuit configuration controls.

CMV The register field is used to control common voltage in BBTX mixed-signal module. It is coded in 2's complement, that is, with maximum 3 and minimum –4.

CALBIAS The register field is for control of biasing current in BBTX mixed-signal module. It is coded in 2's complement. That is, its maximum is 15 and minimum is –16. Biasing current in BBTX mixed-signal module has impact on performance of D/A conversion. Larger the value of the register field, the larger the biasing current in BBTX mixed-signal module.

CALRCCNT Parameter for calibration process of smoothing filter in BBTX mixed-signal module. Default value is eleven. Note that it is **NOT** coded in 2's complement. Therefore the range of its value is from 0 to 15. Remember to set it to 0xb before BBTX calibration process. It only needs to be set once.

FLOAT The register field is used to have the outputs of DAC in BBTX mixed-signal module float or not.

CALRCOUT After calibration processing for smoothing filter in BBTX mixed-signal module, a set of 3-bit value is obtained. It is coded in 2's complement.

12.2.3 AFC DAC

MCU APB bus registers for AFC DAC are listed as follows.

MIXED+0500h AFC DAC Analog-Circuit Control Register — AFC_AC_CON

Bit	15	14	13	12	11	10	9	8	7	6	5	4	3	2	1	0
Name									TEST		PDN_CHPUMP	CALI				
Type									R/W		R/W	R/W				
Reset									0		0	0				

Set this register for analog circuit configuration controls. Please refer to analog functional specification for more details.

TEST test control

PDN_CHPUMP charge pump power down

CALI biasing current control

12.2.4 APC DAC

MCU APB bus registers for APC DAC are listed as followings.

MTK Confidential Release for Konka

MIXED+0600h APC DAC Analog-Circuit Control Register APC_AC_CON

Bit	15	14	13	12	11	10	9	8	7	6	5	4	3	2	1	0
Name											BYP	CALI				
Type											R/W	R/W				
Reset											0	0				

Set this register for analog circuit configuration controls. Please refer to analog functional specification for more details.

BYP bypass output buffer

CALI biasing current control

12.2.5 Auxiliary ADC

MCU APB bus registers for AUX ADC are listed as followings.

MIXED+0700h Auxiliary ADC Analog-Circuit Control Register AUX_AC_CON

Bit	15	14	13	12	11	10	9	8	7	6	5	4	3	2	1	0
Name											CALI					
Type											R/W					
Reset											0					

Set this register for analog circuit configuration controls. Please refer to analog functional specification for more details.

CALI biasing current control

12.2.6 Voice Front-end

MCU APB bus registers for speech are listed as followings.

MIXED+0100h AFE Voice Analog Gain Control Register AFE_VAG_CON

Bit	15	14	13	12	11	10	9	8	7	6	5	4	3	2	1	0
Name				VUPG					VDPG0				VDPG1			
Type				R/W					R/W				R/W			
Reset				0000					0000				0000			

Set this register for analog PGA gains. VUPG is set for microphone input volume control. And VDPG0 and VDPG1 are set for two output volume controls

VUPG voice-band up-link PGA gain control bits

VCFG [2] ='0'		VCFG [2] ='1'	
VUPG [4:0]	Gain	VUPG [4:0]	Gain
11111	42 dB	XX111	-21dB
11110	40 dB	XX110	-18dB
11101	38 dB	XX101	-15dB
11100	36 dB	XX100	-12dB
11011	34 dB	XX011	-9dB
11010	32 dB	XX010	-6dB
11001	30 dB	XX001	-3dB

MTK Confidential Release for Korka

11000	28 dB	XX000	0dB
10111	26 dB		
10110	24 dB		
10101	22 dB		
10100	20 dB		
10011	18 dB		
10010	16 dB		
10001	14 dB		
10000	12 dB		
01111	10 dB		
01110	8 dB		
01101	6 dB		
01100	4 dB		
01011	2 dB		
01010	0 dB		
01001	-2 dB		
01000	-4 dB		
00111	-6 dB		
00110	-8 dB		
00101	-10 dB		
00100	-12 dB		
00011	-14 dB		
00010	-16 dB		
00001	-18 dB		
00000	-20 dB		

Table 80 Uplink PGA gain setting (VUPG [4:0])

VDPG0 voice-band down-link PGA0 gain control bits
VDPG1 voice-band down-link PGA1 gain control bits

VDPG0 [3:0] / VDPG1 [3:0]	Gain
1111	8dB
1110	6dB
1101	4dB
1100	2dB
1011	0dB
1010	-2dB
1001	-4dB
1000	-6dB
0111	-8dB

MTK Confidential Release for Konka

0110	-10dB
0101	-12dB
0100	-14dB
0011	-16dB
0010	-18dB
0001	-20dB
0000	-22dB

Table 81 Downlink power amplifier gain setting

MIXED+0104h AFE Voice Analog-Circuit Control Register 0 AFE_VAC_CON0

Bit	15	14	13	12	11	10	9	8	7	6	5	4	3	2	1	0
Name						VCFG				VDSEND		VCALI				
Type						R/W				R/W		R/W				
Reset						0000				00		00000				

Set this register for analog circuit configuration controls.

VCFG[3] microphone biasing control
- **0** differential biasing
- **1** single-ended biasing

VCFG[2] gain mode control
- **0** amplification
- **1** attenuation

VCFG[1] coupling control
- **0** AC
- **1** DC

VCFG[0] input select control
- **0** input 0
- **1** input 1

VDSEND[1] single-ended configuration control for out1

VDSEND[0] single-ended configuration control for out0

VCALI biasing current control, in 2's complement format

MIXED+0108h AFE Voice Analog-Circuit Control Register 1 AFE_VAC_CON1

Bit	15	14	13	12	11	10	9	8	7	6	5	4	3	2	1	0
Name				VBG_CTRL			VPDN_CHPUMP	VFLOAT	VRSDON	VRESSW	VBUF0SEL	VBUF1SEL			VADCINMODE	VDACINMODE
Type				R/W			R/W	R/W	R/W	R/W	R/W	R/W			R/W	R/W
Reset				000			0	0	0	0	0	000			0	0

Set this register for analog circuit configuration controls. There are several loop back modes and test modes implemented for test purposes. Suggested value is 0084h.

VBG_CTRL voice-band band-gap control

VPDN_CHPUMP voice-band charge pump power down

MTK Confidential Release for Konka

0: power down (normal operating mode)
1: charge pump on (for fab. process)

VFLOAT voice-band output driver float

0: normal operating mode
1: float mode

VRSDON voice-band redundant signed digit function on

0: 1-bit 2-level mode
1: 2-bit 3-level mode

VRESSW voice-band output buffer 1 output DC voltage control.

VBUF0SEL voice buffer 0 input selection (reserved.)

VBUF1SEL voice buffer 1 input selection

001: voice DAC output
010: external FM radio input
100: audio DAC output
OTHERS: reserved.

VADCINMODE Voice-band ADC output mode.

0: normal operating mode
1: the ADC input from the DAC output

VDACINMODE Voice-band DAC input mode.

0: normal operating mode
1: the DAC input from the ADC output

MIXED+010Ch AFE Voice Analog Power Down Control Register

AFE_VAPDN_CON

Bit	15	14	13	12	11	10	9	8	7	6	5	4	3	2	1	0
Name											VPDN_BIAS	VPDN_LNA	VPDN_ADC	VPDN_DAC	VPDN_OUT1	VPDN_OUT0
Type											R/W	R/W	R/W	R/W	R/W	R/W
Reset											0	0	0	0	0	0

Set this register to power up analog blocks. 0: power down, 1: power up.

VPDN_BIAS bias block
VPDN_LNA low noise amplifier block
VPDN_ADC ADC block
VPDN_DAC DAC block
VPDN_OUT1 OUT1 buffer block
VPDN_OUT0 OUT0 buffer block

MIXED+0110h AFE Voice AGC Control Register

AFE_VAGC_CON

Bit	15	14	13	12	11	10	9	8	7	6	5	4	3	2	1	0
Name			AGCTEST	RELNOIDURSEL		RELNOILEVSEL		FRELCKSEL		SRELCKSEL		ATTTHDCAL		ATTCKSEL	HYSTEREN	AGCEN
Type			R/W	R/W		R/W		R/W		R/W		R/W		R/W	R/W	R/W
Reset			0	00		00		00		00		00		0	0	0

MTK Confidential Release for Konka

Set this register for analog circuit configuration controls. There are several loop back modes and test modes implemented for test purposes. Suggested value is 0dcfh.

AGCEN AGC function enable

HYSTEREN AGC hysteresis function enable

ATTCKSEL attack clock selection

0: 16 KHz
1: 32 KHz

ATTTHDCAL attack threshold calibration

SRELCKSEL release slow clock selection

00: 1000/512 Hz
01: 1000/256 Hz
10: 1000/128 Hz
11: 1000/64 Hz

FRELCKSEL release fast clock selection

00: 1000/64 Hz
01: 1000/32 Hz
10: 1000/16 Hz
11: 1000/8 Hz

RELNOILEVSEL release noise level selection

00: -8 dB
01: -14 dB
10: -20 dB
11: -26 dB

RELNOIDURSEL release noise duration selection

00: 64 ms
01: 32 ms
10: 16 ms
11: 8 ms, 32768/4096

12.2.7 Audio Front-end

MCU APB bus registers for audio are listed as followings.

MIXED+0200h AFE Audio Analog Gain Control Register AFE_AAG_CON

Bit	15	14	13	12	11	10	9	8	7	6	5	4	3	2	1	0
Name							AMUTER	AMUTEL	APGR				APGL			
Type							R/W	R/W	R/W				R/W			
Reset							0	0	0000				0000			

Set this register for analog PGA gains.

AMUTER audio PGA L-channel mute control

AMUTEL audio PGA R-channel mute control

MTK Confidential Release for Konka

APGR audio PGA R-channel gain control
APGL audio PGA L-channel gain control

MIXED+0204h AFE Audio Analog-Circuit Control Register AFE_AAC_CON

Bit	15	14	13	12	11	10	9	8	7	6	5	4	3	2	1	0
Name					ARCON	ABUFSELR			ABUFSELL			ACALI				
Type					R/W	R/W			R/W			R/W				
Reset					0	000			000			00000				

Set this register for analog circuit configuration controls.

ARCON audio external RC control
ABUFSELR audio buffer R-channel input selection
- **000**: audio DAC R/L-channel output; stereo to mono
- **001**: audio DAC R-channel output
- **010**: voice DAC output
- **100**: external FM R/L-channel radio output, stereo to mono
- **101**: external FM R-channel radio output
- **OTHERS**: reserved.

ABUFSELL audio buffer L-channel input selection
- **000**: audio DAC R/L-channel output; stereo to mono
- **001**: audio DAC L-channel output
- **010**: voice DAC output
- **100**: external FM R/L-channel radio output, stereo to mono
- **101**: external FM L-channel radio output
- **OTHERS**: reserved.

ACALI audio bias current control, in 2's complement format

MIXED+0208h AFE Audio Analog Power Down Control Register AFE_AAPDN_CON

Bit	15	14	13	12	11	10	9	8	7	6	5	4	3	2	1	0
Name						ACNR						APDN_BIAS	APDN_DACR	APDN_DACL	APDN_OUTR	APDN_OUTL
Type						R/W						R/W	R/W	R/W	R/W	R/W
Reset						000000						0	0	0	0	0

Set this register to power up analog blocks. 0: power down, 1: power up. Suggested value is 00ffh.

ACNR audio click noise reduction
APDN_BIAS BIAS block
APDN_DACR R-channel DAC block
APDN_DACL L-channel DAC block
APDN_OUTR R-channel OUT buffer block
APDN_OUTL L-channel OUT buffer block

MTK Confidential Release for Konka

12.2.8 Reserved

Some registers are reserved for further extensions.

MIXED+0800h Reserved 0 Analog Circuit Control Register 0 — RES0_AC_CON 0

Bit	15	14	13	12	11	10	9	8	7	6	5	4	3	2	1	0
Name																
Type	R/W	R/W	R/W	R/W	R/W	R/W	R/W	R/W	R/W	R/W	R/W	R/W	R/W	R/W	R/W	R/W
Reset	0	0	0	0	0	0	0	0	0	0	0	0	0	0	0	0

MIXED+0804h Reserved 0 Analog Circuit Control Register 1 — RES0_AC_CON 1

Bit	15	14	13	12	11	10	9	8	7	6	5	4	3	2	1	0
Name																
Type	R/W	R/W	R/W	R/W	R/W	R/W	R/W	R/W	R/W	R/W	R/W	R/W	R/W	R/W	R/W	R/W
Reset	0	0	0	0	0	0	0	0	0	0	0	0	0	0	0	0

MIXED+0900h Reserved 1 Analog Circuit Control Register 0 — RES1_AC_CON 0

Bit	15	14	13	12	11	10	9	8	7	6	5	4	3	2	1	0
Name																
Type	R/W	R/W	R/W	R/W	R/W	R/W	R/W	R/W	R/W	R/W	R/W	R/W	R/W	R/W	R/W	R/W
Reset	0	0	0	0	0	0	0	0	0	0	0	0	0	0	0	0

MIXED+0904h Reserved 1 Analog Circuit Control Register 1 — RES1_AC_CON 1

Bit	15	14	13	12	11	10	9	8	7	6	5	4	3	2	1	0
Name																
Type	R/W	R/W	R/W	R/W	R/W	R/W	R/W	R/W	R/W	R/W	R/W	R/W	R/W	R/W	R/W	R/W
Reset	0	0	0	0	0	0	0	0	0	0	0	0	0	0	0	0

MIXED+0A00h Reserved 2 Analog Circuit Control Register 0 — RES2_AC_CON 0

Bit	15	14	13	12	11	10	9	8	7	6	5	4	3	2	1	0
Name																
Type	R/W	R/W	R/W	R/W	R/W	R/W	R/W	R/W	R/W	R/W	R/W	R/W	R/W	R/W	R/W	R/W
Reset	0	0	0	0	0	0	0	0	0	0	0	0	0	0	0	0

MIXED+0A04h Reserved 2 Analog Circuit Control Register 1 — RES2_AC_CON 1

Bit	15	14	13	12	11	10	9	8	7	6	5	4	3	2	1	0
Name																
Type	R/W	R/W	R/W	R/W	R/W	R/W	R/W	R/W	R/W	R/W	R/W	R/W	R/W	R/W	R/W	R/W
Reset	0	0	0	0	0	0	0	0	0	0	0	0	0	0	0	0

MTK Confidential Release for Konka

MIXED+0B00h Reserved 3 Analog Circuit Control Register 0 RES3_AC_CON0

Bit	15	14	13	12	11	10	9	8	7	6	5	4	3	2	1	0
Name																
Type	R/W	R/W	R/W	R/W	R/W	R/W	R/W	R/W	R/W	R/W	R/W	R/W	R/W	R/W	R/W	R/W
Reset	0	0	0	0	0	0	0	0	0	0	0	0	0	0	0	0

MIXED+0B04h Reserved 3 Analog Circuit Control Register 1 RES3_AC_CON1

Bit	15	14	13	12	11	10	9	8	7	6	5	4	3	2	1	0
Name																
Type	R/W	R/W	R/W	R/W	R/W	R/W	R/W	R/W	R/W	R/W	R/W	R/W	R/W	R/W	R/W	R/W
Reset	0	0	0	0	0	0	0	0	0	0	0	0	0	0	0	0

MIXED+0C00h Reserved 4 Analog Circuit Control Register 0 RES4_AC_CON0

Bit	15	14	13	12	11	10	9	8	7	6	5	4	3	2	1	0
Name																
Type	R/W	R/W	R/W	R/W	R/W	R/W	R/W	R/W	R/W	R/W	R/W	R/W	R/W	R/W	R/W	R/W
Reset	0	0	0	0	0	0	0	0	0	0	0	0	0	0	0	0

MIXED+0C04h Reserved 4 Analog Circuit Control Register 1 RES4_AC_CON1

Bit	15	14	13	12	11	10	9	8	7	6	5	4	3	2	1	0
Name																
Type	R/W	R/W	R/W	R/W	R/W	R/W	R/W	R/W	R/W	R/W	R/W	R/W	R/W	R/W	R/W	R/W
Reset	0	0	0	0	0	0	0	0	0	0	0	0	0	0	0	0

MIXED+0D00h Reserved 5 Analog Circuit Control Register 0 RES5_AC_CON0

Bit	15	14	13	12	11	10	9	8	7	6	5	4	3	2	1	0
Name																
Type	R/W	R/W	R/W	R/W	R/W	R/W	R/W	R/W	R/W	R/W	R/W	R/W	R/W	R/W	R/W	R/W
Reset	0	0	0	0	0	0	0	0	0	0	0	0	0	0	0	0

MIXED+0D04h Reserved 5 Analog Circuit Control Register 1 RES5_AC_CON1

Bit	15	14	13	12	11	10	9	8	7	6	5	4	3	2	1	0
Name																
Type	R/W	R/W	R/W	R/W	R/W	R/W	R/W	R/W	R/W	R/W	R/W	R/W	R/W	R/W	R/W	R/W
Reset	0	0	0	0	0	0	0	0	0	0	0	0	0	0	0	0

MIXED+0E00h Reserved 6 Analog Circuit Control Register 0 RES6_AC_CON0

Bit	15	14	13	12	11	10	9	8	7	6	5	4	3	2	1	0
Name																
Type	R/W	R/W	R/W	R/W	R/W	R/W	R/W	R/W	R/W	R/W	R/W	R/W	R/W	R/W	R/W	R/W
Reset	0	0	0	0	0	0	0	0	0	0	0	0	0	0	0	0

MTK Confidential Release for Korka

MIXED+0E04h Reserved 6 Analog Circuit Control Register 1 RES6_AC_CON1

Bit	15	14	13	12	11	10	9	8	7	6	5	4	3	2	1	0
Name																
Type	R/W	R/W	R/W	R/W	R/W	R/W	R/W	R/W	R/W	R/W	R/W	R/W	R/W	R/W	R/W	R/W
Reset	0	0	0	0	0	0	0	0	0	0	0	0	0	0	0	0

MIXED+0F00h Reserved 7 Analog Circuit Control Register 0 RES7_AC_CON0

Bit	15	14	13	12	11	10	9	8	7	6	5	4	3	2	1	0
Name																
Type	R/W	R/W	R/W	R/W	R/W	R/W	R/W	R/W	R/W	R/W	R/W	R/W	R/W	R/W	R/W	R/W
Reset	0	0	0	0	0	0	0	0	0	0	0	0	0	0	0	0

MIXED+0F04h Reserved 7 Analog Circuit Control Register 1 RES7_AC_CON1

Bit	15	14	13	12	11	10	9	8	7	6	5	4	3	2	1	0
Name																
Type	R/W	R/W	R/W	R/W	R/W	R/W	R/W	R/W	R/W	R/W	R/W	R/W	R/W	R/W	R/W	R/W
Reset	0	0	0	0	0	0	0	0	0	0	0	0	0	0	0	0

12.3 Programming Guide

12.3.1 BBRX Register Setup

The register used to control analog base-band receiver is BBRX_AC_CON.

12.3.1.1 Programmable Biasing Current

To maximize the yield in modern digital process, the receiver features providing 5-bit 32-level programmable current to bias internal analog blocks. The 5-bits registers CALBIAS [4:0] is coded with 2's complement format.

12.3.1.2 Offset / Gain Calibration

The base-band downlink receiver (RX), together with the base-band uplink transmitter (TX) introduced in the next section, provides necessary analog hardware for DSP algorithm to correct the mismatch and offset error. The connection for measurement of both RX/TX mismatch and gain error is shown in **Figure** 75, and the corresponding calibration procedure is described below.

MTK Confidential Release for Korka

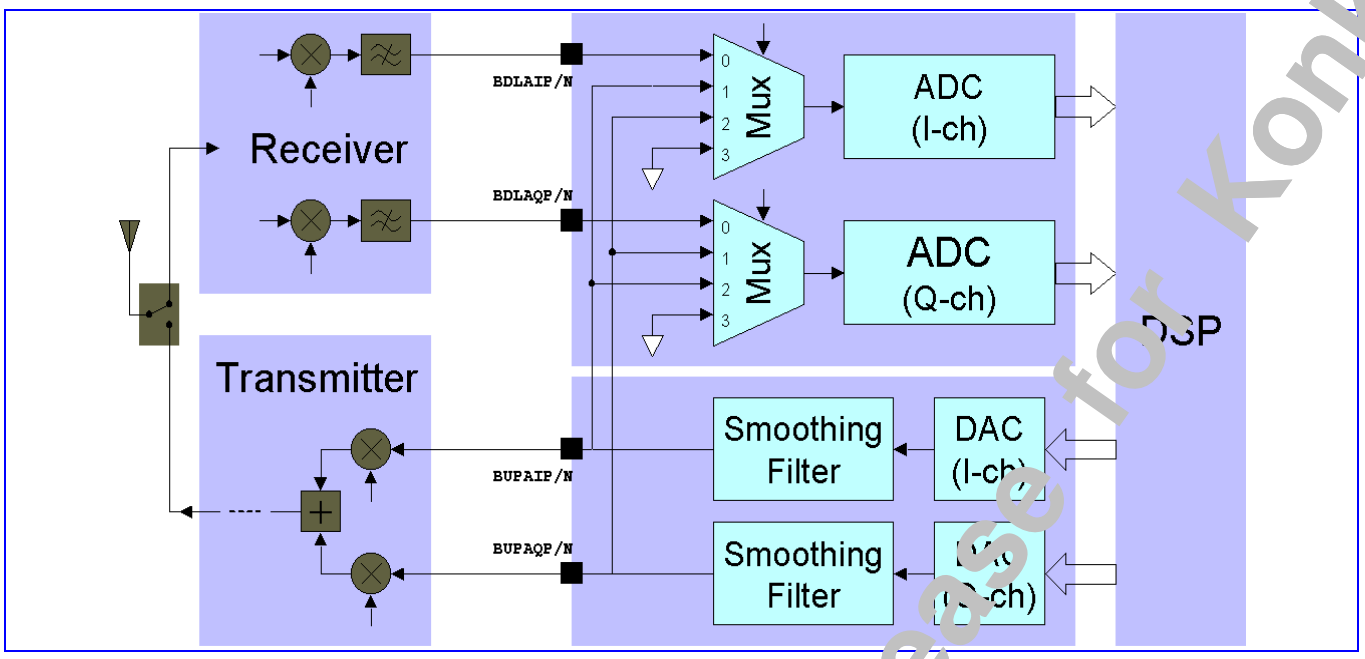

Figure 75 Base-band A/D and D/A Offset and Gain Calibration

12.3.1.3 Downlink RX Offset Error Calibration

The RX offset measurement is achieved by selecting grounded input to A/D converter (set ISEL [1:0] ='11' and QSEL [1:0] ='11' to select channel 3 of the analog input multiplexer, as shown in **Figure** 76. The output of the ADC is sent to DSP for further offset cancellation. The offset cancellation accuracy depends on the number of samples being converted. That is, more accurate measurement can be obtained by collecting more samples followed by averaging algorithm.

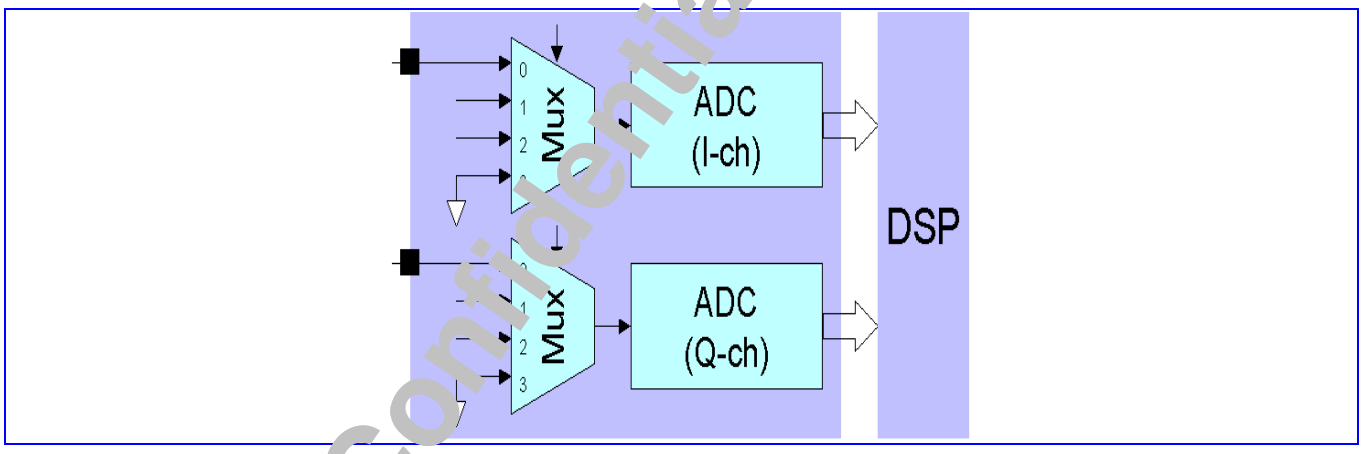

Figure 76 Downlink ADC Offset Error Measurement

12.3.1.4 Downlink RX and Uplink TX Gain Error Calibration

To measure the gain mismatch error, both I/Q uplink TXs should be programmed to produce full-scale pure sinusoidal waves output. Such signals are then fed to downlink RX for A/D conversion, in the following two steps.

MTK Confidential Release for Konka

A. The uplink I-channel output are connected to the downlink I-channel input, and the uplink Q-channel output are connected to the downlink Q-channel input. This can be achieved by setting ISEL [1:0] ='01' and QSEL [1:0] ='01' (shown in **Figure** 77 (A))..

B. The uplink I-channel output are then connected to the downlink Q-channel input, and the uplink Q-channel output are connected to the downlink I-channel input. This can be achieved by setting ISEL [1:0] ='10' and QSEL [1:0] ='10' (shown in **Figure** 77 (B)).

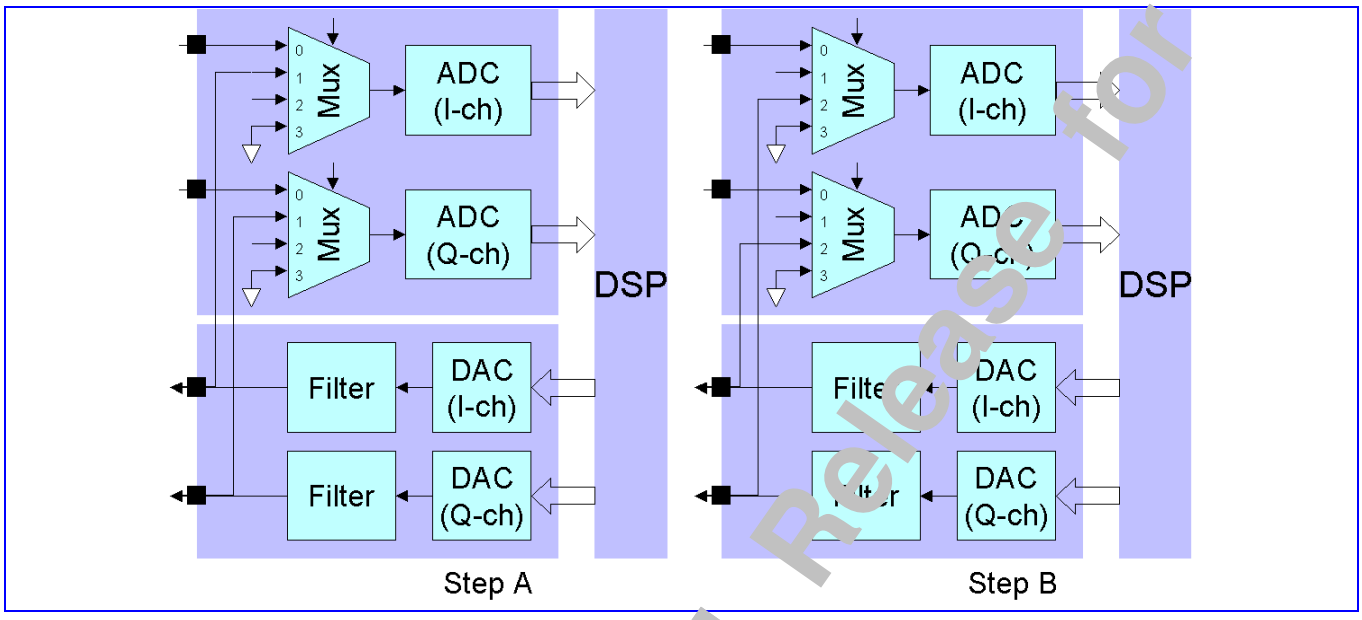

Figure 77 Downlink RX and Up-link TX Gain Mismatch Measurement (A) I/Q TX connect to I/Q RX (B) I/Q TX connect to Q/I RX

Once above successive procedures are completed, RX/TX gain mismatch could be easily obtained because the amplitude mismatch on RX digitized result in step A and B is the sum and difference of RX and TX gain mismatch, respectively.

The gain error of the downlink RX can be corrected in the DSP section and the uplink TX gain error can be corrected by the gain trimming facility that TX block provide.

12.3.1.5 Uplink TX Offset Error Calibration

Once the offset of the downlink RX is known and corrected, the offset of the uplink TX alone could be easily estimated. The offset error of TX should be corrected in the digital domain by means of the programmable feature of the digital GMSK modulator.

Finally, it is important that above three calibration procedures should be exercised in order, that is, correct the RX offset first, then RX/TX gain mismatch, and finally TX offset. This is owing to that analog gain calibration in TX will affect its offset, while the digital offset correction has no effect on gain.

12.3.2 BBTX Register Setup

The register used to control analog base-band transmitter is BBTX_AC_CON0 and BBTX_AC_CON1.

MTK Confidential Release for Konka

12.3.2.1 Output Gain Control

The output swing of the uplink transmitter is controlled by register GAIN [2:0] coded in 2's complement with about 2dB step. When TRIMI [3:0] / TRIMQ [3:0] = 0 the swing is listed in **Table** 82, defined to be the difference between positive and negative output signal.

GAIN [2:0]	Output Swing	For AVDD=2.8 (V)
+3 (011)	AVDD*0.900 (+6.02 dB)	2.52
+2 (010)	AVDD*0.720 (+4.08 dB)	2.02
+1 (001)	AVDD*0.576 (+2.14 dB)	1.61
+0 (000)	AVDD*0.450 (+0.00 dB)	1.26
-1 (111)	AVDD*0.360 (-1.94 dB)	1
-2 (110)	AVDD*0.288 (-3.88 dB)	0.81
-3 (101)	AVDD*0.225 (-6.02 dB)	0.63
-4 (100)	AVDD*0.180 (-7.95 dB)	0.5

Table 82 Output Swing Control Table

12.3.2.2 Output Gain Trimming

I/Q channels can also be trimmed separately to compensate gain mismatch in the base-band transmitter or the whole transmission path including RF module. The gain trimming is adjusted in 16 steps spread from –1.18dB to +1.18dB (**Table** 83), compared to the full-scale range set by GAIN [2:0].

TRIMI [3:0] / TRIMQ [3:0]	Gain Step (dB)
+7 (0111)	1.18
+6 (0110)	1.00
+5 (0101)	0.83
+4 (0100)	0.66
+3 (0011)	0.49
+2 (0010)	0.32
+1 (0001)	0.16
+0 (0000)	0.00
-1 (1111)	-0.16
-2 (1110)	-0.31
-3 (1101)	-0.46
-4 (1100)	-0.61
-5 (1011)	-0.75
-6 (1010)	-0.90
-7 (1001)	-1.04

MTK Confidential Release for Konka

-8 (1000)	-1.18

Table 83 Gain Trimming Control Table

12.3.2.3 Output Common-Mode Voltage

The output common-mode voltage is controlled by CMV [2:0] with about 0.08*AVDD step, as listed in the following table.

CMV [2:0]	Common-Mode Voltage
+3 (011)	AVDD*0.62
+2 (010)	AVDD*0.58
+1 (001)	AVDD*0.54
+0 (000)	AVDD*0.50
-1 (111)	AVDD*0.46
-2 (110)	AVDD*0.42
-3 (101)	AVDD*0.38
-4 (100)	AVDD*0.34

Table 84 Output Common-Mode Voltage Control Table

12.3.2.4 Programmable Biasing Current

The transmitter features providing 5-bit 32-level programmable current to bias internal analog blocks. The 5-bits registers CALBIAS [4:0] is coded with 2's complement format.

12.3.2.5 Smoothing Filter Characteristic

The 2nd –order Butterworth smoothing filter is used to suppress the image at DAC output: it provides more than 40dB attenuation at the 4.44MHz sampling frequency. To tackle with the digital process component variation, programmable cutoff frequency control bits CALRCSEL [2:0] are included. User can directly change the filter cut-off frequency by different CALRCSEL value (coded with 2's complement format and with a default value 0). In addition, an internal calibration process is provided, by setting START CALRC to high and CALRCCNT to an appropriate value (default is 11). After the calibration process, the filter cut-off frequency is calibrated to 350kHz +/- 50 kHz and a new CALRCOUT value is stored in the register. During the calibration process, the output of the cell is high-impedance.

12.3.3 AFC-DAC Register Setup

The register used to control the APC DAC is AFC_AC_CON, which providing 5-bit 32-level programmable current to bias internal analog blocks. The 5-bits registers CALI [4:0] is coded with 2's complement format.

12.3.4 APC-DAC Register Setup

The register used to control the APC DAC is AFC_AC_CON, which providing 5-bit 32-level programmable current to bias internal analog blocks. The 5-bits registers CALI [4:0] is coded with 2's complement format.

12.3.5 Auxiliary A/D Conversion Register Setup

The register used to control the Aux-ADC is AUX_AC_CON. For this register, which providing 5-bit 32-level

MTK Confidential Release for Konka

programmable current to bias internal analog blocks. The 5-bits registers CALI [4:0] is coded with 2's complement format.

12.3.6 Voice-band Blocks Register Setup

The registers used to control AMB are AFE_VAG_CON, AFE_VAC_CON0, AFE_VAC_CON1, and AFE_VAPDN_CON. For these registers, please refer to chapter "Analog Chip Interface"

12.3.6.1 Reference Circuit

The voice-band blocks include internal bias circuits, a differential bandgap voltage reference circuit and a differential microphone bias circuit. Internal bias current could be calibrated by varying VCALI[4:0] (coded with 2's complement format).

The differential bandgap circuit generates a low temperature dependent voltage for internal use. For proper operation, there should be an external 47nF capacitor connected between differential output pins AU_VREFP and AU_VREFN. The bandgap voltage (~1.24V[7], typical) also defines the dBm0 reference level through out the audio mixed-signal blocks**.** The following table illustrates typical 0dBm0 voltage when uplink/downlink programmable gains are unity. For other gain setting, 0dBm0 reference level should be scaled accordingly.

Symbol	Parameter	Min	Typical	Max	Unit
$V_{0dBm0,UP}$	0dBm0 Voltage for Uplink Path, Applied Differentially Between Positive and Negative Microphone Input Pins		0.2V		V-rms
$V_{0dBm0,Dn}$	0dBm0 voltage for Downlink Path, Appeared Differentially Between Positive and Negative Power Amplifier Output Pins		0.6V		V-rms

Table 85 0dBm0 reference level for unity uplink/downlink gain

The microphone bias circuit generates a differential output voltage between AU_MICBIAS_P and AU_MICBIAS_N for external electret type microphone. Typical output voltage is 1.9 V. In singled-ended mode, by set VCFG[3] =1, AU_MICBIAS_N is pull down while output voltage is present on AU_MICBIAS_P, respect to ground. The max current supplied by microphone bias circuit is 2mA.

12.3.6.2 Uplink Path

Uplink path of voice-band blocks includes an uplink programmable gain amplifier and a sigma-delta modulator.

12.3.6.2.1 Uplink Programmable Gain Amplifier

Input to the PGA is a multiplexer controlled by VCFG [3:0], as described in the following table. In normal operation, both input AC and DC coupling are feasible for attenuation the input signal (gain <= 0dB). However, only AC coupling is suggested if amplification of input signal is desired (gain>=0dB).

Control	Function	Descriptions

[7] The bandgap voltage could be calibrated by adjusting control signal VBG_CTRL[1:0]. Its default value is [00]. VBG_CTRL not only adjust the bandgap voltage but also vary its temperature dependence. Optimal value of VBG_CTRL is to be determined.

MTK Confidential Release for Konka

Signal		
VCFG [0]	Input Selector	0: Input 0 (From AU_VIN0_P / AU_VIN0_N) Is Selected 1: Input 1 (From AU_VIN1_P / AU_VIN1_N) Is Selected
VCFG [1]	Coupling Mode	0: AC Coupling 1: DC Coupling
VCFG [2]	Gain Mode	0: Amplification Mode (gain >= 0 dB) 1: Attenuation Mode (gain <= 0dB)
VCFG [3]	Microphone Biasing	0: Differential Biasing (Take Bias Voltage Between AU_MICBIAS_P and AU_MICBIAS_N) 1: Signal-Ended Biasing (Take Bias Voltage From AU_MICBIAS_P Respected to Ground. AU_MICBIAS_N Is Connected to Ground)

Table 86 Uplink PGA input configuration setting

The PGA itself provides programmable gain (through VUPG [3:0]) with step of 3dB, as listed in the following table.

VCFG [2] ='0'		VCFG [2] ='1'	
VUPG [3:0]	Gain	VUPG [3:0]	Gain
1111	NA	X111	-21dB
1110	42dB	X110	-18dB
1101	39dB	X101	-15dB
1100	36dB	X100	-12dB
1011	33dB	X011	-9dB
1010	30dB	X010	-6dB
1001	27dB	X001	-3dB
1000	24dB	X000	0dB
0111	21dB		
0110	18dB		
0101	15dB		
0100	12dB		
0011	9dB		
0010	6dB		
0001	3dB		
0000	0dB		

Table 87 Uplink PGA gain setting (VUPG [3:0])

The following table illustrates typically the 0dBm0 voltage applied at the microphone inputs, differentially, for several gain settings.

VCFG [2] ='0'		VCFG [2] ='1'	
VUPG [3:0]	0dBm0 (V-rms)	VUPG [3:0]	0dBm0 (V-rms)
1100	3.17mV	X110	1.59V
1000	12.6mV	X100	0.8V

MTK Confidential Release for Konka

0100	50.2mV	X010	0.4V
0000	0.2V	X000	0.2V

Table 88 0dBm0 voltage at microphone input pins

12.3.6.2.2 Sigma-Delta Modulator

Analog-to-digital conversion in uplink path is made with a second-order sigma-delta modulator (SDM) whose sampling rate is 4096kHz. Output signals are coded in either one-bit or RSD format, optionally controlled by VRSDON register.

For test purpose, one can set VADCINMODE to HI to form a look-back path from downlink DAC output to SDM input. The default value of VADCINMODE is zero.

12.3.6.3 Downlink Path

Downlink path of voice-band blocks includes a digital to analog converter (DAC) and two programmable output power amplifiers.

12.3.6.3.1 Digital to Analog Converter

The DAC converts input bit-stream to analog signal by sampling rate of 4096kHz. . Besides, it performs a 2nd-order 40kHz butterworth filtering. The DAC receives input signals from MT6228 DSP by set VDACINMODE = 0. It can also take inputs from SDM output by setting VDACINMODE = 1.

12.3.6.3.2 Downlink Programmable Power Amplifier

Voice-band analog blocks include two identical output power amplifiers with programmable gain. Amplifier 0 and amplifier 1 can be configured to either differential or single-ended mode by adjusting VDSEND [0] and VDSEND [1], respectively. In single-ended mode, when VDSEND[0] =1, output signal is present at AU_VOUT0_P pin respect to ground. Same as VDSEND[1] for AU_VOUT1_P pin.

For the amplifier itself, programmable gain setting is described in the following table.

VDPG0 [3:0] / VDPG1 [3:0]	Gain
1111	8dB
1110	6dB
1101	4dB
1100	2dB
1011	0dB
1010	-2dB
1001	-4dB
1000	-6dB
0111	-8dB
0110	-10dB
0101	-12dB
0100	-14dB
0011	-16dB

MTK Confidential Release for Konka

0010	-18dB
0001	-20dB
0000	-22dB

Table 89 Downlink power amplifier gain setting

Control signal VFLOAT, when set to 'HI', is used to make output nodes totally floating in power down mode. If VFLOAT is set to 'LOW" in power down mode, there will be a resistor of 50k ohm (typical) between AU_VOUT0_P and AU_VOUT0_N, as well as between AU_VOUT0_P and AU_VOUT0_N.

The amplifiers deliver signal power to drive external earphone. The minimum resistive load is 28 ohm and the upper limit of the output current is 50mA. On the basis that 3.14dBm0 digital input signal into downlink path produces DAC output differential voltage of 0.87V-rms (typical), the following table illustrates the power amplifier output signal level (in V-rms) and signal power for an external 32 ohm resistive load.

VDPG	Output Signal Level (V-rms)	Output Signal Power (mW / dBm)
0010	0.11	0.37/-4.3
0110	0.27	2.28/3.6
1010	0.69	14.8/11.7
1110	1.74	94.6/19.8

Table 90 Output signal level/power for 3.14dBm0 input. External resistive load = 32 ohm

The following table illustrates the output signal level and power for different resistive load when VDPG =1110.

RLOAD	Output Signal Level (V-rms)	Output Signal Power (mW / dBm)
30	1.74	101/20
100	1.74	30.3/14.8
600	1.74	5/7

Table 91 Output signal level/power for 3.14dBm0 input, VDPG =1110

12.3.6.4 Power Down Control

Each block inside audio mixed-signal blocks features dedicated power-down control, as illustrated in the following table.

Control Signal	Descriptions
VPDN_BIAS	Power Down Reference Circuits (Active Low)
VPDN_LNA	Power Down Uplink PGA (Active Low)
VPDN_ADC	Power Down Uplink SDM (Active Low)
VPDN_DAC	Power Down DAC (Active Low)
VPDN_OUT0	Power Down Downlink Power Amp 0 (Active Low)
VPDN_OUT1	Power Down Downlink Power Amp 1 (Active Low)

MTK Confidential Release for Konka

Table 92 Voice-band blocks power down control

12.3.7 Audio-band Blocks Register Setup

The registers used to control audio blocks are AFE_AAG_CON, AFE_AAC_CON, and AFE_AAPDN_CON. For these registers, please refer to chapter "Analog Chip Interface"

12.3.7.1 Output Gain Control

Audio blocks include stereo audio DACs and programmable output power amplifiers. The DACs convert input bit-stream to analog signal by sampling rate of Fs*128 where Fs could be 32kHz, 44.1kHz, or 48kHz. Besides, it performs a 2nd-order butterworth filtering. The two identical output power amplifiers with programmable gain are designed to driving external AC-coupled single-end speaker. The minimum resistor load is 16 ohm and the maximum driving current is 50mA. The programmable gain setting, controlled by APGR[] and APGL[], is the same as that of the voice-band amplifiers.

Unlike voice signals, 0dBFS defines the full-scale audio signals amplitude. Based on bandgap reference voltage again, the following table illustrates the power amplifier output signal level (in V-rms) and signal power for an external 16 ohm resistive load.

APGR[]/ APGL[]	Output Signal Level (V-rms)	Output Signal Power (mW / dBm)
0010	0.055	0.19/-7.2
0110	0.135	1.14/0.6
1010	0.345	7.44/8.7
1110	0.87	47.3/16.7

Table 93 Output signal level/power for 0dBFS input. External resistive load = 16 ohm

12.3.7.2 Mute Function and Power Down Control

By setting AMUTER (AMUTEL) to high, right (Left) channel output will be muted.

Each block inside audio mixed-signal blocks features dedicated power-down control, as illustrated in the following table.

Control Signal	Descriptions
APDN_BIAS	Power Down Reference Circuits (Active Low)
APDN_DACL	Power Down L-Channel DAC (Active Low)
APDN_DACR	Power Down R-Channel DAC (Active Low)
APDN_OUTL	Power Down L-Channel Audio Amplifier (Active Low)
APDN_OUTR	Power Down R-Channel Audio Amplifier (Active Low)

Table 94 Audio-band blocks power down control

12.3.8 Multiplexers for Audio and Voice Amplifiers

The audio/voice amplifiers feature accepting signals from various signal sources including AU_FMINR/AU_FMINL pins, that aimed to receive stereo AM/FM signal from external radio chip:

1) Voice-band amplifier 0 accepts signals from voice DAC output only.

MTK Confidential Release for Konka

2) Voice-band amplifier 1 accepts signal from either voice DAC, audio DAC, or AM/FM radio input pins (controlled by register VBUF1SEL[]). For the last two cases, left and right channel signals will be summed together to form a mono signal first.

3) Audio left/right channel amplifiers receive signals from either voice DAC, audio DAC, or AM/FM radio input pins (controlled by registers ABUFSELL[] and ABUFSELR[]), too. Left and right channel amplifiers will produce identical output waveforms when receiving mono signals from voice DAC.

12.3.9 Clock Squarer Register Setup

The register used to control clock squarer is CLK_CON. For this register, please refer to chapter "Clocks"

CLKSQ_PLD is used to bypass the clock squarer.

12.3.10 Phase-Locked Loop Register Setup

For registers control the PLL, please refer to chapter "Clocks" and "Software Power Down Control"

12.3.10.1 Frequency Setup

The DSP/MCU PLL itself could be programmable to output either 52MHz or 78MHz clocks. Accompanied with additional digital dividers, 13/26/39/52/65/78 MHz clock outputs are supported.

12.3.10.2 Programmable Biasing Current

The PLLs feature providing 5-bit 32-level programmable current to bias internal analog blocks. The 5-bits registers CALI [4:0] is coded with 2's complement format.

12.3.11 32-khz Crystal Oscillator Register Setup

For registers that control the oscillator, please refer to chapter "Real Time Clock" and "Software Power Down Control".

XOSCCALI[4:0] is the calibration control registers of the bias current, and is coded with 2's complement format.

[1] CL is the parallel combination of C1 and C2 in the block diagram.

MTK Confidential Release for Konka

13 Digital Pin Electrical Characteristics

- **Based on I/O power supply (VDD33) = 3.3 V**
- **Vil (max) = 0.8 V**
- **Vih (min) = 2.0 V**

Ball 13x13	Name	Dir	Driving Iol & Ioh Typ (mA)	Vol at Iol Max (V)	Voh at Ioh Min (V)	PU/PD Resistor			Pull	Cin (pF)
						Min	Typ	Max		
			JTAG Port							
E4	**JTRST#**	I				40K	75K	190K	PD	2
F5	**JTCK**	I				40K	75K	190K	PU	2
F4	**JTDI**	I				40K	75K	190K	PU	2
F3	**JTMS**	I				40K	75K	190K	PU	2
F2	**JTDO**	O	4	0.4	2.4					
F1	**JRTCK**	O	4	0.4	2.4					
			RF Parallel Control Unit							
G5	**BPI_BUS0**	O	2/8	0.4	2.4					
G4	**BPI_BUS1**	O	2/8	0.4	2.4					
G3	**BPI_BUS2**	O	2/8	0.4	2.4					
G1	**BPI_BUS3**	O	2/8	0.4	2.4					
J6	**BPI_BUS4**	O	2	0.4	2.4					
H5	**BPI_BUS5**	O	2	0.4	2.4					
H4	**BPI_BUS6**	IO	2	0.4	2.4	40K	75K	190K	PD	2
H3	**BPI_BUS7**	IO	2	0.4	2.4	40K	75K	190K	PD	2
H2	**BPI_BUS8**	IO	2	0.4	2.4	40K	75K	190K	PD	2
J5	**BPI_BUS9**	IO	2	0.4	2.4	40K	75K	190K	PD	2
			RF Serial Control Unit							
J4	**BSI_CS0**	O	2	0.4	2.4					
J3	**BSI_DATA**	O	2	0.4	2.4					
J2	**BSI_CLK**	O	2	0.4	2.4					
			PWM Interface							
R4	PWM1	IO	2	0.4	2.4	40K	75K	190K	PD	2
R3	PWM2	IO	2	0.4	2.4	40K	75K	190K	PD	2
R2	ALERTER	IO	2	0.4	2.4	40K	75K	190K	PD	2
			Serial LCD/PM IC Interface							
J1	LSCK	IO	2/4/6/8	0.4	2.4	40K	75K	190K	PU	2
K5	LSA0	IO	2/4/6/8	0.4	2.4	40K	75K	190K	PU	2
K4	LSDA	IO	2/4/6/8	0.4	2.4	40K	75K	190K	PU	2
K3	LSCE0#	IO	2/4/6/8	0.4	2.4	40K	75K	190K	PU	2
K2	LSCE1#	IO	2/4/6/8	0.4	2.4	40K	75K	190K	PU	2
			Parallel LCD/NAND-Flash Interface							
K6	LPCE1#	IO	2/4/6/8	0.4	2.4	40K	75K	190K	PU	2
L5	**LPCE0#**	O	2/4/6/8							
L4	**LRST#**	O	2/4/6/8							
L3	**LRD#**	O	2/4/6/8							

MTK Confidential Release for Konka

L2	**LPA0**	O	2/4/6/8							
L1	**LWR#**	O	2/4/6/8							
G7	NLD17	IO	2/4/6/8	0.4	2.4	40K	75K	190K	PD	2
J9	NLD16	IO	2/4/6/8	0.4	2.4	40K	75K	190K	PD	2
K9	**NLD15**	IO	2/4/6/8	0.4	2.4	40K	75K	190K	PD	2
J10	**NLD14**	IO	2/4/6/8	0.4	2.4	40K	75K	190K	PD	2
L9	**NDL13**	IO	2/4/6/8	0.4	2.4	40K	75K	190K	PD	2
K10	**NLD12**	IO	2/4/6/8	0.4	2.4	40K	75K	190K	PD	2
J11	**NLD11**	IO	2/4/6/8	0.4	2.4	40K	75K	190K	PD	2
L10	**NLD10**	IO	2/4/6/8	0.4	2.4	40K	75K	190K	PD	2
K11	**NLD9**	IO	2/4/6/8	0.4	2.4	40K	75K	190K	PD	2
L11	**NLD8**	IO	2/4/6/8	0.4	2.4	40K	75K	190K	PD	2
L6	**NLD7**	IO	2/4/6/8	0.4	2.4	40K	75K	190K	PD	2
M5	**NLD6**	IO	2/4/6/8	0.4	2.4	40K	75K	190K	PD	2
M4	**NLD5**	IO	2/4/6/8	0.4	2.4	40K	75K	190K	PD	2
M3	**NLD4**	IO	2/4/6/8	0.4	2.4	40K	75K	190K	PD	2
N5	**NLD3**	IO	2/4/6/8	0.4	2.4	40K	75K	190K	PD	2
N4	**NLD2**	IO	2/4/6/8	0.4	2.4	40K	75K	190K	PD	2
N3	**NLD1**	IO	2/4/6/8	0.4	2.4	40K	75K	190K	PD	2
N2	**NLD0**	IO	2/4/6/8	0.4	2.4	40K	75K	190K	PD	2
N1	**NRNB**	IO	2/4/6/8	0.4	2.4	40K	75K	190K	PU	2
P5	**NCLE**	IO	2/4/6/8	0.4	2.4	40K	75K	190K	PD	2
P4	**NALE**	IO	2/4/6/8	0.4	2.4	40K	75K	190K	PD	2
P3	**NWE#**	IO	2/4/6/8	0.4	2.4	40K	75K	190K	PU	2
P2	**NRE#**	IO	2/4/6/8	0.4	2.4	40K	75K	190K	PU	2
P1	**NCE#**	IO	2/4/6/8	0.4	2.4	40K	75K	190K	PU	2
			SIM Card Interface							
M19	**SIMRST**	O	2	0.4	2.4					
L16	**SIMCLK**	O	2	0.4	2.4					
L17	**SIMVCC**	O	2	0.4	2.4					
L18	SIMSEL	IO	2/4/6/8	0.4	2.4	40K	75K	190K	PD	2
L19	**SIMDATA**	IO	2	0.4	2.4					2
			Dedicated GPIO Interface							
U3	**GPIO0**	IO	2	0.4	2.4	40K	75K	190K	PD	2
U1	**GPIO1**	IO	2	0.4	2.4	40K	75K	190K	PD	2
D17	**GPIO2**	IO	2	0.4	2.4	40K	75K	190K	PU	2
C19	**GPIO3**	IO	2	0.4	2.4	40K	75K	190K	PU	2
C18	**GPIO4**	IO	2/4/6/8	0.4	2.4					2
C17	**GPIO5**	IO	2/4/6/8	0.4	2.4					2
A19	**GPIO6**	IO	2/4/6/8	0.4	2.4					2
B18	**GPIO7**	IO	2/4/6/8	0.4	2.4					2
A18	**GPIO8**	IO	4	0.4	2.4					2
A17	**GPIO9**	IO	4	0.4	2.4					2
			Miscellaneous							
T2	**SYSRST#**	I								2
R16	**WATCHDOG#**	O	4	0.4	2.4					
T1	**SRCLKENAN**	O	2	0.4	2.4					
T4	**SRCLKENA**	O	2	0.4	2.4					
T3	SRCLKENAI	IO	2	0.4	2.4	40K	75K	190K	PD	2

MTK Confidential Release for Konka

E5	**TESTMODE**	I				40K	75K	190K	PD	2
D15	**ESDM_CK**	O								
			Keypad Interface							
H17	**KCOL6**	I	2			40K	75K	190K	PU	2
H18	**KCOL5**	I	2			40K	75K	190K	PU	2
H19	**KCOL4**	I	2			40K	75K	190K	PU	2
G15	**KCOL3**	I	2			40K	75K	190K	PU	2
G16	**KCOL2**	I	2			40K	75K	190K	PU	2
G17	**KCOL1**	I	2			40K	75K	190K	PU	2
G18	**KCOL0**	I	2			40K	75K	190K	PU	2
G19	**KROW5**	O	2/8	0.4	2.4					
F15	**KROW4**	O	2/8	0.4	2.4					
F16	**KROW3**	O	2/8	0.4	2.4					
F17	**KROW2**	O	2/8	0.4	2.4					
E16	**KROW1**	O	2	0.4	2.4					
E17	**KROW0**	O	2	0.4	2.4					
			External Interrupt Interface							
U2	**EINT0**	I				40K	75K	190K	PU	2
V1	**EINT1**	I				40K	75K	190K	PU	2
W1	**EINT2**	I				40K	75K	190K	PU	2
V2	**EINT3**	I				40K	75K	190K	PU	2
U4	MIRQ	I	4	0.4	2.4	40K	75K	190K	PU	2
B17	MFIQ	I	2/4/6/8	0.4	2.4	40K	75K	190K	PU	2
			External Memory Interface							
R15	**ED0**	IO	2~32	0.4	2.4					2
T19	**ED1**	IO	2~32	0.4	2.4					2
T18	**ED2**	IO	2~32	0.4	2.4					2
U19	**ED3**	IO	2~32	0.4	2.4					2
U18	**ED4**	IO	2~32	0.4	2.4					2
V19	**ED5**	IO	2~32	0.4	2.4					2
W19	**ED6**	IO	2~32	0.4	2.4					2
W18	**ED7**	IO	2~32	0.4	2.4					2
U17	**ED8**	IO	2~32	0.4	2.4					2
W17	**ED9**	IO	2~32	0.4	2.4					2
T16	**ED10**	IO	2~32	0.4	2.4					2
U16	**ED11**	IO	2~32	0.4	2.4					2
V16	**ED12**	IO	2~32	0.4	2.4					2
T15	**ED13**	IO	2~32	0.4	2.4					2
U15	**ED14**	IO	2~32	0.4	2.4					2
W15	**ED15**	IO	2~32	0.4	2.4					2
P12	**ERD#**	O	2~32	0.4	2.4					
T12	**EWR#**	O	2~32	0.4	2.4					
U12	**ECS0#**	O	2~32	0.4	2.4					
V12	**ECS1#**	O	2~32	0.4	2.4					
P11	**ECS2#**	O	2~32	0.4	2.4					
R11	**ECS3#**	O	2~32	0.4	2.4					
R14	**EWAIT**	O	2~32			40K	75K	190K	PU	
T14	**ECAS#**	O	2~32	0.4	2.4					
W14	**ERAS#**	O	2~32	0.4	2.4					

MTK Confidential Release for Konka

R13	**ECKE**	O	2~32	0.4	2.4					
T13	**EDCLK**	O	2~32	0.4	2.4					
V13	**ELB#**	O	2~32	0.4	2.4					
W13	**EUB#**	O	2~32	0.4	2.4					
T11	**EPDN#**	O	10	0.4	2.4					
W11	**EADV#**	O	2~32	0.4	2.4					
V11	**ECLK**	O	2~32	0.4	2.4					
P10	**EA0**	O	2~32	0.4	2.4					
T10	**EA1**	O	2~32	0.4	2.4					
U10	**EA2**	O	2~32	0.4	2.4					
W10	**EA3**	O	2~32	0.4	2.4					
R9	**EA4**	O	2~32	0.4	2.4					
T9	**EA5**	O	2~32	0.4	2.4					
U9	**EA6**	O	2~32	0.4	2.4					
V9	**EA7**	O	2~32	0.4	2.4					
R8	**EA8**	O	2~32	0.4	2.4					
T8	**EA9**	O	2~32	0.4	2.4					
W8	**EA10**	O	2~32	0.4	2.4					
P8	**EA11**	O	2~32	0.4	2.4					
R7	**EA12**	O	2~32	0.4	2.4					
U7	**EA13**	O	2~32	0.4	2.4					
V7	**EA14**	O	2~32	0.4	2.4					
W7	**EA15**	O	2~32	0.4	2.4					
T6	**EA16**	O	2~32	0.4	2.4					
U6	**EA17**	O	2~32	0.4	2.4					
W6	**EA18**	O	2~32	0.4	2.4					
R5	**EA19**	O	2~32	0.4	2.4					
T5	**EA20**	O	2~32	0.4	2.4					
U5	**EA21**	O	2~32	0.4	2.4					
V5	**EA22**	O	2~32	0.4	2.4					
W4	**EA23**	O	2~32	0.4	2.4					
V4	**EA24**	O	2~32	0.4	2.4					
W3	**EA25**	O	2~32	0.4	2.4					
P17	**MCCM0**	IO	2/4/6/8	0.4	2.4	40K	75K	190K	PU/PD	2
P18	**MCDA0**	IO	2/4/6/8	0.4	2.4	40K	75K	190K	PU/PD	2
P19	**MCDA1**	IO	2/4/6/8	0.4	2.4	40K	75K	190K	PU/PD	2
N17	**MCDA2**	IO	2/4/6/8	0.4	2.4	40K	75K	190K	PU/PD	2
N18	**MCDA3**	IO	2/4/6/8	0.4	2.4	40K	75K	190K	PU/PD	2
M18	**MCCK**	O	2/4/6/8	0.4	2.4					
N19	**MCPWRON**	O	2	0.4	2.4					
M16	**MCWP**	I	2			40K	75K	190K	PU/PD	2
M17	**MCINS**	I	2			40K	75K	190K	PU/PD	2
			UART/IrDA Interface							
K15	**URXD1**	I	2/4/6/8			40K	75K	190K	PU	2
K16	**UTXD1**	O	2/4/6/8	0.4	2.4					
K17	**UCTS1**	I	2/4/6/8			40K	75K	190K	PU	2
K18	**URTS1**	O	2/4/6/8	0.4	2.4					
K19	URXD2	IO	2/4/6/8	0.4	2.4	40K	75K	190K	PU	2

MTK Confidential Release for Konka

J15	UTXD2	IO	2/4/6/8	0.4	2.4	40K	75K	190K	PU	2
J16	URXD3	IO	2/4/6/8	0.4	2.4	40K	75K	190K	PU	2
J17	UTXD3	IO	2/4/6/8	0.4	2.4	40K	75K	190K	PU	2
J19	IRDA_RXD	IO	2/4/6/8	0.4	2.4	40K	75K	190K	PU	2
H15	IRDA_TXD	IO	2/4/6/8	0.4	2.4	40K	75K	190K	PU	2
H16	IRDA_PDN	IO	2/4/6/8	0.4	2.4	40K	75K	190K	PU	2
			Digital Audio Interface							
E18	DAICLK	IO	2/4/6/8	0.4	2.4	40K	75K	190K	PU	2
E19	DAIPCMOUT	IO	2/4/6/8	0.4	2.4	40K	75K	190K	PD	2
D16	DAIPCMIN	IO	2/4/6/8	0.4	2.4	40K	75K	190K	PU	2
D19	DAIRST	IO	2/4/6/8	0.4	2.4	40K	75K	190K	PU	2
D18	DAISYNC	IO	2/4/6/8	0.4	2.4	40K	75K	190K	PU	2
			CMOS Sensor Interface							
J12	CMRST	IO	2	0.4	2.4	40K	75K	190K	PD	2
K12	CMPDN	IO	2	0.4	2.4	40K	75K	190K	PD	2
H12	**CMVREF**	I	2			40K	75K	190K	PD	2
H11	**CMHREF**	I	2			40K	75K	190K	PD	2
H9	**CMPCLK**	I	2			40K	75K	190K	PD	2
H10	**CMMCLK**	O	2/4/6/8	0.4	2.4					
H8	**CMDAT9**	I	2/4/6/8	0.4	2.4	40K	75K	190K	PD	2
J8	**CMDAT8**	I	2/4/6/8	0.4	2.4	40K	75K	190K	PD	2
K8	**CMDAT7**	I	2/4/6/8	0.4	2.4	40K	75K	190K	PD	2
L8	**CMDAT6**	I	2/4/6/8	0.4	2.4	40K	75K	190K	PD	2
M8	**CMDAT5**	I	2/4/6/8	0.4	2.4	40K	75K	190K	PD	2
M9	**CMDAT4**	I	2/4/6/8	0.4	2.4	40K	75K	190K	PD	2
M10	**CMDAT3**	I	2/4/6/8	0.4	2.4	40K	75K	190K	PD	2
M11	**CMDAT2**	I	2/4/6/8	0.4	2.4	40K	75K	190K	PD	2
M12	CMDAT1	IO	2/4/6/8	0.4	2.4	40K	75K	190K	PD	2
L12	CMDAT0	IO	2/4/6/8	0.4	2.4	40K	75K	190K	PD	2

MTK Confidential Release for Konka