Electrical Characteristics	SSP80-12	SSP85-12
Maximum power (Pmax)	80W	85W
Voltage at Pmax (Vmp)	17.2V	17.2V
Current at Pmax (Imp)	4.65A	4.94A
Open-circuit voltage (Voc)	21.6V	21.6V
Short-circuit current (Isc)	5.17A	5.5A
Temperature coefficient of Voc	(0.065±0.015)%/ °C	(0.065±0.015)%/ °C
Temperature coefficient of Isc	-(80±10)mV/°C	-(80±10)mV/°C
Temperature coefficient of power	-(0.5±0.05)%/ °C	-(0.5±0.05)%/ °C
NOCT (Air 20°C; Sun 0.8kW/m wind 1m/s)	47±2°C	47±2°C
Operating temperature	-40°C to 85°C	-40°C to 85°C
Maximum system voltage	600V DC	600V DC
Power tolerance	± 5%	± 5%

*STC:Irradiance 1000W/m^2, AM1.5 spectrum, module temperature 25°C

Module Diagram

Dimensions in brackets are in inches.

Un-bracketed dimensions are in millimeters.

Unit:mm[in.]

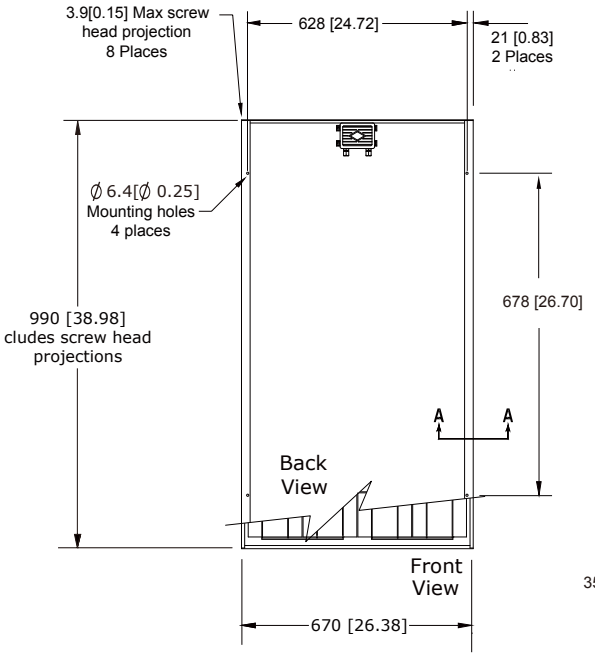

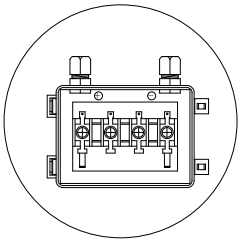

Junction Box
Top View (Lid open)

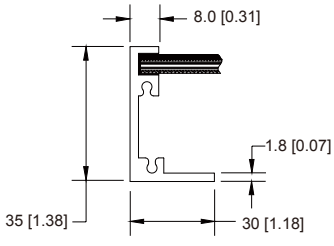

Section A-A

Features

- Nominal 12V DC for standard output.
- Outstanding low-light performance.
- Heavy-duty anodized frames.
- High transparent low-iron,tempered glass.
- Cells are laminated with TPT and EVA ensuring longer life and maximum performance.
- Rugged design to withstand high wind pressure, hail and snow load.
- Aesthetic appearance.
- 25 years limited power output warranty.
- Custom design capablities allow us to meet unique customer demands.

Characteristics

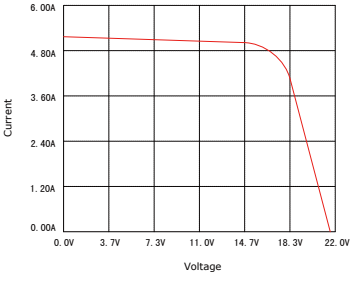

Module IV Graph 80W

Specifications	SSP80-12	SSP85-12
Cells	Multicrystalline silicon solar cell	Multicrystalline silicon solar cell
No. of cells and connections	36(4X9)	36(4X9)
Module Dimension	990mm[38.98in.]x670mm[26.38in.]x35mm[1.38in.]	1058mm[41.65in.]x670mm[26.38in.]x35mm[1.38in.]
Weight	7kg[15.43lbs]	7.5kg[16.53lbs]

* Specifications are subject to change without notice at any time.