ImageQuest

F770D (C17F05071)

Multiscanning Color Monitor

TECHNICAL SERVICE MANUAL

HYUNDAI

Safety Precaution

WARNING

Service should not be attempted by anyone unfamiliar with the necessary precautions on this monitor. The followings are the necessary precautions to be observed before servicing.

1. Always discharge the high voltage to the CRT conductive coating before handling the CRT. The picture tube is highly evacuated and if broken, glass fragments will be violently exploded. Use shatter proof goggles and keep picture tube away from the bare body while handling.
2. When replacing a chassis in the cabinet, always be certain that all the protective devices are put back in place, such as nonmetallic control knobs, insulating covers, shields, isolation resistor capacitor network etc.
3. Before returning the monitor to the customer, always perform an AC leakage current check on the exposed metallic parts of the cabinet, such as signal connectors, terminals, screw heads, metal overlays, control shafts etc, to be sure the monitor is safe to operate without danger of electrical shock. Plug the AC line cord directly into a AC outlet (do not use a line isolation trasformer during this check.). Use an AC voltmeter having 1500 ohm per volt or more sensitivity in the following manner : Connect ground(water pipe, conduit, etc.) and the exposed metallic parts, one at a time. Measure the AC Voltage across the combination of 1500 ohm resistor and 0.15μF capacitor. Reverse the AC plug at the AC outlet and repeat AC voltage measurements for each exposed metallic part. The Voltage must not exceed 0.3 volts RMS. This corresponds to 0.2 milliamp AC. Any value exceeded this limit constitutes a potential shock hazard and must be corrected immediately.

AC VOLTMETER

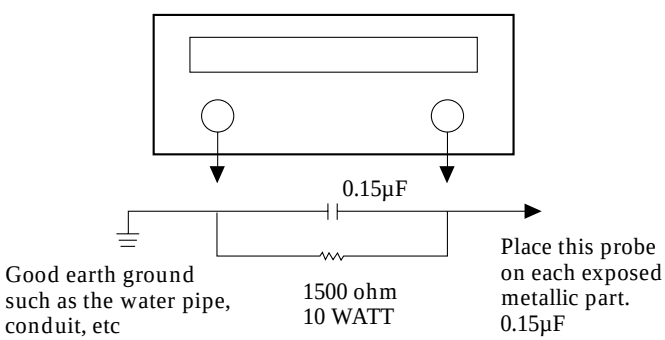

INSTRUCTIONS TO USER

This equipment generates and uses radio frequency energy and if not installed and used properly, that is, in strict accordance with the manufacturer's instruction, may cause interference to radio and television. It has been tested and found to comply with the limits for the specifications in Subpart J of Part 15 FCC Rules, which are designed to provide reasonable protection against such interference in a residential installation. However, there is no guarantee that interference will not occur in a particular installation.

If this equipment does cause interference to radio or television reception, which can be determined by turning the equipment off and on, the user is encouraged to try to correct the interference by one or more of the following measures.

- reorient the receiving antenna
- relocate the computer with respect to the receiver
- plug the computer into a different outlet so that computer and receiver are on different branch circuits.

X-Ray Radiation Precaution

1. Excessive high voltage can produce potentially hazardous X-RAY RADIATION. To avoid such hazards, the high voltage must be under the specified limit. The nominal value of the high voltage of this monitor is 26KV ±1.0KV at zero beam current(minimun brightness) under a 120V AC power source. The high voltage must not(under any circumstances) exceed30KV. Each time a monitor requires servicing, the high voltage should be checked.
   It is recommended the high voltage be recorded as a part of the service record. It is important to use an accurate and reliable high voltage meter.
2. This monitor is equipped with a protection circuit which prevents the monitor from producing excessively high voltage. Each time the monitor is serviced, the protection circuit must be checked to determine that the circuit is properly functioning.
3. The only source of X-RAY RADIATION in this monitor is the picture-tube.
   For continued X-RAY RADIATION protection, the replacement tube must be exactly the same type tube as specified in the parts list.
4. Some parts in this monitor have special safety-related characteristics for X-RAY RADIATION protection.
   For continued safety, parts replacement should be undertaken only after referring to the product safety notice.

RODUCT SAFETY NOTICE

Many electrical and mechanical parts in this monitor have special safety-related characteristics. These characteristics are often not evident from visual inspection.
Replacement parts which have these special safety characteristics are identified in this manual; electrical components having such features identified by "⚠" in the replacement parts list and schematic diagram.
For continued protection, replacement parts must be identical to those used in the original circuit. The use of substitute replacement parts which dose not have the same safety characteristics as the factory recommended replacement parts shown in this service manual, may create shock, fire, X-RAY RADIATION or other hazards.

PRODUCT CDRH NOTICE

Electrical potentiometers which is marked as caution "⚠" in parts list are crititial components of safety & CDRH.
Therefore, for continued protection, replacements parts must be used it which is used in original PCB ASS'Y.

General Inforormation

1. Description

This 17" (16" viewable) color display monitor is operated in R, G, B, drive mode input.

2. Operating instructions

2-1. Front

Menu, Select,Down (▼),Up(▲) DPMS(Power)LED, Soft Power.

2-2. Rear

Input connection (AC & SIGNAL CABLE)

2-3 Service Instruction(internal controls)

H-Center , H / V Focus

2-4. OSD Controls

Brightness / Contrast, H / V-Position, H / V-Size, Pincushion / Trapezoid, Pin Balance, Parallel, Rotation, H / V Moire, Degauss, Color Control, Information, Language, OSD H / V Position ,Recall

3. Electrical Characteristics

3-1. Power supply

Input Voltage : 100-240 V AC
Input Current : 1.5A Max.
Input Frequency : 50 - 60Hz
Power Consumption : 75W Max.

3-2. Video input signal

Input : 0.7 Vp-p analog signal(at 75 ohm terminated to ground)
Polarity : Positive
Rise / Fall time : < 5ns

3-3. Horizontal Synchronization Signal

Level : TTL High : 2.4V min
Low : 0.4V max
Polarity : Negative or Positive
Frequency : 30kHz - 70kHz
Timing Limits : Pulse width ($0.1\mu s \leq Thp \leq 6\mu s$)

3-4. Vertical Synchronization Signal

Level : TTL High : 2.0V min
Low : 0.4V max
Polarity : Negative or Positive
Frequency : 50Hz - 150Hz
Timing Limits : Pulse width ($8\mu s \leq Tvp \leq 2.048ms$)

Control Desciption

Front View

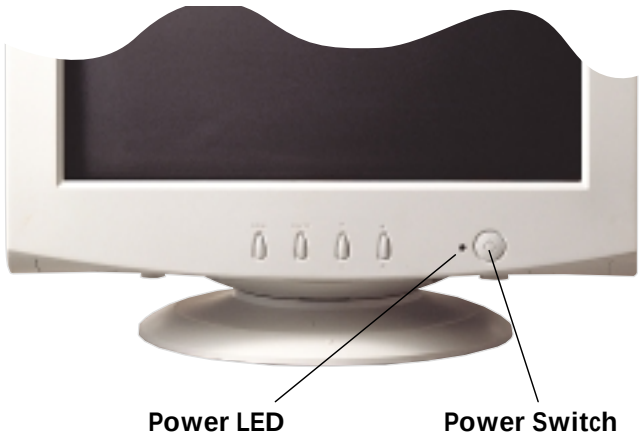

Video Input Signal

Recommended signals are shown below.

- **Video Signal**
  Video Level : 0 to 700mV
  Polarty : Positive
  Video Input : RGB separated
  Analog level
  Sync input : H-Sync ; TTL level
  V-Sync ; TTL level
- **Waveform**
  Video input(R, G, B)

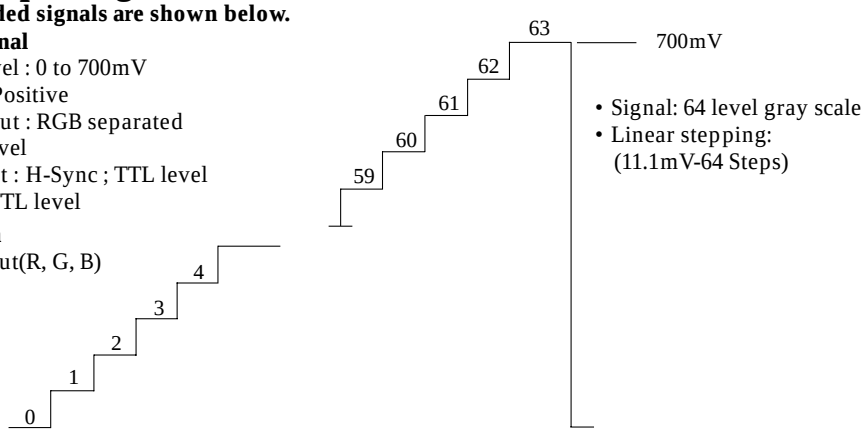

- **H-Sync**

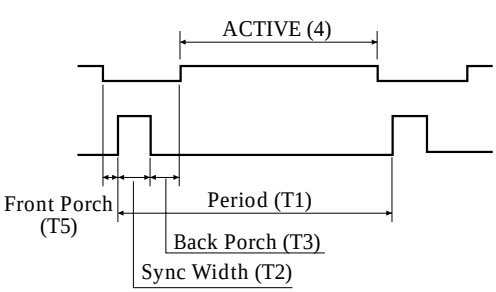

- **V-Sync**

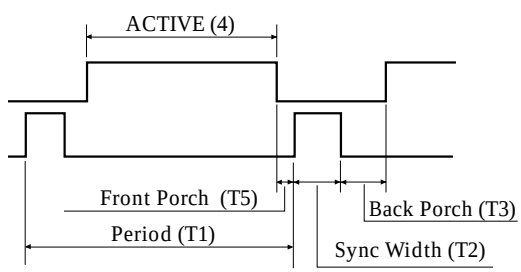

• **Timing Table**

Horizontal	Dot	720	640	640	800	800	800	1024	1024
Frequency	kHz	31.469	43.269	50.625	46.875	53.674	63.920	60.023	68.677
Period(T1)	µs	31.778	23.111	19.752	21.333	18.631	15.645	16.660	14.561
Sync Width(T2)	µs	3.813	1.556	1.580	1.616	1.138	1.185	1.219	1.016
Back Porch(T3)	µs	1.907	2.222	1.975	3.232	2.702	2.015	2.235	2.201
Active(T4)	µs	25.422	17.778	15.802	16.162	14.222	11.852	13.003	10.836
Front Porch(T5)	µs	0.636	1.556	0.395	0.323	0.569	0.593	0.203	0.508

Vertical	Line	400	480	480	600	600	600	768	768
Frequency	Hz	70.080	85.008	100.05	75.000	85.061	100.03	75.029	84.997
Period(T1)	ms	14.268	11.764	9.995	13.333	11.756	9.997	13.328	11.765
Sync Width(T2)	ms	0.064	0.069	0.059	0.064	0.056	0.063	0.050	0.044
Back Porch(T3)	ms	1.080	0.570	0.435	0.448	0.503	0.501	0.466	0.524
Active(T4)	ms	12.711	11.093	9.481	12.800	11.179	9.387	12.795	11.183
Front Porch(T5)	ms	0.413	0.023	0.020	0.021	0.019	0.047	0.017	0.015
Interlaced	ms	1.557	0.671	0.514	0.553	0.577	0.610	0.533	0.582
Sync Polar	H	-	-	-	+	+	+	+	+
	V	+	-	-	+	+	+	+	+
Interlaced	Y / N	N	N	N	N	N	N	N	N

The monitor is compatible with additional modes within the specified frequency ranges provided that they are different at least for one of the following :
Horizontal Freq.: ±1.0kHz
Vertical Freq.: ±1Hz

Note: Even if the monitor detects the input timing as a factory preset mode, the size and position may not be able to be set as desired. Check the input timings are under the specifications and adjust the image as you want.

For better quality of display image, use the timing and polarity shown in the table above. Please see your video card user's guide to ensure compatibility.

Video Input Terminal

A 15 Pin D-sub male connector is used as the input signal connector.
Pin and input signals are shown in the table below.

Pin Description

SIGNAL / PIN NO.	SEPERATE SYNC	COMPOSITE SYNC
1	RED	RED
2	GREEN	GREEN
3	BLUE	BLUE
4	N.C	N.C
5	DDC RETURN	DDC RETURN
6	RED GROUND	RED GROUND
7	GREEN GROUND	GREEN GROUND
8	BLUE GROUND	BLUE GROUND
9	+5(NOT USED)	+5(NOT USED)
10	LOGIC GROUND	LOGIC GROUND
11	N.C	N.C
12	SDA	SDA
13	H-SYNC(TTL)	(H+V) SYNC
14	V-SYNC(VCLK)	VCLK
15	SCL	SCL

D-Sub male connector

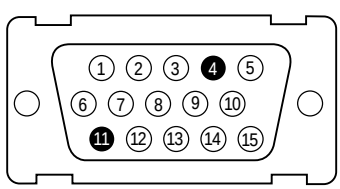

Connecting With External Equipment

Cautions

Be sure to turn off the power of your computer before connecting the monitor.

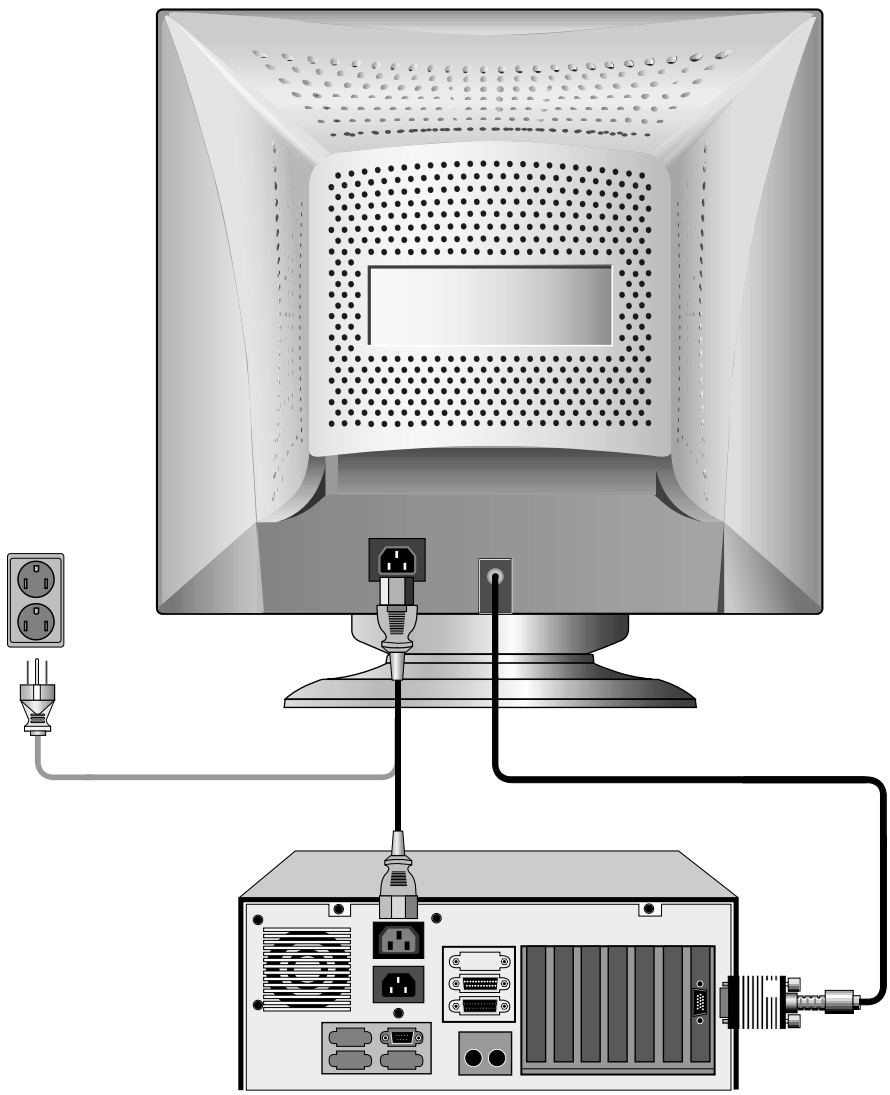

Theory of Operation

1. Power Supply

The AC line voltage range is from 100V to 240V.
The SMPS has +80V, +55V, -12V, +7.0V, +14V, +5V
The conducted noise is filtered by X(CP01, CP04) and Y (CP02, CP03, CP11)capacitors and a common mode line filter (LP02).
The input rectifier (DP01～DP04) converts the AC line voltage into a DC voltage to power the SMPS.
The UC3843 (ICP01) drives the power FET(QP04) according to the PWM signals generated by the R_T and C_T (RP07, CP10) connected pin 4 of ICP01.
The ICP01 is an integrated current mode PWM.
It consists of an oscillator, error amplifier, current sense comparator, under voltage lock-out and an MOSFET drive stage.
The switching frequency is locked to horizontal scan frequency by horizontal flyback pulse.
When the monitor is in OFF mode with no pulsed syncs. QP05 and QP07 is turned off. The total power consumption must be less than 5W in off mode.

2. DPMS and Self test mode

The power supply supports the DPMS function. Its operation is shown in the table below.

MODE	H-SYNC	V-SYNC	BRI MCU PIN35	MCU PIN 9	MCU PIN 10	QP07	14V	7.0V	REMARK
NORMAL	O	O	CONTROL	H	H	ON	14V	7.0V	
SELFTEST	X	X	5 V	H	H	ON	14V	7.0V	
STAND-BY	X	O	0 V	L	H	OFF	0V	7.0V	
SUSPEND	O	X	0 V	L	H	OFF	0V	7.0V	
OFF	X	X	0 V	L	L	OFF	0V	2.3V	

3. Signal Processing and MCU Control

The X-TAL resonates at 12MHz.
When the H and V sync or TTL composite sync are input to MCU, MCU can measures the H and V frequency to detect the video mode.
MCU has digital to analog converter(DACS) control function like ABL, H-LIN rotation, brightness. and MCU can control , Recall, H / V-Size, H / V-Position, Pincushion / Trapezoide, Parallel / Pin Balance, H / V Moire, Color Control, Information, Language, Soft Power by I2C BUS Line.
The operation of MCU is shown in the table below.

H-FREQ (kHz)	H-LIN1 PIN 30	H-LIN2 PIN 29	H-LIN3 PIN 28	REMARK
$31 < H \leq 33$	L	L	L	
$33.1 < H \leq 36$	L	L	H	
$36.1 < H \leq 41$	L	H	H	
$41.1 < H \leq 45$	H	L	L	
$45.1 < H \leq 52$	H	L	L	
$52.1 < H \leq 59.0$	H	L	H	
$59.1 < H \leq 62.0$	H	H	L	
$62.1 < H \leq 66.0$	H	H	H	
$66.1 < H \leq 69.0$	H	H	H	

4. Horizontal Deflection

TDA9116 is an I²C autosync deflection controller for H/V sync and drive processing.
All functions are controlled by I2C bus.
When H-Sync is applied, the internal oscillator is automatically locked.
The duty-cycle of H-output pulse Pin 8/26 is variable by frequency.
QH08 and TH01 are used to drive the H-output transistor (QH09). QH09 is turned on, it conducts current through the deflection yoke on the right hand side of the screen.
This current comes from the S correction capacitors (CH27, CH29, CH32, CH34), which have a charge equal to the effective supply voltage.
When the QH09 is opened up, the damper diode(DH12) allows current for left hand side of the screen to flow back through the deflection yoke to the S capacitors.
The flyback capacitor (CH23) determines the size and length of the flyback pulse.
The S capacitors correct outside versus center linearity in horizontal scan.
THERE FETs (QH11, QH12, QH13) select the value of S capacitors.
H-centering is controlled by a switch(SWH01). The switch selects DC offset current flow through the yoke.
A diode modulator is used to control the E-W correction and H-size. ICH01 generates the E-W parabora wave using vertical amp.
A power buffer (QH02, QH03) drives the diode modulator.
In order to keep the high voltage constant independent of the horizontal scan frequency, the supply voltage of FBT must increase with increasing scan frequency proportionally. A step-up mode DC-DC converter with PWM is used to realize this demand.
ICH01 compares high-voltage feedback with reference voltage. Its output pulse switches a FET(QH07). To adjust the high voltage, TDA9116(ICH01) has a control terminal (Pin14).

5. Vertical Deflection

In vertical section of TDA9116/TDA9302H there is auto-sync processing.
The vertical output stage consists of a power OP-AMP with extra flyback grnerator.
TDA4866/TDA9302(ICV01) is used as vertical output stage.

6. X-Ray Protection and Beam Current Limiting.

A failure in the horizontal scan control section could cause a dangerous situation; the high voltage might rise to an unacceptable high level. When the flyback voltage rise to unacceptable level, the pin25 of ICH01 detects these states over 6.2V TDA9116/over 8.6V TDA9116
It causes the H-drive stage and oscillator to be turned off. Then high voltage is shut down until the power switch is on.
The average anode current is measured at lower side of the High Voltage winding of the FBT. The anode current flows through Connectors(CON04.CNC01) connected ICC01(KA2500) and through RM07 Connected ICM01 Pin38. and ABL is controlled by ICC01.

7. Video Amplifier and OSD Interface

KA2500(ICC01) is a Very High Freguncy video amplifier with three matched video amplifiers, OSD Contrast Control SDA, SCL,OSD Interface, OSD BLK drive controls, blanking gate and clamp gate.
H-blank signal is applied to Pin 19. During blanking all three outputs are thrown to the pedestal level. An inserted H-sync is used to a clamp signal.
The signal is applied to ICC01 Pin 18.
Three OSD inputs (Pin 1,2,3 of ICC01) are TTL compatible and typical bandwidth is 80MHz.
A fast commutate pin is provided to select either the video or the OSD inputs as a source for amplification.
OSD contrast control is made by controlling simultaneously the gain of three internal variable gain amplifiers through the I2C bus interface. MTV021 is designed for monitor application to display built-in characters or fonts on to monitor screen.
The display operation occurs by transferring data and control information from the MCU to RAM through a serial data interface.
The output stage is made of 3-channel power amplifier (ICC03, LM2437). The output is capable of 40 Volts swing in less than 11 Sec?
The three cathodes are AC coupled to the video amplifiers. The DC level on each cathode is set by a cut-off amplifier and clamp diode. The value of the DC voltage is adjusted by DACS.

Visual Characteristics

1. Test condition

- Resolution : Any of Preset modes
- Input level : 700mV
- Pattern : Central White box covering 20% of the data area
- Brightness Control : Default position (cut off)
- Contrast Control : Adjust to 100 cd / m2 of luminance (Center of the white field)
- Image duty cycle : 10% to 90%
- Magentic field : Horizontal = 0.3 Gauss
  Vertical = 0.4 Gauss
- Supply Voltage : 100 ~240 VAC
- Operating Condition
  Temperature (0 to 40)°C
  Humidity (35 to 80)% (W / O condensation)
  Altitude (0 to 3000)m
- Stroage condition
  Temperature (-20 to 60)°C
  Humidity (5 to 85)% (W / O condensation)
  Altitude (0 to 15,000)m

2. Display Centering

The following describes the pattern for this test. Basically it is composed by a single pixel white line around the perimeter of the data area, with marks for the horizontal and vertical axes, the background is black.
The display centering shall be met as following specification at adjustied centering function (user's control)

[L-R] ≤4mm [U-D] ≤4mm

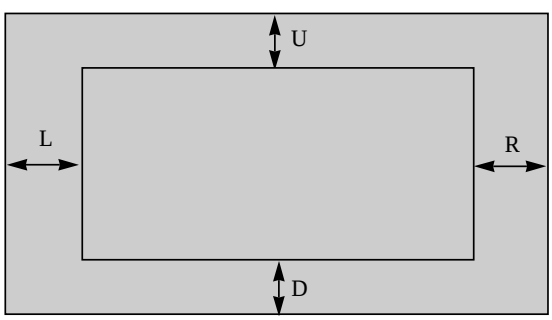

Display Centering

3. Tilt

The maximum variation of the display rotation(tilt) shall be with in 2.0 mm based on the following formula.

[Ly-Ry] ≤2.0mm

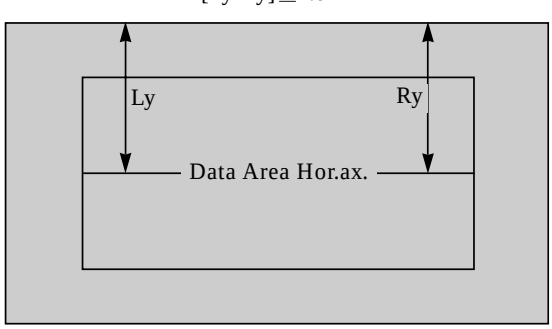

4. Geometric Distortion

All kind of Geometric Distortion
(Pincushion, Barallel, Parallelogram and Trapezoid) shall be with in 2mm boundary (to tolerance frame) Refer to belows tolerance frame.
A ≤2mm B≤2mm
The tolerance frame sides are parallel to the window of enclosure axes.

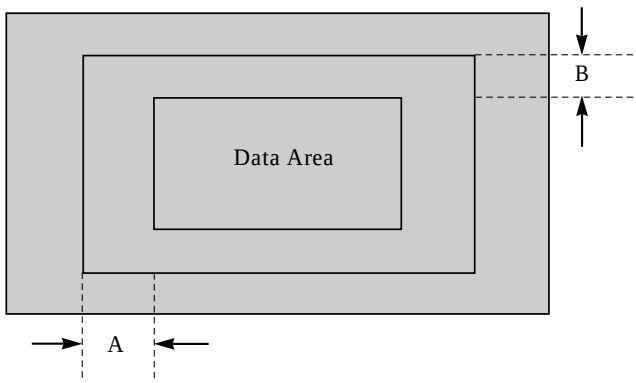

5. Linearity

The linearity of an image displayed on the CRT must meet the following requirements, with reference to figure for both X and Y axis.

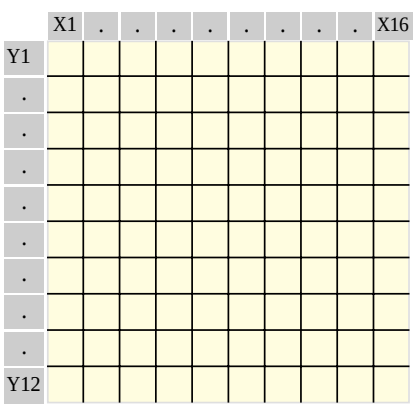

• Formula : $\frac{XMax - XMin}{XMax + XMin} \times 100 = \leq 6\%$ overall

$\frac{XMax - XMin}{XMax + XMin} \times 100 = \leq 5\%$ adjacent cells

• Where : X1=X2=....X16
Y1=Y2=....Y12

6. Misconvergence

The display must confirm to all following requirements:
Maximum convergence error.

Area	Horiz. Direction	Vert. Direction
A Central circle field of(229) mm diameter	0.3mm	0.3mm
B All screen Area (305×229) except Area A	0.4mm	0.4mm

The maximum convergence error shall be measures for a white spot of line, and represents the maximum distance between the energy centers of any two primary colors.

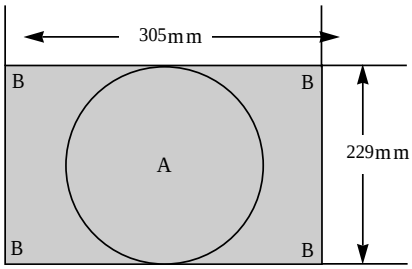

Active Area

Power Management System

The automatic power management function saves electricity and reduces heat. Used in conjunction with a PC having Power Management function, or a PC running Screen Blanking software, this monitor automatically reduces its power consumption when the PC is not in use.
This monitor runs in four states:ON(Normal Operating), Stand-by(No Video Signal), Suspend(Minimum Power for Quick Recovery) and OFF(Non-Operating).

This monitor is in complaince with U.S EPA Energy Star and NUTEK requirements.

Please refer to the following specifications.

State	Signals			Power consumption	Recovery time	LED Description
	H-Sync	V-Sync	Video			
On	pulses	pulses	active	75W	-	Green
Stand by	no pulse	pulses	blanked	Less Than 5W	within 3 sec	Orange
Suspend	pulses	no pulse	blanked	Less than 5W	within 3 sec	
Off	no pulse	no pulse	blanked	Less than 5W	within 3 sec	
SW Off	no pulse	no pulse	blanked	Less than 1W	within 3 sec	Off

Trouble Shooting

1. Introduction

This trouble shooting guide is arranged by fault conditions. Following each fault condition is a check for a signal on condition to be answered YES or NO.
For NO answer proceed to the right and continue until the fault is located.
For a YES answer continue in the left column to the next numbered check.
Again followed this procedure until the fault is located.

2. Trouble shooting procedure

When Troubleshooting this monitor, some precaution should be observed.
Use a high quality isolation tranformer is capable of providing 3 Amps or more.
Never connect primary ground and secondary ground together including use with an isolation transformer.
Measure high voltage with respect to chassing ground only, and with a high impedance prove of 1000 mega-ohm or higher and rated for 30KV DC or higher.
Measure QH09 collector pulse with a high quality 100:1 probe rated for 1500 volts or higher.

3. Troubleshooting procedure

Symptom	Check(YES)	Action(NO)
a) Image is scrolling.	1) Check for Vsync at pin 40 of ICM01	Check 15 pin D-sub connector, cable, ZDM02.
	2) Check for positive going Vsync at pin 2 of ICH01.	Check ICM01, ICH01
	3) Will V-oscillator is locked with input signal? (pin 22 of ICH01)	Check CH01, CH02, RH05
	4) Check V-amp at pin 23 of ICH01.	Replace ICH01.
	5) Check V-out at pin 5 of ICV01.	Check B+ at pin 4,6 of ICV01.
b) Image is unstable.	1) Check for Hsync at pin 39 of ICM01	Check 15 pin D-sub connector, cable, ZDM01.
	2) Check for positive going Hsync at pin 1 of ICH01.	Check ICM01, ICH01
	3) Will H-oscillator is locked with input signal? (pin 6 of ICH01)	Check CH06, RH06
	4) Check H-out at pin 26 of ICH01	ReplaceICH01
	5) Check for flyback pulse at pin 12 of ICH01.	Check RH10

Symptom	Check(YES)	Action(NO)
c) Screen is black but high voltage is present.	1) Check for G2, pin4 of CRT. Around 500 volts?	Check DH28, RH94, RH92, CH53, CRT socket. G2 Wire
	2) Check for heater voltage at pin 6 of CRT. (about 6.3V)	Check DP13, RP24, RP25, QP05, QP06 CRT socket. RC55, BC04, CNC01
	3) Can screen be lit with brightness control at MAX?	Check DH21, DH25, QH18, QH19, RH85 CRT socket. RH82, RH83
	4) Check for video at pin 5, 8, 10 of ICC01	Check 15 pin D-sub connector, cable, DC13, DC14, DC15
	5) Check for positive pulse for clamp at pin 18 of ICC01.	Check ICM01, ICH01
	6) Check if contrast controls video level at pin 21, 24, 26 of ICC01.	Check ICM01, RH24, ICC01
	7) Check for video at pin 1, 2, 3 of ICC03.	Check ICC03,80 75V$_{DC}$(pin 4) 12V$_{DC}$(pin 8)
	8) Check if R, G, B cut-off control the video DC level at pin 6, 8, 11 of CRT.	Check QC03 to QC08
	9) Check CRT.	
d) Screen is black with no high voltage.	1) Is the LED01 lighting in Green color.	Check H.V Sync at pin39, 40 of ICM01. Check pin 7, 8 of ICM01. Check ICM01, ICM02,ICC03
	2) Check for 14V at collector of QP07.	Check QP07, QP08. Check pin 9 of ICM01.
	3) Check output pulse at pin 6, 8 of ICH01.	Check for Vcc at pin 29 of ICH01. Check oscilation pulse at pin 29 of ICH01. Check X-Ray voltage below 6.2V at pin 2 of ICH01.
		Check RH11, RH12, RH13
	4) Check Hor-Drive pulse at Base of QH09.	Check QH08, TH01.
	5) Check B+ at pin 2 of TH04.	Check DH07, LH01, QH07, QH04, QH05, QH06, QH51, RH41, RH42, RH39, RH18, ICH01
e) No power	1) Check ICP01 pin 4, 7	Check QP01, QP02, DP05, DP09, TP02
	2) Check switch pulse at Drain of QP04.	Check pin 6, 3 of ICP01.
	3) Check voltage for, 55V at Cathode of Dp11 and for 7V at Cathode of DP13 and for 14V at cathode of DP15	Recheck above Item(d).

Adjustment Method

1. Caution

Extremely high voltage are present in the area around the FBT(TH04) and the anode high voltage Lead.

2. Equipment Required

Digital Voltmeter
Frequency Counter : about 40 Hz to 100 KHz
Color Analyzer
Video Signal Generator
High Voltmeter : up to 30 KV
Alignment Templete : Attachment 1

3. Before Adjustment

Verify that the video output level is 0.7 Vpp at 75 ohm termination and the video timmings are same as standard timming given in specification. Place the AC power switch to the ON position.
Allow the monitor to stabillize thermally for 15 minutes at least before any adjustment about the image parameters. The electron optics of the CRT and electronics of system require time of stabillize.

4. Adjustment Procedure

4-1 Horizontal raster center setting

- Video Signal : Back Raster pattern in 60kHz, 768 mode
- Measuring Point : SWH01, main board
- Place the Raster in center of the bezel.

4-2 Factory mode setting

- Turn off the power.
- Keep pressing the menu select key until the power turns on.
- Press the menu select key one more time.
- You can see the “F” message in 5the bottom on the right of the OSD main menu.
- This is the factory mode.
- Turn off the power to save the adjusted state.
- Select the "Mode Information" menu after you exit the factory mode.

4-3 Rotation setting

- Video Signal : Cross Hatch pattern in 31.5kHz, 400 mode
- Adjust the rotation of screen by using the menu select key and adjustment dial.

4-4 Color setting

- Adhere color Analyzer sensor closely to CRT center.
- Set Factory mode.
- Video mode : 68.677kHz, 768 mode

1 Color Temperature 9300°K setting
- Select " 93 " by using the menu select key and adjustment up / down KEY.

①Back Raster Setting
- Video signal : Back Raster Pattern
- Adjust the brightness of back raster by rotating the adjustment up / down KEY in “Bright”
- Limits : 2.5 ±0.5 cd / m^2

②Cut-off Setting
- Video signal : Back Raster Pattern
- Select “Cut-off” by using the menu select key and adjustment up / down KEY.
- Press the menu select key to get the desired R, G or B Cut-off.
- Rotate the adjustment dial to limit the x and y color coordinate.
- Limits : x=0.283 ±0.01, y=0.297 ±0.01

③Drive Setting
- Video signal : 20% white box
- Select the "9300" by using the menu select key and adjustment up / down KEY.
- Adjust the brightness go to 150 cd / m^2
- Press the menu select key to get the desired R or B
- Rotate the adjustment up / down KEY to limit the x and y color coordinate.
- Limits : x=0.283 ±0.01, y=0.297 ±0.01

④Contrast Setting
- Video Signal : 20% white box
- Adjust the brightness go to 0.1 cd / m2 by using the adjustment up / down KEY in “Bright”
- Adjust the brightness of 20% white box by rotating the adjustment in “Contra”
- Limits : 150 ±2.5cd / m^2

⑤Back Raster Setting again
- The method of adjustment is same to section ①

2) Color Temperature 6500°K Setting
- Select " 65 " by using the menu select key and adjustment up / down KEY.

①Back Raster, Cut-off Setting
- The method of adjustment is same to 9300°K
- The color coordinate is x=0.313 ±0.01, y=0.329 ±0.01

②Drive, contrast Setting
- The method of adjustment is same to 9300°K
- The color coordinate is x=0.313 ±0.01, y=0.329 ±0.01

4-5 Geometry Setting

- Adhere template closely to the CRT surface
- Video Signal : Cross hatch pattern in 31.5kHz to 69kHz expectively.
- Adjust the all items by using the menu / select key and adjustment .

1) Horizontal Position Setting
- Place the screen in center of the horizontal direction.

2) Horizontal Size Setting
-Adjust the horizontal size of the screen to 305 ±5 mm

3) Vertical Position Setting
- ”Place the screen in center of the vertical direction.

4) Vertical Size Setting
-Adjust the vertical size of the screen to 229 ±5 mm

5) Pincushion Setting
- Make the straight line to the vertical right and left line of screen.

6) Trapezoid Setting
- Make the same size to the horizontal up and bottom size of screen.

7) Parallelogram & Pin Balance
- Adjust parallerogram until vertical lines are parallel to the vertical vezel.

8) Corner Pin
- Adjust corner pin until 4 corners are parallel to the vertical vezel.

9) Rotation Setting
- Adjust rotate until horizontal lines are parallel to the vezel.

4-6 Focus

- Video Signal : " Full H " character pattern in 69kHz 1024 mode
- Adjust H / V Focus VR on the top and middle of the FBT so that the image of whole screen looks clear

5. X-Ray Protection Test

- In any signal input condition, short RH11 (main board) by using the JIG.
- At this moment, check out whether raster disappears.
- Remove the JIG.
- After the power switch of the set off and on, check out proper working

6. AGING and Self Test Mode

The monitor has an enhanced level of self-diagonostics.
When the signal cable is removed or signal isn't detected, the monitor is operated to OFF-Mode. If menu / select key is pushed on OFF-Mode, the system has the ability to generate an R.G.B test pattern and the following OSD image is displayed on screen.

Picture A (MODE FOR END USER)

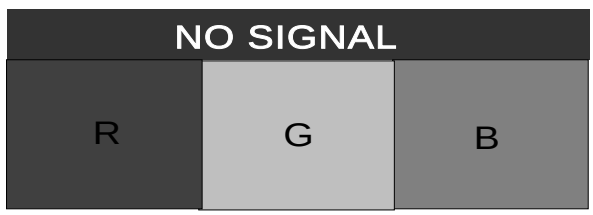

(OSD MESSAGE is moving around the screen)

Picture B (MODE ONLY FOR AGING OPERATION)

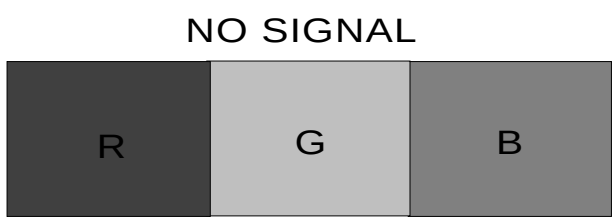

(OSD MESSAGE is fixed at the center of the screen)

1. Picture A on screen

Firstly, connect signal cable and Power on, and then remove signal cable again Secondly, push the select key and the image of " sync off " will be displayed on screen.
about 3 second later.
And last, Power Off and On again. And then Picture A on screen.

2. TRANSIT Picture A TO Picture B

Power Off and push the "select" key. And later Power on again.
About 3 second later Picture B on screen. This mode for aging

3. TRANSIT Picture B TO Picture A

Firstly, Power Off, and connect signal cable, and then push menu key.
Choose "information" from menu on screen.
Secondly remove signal cable, and later Power Off On again.
And then Picture A on screen again.

Attachment 1. Alignment Template

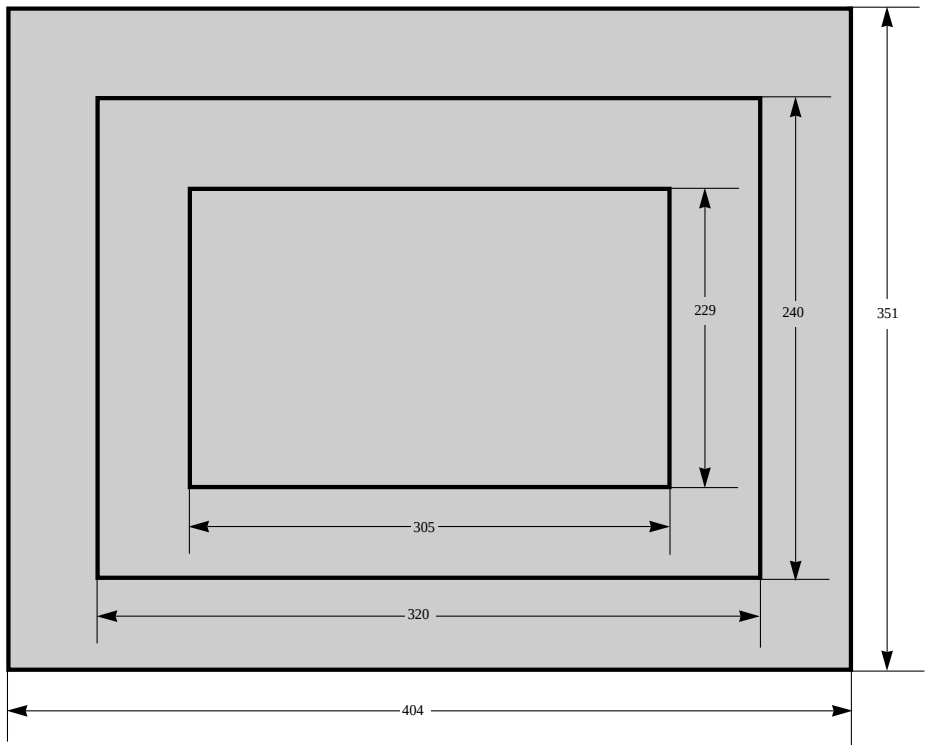

Specification

CRT	SIZE	17"(16" viewable) Diagonal
	Dot Pitch	0.25 mm
	Type	Non-glare, Anti-Static & TCO Coated
Input	Signal	R.G.B Analog
	Cable	15 pin D-Type male Connector
SYNC	H-F	30 kHz ~70 kHz(Automatic)
	V-F	50 Hz ~150 Hz(Automatic)
Video Bandwidth		108 MHz (-3dB)
Display	Area(H ×V) Color	305 ×229mm (Max. Over Scan) Infinite
Resolution	Max.	1280 ×1024(64kHz / 60Hz)
User Controls & OSD Controls		Recall, Brightness / Contrast, H / V-Position, H / V-Size, Pincushion / Trapezoid, Rotation, H / V-Moire, Degauss, Color Control, Parallel, Information, Language, OSD H / V Poistion, Pin Balpance
Power Management		As per VESA Standard, Lower than EPA's recommendation
VESA DDC 1 / 2B		Basic
Compatibility		VESA, 8514 / A, XGA, EVGA, MAC II
Power Source		100-240 VAC(Universal Power) 1.5A 75W
Safety & Regulation	TCO	TCO'95 / 99
	EMC	FCC Class B, CE,EMC
	Safety	cULus, TÜV-GS, FIMKO, SEMKO, DHHS, PCBC, GOST-R, VCCI
Temperature	Storage	-20 to 60 degree celsius
	Operating	0 to 40 degree celsius
Humidity	Operating	35% to 80% (Non-condensing)
	Storage	5% to 85%
Weight		• Unit : 16.0Kg • Gross Weight :19.0Kg(with carton)
Dimension(W × H × D mm)		404 ×408 ×414mm

▶Specification is subject to change without notice for performance improvement.

Critical Parts Specification

WT62P1

GENERAL DESCRIPTION

The WT62P1 is a microcontroller for digital controlled monitor with Universal Serial Bus(USB)interface. It contains an 8-bit CPU, 32k bytes flash memory, 512 bytes RAM, 14 PWMs, parallel I/Os, SYNC signal processor, time, DDC 1/2B interface, master/slave I2C interface, low speed USB device module, 6-bit A/D converter and watch-dog timer.

FEATURES

- 8-bit 6502 compatible CPU with 6MHz operating frequency
- 32768 bytes flash memory, 512 bytes SRAM.
- 12 MHz crystal oscillator
- 4 channels processor with H+V separation , H/V frequency counter, H/V polarity detection/control and clamp pulse output
- Sync signal processor with H+V separation, H/V frequency counter, H/V polarity detection/control and clamp pulse output
- Six free-running sync signal outputs(Horizontal frequency up to 106KHz)
- Self-test pattern
- DDC 1/2B supported
- Fast mode master slave I^2C interface(up to 400KHz)
- Embedded USB function with endpoint 0 and endpoint 1
- Built-In 3.3V regulator for USB tranceiver
- Watch-dog timer
- Maximum 28 progammable I/O pins
- One 8-bit programmable timer
- 6-bit A/D converter with 4 selectable inputs
- One external interrupt request input
- Low V_{DD} reset

ORDERINF ING ORMATION

Package Type	Part Number
42-pin PDIP	WT62P1-N42
42-oin shrink PDIP	WT62P1-K42
40-pin PDIP	WT62P1-N40
28-pin skinny PDIP	WT62P1-N28
44--pin SOP	WT62P1-S44

PIN CONFIGURATION

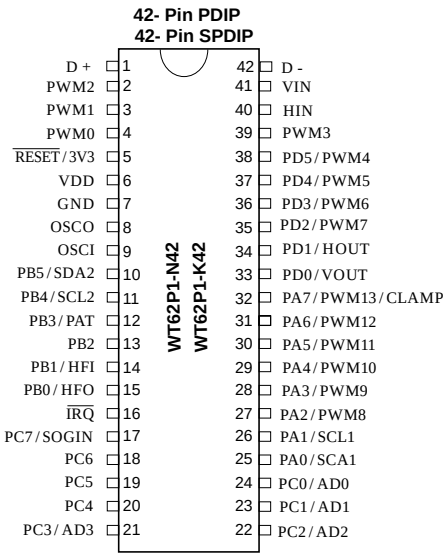

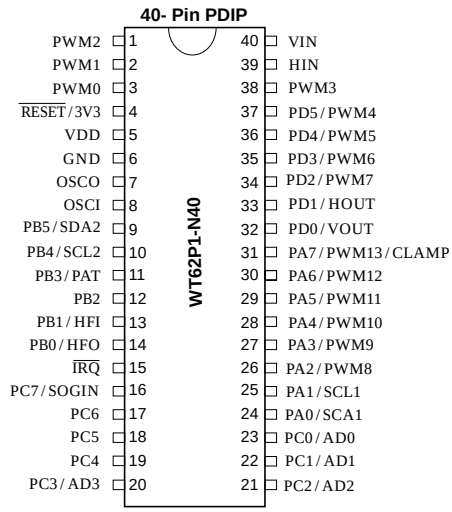

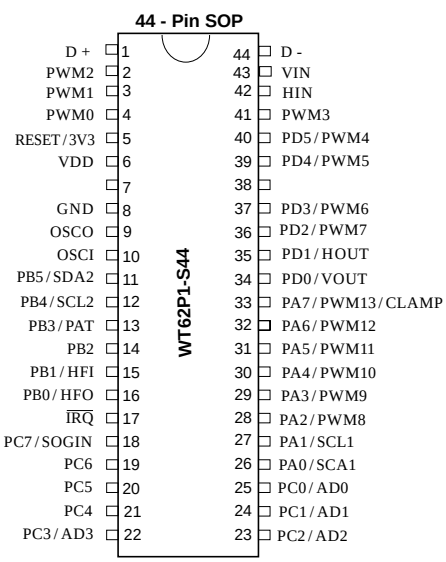

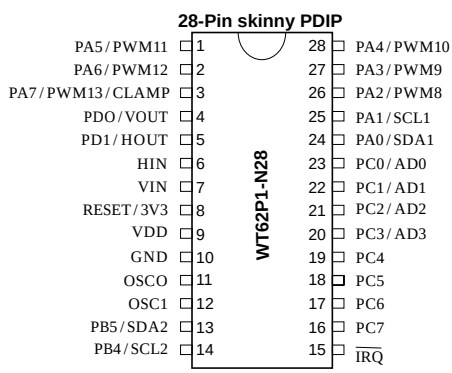

KS24C08

4K 2.5V CMOS Serial EEPROMs

FEATURES

- Single supply with operation down to 2.5V
- Low power CMOS technology
  - 1 mA active current typical
  - 10µA standby current typical at 5.5V
  - 5 µA standby current typical at 3.0V
- Organized as two or fore blocks of 256 bytes (2 × 256 × 8) and (4 × 256 × 8)
- Two wire serial interface bus, 12CTM
- Schmitt tigger, filtered inputs for noise suppression
- Output slope control to eliminate ground bounce
- 100kHz (2.5V) and 400kHz (5V) compatibility
- Self-timed write cycle (including auto-erase)
- Page-write buffer for up to 16 bytes
- 2 ms typical write cycle time for page-write
- Hardware write cycle time for page-write
- Can be operated as a serial ROM
- Factory programming (OTP) available
- ESD protection > 4,000V
- 1,000,000 ERASE / WRITE cycles (typical)
- Data retention > 40 years
- 8-pin DIP, 8-lead or 14-lead SOIC packages
- Available for extended temperature ranges
  - Commercial : 0°C to +70°C
  - Industrial : -40°C to +85°C

DESCRIPTION

The Microchip Technology Inc. 24LC04B / 08B is a 4K-or 8K-bit Electrically Erasable PROM.
The device is organized as two or four blocks of 256 ×8 bit memory with a two wire serial interface.
Low voltage design permits operation down to 2.5 volts with standby and active currents of obly 5μA and 1mA respectively.
The 24LC04B / 08B also has a page-write capability for up to 16 bytes of data. The 24LC04B / 08B is available in the standard 8-pin DIP and both 8-lead and 14-lead surface mount SOIC packages.

BLOCK DIAGRAM

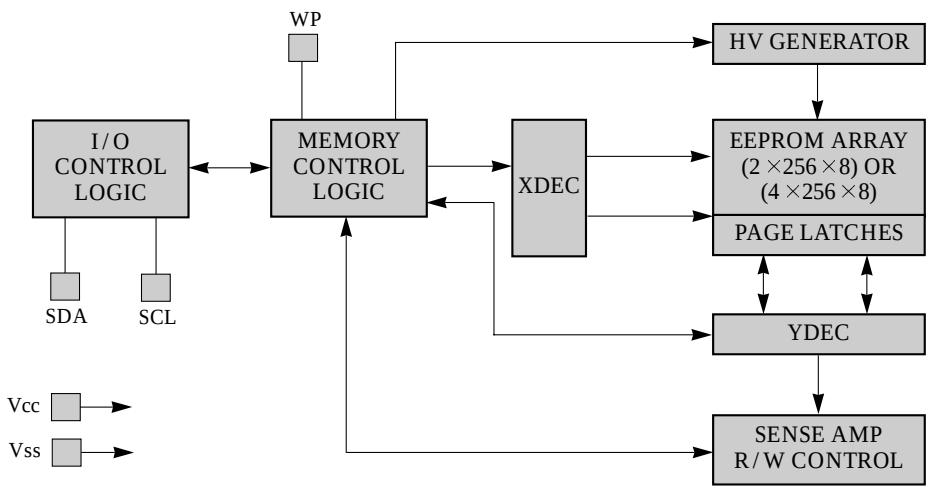

PIN CONFIGURATION

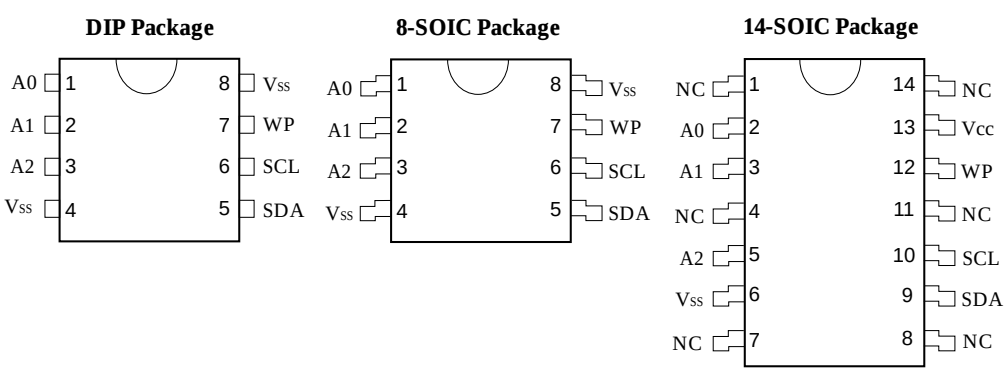

PC is a trademark of Philips Corporation

UC3843

CURRENT MODE PWM CONTROLLER

- OPTIMIZED FOR OFF-LINE AND DC TO DC CONVERTERS
- LOW START-UP CURRENT (<1mA)
- AUTOMATIC FEED FORWARD COMPENSATION
- PULSE-BY-PULSE CURRENT LIMITING
- ENHANCED LOAD RESPONSE CHARACTERISTICS
- UNDER-VOLTAGE LOCKOUT WITH HYSTERESIS
- DOUBLE PULSE SUPPRESSION
- HIGH CURRENT TOTEM POLE OUTPUT
- INTERNALLY TRIMMED BANDGAP REFERENCE
- 500kHz OPERATION
- LOW Ro ERROR AMP

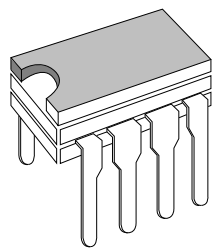

Minidip

PIN CONNECTIONS

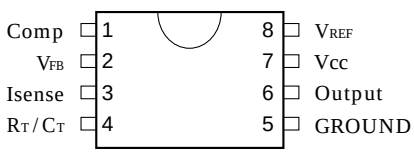

BLOCK DIAGRAM

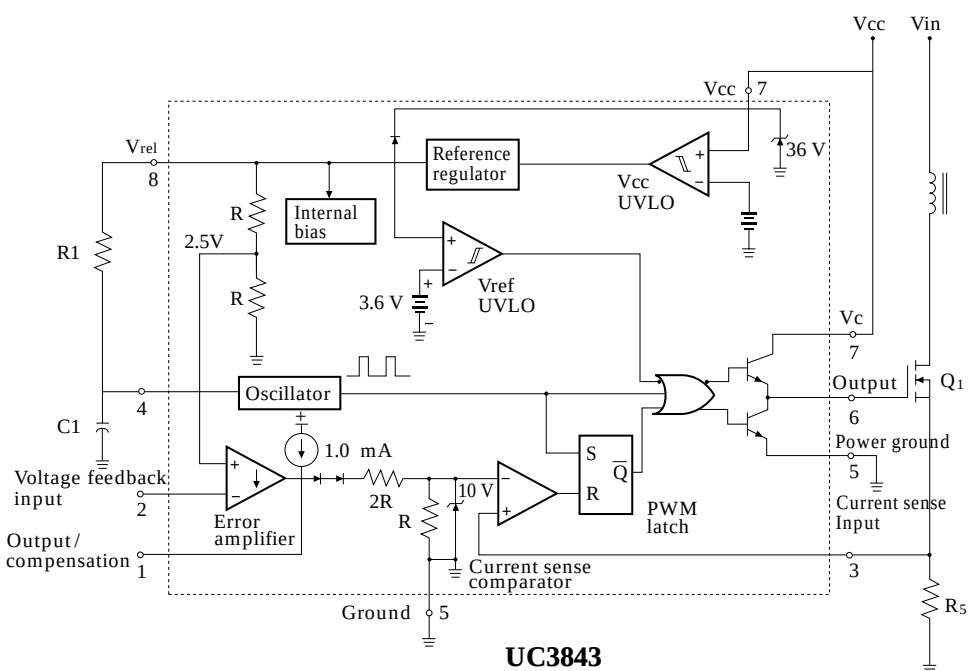

UC3843

TDA9116

FEATURES

General

- ADVANCED I^2C BUS CONTROLLED DEFLECTION PROCESSOR DEDICATED FOR HIGH-END CRT MONITORS
- SINGLE SUPPLY VOLTAGE 12V
- VERY LOW JITTER
- DC/DC CONVERTER CONTROLLER
- ADVANCED EW DRIVE
- ADVANCED ASYMMETRY CORRECTIONS
- AUTOMATIC MULTISTANDARD SYNCHRONIZATION
- VERTICAL DYNAMIC CORRECTION WAVEFORM OUTPUT
- X-RAY PROTECTION AND SOFT-START & STOP ON HORIZONTAL AND DC/DC DRIVE OUTPUTS
- I^2C BUS STATUS REGISTER

Horizontal section

- 150 kHz maximum frequency
- Corrections of geometric asymmetry: Pin cushion asymmetry, Parallelogram
- Tracking of asymmetry corrections with vertical size and position
- Fully integrated internal horizontal moiré cancellation and moiré cancellation output

Vertical section

- 200 Hz maximum frequency
- Vertical ramp for DC-coupled output stage with adjustments of: C-correction, S-correction for super-flat CRT, Vertical size, Vertical position
- Vertical moiré cancellation through vertical ramp waveform
- Compensation of vertical breathing with EHT variation

EW section

- Symmetrical geometry corrections: Pin cushion, Keystone, Top/Bottom corners separately
- Horizontal size adjustment
- Tracking of EW waveform with Vertical size and position and adaptation to frequency
- Compensation of horizontal breathing through EW waveform

Dynamic correction section

- Output with vertical dynamic correction waveform for dynamic corrections like focus, brightness uniformity, ...
- Fixed on screen by means of tracking system

DC/DC controller section

- Step-up and step-down conversion modes
- External sawtooth configuration
- Bus-controlled output voltage
- Synchronization on hor. frequency with phase selection
- Selectable polarity of drive signal

DESCRIPTION

The TDA9116 is a monolithic integrated circuit assembled in a 32-pin shrink dual-in-line plastic package. This IC controls all the functions related to horizontal and vertical deflection in multimode or multi-frequency computer display monitors.

The internal sync processor, combined with the powerful geometry correction block, makes the TDA9116 suitable for very high performance monitors, using few external components.

Combined with other ST components dedicated for CRT monitors (microcontroller, video preamplifier, video amplifier, OSD controller) the TDA9116 allows fully I^2C bus-controlled computer display monitors to be built with a reduced number of external components.

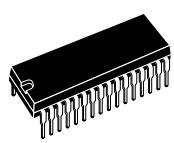

SHRINK 32 (Plastic Package)
ORDER CODE: TDA9116

PIN FUNCTION REFERENCE

Pin	Name	Function
1	H / HVSyn	TTL compatible Horizontal / Horizontal and Vertical Sync. Input
2	VSyn	TTL compatible Vertical Sync. input
3	HLckVBK	Horizontal PLL1 Lock datection and Vertical early Blanking composite output
4	HOscF	High Horizontal Oscillator sawtooth threshold level filter input
5	HPLL2C	Horizontal PLL2 loop Capacitive filter input
6	CO	Horizontal Oscillator Capacitor input
7	HGND	Horizontal section Ground
8	RO	Horizontal Oscillator Resistor input
9	HPLL1F	Horizontal PLL1 loop Filter input
10	HPos1F	Horizontal Position Filter and soft-start time constant capacitor input
11	HDyCor	Horizontal Dynamic Correction output
12	HFly	Horizontal Flyback input
13	RefOut	Reference voltage Output
14	BComp	B+ DC / DC error amplifier(Comparator)output
15	BRegln	Regulation feedback input of the B+ DC / DC converter controller
16	BISense	B+ DC / DC converter current(1) Sense input
17	HEHTln	Input for compensation of Horizontal amplitude versus EHT variation
18	VEHTln	Input for compensation of Vertical amplitude versus EHT variation
19	VOscf	Vertical Oscillator sawtooth low threshold Filter(capacitor to be connected to VGND)
20	VAGCCap	Input for storage Capacitor for Automatic Gain Control loop in Vertical oscillator
21	VGND	Vertical section Ground
22	VCap	Vertical sawtooth generator Capacitor
23	Vout	Vertical deflection drive Output for a DC-coupled output stage
24	EWOut	E / W Output
25	X-Ray	X-Ray protection input
26	HOut	Horizontal drive output
27	GND	Main Ground
28	BOut	B+ DC / DC converter controller Output
29	Vcc	Supply voltage
30	SCL	I^2C bus serial CLock input
31	SDA	I^2C bus serial DAta input / output
32	VDyCOr	Vertical Dynamic Correction output

TDA9302H

- POWER AMPLIHER
- FLYBACKGENERATOR
- THERMAL PROTECTION

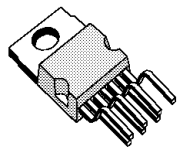

HEPTAWATT
(Plastic Package)

ORDER CODE : TDA9302H

DESCRIPTION

The TDA9302H is a monolihic integrated circuit in HEPTAWATT™ package. It is a high effciency power booster fordirect driving of vertical windings of TV yokes. It is intended foruse in Color and B & W televisionas wellas in monitors and displays.

PIN CONNECTIONS(top view)

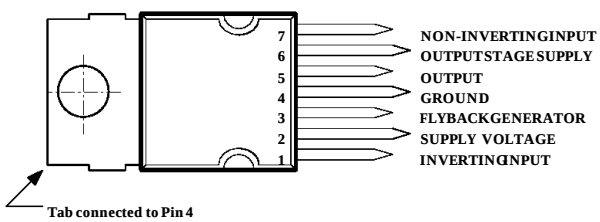

BLOCK DIAGRAM

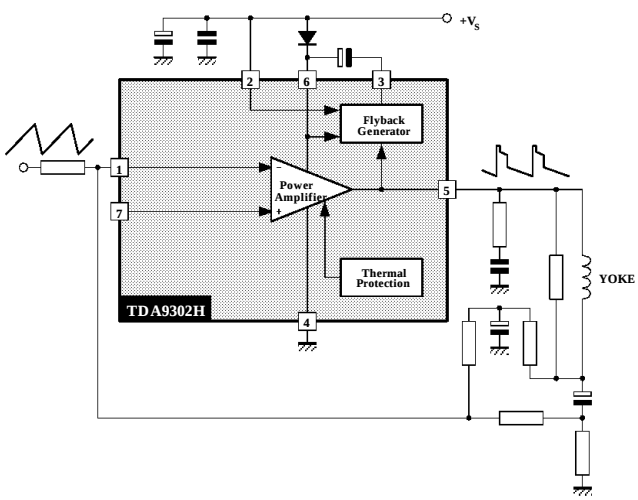

ABSOLUTE MAXIMUM RATINGS AT $T_A = 25^oC$

Symbol	Parameter	Value	Unit
V_S	Supply Voltage (pin 2)	35	V
V_5, V_6	Flyback Peak Voltage	60	V
V_3	Voltage at Pin 3	+ V_s	
V_1, V_7	Amplifier Input Voltage	+ V_s ± 0.5	V
I_o	Deflection Output Current	+ 1.8	A
I_3	Pin 3 DC Current at $V_5 < V_2$	100	mA
P_{tot}	Total Power Dissipation at T_{case} = 90°C	15	W
T_{stg}, T_j	Storage and Junction Temperature	± 40, +150	5C

THERMAL DATA

Symbol	Parameter	Value	Unit
$R_{th\ (j±c)}$	Thermal Resistance Junction-case Max.	4	5C/W

RECOMMENDED OPERATING CHARACTERISTICS AT $T_A = 25^oC$

Symbol	Parameter	Test Conditions	Min.	Typ.	Max.	Unit
V_{2M}	Recommended Supply Voltage			25		V
V_{2R}	Operating Supply Voltage Range		15		30	V
I_{5PP}	Deflection Output Current				2	App

ELECTRICAL CHARACTERISTICS

(refer to the test circuits, V_S = 35V, T_{amb} = 25°C unless otherwise specified)

Symbol	Parameter	Test Conditions	Min.	Typ.	Max.	Unit	Fig.
I_2	Pin 2 Quiescent Current	I_3 = 0, I_5 = 0			16	mA	1a
I_6	Pin 6 Quiescent Current	I_3 = 0, I_5 = 0			36	mA	1a
I_1	Amplifier Input Bias Current	V_1 = 1 V, V_7 = 2 V		± 0.1	± 1	mA	1a
		V_1 = 2 V, V_7 = 1 V		± 0.1	± 1	mA	1a
V_{3L}	Pin 3 Saturation Voltage to GND	I_3 = 20 mA		1	1.5	V	1c
V_5	Quiescent Output Voltage	V_s = 35V, R_a = 39 kW		18		V	1d
V_{5L}	Output Saturation Voltage to GND	I_5 = 1 A		0.9	1.3	V	1c
		I_5 = 0.7 A		0.7	1	V	1c
V_{5H}	Output Saturation Voltage to Supply	± I_5 = 1 A		1.5	2	V	1b
		± I_5 = 0.7 A		1.3	1.8	V	1b
T_j	Junction Temperature for Thermal Shut Down			140		5C	

Figure 1 : DC Test Circuits.

Figure 1 a : Measurement of I_1 ; I_2 ; I_6

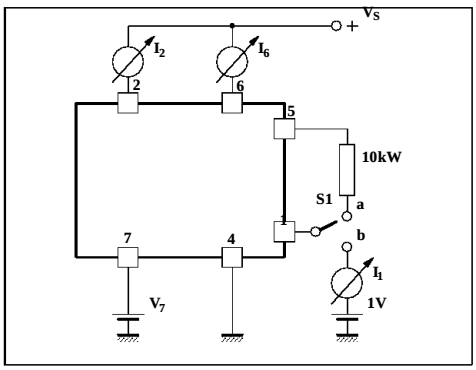

S_1 : (a) I_2 and I_6 ; (b) I_1

Figure 1 b : Measurement of V_{5H}

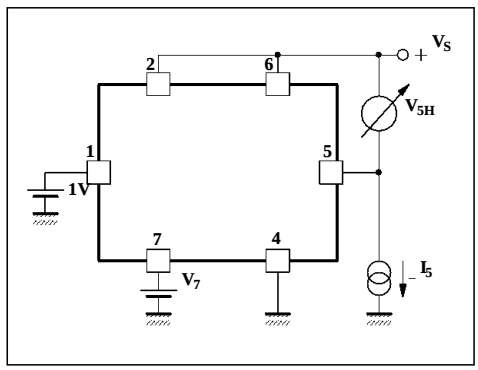

Figure 1 c : Measurement of V_{3L} ; V_{5L}

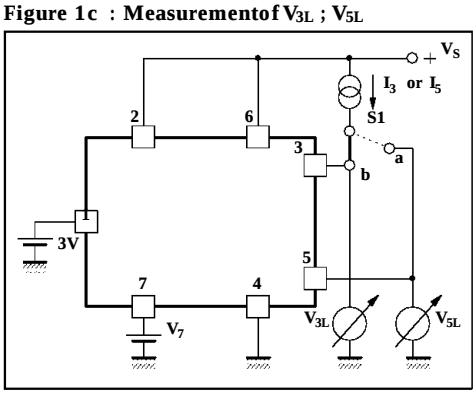

S_1 : (a) V_{3L} ; (b) V_{5L}

Figure 1 d : Measurement of V_5

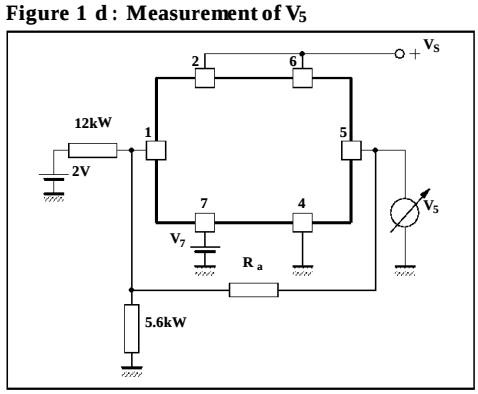

PACKAGE MECHANCAL DATA : 9 PINS - PLASTIC HEPTAWATT

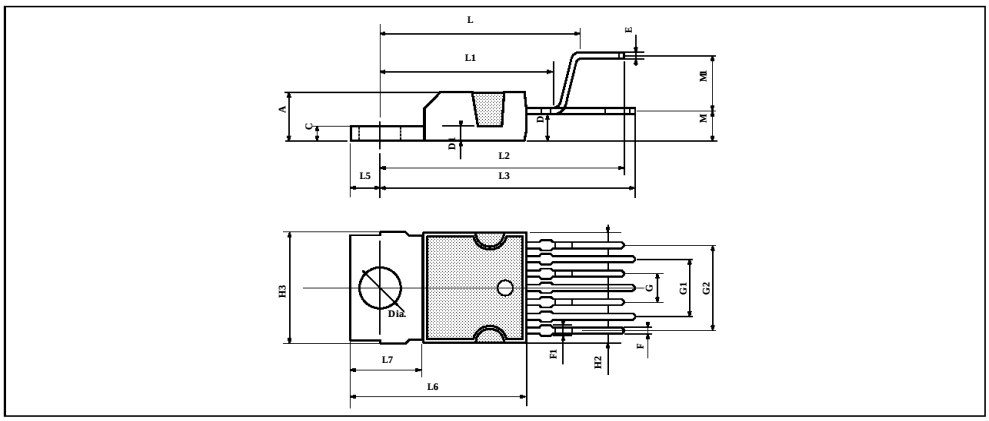

Dimensions	Millimeters			Inches		
	Min.	Typ.	Max.	Min.	Typ.	Max.
A			4.8			0.189
C			1.37			0.054
D	2.4		2.8	0.094		0.110
D1	1.2		1.35	0.047		0.053
E	0.35		0.55	0.014		0.022
F	0.6		08	0.024		0.031
F1			0.9			0.035
G	2.41	2.54	2.67	0.095	0.100	0.105
G1	4.91	5.08	5.21	0.193	0.200	0.205
G2	7.49	7.62	7.8	0.295	0.300	0.307
H2			10.4			0.409
H3	10.05		10.4	0.396		0.409
L		16.97			0.668	
L1		14.92			0.587	
L2		21.54			0.848	
L3		22.62			0.891	
L5	2.6		3	0.102		0.118
L6	15.1		15.8	0.594		0.622
L7	6		6.6	0.236		0.260
M		2.8			0.110	
M1		5.08			0.200	
Dia.	3.65		3.85	0.144		0.152

Information furnished is believed to be accurate and reliable. However, SGS-THOMSON Microelectronics assumes no responsibility for the consequences of use of such information nor for any infringement of patents or other rights of third parties which may result from its use. No licence is granted by implication or otherwise under any patent or patent rights of SGS-THOMSON Microelectronics. Specifications mentioned in this publication are subject to change without notice. This publication supersedes and replaces all information previously supplied. SGS-THOMSON Microelectronics products are not authorized for use as critical components in life support devices or systems without express written approval of SGS-THOMSON Microelectronics.

Purchase of I^2C Components of SGS-THOMSON Microelectronics, conveys a license under the Philips I^2C Patent. Rights to use these components in a I^2C system, is granted provided that the system conforms to the I^2C Standard Specifications as defined by Philips.

SGS-THOMSON Microelectronics GROUP OF COMPANIES
Australia - Brazil - China - France - Germany - Hong Kong - Italy - Japan - Korea - Malaysia - Malta - Morocco
The Netherlands - Singapore - Spain - Sweden - Switzerland - Taiwan - Thailand - United Kingdom - U.S.A.

KA2500B

IIC BUS CONTROLLED R/G/B VIDEO AMPLIFIER

The KA2500 is a very high frequency video amplifier system with IIC Bus controlled used in Monitor with high resolution up to 1280X1024 It contains 3 matched R/G/B video Amplifiers with OSD interface and provides a flexible interfacing to IIC Bus controlled adjustment system.

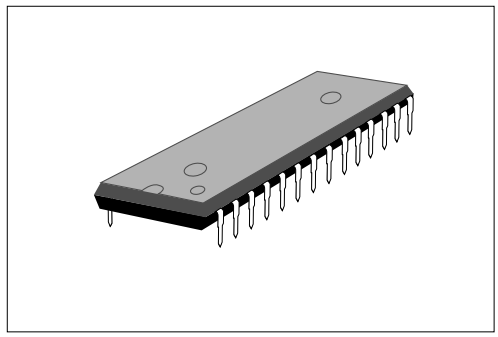

FUNCTIONS

- R/G/B Video Amplifier
- OSD Interface
- IIC BUS Control
- Contrast/OSD Control
- Brightness Control
- Cut-off Brightness Control
- R/G/B SUB Contrast / Cut Off Control
- Blank / Clamp Gate
- Half tone
- Brightness Uniformity

FEATURES

- 3Channel R/G/B Video Amplifier, 150MHz @f-3dB
- IIC Bus Control Items
  - Contrast Control
  - SUB Contrast Control For Each Channel
  - Brightness Control
  - OSD Contrast Control
  - Cut-off Brightness Control
  - Cut-off Control For Each Channel
  - Switch Registers for SBLK and Video Half Tone and cut-off INT/EXT
- SUB Contrast Control Range : 11dB
- Capable of 7.0V_{p-p} Output Swing Range
- Video / OSD High speed Switch
- Clamp Gate With Anti OSD sagging
- B/U(Brightness Uniformity) Interface
- Video Input Clamp, BRT Clamp
- Video Half Tone Function on OSD Picture
- OSD Interface, OSD BLK
- ABL
- TTL R/G/B OSD Inputs, 800MHz bandwidth
- Contrast Control Range : 38dB
- OSD Contrast Control Range : 38dB

PIN CONFIGURATIONS

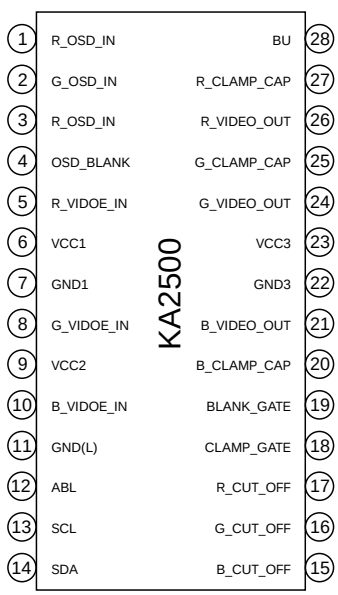

LM358

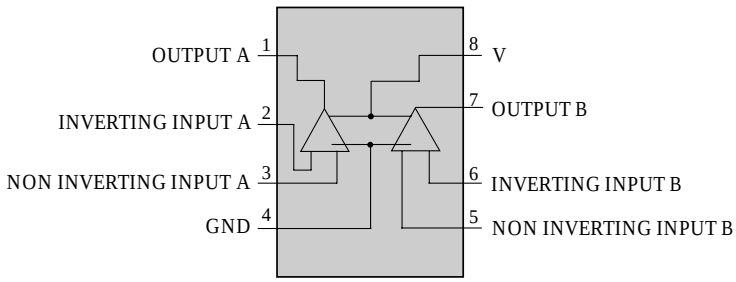

Voltage Detector ICs

Type No.	Function	Operating Voltage (V)	Package
KIA7019P/F ~7045P/F	CPU Reset, Low Voltage Detector	1.9 ~ 4.5	TO - 92
KIA7419P/F ~7445P/F	CPU Reset, High Voltage Detector	1.9 ~ 4.5	

Voltage Regulator ICs

Type No.	Function	Typ Vo(V)	Max. Io(A)	Max. Vin(V)	Max. PD(W)	Package
KIA7805P/PI	1.0A 3-Terminal Regulator	5	1.0	35	20.8	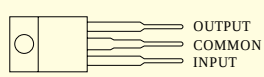 TO-220AB
KIA7806P/PI		6				
KIA7808P/PI		8				
KIA7809P/PI		9				
KIA7810P/PI		10				
KIA7812P/PI		12				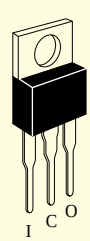
KIA7815P/PI		15				
KIA7818P/PI		18		40		
KIA7820P/PI		20				
KIA7824P/PI		24				

TT2062

Horizontal Deflection Output For High Resolution Display, Color TV
High Speed Switching Applications

- High Voltage : V_{CBO}=1500V
- Low Saturation Voltage : $V_{CE(sat)}$=3V(Max.)
- High Speed : tf=0.15μs(Typ.)
- Collector Metal (Fin) is Fully covered with Mold Resin

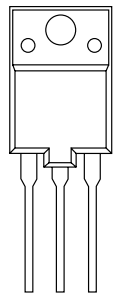

Maximum Ratings (Ta=25°C)

CHARACTERISTIC		SYMBOL	RATING	UNIT
Collector-Base Voltage		V_{CBO}	1500	V
Collector-Emitter Voltage		V_{CEO}	800	V
Emitter-Base Voltage		V_{EBO}	5	V
Collector Current	DC	I_C	18	A
	Pulse	I_{CP}	35	
Base Current		I_B	4	A
Collector Power Dissipation (Tc=25°C)		P_C	85	W
Junction Temperature		T_j	150	°C
Storage Temperature Range		T_{stg}	-55～150	°C

FMP-2FUR

CHARACTERISTIC	SYMBOL	RATING		UNIT
		A	B	
Transient Peak Reverse Voltage	V_{RSM}	600	1500	V
Peak Reverse Voltage	V_{RM}	600	1500	V
Average Forward Current	$I_{F(AV)}$	5.0		V
Peak Surge Forward Current	I_{FSM}	50		A
I^2t Limiting Value	I^2t	12.5		A^2s
Junction Temperature	T_j	-40 ～ +150		°C
Storage Temperature	T_{stg}	-40 ～ +150		°C

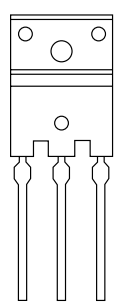

LM2437

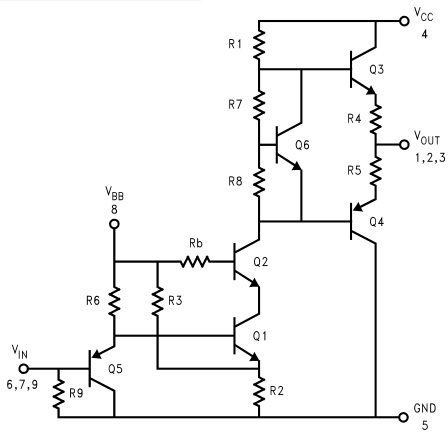

Simplified Schematic Diagram (One Channel)

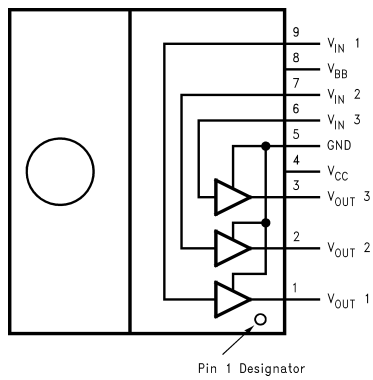

Top View

General Description

The LM2437 is an integrated high voltage CRT drive circuit designed for use in color monitor applications. The IC con-tains three high input impedance. wide band amplifiers which directly drive the RGB cathodes of a CRT. Each chan-nel has its gain intemally set to-14 and can drive CRT ca-pacitive loads as well as resistive loads present in other ap-plications, limited only by the package's power dissipation.

The IC is packaged in an industry standard 9-lead TO-220 molded plastic power package.See Thermal Considerations section.

Features

- Well matched with LM1279 video preamp
- 0V to 4.5V input range
- Stable with 0-20 pF capacitive loads and inductive peaking networks
- Convenient TO-220 staggered lead package style
- Srandard LM243X Family pinout which is designed for easy PCB layout

Applications

- 1024 x 768 displays up to 85Hz refresh
- Pixel clock frequencies up to 100MHz
- Monitors using video blanking

MTV021

FEATURES

- Horizontal SYNC input up to 120 KHz.
- On-chip PLL circuitry up to 96MHz
- Programmable horizontal resolutions up to 1524 dots per display row
- Full-screen display consists of 15(rows) by 30(columns) characters.
- 12 x 18 dot matrices per character.
- Total of 272 characters and graphic fonts, including 256 standard and 16 multi-color mark ROM fonts.
- 8 color-selectable maximum per display character.
- 7 color-selectable maximum for charater background.
- Double character height and / or width conrrol.
- Programmable positioning for display screen center.
- Bordering, shadowing and blinking effect.
- Programmable character height(18 to 71 nl lines)control.
- Row to row spacing register to manipulate the constant display height.
- 4 programmable background windows with multi-level operation and shadowing on window effect.
- Software clears bit for full-screen erasing.
- Half tone and fast blanking output.
- Fade-in fade-out effect.
- 8-channel / 8-bit PWM D / A converter output.
- Compatible with SPI bus or I^2C interface with slave address 7AH(slave address is mask option)
- 16-pin,20-pin or 24-pin PDIP package.

GENERAL DESCRIPTION

- MTV021 is designed for monitor applications to display built-in characters or fonts onto monitor screen. The display operation occurs by transferring data and control information from the micro-controller to RAM through a serial data interface. It can execute full-screen display automatically, as well as specific functions such as character background color, bordering, shadowing, blinking, double height and width, font by font color control, frame positioning, frame size control by character height and row-to-row spac-ing, horizontal display resolution, full-screen erasing, fade-in.fade-out effect, windowing effect and shad-owing on window.
- MTV021 provides 256 standard and 16 multi-color characters and graphic fonts for more efficacious applications. The full OSD menu is formed by 15 rows x30 columns, which can be positioned any-where on the monitor screen by changing vertical or horizontal delay
- Moreover, MTV021 also provides 8 PWM DAC channels with 8-bit resolution and a PWM clock out put for external digital-to-analog control.

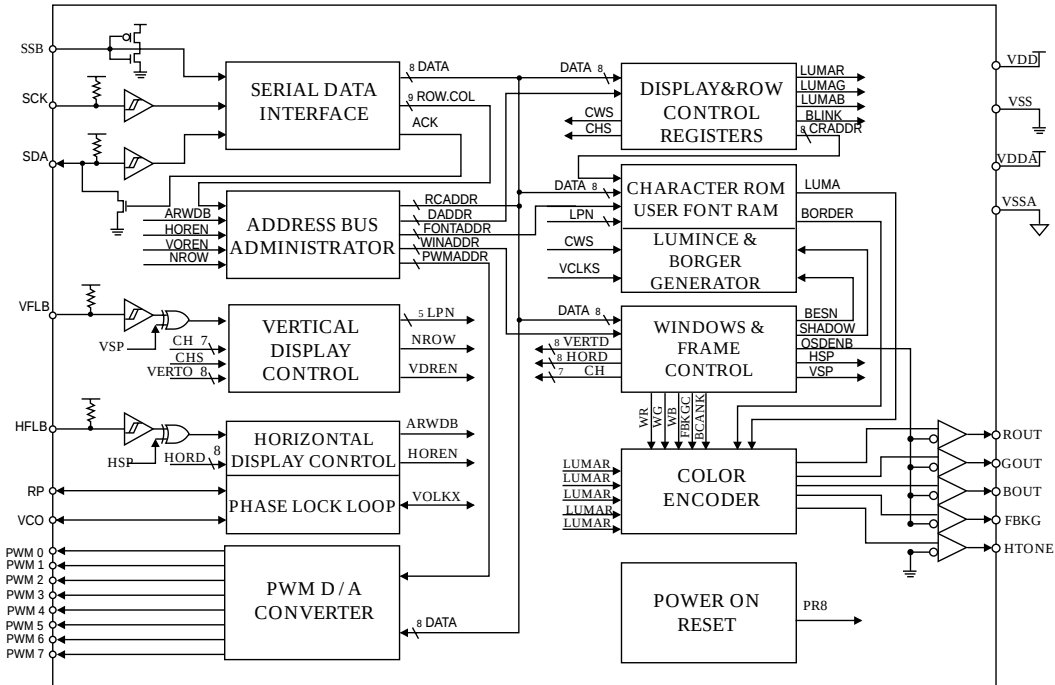
SSB
SCK
SDA
SERIAL DATA INTERFACE
8 DATA
9 ROW.COL
ACK
ARWDB
HOREN
VOREN
NROW
ADDRESS BUS ADMINISTRATOR
RCADDR
DADDR
FONTADDR
WINADDR
PWMADDR
VFLB
VSP
CH 7
CHS
VERTO 8
VERTICAL DISPLAY CONTROL
5 LPN
NROW
VDREN
HFLB
HSP
HORD 8
HORIZONTAL DISPLAY CONRTOL
ARWDB
HOREN
RP
VCO
PHASE LOCK LOOP
VOLKX
PWM 0
PWM 1
PWM 2
PWM 3
PWM 4
PWM 5
PWM 6
PWM 7
PWM D / A CONVERTER
8 DATA
DATA 8
DISPLAY&ROW CONTROL REGISTERS
CWS
CHS
LUMAR
LUMAG
LUMAB
BLINK
8 CRADDR
DATA 8
CHARACTER ROM USER FONT RAM
LUMA
LPN
BORDER
CWS
LUMINCE & BORGER GENERATOR
VCLKS
DATA 8
WINDOWS & FRAME CONTROL
BESN
SHADOW
OSDENB
HSP
VSP
8 VERTD
8 HORD
7 CH
WR
WG
WB
FBKGC
BCANK
LUMAR
LUMAR
LUMAR
LUMAR
LUMAR
COLOR ENCODER
ROUT
GOUT
BOUT
FBKG
HTONE
POWER ON RESET
PR8
VDD
VSS
VDDA
VSSA

PIN CONNECTION

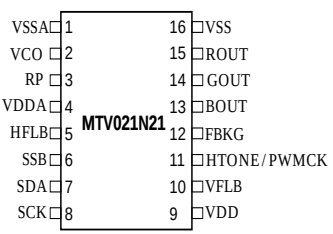

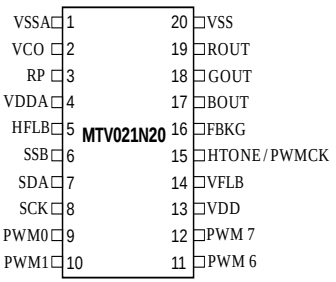

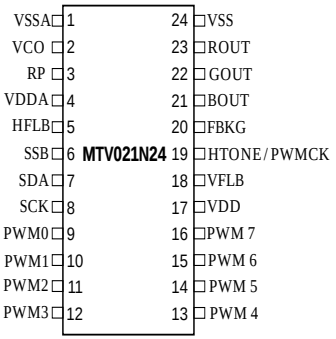

PIN DESCRIPTIONS

Name	I/O	PIN NO.			Descriptions
		N16	N20	N24	
VSSA	-	1	1	1	Analog ground. This ground pin is used to internal analog circuitry.
VCO	I/O	2	2	2	Voltage Control Oscillator. This pin is used to control the internal oscillator frequency by DC voltage input from external low pass filter.
RP	I/O	3	3	3	Bias Resistor. The bias resistor is used to requlate the appropriate bias current for internal oscillator to resonate at specific dot frequency.
VDDA	-	4	4	4	Analog power supply. Positive 5V DC supply for internal analog circuity, Any a 0.1uF decoupling capacitor shouid be connected across to VDDA and VSSA.
HFLB	I	5	5	5	Horizontal input. This pin is used to input the horizontal synchronizing signal. It is a leading edge triggered and has an internal pull-up resistor.
SSB	I	6	6	6	Serial interface enable. It is used to enable the serial data and is also used to select the operation of I^2C or SPI bus. If this pin is left floating, I2C bus is enabled, otherwise the SPI bus is enabled.
SDA	I	7	7	7	Serial data input . The external data transfer through this pin to internal display registers and control registers. lt has an internal pull-up resistor.
SCK	I	8	8	8	Serial clock input. The clock-input pin is used to synchronize the data transfer. It has an internal pull-up resistor.
PWM0	O	-	9	9	Open-Drain PWM D/A converter 0. The output pulse width is programmable by the register of Row 15, Column 23.
PWM1	O	-	10	10	Open-Drain PWM D/A converter 1. The output pulse width is programmable by the register of Row 15, Column 24.
PWM2	O	-	-	11	Open-Drain PWM D/A converter 2. The output pulse width is programmable by the register of Row 15, Column 25.
PWM3	O	-	-	12	Open-Drain PWM D/A converter 3. The output pulse width is programmable by the register of Row 15, Column 26.

Name	I/O	PIN NO.			Descriptions
		N16	N20	N24	
PWM4	O	-	-	13	Open-Drain PWM D/A converter 4. The output pulse width is programmable by the register of Row 15, Column 27.
PWM5	O	-	-	14	Open-Drain PWM D/A converter 5. The output pulse width is programmable by the register of Row 15, Column 28.
PWM6	O	-	11	15	Open-Drain PWM D/A converter 6. The output pulse width is programmable by the register of Row 15, Column 29.
PWM7	O	-	12	16	Open-Drain PWM D/A converter 7. The output pulse width is programmable by the register of Row 15, Column 30.
VDD	-	9	13	17	Digital power supply. Positive 5V DC supply for internal digital circuitry and a 0.1uF decoupling capacitor should be connected across to VDD and VSS.
VFLB	I	10	14	18	Vertical input. This pin is used to input the vertical synchronizing signal. it is leading triggered and has an internal pull-up resistor.
HTONE/ PWMCK	O	11	15	19	Half tone output /PWM clock output. This is a multiplexed pin selected by PWMCK bit. This pin can be a PWM clock or used to attenuate R.G.B gain of VGA for the transparent windowing effect.
FBKG	O	12	16	20	Fast Blanking output. It is used to cut off external R,G,B signals of VGA white this chip is displaying characters or windows.
BOUT	O	13	17	21	Blue color output. It is a blue color video signal output.
GOUT	O	14	18	22	Green Color output. It is a green color video signal output.
ROUT	O	15	19	23	Red Color output. It is a red color video signal output.
VSS	O	16	20	24	Digital ground. This ground pin is used to internal digital circuity.

FUNCTIONAL DESCRIPTIONS

SERIAL DATA INTERFACE

The serial data interface receives data transmitted from an external controller. And there are 2 types of bus can be accessed through the serial data interface, one is SPI bus and other is I^2C bus.

SPI bus

While SSB pin is pulled to " high" or " low" level, the SPI bus operation is selected. And a valid transmission should be starting from pulling SSB to "low" level, enabling MTV021 to receiving mode, and retain "low"level until the last cycle for a complete data packet transfer. The protocol is shown in Figure 1.

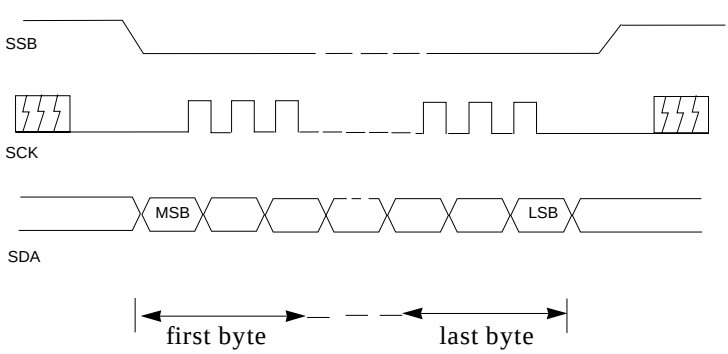

TRANSISTORS

Type No.	MAX. RATINGS			$V_{CE(SET)}$		Max				Package
	V_{CEO} (V)	I_C (mA)	P_C (mW)	(V)	I_C (mA)	I_B (mA)	1	2	3	
KSP45	350	300	1.5W	0.5	10	1	E	B	C	TO-92
KTA1273Y	-30	-2.0	1W	-2.0	-1.5	-30	E	C	B	TO-92L
KSA928Y	-30	-2.0A	1W	-2.0	-1.5A	-30	E	C	B	TO-92L
KSA1013	-160	-1.0A	0.9W	-1.5	-500	-50	E	C	B	TO-92L
KSD1616Y	50	1	0.75W	0.3	1A	50	E	C	B	TO-92
KSA733CY	-50	-150	250	-0.3	-100	-10	E	C	B	TO-92
IRF630A	200V	9A	72W	0.4 Ω(MAX) RDS(ON)		±30V (VGSS)	G	D	S	TO-220AB
KTC3198Y	50	150	625	0.25	100	10	E	C	B	TO-92
KSC945CY	50	150	250	0.15	100	10	E	C	B	TO-92
KTC3205Y	30	2A	1W	2.0	1.5A	30	E	B	C	TO-92L
KSP42	300	500	0.625	0.5	20	2	E	B	C	TO-92
KSP92	-300	-500	0.625	-0.5	-20	-2	B	B	C	TO-92
KRC102M	50	100	400	-0.3	-100	-0.88	E	C	B	TO-92M
2SK2545	600V (VDSS)	6A(ID)	40W (PT)	1.2 Ω (MAX) RDS(ON)		±30V (VGSS)	G	D	S	TO-220IS
YTA630	200V (VDSS)	10A(ID)	75W (PT)	0.8 Ω (MAX) RDS(ON)		±20V (VGSS)	G	D	S	TO-220AB

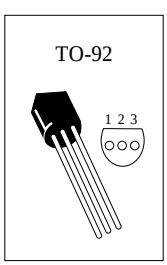

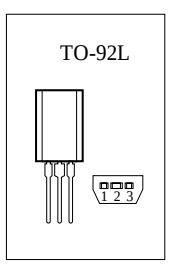

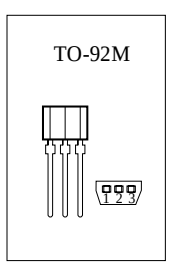

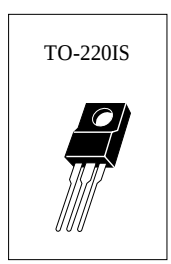

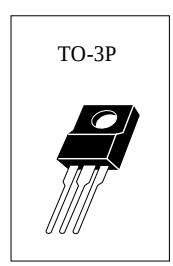

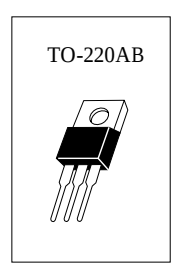

MODEL : F770D
TYPE NO : C17F05071
CHASSIS NO : C-1723

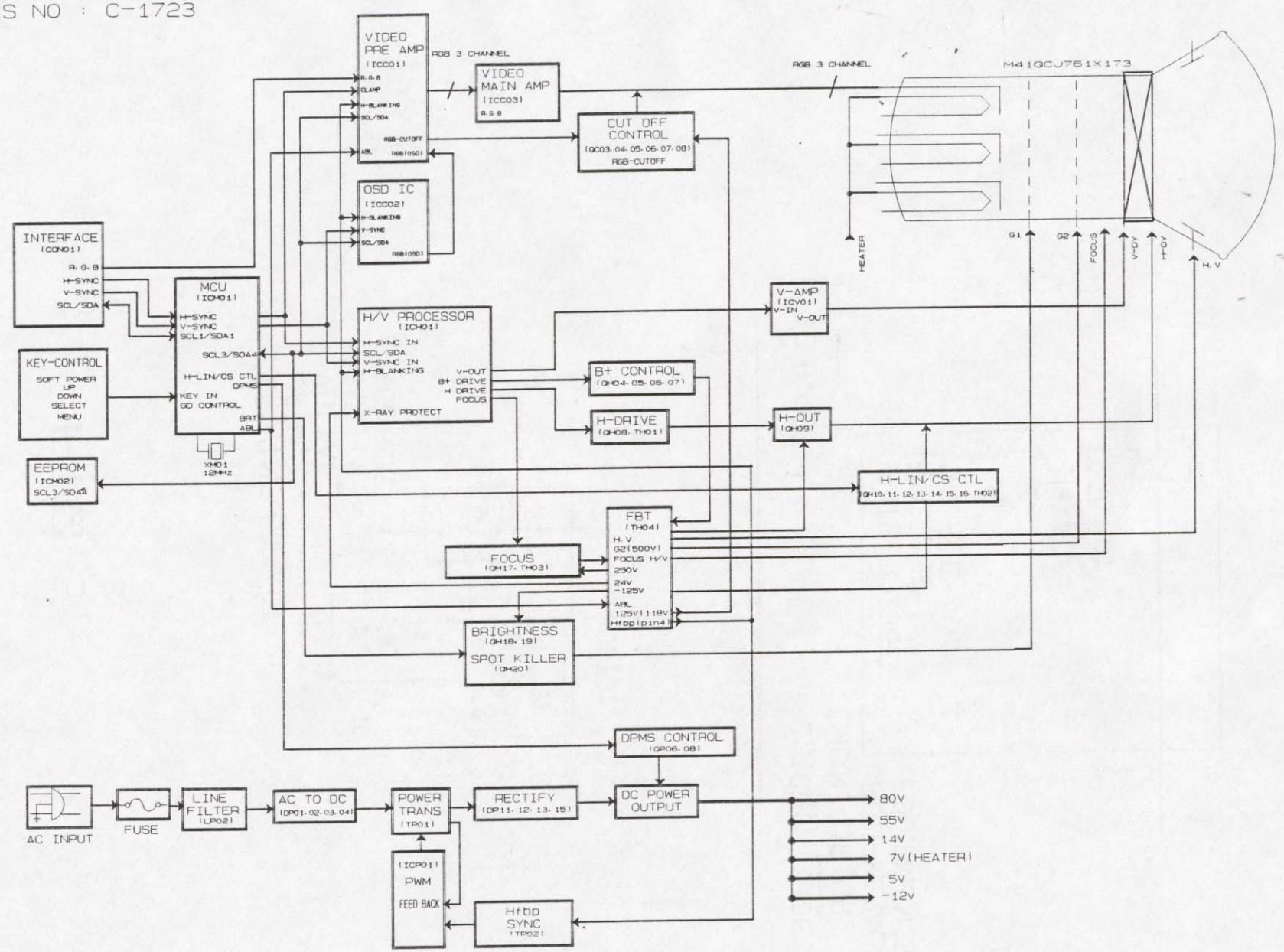

WARNING: THIS EQUIPMENT CONTAINS SAFETY & CORH CRITICAL COMPONENTS. ALL PARTS SHOWN IN THE ⚠ MARKS OF THE SCHEMATIC ARE SAFETY. REPLACE SAFETY CHITICAL COMPONENTS ONLY WITH MANUFACTURERS RECOMMENED PARTS LIST FOR EXACT REPLACEMENTS.

NOTE:
1. RESISTANCE IS SHOWN IN OHM K=1,000 M=1,000,000 RATED POWER OF RESISTOR NOT NOTED IN SCHEMATIC DIAGRAM IS 1/8W A-CARBON.
2. CAPACITANCE IS SHOWN OF AND NOTED CAPACITANCES IS SHOWN uF. uF=1,000,000pF RATED VOLTAGE OF CONDENCER NOT NOTED IN SCHEMATIC DIAGRAM IS 50V.
3. ABBREVIATION AND SYMBOL
   PP: POLYESTER PP: POLYPROPYLENE
4. THIS SCHEMATIC DIAGRAM IS SUBJECTED TO CHANGE WITHOUT NOTICE FOR FURTHER IMPROVEMENT.

DWG. REV.	A	DESCRIPTION		DOC. NO.	DATE	APPROVAL
DWG. NO.		SIGNATURE		DATE	INSP	SHEET NO.
TITLE	F770D	DWN	D. Y. KIM	2001.07.23		1/1
		CHK	B. H. KIM	2001.07.23		
HYUNDAI ELECTRONICS		APP	Y. K. BYUN	2001.07.23		

Replacement Parts List

PRODUCT SAFETY NOTICE : COMPONENTS MARKED WITH ⚠ HAVE SPECIAL CHARACTERISTICS IMPORTANT TO SAFETY.

ABBREVIATIONS :

RD R-CARBON
RS R-METAL OXIDE
RX R-CEMENT
RN R-METAL(±1%)

CK C-CERAMIC, HK
CE C-ELECTROLYTIC
CC C-CERAMIC, TEMP
CQ C-POLYESTER, C-POLYPROPYLENE
CF C-METAL POLYESTER C-METAL POLYPROPYLENE

NOTE : COMPONENTS OF THIS PARTS LIST CAN BE CHANGED FOR QUALITY IMPROVEMENT WITHOUT INFORMATION.

MAIN BOARD

NUM.	LOCATION	PART NUMBER	DESCRIPTION	REMARK
1		B4210324302	KIT COVER,F770D EXP	
2		6201279100	COVER REAR,V770	
3		6201290001	COVER F.ASSY,F770D	
4		B4214000701A	SPRING COM	
5		6201287200	COVER FRONT,F790D	
6		6215233000	KNOB POWER,F790D	
7		6215233100	KNOB CONTROL,F790D	
8		6215233200	CAP COVER "L",F790D	
9		6215233300	CAP COVER "R",F790D	
10		6220083400	LENS LED,F790D	
11		B4210328305	PACKING ASSY,F791(PE,N)	
12		B4209501203A	BAG PE,SET(RECYCLE MARK'G	
13		6243037900	MANUAL PE BAG	
14		6253114500	CUSHION LEFT,EPS F791	
15		6253114600	CUSHION RIGHT,EPS F791	
16		E4205017701	MAIN ASSY,F771 EXP	
17		E4208719901	PCB ASSY,F771 EXP	
18		B4008500100A	CABLE TIE	
19		E4208519901	PCBA MA(I1*),F771 EXP	
20		E4208819901	PCBA MA(I2*),F771 EXP	
21		E4208919901	PCBA MA(I3*),F771 EXP	
22		E4208419961	PCBA MA(A6*),F771	
23		E4208419951	PCBA MA(A5*),F771	
24		E4208419941	PCBA MA(A4*),F771	
25		304010088302	PCB-SINGLE,V771/HMO MAIN	
26	BH01	3540200058	BD-FER,BFS3550	
27	BH02	375300002401	WIRE-NS-S43MM TAP. SDA 1/	
28	BH03	3540200103	BD-FER,HF70 BTL 3.5*6B	
29	BH04	3540200059	BD-FER,BFS3580	
30	BH05	RD-4P0T0750J	RES-CF,RD 1/4W 75 OHM J	
31	BP01	3540200059	BD-FER,BFS3580	
32	BP02	3540200058	BD-FER,BFS3550	
33	BV01	3540200058	BD-FER,BFS3550	
34	BV02	3540200059	BD-FER,BFS3580	
35	CH56	213104002002	CAP-MULT,0.1UF 50V Z AXI	
36	CM05	213220000202	CAP-MULT,22PF 50V J AXI	
37	CM06	213220000202	CAP-MULT,22PF 50V J AXI	
38	CM10	213330000402	CAP-MULT,33PF 50V J AXI	
39	CP13	213471000702	CAP-MULT,470PF 50V J AXI	
40	CP14	213471000702	CAP-MULT,470PF 50V J AXI	
41	DH01	DT1N4148	DIODE,1N4148 TAPING	
42	DH02	DT1N4148	DIODE,1N4148 TAPING	
43	DH03	DT1N4148	DIODE,1N4148 TAPING	
44	DH04	DT1N4937	DIODE,1N4937 TAPING	
45	DH05	DT1N4148	DIODE,1N4148 TAPING	
46	DH06	DT1N4148	DIODE,1N4148 TAPING	
47	DH07	3100500178	DI-SW,UF1G-5705 LEAD	

NUM.	LOCATION	PART NUMBER	DESCRIPTION	REMARK
48	DH08	375300002401	WIRE-NS-S43MM TAP. SDA 1/	
49	DH10	DTUF4004	DIODE,UF4004	
50	DH13	3100500178	DI-SW,UF1G-5705 LEAD	
51	DH14	DT1N4007	DIODE,1000V 1.0A TAP	
52	DH15	DT1N4007	DIODE,1000V 1.0A TAP	
53	DH16	DT1N4007	DIODE,1000V 1.0A TAP	
54	DH17	DT1N4007	DIODE,1000V 1.0A TAP	
55	DH18	DT1N4007	DIODE,1000V 1.0A TAP	
56	DH19	DT1N4937	DIODE,1N4937 TAPING	
57	DH20	DT1N4937	DIODE,1N4937 TAPING	
58	DH21	DT1N4936	DIODE,400V 1.0A 1N4936	
59	DH22	DT1N4148	DIODE,1N4148 TAPING	
60	DH23	DT1N4148	DIODE,1N4148 TAPING	
61	DH24	DT1N4007	DIODE,1000V 1.0A TAP	
62	DH25	DT1N4148	DIODE,1N4148 TAPING	
63	DH26	DT1N4007	DIODE,1000V 1.0A TAP	
64	DH27	DT1N4937	DIODE,1N4937 TAPING	
65	DH28	DTUF4007	DIODE,UF4007	
66	DH30	DT1N4936	DIODE,400V 1.0A 1N4936	
67	DM01	DT1N4148	DIODE,1N4148 TAPING	
68	DP01	DT1N5398	DIODE 1N5398 TAPING	
69	DP02	DT1N5398	DIODE 1N5398 TAPING	
70	DP03	DT1N5398	DIODE 1N5398 TAPING	
71	DP04	DT1N5398	DIODE 1N5398 TAPING	
72	DP06	DT1N4937	DIODE,1N4937 TAPING	
73	DP07	DT1N4937	DIODE,1N4937 TAPING	
74	DP08	DT1N4148	DIODE,1N4148 TAPING	
75	DP09	DT1N4148	DIODE,1N4148 TAPING	
76	DP12	DTUF4007	DIODE,UF4007	
77	DP13	DTUF4004	DIODE,UF4004	
78	DP14	DTUF4004	DIODE,UF4004	
79	DV01	DT1N4004	DIODE,400V 1.0A TAP	
80	JP01	375300002401	WIRE-NS-S43MM TAP. SDA 1/	
81	JP02	375300002401	WIRE-NS-S43MM TAP. SDA 1/	
82	JP03	375300002401	WIRE-NS-S43MM TAP. SDA 1/	
83	JP04	375300002401	WIRE-NS-S43MM TAP. SDA 1/	
84	JP06	375300002401	WIRE-NS-S43MM TAP. SDA 1/	
85	JP07	375300002401	WIRE-NS-S43MM TAP. SDA 1/	
86	JP08	375300002401	WIRE-NS-S43MM TAP. SDA 1/	
87	JP09	375300002401	WIRE-NS-S43MM TAP. SDA 1/	
88	JP10	375300002401	WIRE-NS-S43MM TAP. SDA 1/	
89	JP11	375300002401	WIRE-NS-S43MM TAP. SDA 1/	
90	JP12	375300002401	WIRE-NS-S43MM TAP. SDA 1/	
91	JP13	375300002401	WIRE-NS-S43MM TAP. SDA 1/	
92	JP14	375300002401	WIRE-NS-S43MM TAP. SDA 1/	
93	JP15	375300002401	WIRE-NS-S43MM TAP. SDA 1/	
94	JP16	375300002401	WIRE-NS-S43MM TAP. SDA 1/	
95	JP18	375300002401	WIRE-NS-S43MM TAP. SDA 1/	
96	JP19	375300002401	WIRE-NS-S43MM TAP. SDA 1/	
97	JP20	375300002401	WIRE-NS-S43MM TAP. SDA 1/	

NUM.	LOCATION	PART NUMBER	DESCRIPTION	REMARK
98	JP21	375300002401	WIRE-NS-S43MM TAP. SDA 1/	
99	JP22	375300002401	WIRE-NS-S43MM TAP. SDA 1/	
100	JP23	375300002401	WIRE-NS-S43MM TAP. SDA 1/	
101	JP24	375300002401	WIRE-NS-S43MM TAP. SDA 1/	
102	JP25	375300002401	WIRE-NS-S43MM TAP. SDA 1/	
103	JP26	375300002401	WIRE-NS-S43MM TAP. SDA 1/	
104	JP27	375300002401	WIRE-NS-S43MM TAP. SDA 1/	
105	JP28	375300002401	WIRE-NS-S43MM TAP. SDA 1/	
106	JP29	375300002401	WIRE-NS-S43MM TAP. SDA 1/	
107	JP30	375300002401	WIRE-NS-S43MM TAP. SDA 1/	
108	JP31	375300002401	WIRE-NS-S43MM TAP. SDA 1/	
109	JP32	375300002401	WIRE-NS-S43MM TAP. SDA 1/	
110	JP33	375300002401	WIRE-NS-S43MM TAP. SDA 1/	
111	JP34	375300002401	WIRE-NS-S43MM TAP. SDA 1/	
112	JP35	375300002401	WIRE-NS-S43MM TAP. SDA 1/	
113	JP36	375300002401	WIRE-NS-S43MM TAP. SDA 1/	
114	JP37	375300002401	WIRE-NS-S43MM TAP. SDA 1/	
115	JP38	375300002401	WIRE-NS-S43MM TAP. SDA 1/	
116	JP39	375300002401	WIRE-NS-S43MM TAP. SDA 1/	
117	JP40	375300002401	WIRE-NS-S43MM TAP. SDA 1/	
118	JP41	375300002401	WIRE-NS-S43MM TAP. SDA 1/	
119	JP42	375300002401	WIRE-NS-S43MM TAP. SDA 1/	
120	JP43	375300002401	WIRE-NS-S43MM TAP. SDA 1/	
121	JP44	375300002401	WIRE-NS-S43MM TAP. SDA 1/	
122	JP45	375300002401	WIRE-NS-S43MM TAP. SDA 1/	
123	JP46	375300002401	WIRE-NS-S43MM TAP. SDA 1/	
124	JP47	375300002401	WIRE-NS-S43MM TAP. SDA 1/	
125	JP48	375300002401	WIRE-NS-S43MM TAP. SDA 1/	
126	JP49	375300002401	WIRE-NS-S43MM TAP. SDA 1/	
127	JP50	375300002401	WIRE-NS-S43MM TAP. SDA 1/	
128	JP51	375300002401	WIRE-NS-S43MM TAP. SDA 1/	
129	JP52	375300002401	WIRE-NS-S43MM TAP. SDA 1/	
130	JP53	375300002401	WIRE-NS-S43MM TAP. SDA 1/	
131	JP54	375300002401	WIRE-NS-S43MM TAP. SDA 1/	
132	JP55	375300002401	WIRE-NS-S43MM TAP. SDA 1/	
133	JP56	375300002401	WIRE-NS-S43MM TAP. SDA 1/	
134	JP57	375300002401	WIRE-NS-S43MM TAP. SDA 1/	
135	JP58	375300002401	WIRE-NS-S43MM TAP. SDA 1/	
136	JP59	375300002401	WIRE-NS-S43MM TAP. SDA 1/	
137	JP60	375300002401	WIRE-NS-S43MM TAP. SDA 1/	
138	JP61	375300002401	WIRE-NS-S43MM TAP. SDA 1/	
139	JP62	375300002401	WIRE-NS-S43MM TAP. SDA 1/	
140	JP63	375300002401	WIRE-NS-S43MM TAP. SDA 1/	
141	JP64	375300002401	WIRE-NS-S43MM TAP. SDA 1/	
142	JP65	375300002401	WIRE-NS-S43MM TAP. SDA 1/	
143	JP66	375300002401	WIRE-NS-S43MM TAP. SDA 1/	
144	JP67	375300002401	WIRE-NS-S43MM TAP. SDA 1/	
145	JP68	375300002401	WIRE-NS-S43MM TAP. SDA 1/	
146	JP69	375300002401	WIRE-NS-S43MM TAP. SDA 1/	
147	JP70	375300002401	WIRE-NS-S43MM TAP. SDA 1/	

NUM.	LOCATION	PART NUMBER	DESCRIPTION	REMARK
148	JP71	375300002401	WIRE-NS-S43MM TAP. SDA 1/	
149	JP72	375300002401	WIRE-NS-S43MM TAP. SDA 1/	
150	JP73	375300002401	WIRE-NS-S43MM TAP. SDA 1/	
151	JP74	375300002401	WIRE-NS-S43MM TAP. SDA 1/	
152	JP75	375300002401	WIRE-NS-S43MM TAP. SDA 1/	
153	JP76	375300002401	WIRE-NS-S43MM TAP. SDA 1/	
154	JP77	375300002401	WIRE-NS-S43MM TAP. SDA 1/	
155	JP78	375300002401	WIRE-NS-S43MM TAP. SDA 1/	
156	JP79	375300002401	WIRE-NS-S43MM TAP. SDA 1/	
157	JP80	375300002401	WIRE-NS-S43MM TAP. SDA 1/	
158	JP81	375300002401	WIRE-NS-S43MM TAP. SDA 1/	
159	JP82	375300002401	WIRE-NS-S43MM TAP. SDA 1/	
160	JP83	375300002401	WIRE-NS-S43MM TAP. SDA 1/	
161	JP84	375300002401	WIRE-NS-S43MM TAP. SDA 1/	
162	JP85	375300002401	WIRE-NS-S43MM TAP. SDA 1/	
163	JP86	375300002401	WIRE-NS-S43MM TAP. SDA 1/	
164	JP87	375300002401	WIRE-NS-S43MM TAP. SDA 1/	
165	JP88	375300002401	WIRE-NS-S43MM TAP. SDA 1/	
166	JP89	375300002401	WIRE-NS-S43MM TAP. SDA 1/	
167	JP90	375300002401	WIRE-NS-S43MM TAP. SDA 1/	
168	JP91	375300002401	WIRE-NS-S43MM TAP. SDA 1/	
169	JP92	375300002401	WIRE-NS-S43MM TAP. SDA 1/	
170	JP93	375300002401	WIRE-NS-S43MM TAP. SDA 1/	
171	LH04	E42019097250	COIL,PEAKING 22 UH AXIAL	
172	RH02	RD-8P0T0331J	RES-CF,RD 1/8W 330 OHM J	
173	RH03	RD-8P0T0331J	RES-CF,RD 1/8W 330 OHM J	
174	RH04	RN-4P0T4102F	RES-MF,RN 1/4W 41K OHM F	
175	RH05	RN-8P0T5101F	RES-MF,RN 1/8W 5.1KOHM F	
176	RH06	RN-8P0T6491F	RES-MF,RN 1/8W 6.49KOHM F	
177	RH07	RD-8P0T0125J	RES-CF,RD 1/8W 1.2M OHM J	
178	RH08	RN-8P0T3302F	RES-MF,RN 1/8W 33KOHM F	
179	RH09	2442432002	RES-MF,24.3K 0.125W F A	
180	RH10	RD-8P0T0472J	RES-CF,RD 1/8W 4.7K OHM J	
181	RH11	RN-8P0T2052F	RES-MF,RN 1/8W 20.5KOHM F	⚠
182	RH12	2442432002	RES-MF,24.3K 0.125W F A	⚠
183	RH13	2441602003	RES-MF,16K 0.125W F A	⚠
184	RH14	RD-8P0T0332J	RES-CF,RD 1/8W 3.3K OHM J	
185	RH15	RN-8P0T8201F	RES-MF,RN 1/8W 8.2KOHM F	
186	RH16	254270900101	RES-FUS,27 0.5W J M	
187	RH17	2404700007	RES-CF,470 0.5W J M	
188	RH18	RD-8P0T0752J	RES-CF,RD 1/8W 7.5K OHM J	
189	RH19	RD-8P0T0203J	RES-CF,RD 1/8W 20K OHM J	
190	RH20	RD-8P0T0123J	RES-CF,RD 1/8W 12KOHM J	
191	RH21	RD-8P0T0101J	RES-CF,RD 1/8W 100 OHM J	
192	RH22	RD-8P0T0101J	RES-CF,RD 1/8W 100 OHM J	
193	RH23	2401001010	RES-CF,1K 0.5W J M	
194	RH24	RD-8P0T0123J	RES-CF,RD 1/8W 12KOHM J	
195	RH25	RD-8P0T0562J	RES-CF,RD 1/8W 5.6K OHM J	
196	RH26	RD-8P0T0303J	RES-CF,RD 1/8W 30K OHM J	
197	RH27	RD-8P0T0274J	RES-CF,RD 1/8W 270K OHM J	

NUM.	LOCATION	PART NUMBER	DESCRIPTION	REMARK
198	RH28	RD-8P0T0362J	RES-CF,RD 1/8W 3.6K OHM J	
199	RH29	RD-8P0T0362J	RES-CF,RD 1/8W 3.6K OHM J	
200	RH30	2401801006	RES-CF,1.8K 0.5W J M	
201	RH31	RD-8P0T0104J	RES-CF,RD 1/8W 100K OHM J	
202	RH32	RD-8P0T0103J	RES-CF,RD 1/8W 10KOHM J	
203	RH33	RD-4P0T0362J	RES-CF,RD 1/4W 3.6K OHM J	
204	RH34	2446802005	RES-MF,68K 0.125W F A	
205	RH35	2401001010	RES-CF,1K 0.5W J M	
206	RH36	2441602003	RES-MF,16K 0.125W F A	
207	RH37	375300002401	WIRE-NS-S43MM TAP. SDA 1/	
208	RH38	RD-8P0T0472J	RES-CF,RD 1/8W 4.7K OHM J	
209	RH39	RD-8P0T0820J	RES-CF,RD 1/8W 82 OHM J	
210	RH40	RD-4P0T0332J	RES-CF,RD 1/4W 3.3K OHM J	
211	RH41	RD-4P0T0220J	RES-CF,RD 1/4W 22 OHM J	
212	RH42	RD-8P0T0223J	RES-CF,RD 1/8W 22K OHM J	
213	RH46	RD-8P0T0150J	RES-CF,RD 1/8W 15 OHM J	
214	RH47	RD-8P0T0473J	RES-CF,RD 1/8W 47K OHM J	
215	RH48	RD-4P0T0121J	RES-CF,RD 1/4W 120 OHM J	
216	RH50	RD-4P0T0104J	RES-CF,RD 1/4W 100K OHM J	
217	RH51	2460398001	RES-MOF,0.39 1W J M	
218	RH52	2461000007	RES-MOF,100 1W J M	
219	RH53	RD-8P0T0102J	RES-CF,RD 1/8W 1K OHM J	
220	RH55	RD-4P0T0122J	RES-CF,RD 1/4W 1.2K OHM J	
221	RH56	RD-2P0T0201J	RES-CF,RD 1/2W 200 OHM J	
222	RH57	2461501003	RES-MOF,1.5K 2W J M	
223	RH58	RD-4P0T0223J	RES-CF,RD 1/4W 22K OHM J	
224	RH59	RD-4P0T0223J	RES-CF,RD 1/4W 22K OHM J	
225	RH60	RD-4P0T0223J	RES-CF,RD 1/4W 22K OHM J	
226	RH61	RD-8P0T0223J	RES-CF,RD 1/8W 22K OHM J	
227	RH62	RD-8P0T0472J	RES-CF,RD 1/8W 4.7K OHM J	
228	RH63	RD-8P0T0223J	RES-CF,RD 1/8W 22K OHM J	
229	RH64	RD-8P0T0472J	RES-CF,RD 1/8W 4.7K OHM J	
230	RH65	RD-8P0T0223J	RES-CF,RD 1/8W 22K OHM J	
231	RH66	RD-8P0T0472J	RES-CF,RD 1/8W 4.7K OHM J	
232	RH69	RD-4P0T0434J	RES-CF,RD 1/4W 430K OHM J	
233	RH70	RD-8P0T0244J	RES-CF,RD 1/8W 240KOHM J	
234	RH71	RD-8P0T0243J	RES-CF,RD 1/8W 24K OHM J	
235	RH72	RD-8P0T0152J	RES-CF,RD 1/8W 1.5K OHM J	
236	RH73	2445842001	RES-MF,58.4K 0.125W F A	
237	RH74	RD-8P0T0103J	RES-CF,RD 1/8W 10KOHM J	
238	RH75	RD-8P0T0104J	RES-CF,RD 1/8W 100K OHM J	
239	RH76	RD-8P0T0222J	RES-CF,RD 1/8W 2.2K OHM J	
240	RH77	RD-8P0T0513J	RES-CF,RD 1/8W 51K OHM J	
241	RH78	RD-8P0T0153J	RES-CF,RD 1/8W 15K OHM J	
242	RH79	RD-8P0T0563J	RES-CF,RD 1/8W 56K OHM J	
243	RH80	RD-8P0T0682J	RES-CF,RD 1/8W 6.8K OHM J	
244	RH81	RN-8P0T1102F	RES-MF,RN 1/8W 11K OHM F	
245	RH82	2407503002	RES-CF,750K 0.25W J A	
246	RH83	RD-4P0T0364J	RES-CF,RD 1/4W 360K OHM J	
247	RH84	RD-8P0T0182J	RES-CF,RD 1/8W 1.8K OHM J	

NUM.	LOCATION	PART NUMBER	DESCRIPTION	REMARK
248	RH85	RD-8P0T0102J	RES-CF,RD 1/8W 1K OHM J	
249	RH86	2402209007	RES-CF,22 0.5W J M	
250	RH87	RD-8P0T0473J	RES-CF,RD 1/8W 47K OHM J	
251	RH88	RD-8P0T0153J	RES-CF,RD 1/8W 15K OHM J	
252	RH89	RD-8P0T0243J	RES-CF,RD 1/8W 24K OHM J	
253	RH90	RD-4P0T0101J	RES-CF,RD 1/4W 100 OHM J	
254	RH91	RD-8P0T0104J	RES-CF,RD 1/8W 100K OHM J	
255	RH92	RD-4P0T0225J	RES-CF,RD 1/4W 2.2M OHM J	
256	RH93	RD-8P0T0152J	RES-CF,RD 1/8W 1.5K OHM J	
257	RH94	RD-8P0T0823J	RES-CF,RD 1/8W 82K OHM J	
258	RH95	2461201006	RES-MOF,1.2K 2W J M	
259	RH96	RD-4P0T0471J	RES-CF,RD 1/4W 470 OHM J	
260	RH97	2402404003	RES-CF,2.4M 0.25W J A	
261	RH98	RD-8P0T0105J	RES-CF,RD 1/8W 1M OHM J	
262	RH99	2404708006	RES-CF,4.7 0.5W J M	
263	RM01	RD-8P0T0682J	RES-CF,RD 1/8W 6.8K OHM J	
264	RM02	RD-8P0T0103J	RES-CF,RD 1/8W 10KOHM J	
265	RM04	RD-8P0T0105J	RES-CF,RD 1/8W 1M OHM J	
266	RM05	RD-8P0T0101J	RES-CF,RD 1/8W 100 OHM J	
267	RM06	RD-8P0T0101J	RES-CF,RD 1/8W 100 OHM J	
268	RM07	RD-8P0T0152J	RES-CF,RD 1/8W 1.5K OHM J	
269	RM08	RD-8P0T0332J	RES-CF,RD 1/8W 3.3K OHM J	
270	RM11	RD-8P0T0153J	RES-CF,RD 1/8W 15K OHM J	
271	RM12	RD-8P0T0153J	RES-CF,RD 1/8W 15K OHM J	
272	RM13	RD-8P0T0473J	RES-CF,RD 1/8W 47K OHM J	
273	RM14	RD-8P0T0752J	RES-CF,RD 1/8W 7.5K OHM J	
274	RM16	RD-8P0T0101J	RES-CF,RD 1/8W 100 OHM J	
275	RM17	RD-8P0T0473J	RES-CF,RD 1/8W 47K OHM J	
276	RM18	RD-8P0T0472J	RES-CF,RD 1/8W 4.7K OHM J	
277	RM19	RD-8P0T0102J	RES-CF,RD 1/8W 1K OHM J	
278	RM20	RD-8P0T0153J	RES-CF,RD 1/8W 15K OHM J	
279	RM21	RD-8P0T0153J	RES-CF,RD 1/8W 15K OHM J	
280	RM22	RD-8P0T0104J	RES-CF,RD 1/8W 100K OHM J	
281	RM23	RD-8P0T0752J	RES-CF,RD 1/8W 7.5K OHM J	
282	RM24	RN-4P0T1742F	RES-MF,RN 1/4W 17.4KOHM F	
283	RM25	RD-8P0T0103J	RES-CF,RD 1/8W 10KOHM J	
284	RM26	RD-8P0T0332J	RES-CF,RD 1/8W 3.3K OHM J	
285	RM28	RD-4P0T0103J	RES-CF,RD 1/4W 10K OHM J	
286	RM29	RD-8P0T0432J	RES-CF,RD 1/8W 4.3KOHM J	
287	RM30	RD-8P0T0331J	RES-CF,RD 1/8W 330 OHM J	
288	RM31	RD-8P0T0331J	RES-CF,RD 1/8W 330 OHM J	
289	RM32	RD-4P0T0330J	RES-CF,RD 1/4W 33 OHM J	
290	RM33	RD-4P0T0302J	RES-CF,RD 1/4W 3K OHM J	
291	RM34	RD-8P0T0103J	RES-CF,RD 1/8W 10KOHM J	
292	RM36	RD-8P0T0101J	RES-CF,RD 1/8W 100 OHM J	
293	RM37	RD-8P0T0101J	RES-CF,RD 1/8W 100 OHM J	
294	RP01	2401004008	RES-CF,1M 0.5W J M	
295	RP07	2442402005	RES-MF,24K 0.125W F A	
296	RP08	RD-4P0T0220J	RES-CF,RD 1/4W 22 OHM J	
297	RP09	RD-4P0T0102J	RES-CF,RD 1/4W 1K OHM J	

NUM.	LOCATION	PART NUMBER	DESCRIPTION	REMARK
298	RP10	RD-4P0T0102J	RES-CF,RD 1/4W 1K OHM J	
299	RP12	RD-8P0T0204J	RES-CF,RD 1/8W 200K OHM J	
300	RP13	RD-8P0T0472J	RES-CF,RD 1/8W 4.7K OHM J	
301	RP14	RD-8P0T0154J	RES-CF,RD 1/8W 150K OHM J	
302	RP15	RD-4P0T0221J	RES-CF,RD 1/4W 220 OHM J	
303	RP16	2442322002	RES-MF,23.2K 0.125W F A	
304	RP17	RD-4P0T04R7J	RES-CF,RD 1/4W 4.7 OHM J	
305	RP18	2401004008	RES-CF,1M 0.5W J M	
306	RP19	RD-4P0T0473J	RES-CF,RD 1/4W 47K OHM J	
307	RP21	RD-4P0T0154J	RES-CF,RD 1/4W 150K OHM J	
308	RP22	2404702010	RES-CF,47K 0.5W J M	
309	RP23	2461000007	RES-MOF,100 1W J M	
310	RP24	RD-4P0T0102J	RES-CF,RD 1/4W 1K OHM J	
311	RP25	RD-4P0T0681J	RES-CF,RD 1/4W 680 OHM J	
312	RP26	2401000008	RES-CF,100 0.5W J M	
313	RP27	2406800008	RES-CF,680 0.5W J M	
314	RP28	2461001005	RES-MOF,1K 1W J M	
315	RP29	2463309006	RES-MOF,33 1W J M	
316	RP30	RD-8P0T0271J	RES-CF,RD 1/8W 270 OHM J	
317	RV01	2543308002	RES-FUS,3.3 1W J A	
318	RV02	RN-8P0T5601F	RES-MF,RN 1/8W 5.6KOHM F	
319	RV05	RD-4P0T01R5J	RES-CF,RD 1/4W 1.5 OHM	
320	RV07	254100800301	RES-FUS,1 1W J M	
321	RV08	RD-4P0T0332J	RES-CF,RD 1/4W 3.3K OHM J	
322	RV09	2461001005	RES-MOF,1K 1W J M	
323	RV10	RD-8P0T0622J	RES-CF,RD 1/8W 6.2K OHM J	
324	RV11	RD-8P0T0562J	RES-CF,RD 1/8W 5.6K OHM J	
325	RV18	2443402002	34KOHM 0.125 W F A	
326	RV19	RN-8P0T5601F	RES-MF,RN 1/8W 5.6KOHM F	
327	ZDH01	DTUZ-12BSB	DIODE,ZENER UZ-12BSB TAP	
328	ZDH03	DTUZ-13B	DIODE,ZENER UZ-13B	
329	ZDH04	DTUZ-13B	DIODE,ZENER UZ-13B	
330	ZDM01	DTUZ-6.2BSB	DIODE,ZENER UZ-6.2BSB T	
331	ZDM02	DTUZ-6.2BSB	DIODE,ZENER UZ-6.2BSB T	
332	ZDM03	DTUZ-5.1BSB	DIODE,ZENER UZ-5.1BSB TAP	
333	ZDM04	DTUZ-5.1BSB	DIODE,ZENER UZ-5.1BSB TAP	
334	ZDP01	DTUZ-3.3BSB	DIODE,ZENER UZ-3.3BSB	
335	ZDP02	DTUZ-4.3BSB	DIODE,ZENER UZ-4.3BSB	
336	BP03	3540200069	BD-FER,BFD3580	
337	CH01	CF93BT1J474J	CAP-MPE,63V 0.47UF J	
338	CH02	CQ92BT2A154J	CAP-PE,100V 0.15UF J	
339	CH03	CQ92BT2A822J	CAP-PE,100V 0.0082UF J	
340	CH04	CQ92BT2A104J	CAP-PE,100V 0.1UF J	
341	CH05	CQ92BT2A103J	CAP-PE,100V 0.01UF J	
342	CH06	E42007019220	CAP-PP/PE,100V 680PF J	
343	CH07	CE04BT1H010M	CAP-EL,SMS 50V 1UF M	
344	CH09	CC45CT1H101J	CAP-CD,50V 100 PF J TAP	
345	CH10	CE04BT1HR47M	CAP-EL,SMS 50V 0.47UF M	
346	CH11	CQ92BT2A332J	CAP-PE,100V 3300PF J	
347	CH12	CE04BT1H4R7M	CAP-EL,SMS 50V 4.7UF M	

NUM.	LOCATION	PART NUMBER	DESCRIPTION	REMARK
348	CH13	CQ92BT2A473J	CAP-PE,100V 0.047UF J	
349	CH14	CQ92BT2A103J	CAP-PE,100V 0.01UF J	
350	CH15	CQ92BT2A103J	CAP-PE,100V 0.01UF J	
351	CH16	CF93BT1J105J	CAP-MPE,63V 1UF J	
352	CH17	CK45BT3A331K	CAP-CE,1KV 330PF K TAP	
353	CH18	214474001702	CAP-M-P,0.47UF 250V J 7.5	
354	CH19	CE04BT1H100M	CAP-EL,SMS 50V 10UF M	
355	CH20	CQ92BT2A102J	CAP-PE,100V 0.001UF J	
356	CH21	CF93BT1J334J	CAP-MPE,63V 0.33UF J	
357	CH22	2001010122	CAP-AL,100UF 100V M 10*20	
358	CH24	2004700096	CAP-AL,47UF 35V M 6.3*11	
359	CH25	CQ92BT2A104J	CAP-PE,100V 0.1UF J	
360	CH26	CK45BT3A102K	CAP-CD,1KV 1000PF 10%	
361	CH27	2142240021	CAP-M-P,0.22UF 250V J RAD	
362	CH28	CE04BT1H010M	CAP-EL,SMS 50V 1UF M	
363	CH30	CE04IT1H010M	CAP-EL,KME 50V 1UF M	
364	CH31	2174720021	CAP-P-F,4700PF 800V J RAD	⚠
365	CH32	2142040001	CAP-MPP,0.2UF 250V J	
366	CH33	CE04BT1H010M	CAP-EL,SMS 50V 1UF M	
367	CH34	2148230001	0.082 UF 250 V J RAD	
368	CH35	CQ92BT2A333J	CAP-PE,100V 0.033UF J	
369	CH36	CQ92BT2A333J	CAP-PE,100V 0.033UF J	
370	CH37	CQ92BT2A333J	CAP-PE,100V 0.033UF J	
371	CH38	2101520006	CAP-CER,1500PF 1000V K Y5	
372	CH39	CE04BT1C470M	CAP-EL,SMS 16V 47UF M	
373	CH40	CE04BT1C100M	CAP-EL,SMS 16V 10UF M TAP	
374	CH41	CK45BT3A221K	CAP-CD,1KV 220PF K TAP	
375	CH43	CQ92BT2A473J	CAP-PE,100V 0.047UF J	
376	CH44	CE04BT1V101M	CAP-EL,SMS 35V 100UF M	
377	CH45	2101520006	CAP-CER,1500PF 1000V K Y5	
378	CH46	CE04BT1E101M	CAP-EL,SMS 25V 100UF M	
379	CH47	2002280012	CAP-AL,0.22UF 160V M 5*11	
380	CH48	CE04BT2E100M	CAP-EL,SMS 250V 10UF M	
381	CH49	CQ92BT2A102J	CAP-PE,100V 0.001UF J	
382	CH50	2001010110	CAP-AL,100UF 25V M 10*16	
383	CH51	CQ92BT2A104J	CAP-PE,100V 0.1UF J	
384	CH52	CQ92BT2A102J	CAP-PE,100V 0.001UF J	
385	CH54	CE04BT2C220M	CAP-EL,SMS 160V 22UF M	
386	CH57	CE04BT1E331M	CAP-EL,SMS 25V 330UF M	
387	CH58	2172230011	CAP-P-F,0.022UF 250V J RA	
388	CH59	CE04BT1C470M	CAP-EL,SMS 16V 47UF M	
389	CH60	CE04BT1E220M	CAP-EL,SMS 25V 22UF M	
390	CH61	CQ92BT2A104J	CAP-PE,100V 0.1UF J	
391	CH62	CQ92BT2A223J	CAP-PE,100V 0.022UF J	
392	CM01	CE04BT1H010M	CAP-EL,SMS 50V 1UF M	
393	CM02	CE04BT1HR47M	CAP-EL,SMS 50V 0.47UF M	
394	CM03	CE04BT1C101M	CAP-EL,SMS 16V 100UF M	
395	CM08	CE04BT1H0R1M	CAP-EL,SMS 50V 0.1UF M	
396	CM09	CQ92BT2A103J	CAP-PE,100V 0.01UF J	
397	CM11	E42007019220	CAP-PP/PE,100V 680PF J	

NUM.	LOCATION	PART NUMBER	DESCRIPTION	REMARK
398	CM12	CE04BT1C470M	CAP-EL,SMS 16V 47UF M	
399	CM13	CE04BT1E470M	CAP-EL,SMS 25V 47UF M	
400	CM14	CE04BT1H010M	CAP-EL,SMS 50V 1UF M	
401	CM15	CE04BT1H010M	CAP-EL,SMS 50V 1UF M	
402	CP02	E42007027050	CAP-CD,Y2 2200PF M TAP	
403	CP03	E42007027050	CAP-CD,Y2 2200PF M TAP	
404	CP08	2001010091	CAP-AL,100UF 25V M 6.3*11	
405	CP10	CQ92BT2A272J	CAP-PE,100V 0.0027UF J	
406	CP12	CK45BT3A101K	CAP-CD,1KV 100PF 10%	
407	CP15	CQ92BT2A332J	CAP-PE,100V 3300PF J	
408	CP16	CF93BT1J334J	CAP-MPE,63V 0.33UF J	
409	CP17	CQ92BT2A103J	CAP-PE,100V 0.01UF J	
410	CP18	CQ92BT2A332J	CAP-PE,100V 3300PF J	
411	CP19	2002290042	CAP-AL,2.2UF 50V M 5*11 N	
412	CP21	2002210076	CAP-AL,220UF 100V M 13*25	
413	CP23	2002200073	CAP-AL,22UF 160V M 10*20	
414	CP24	2004710059	CAP-AL,470UF 16V M 8*12 P	
415	CP25	2004710043	CAP-AL,470UF 16V M 10*12.	
416	CP26	CK45BT3A101K	CAP-CD,1KV 100PF 10%	
417	CP27	CE04BT1E681M	CAP-EL,SMS 25V 680UF M	
418	CP28	CE04BT1C470M	CAP-EL,SMS 16V 47UF M	
419	CP29	CE04BT1C470M	CAP-EL,SMS 16V 47UF M	
420	CP31	CE04BT1E471M	CAP-EL,SMS 25V 470UF M	
421	CV01	217562001401	CAP-P-F,5600PF 100V J 5.0	
422	CV02	CQ92PT2A471J	CAP-PP,100V 470PF J	
423	CV03	2004710059	CAP-AL,470UF 16V M 8*12 P	
424	CV04	2004710059	CAP-AL,470UF 16V M 8*12 P	
425	CV05	2001010093	CAP-AL,100UF 35V M 8*11.5	
426	CV06	2141040020	CAP-M-P,0.1UF 250V J RAD	
427	CV07	CQ92BT2A104J	CAP-PE,100V 0.1UF J	
428	CV08	2002200067	CAP-AL,22UF 16V M 5*11 P	
429	CV09	CQ92BT2A224J	CAP-PE,100V 0.22UF J	
430	CV10	CQ92BT2A102J	CAP-PE,100V 0.001UF J	
431	FP01	E42076013010	FUSE CLIP,TAPING	
432	LH02	3500100523	INDUCT-FIX,DR0808 8.2MH M	
433	QH01	TTKSC945CY	TR,KSC945C-Y	
434	QH02	3110100687	TR-GEN,KSA928AY LEAD	
435	QH04	TTKRC102M	TR,SWITCHING KRC102M	
436	QH05	TTKSC945CY	TR,KSC945C-Y	
437	QH06	TTKSA733CY	TR,KSA733C-Y	
438	QH08	TT2N7000	TR,2N7000	
439	QH10	3110100730	TR-GEN,KSD1616-YTA LEAD	
440	QH14	TTKSC945CY	TR,KSC945C-Y	
441	QH15	TTKSC945CY	TR,KSC945C-Y	
442	QH16	TTKSC945CY	TR,KSC945C-Y	
443	QH17	TTKSP45	TR,KSP45	
444	QH18	3110100689	TR-GEN,KSA1013Y LEAD	
445	QH19	TTKSC945CY	TR,KSC945C-Y	
446	QH20	TTKSP42	TR,KSP42	
447	QH21	TTKSA733CY	TR,KSA733C-Y	

NUM.	LOCATION	PART NUMBER	DESCRIPTION	REMARK
448	QH22	TTKSC945CY	TR,KSC945C-Y	
449	QH23	TTKRC102M	TR,SWITCHING KRC102M	
450	QH24	TTKRC102M	TR,SWITCHING KRC102M	
451	QH25	TTKSC945CY	TR,KSC945C-Y	
452	QM01	TTKSC945CY	TR,KSC945C-Y	
453	QM02	TTKSA733CY	TR,KSA733C-Y	
454	QM03	TTKTC1815Y	TR,KTC3198Y	
455	QM04	TTKSC945CY	TR,KSC945C-Y	
456	QP03	TTKRC102M	TR,SWITCHING KRC102M	
457	QP05	3110100687	TR-GEN,KSA928AY LEAD	
458	QP06	TTKRC102M	TR,SWITCHING KRC102M	
459	QP08	TTKRC102M	TR,SWITCHING KRC102M	
460	QP09	TTKTA1015Y	TR,KTA1266Y	
461	QV01	TTKSC945CY	TR,KSC945C-Y	
462	RH43	246100800701	RES-MOF,1 2W J M R-FORMIN	
463	RH44	246100800701	RES-MOF,1 2W J M R-FORMIN	
464	RH45	246180100601	RES-MOF,1.8K 2W J M R-FOR	
465	RH54	246680900201	RES-MOF,68 2W J M R-FOR	
466	RH68	246330300401	RES-MOF,330K 1W J R-FORMI	
467	RP04	246470200501	RES-MOF,47K 2W J R-FORMIN	
468	RP05	246220900601	RES-MOF,22 2W J R-FORMING	
469	RP06	246200300201	RES-MOF,200K 2W J R-FORMI	
470	RP11	246022800401	RES-MOF,0.22 2W R-FORM	
471	RV04	246100800601	RES-MOF,1 1W J R-FORMING	
472	SWP01	E42027039010	SWITCH TACT,5MM 160GF VER	
473	SW02	E42027039010	SWITCH TACT,5MM 160GF VER	
474	SW03	E42027039010	SWITCH TACT,5MM 160GF VER	
475	SW04	E42027039010	SWITCH TACT,5MM 160GF VER	
476	SW05	E42027039010	SWITCH TACT,5MM 160GF VER	
477	XM01	3530200581	VIB-QUARTZ,12MHZ 22PF ATS	
478	CON03	372010105301	CONN-M,POST 1P DEGT235 14	
479	CP5A	6130014100	EYELET,2.7PAI BRASS T=0.4	
480	CP5B	6130014100	EYELET,2.7PAI BRASS T=0.4	
481	G2	372010105301	CONN-M,POST 1P DEGT235 14	
482	ICH02	ULM358N	IC,OP-AMP LM358N	
483	ICM02	3203000819	IC-MEMO,S524C80D81-DCB0	
484	ICP01	UKA3843	IC,KA3843 DIP CONTROLLER	
485	LP3A	6130014200	EYELET,1.6PAI BRASS T=0.4	
486	LP3B	6130014200	EYELET,1.6PAI BRASS T=0.4	
487	LP3C	6130014200	EYELET,1.6PAI BRASS T=0.4	
488	LP3D	6130014200	EYELET,1.6PAI BRASS T=0.4	
489	NTC1A	6130014200	EYELET,1.6PAI BRASS T=0.4	
490	NTC1B	6130014200	EYELET,1.6PAI BRASS T=0.4	
491	QH9A	6130014200	EYELET,1.6PAI BRASS T=0.4	
492	QH9B	6130014200	EYELET,1.6PAI BRASS T=0.4	
493	QH9C	6130014200	EYELET,1.6PAI BRASS T=0.4	
494	TH2A	6130014200	EYELET,1.6PAI BRASS T=0.4	
495	TH2B	6130014200	EYELET,1.6PAI BRASS T=0.4	
496	TH4A	6130014100	EYELET,2.7PAI BRASS T=0.4	
497	TH4B	6130014100	EYELET,2.7PAI BRASS T=0.4	

NUM.	LOCATION	PART NUMBER	DESCRIPTION	REMARK
498	TH4C	6130014100	EYELET,2.7PAI BRASS T=0.4	
499	WHV01	372010105301	CONN-M,POST 1P DEGT235 14	
500	DH12	3102000221	DI-REC,FMP-2FUR(LF664) LE	
501	DH12	6120043201	CONTACT-PL,SPRING CLIP	
502	ICV01	M11143008012	SCREW,BIN(+) M3*8 MSZPC	
503	ICV01	UTDA9302H	IC,TDA9302H VER AMP	
504	ICV01	6124036601	H-SINK V,L=35 H=18.0 V560	
505	QH03	3110100665	TR-GEN,KTD2061-Y LEAD	
506	QH03	6120043201	CONTACT-PL,SPRING CLIP	
507	QH07	B4212501010A	HEAT SINK PWR,26MM NON-AN	
508	QH07	M11143008012	SCREW,BIN(+) M3*8 MSZPC	
509	QH07	3114000140	FET,YTA630 LEAD S770	
510	QH09	3110100753	TR-GEN,TT2062 LEAD	⚠
511	QH09	6120043101	CONTACT-PL,SPRING CLIP	
512	QH11	M11143008012	SCREW,BIN(+) M3*8 MSZPC	
513	QH11	3114000071	FET,2SK2134 LEAD	
514	QH11	6124020508	H-SINK POWER,B790 L=22MM	
515	QP04	3114000106	FET,2SK2545-LB104 LEAD	⚠
516	QP04	6120043201	CONTACT-PL,SPRING CLIP	
517	QP04	6124035100	H-SINK POWER ASSY,V770	
518		6120043000	SOLDER GRIP,V770	
519		6124034800	H-SINK POWER,V770	
520	TH04	6120043400	SHLD-CASE,FBT ASSY V770	
521		6120042900	SHLD-CASE FBT,V770	
522		6120043000	SOLDER GRIP,V770	
523	CH29	2145440001	CAP-M-P,0.54UF 250V J PP	
524	CON01	3720101389	CONN-M,SMW200-07P	
525	CON04	3720101916	CONN-M,SMW200-14 14	
526	CP01	2141540010	CAP-M-P,0.15UF 250V M PP	
527	CP04	2141540010	CAP-M-P,0.15UF 250V M PP	
528	CP05	2001810001	CAP-AL,180UF 400V M 25.4*	
529	FP01	E42025012060	FUSE,TIME LAG 19181 3.15A	
530	ICH01	3200001530	IC-LIN,TDA9116 32P SDIP D	
531	ICP02	ULM7805CT	IC,VOL REGULATOR,LM7805CT	
532	LP03	352020008601	FLT-LC,SEQ2828 25MH MIN	
533	PTC01	3411300012	POSISTOR,J502972D070Q270	
534	QH12	3114000124	FET,IRF630A/IRF630M	
535	QH13	3114000124	FET,IRF630A/IRF630M	
536	QP07	TTKSA614Y	TR,KSA614Y	
537	RLP01	3710100085	RELAY,DY3M-DC12V 5A 250V	
538	SWH01	E42027014010	LEVER SWITCH,30'C 3P	
539	TH01	3510300170	TRAN-SW,HDT EI1916 B790+	
540	TH03	3510300186	TRAN-SW,FOCUS EE2017 V771	
541	TP01	3510200132	TRAN-PW,EER3541 V771 WO/A	⚠
542	TP02	E4203109004A	TRANS SYNC,UU1116 TUBE	
543	AI01	372500448603	CONN-A,AC INLET ASSY V770	
544	AR01	2502001003	RES NET,2K 1/8W J SIP 6P	
545	CH08	375300002401	WIRE-NS-S43MM TAP. SDA 1/	
546	CH23	217472001801	CAP-P-F,4700PF 2KV J FOR	⚠
547	CH53	2102230017	CAP-CER,0.022UF 1KV J Z4U	

NUM.	LOCATION	PART NUMBER	DESCRIPTION	REMARK
548	CON02	3720101227	CONN-M,5045-3A 3	
549	CP07	CK45BF2H103K	CAP-CD,500V 0.01UF K	
550	CP11	210472001501	CAP-CER,Y1 4700PF M NO-CU	
551	CP20	375300002401	WIRE-NS-S43MM TAP. SDA 1/	
552	DH11	3100500094	DI-SW,ERD07-15L LEAD	
553	DP11	3100500181	DI-SW,GUR460L-5703 LEAD	
554	DP15	3100500183	DI-SW,UG4DL-5703 LEAD	
555	ICM01	3205001375	IC-U,6124-N400HD-30A DIP	
556	LED01	3330600441	LED,A1329B/GYC/R2	
557	LH01	3500101612	INDUCT-FIX,AR5*30 V770 K	
558	LH03	3500100511	INDUCT-FIX,SIZE DR1523 5P	
559	NTC01	E4207708409A	THERMISTOR 18OHM 13PAI TA	
560	RH49	2462000005	RES-MOF,200 3W J M	
561	RH67	2462000005	RES-MOF,200 3W J M	
562	TH02	3500101380	INDUCT-FIX,LIN. COIL DR14	
563	TH04	3510500092	FBT,6174Z-1038G(F771)	⚠
564	TH04	3540400027	MAG-FER,RING23.5PAI NI-ZN	
565		375850044401	CBL-SGN,PBE 1.5M MW ATTAC	
566		5004000204	SCR-TT,BIN + MC 3*8	
567		6101197401	CHASSIS MAIN ASSY,V560	
568		6101197301	CHASSIS MAIN,V560	
569		6120042600	CRT SPRING,V770	
570		6130020303	PEM,V560(H=12.0MM)	
571		6129027600	SPECIAL,T.T/W(+) 3*8 MSZP	
572		6225031404	INSULATION MCU,V570/V770	
573		6262004800	FOOTER RUBBER PEM BLACK	
574		350010183701	INDUCT-FIX,D-COIL F790D K	
575		6120043303	SHLD-CASE COVER ASSY,F790	
576		6120042700	SHLD-CASE COVER,V770	
577		6120043700	SHIELD GROUND SPRING B,V7	
578		6120045000	SHIELD SPRING C,F790D	
579		6215227800	CAP SHIELD,V770	
580		6129035200	SPECIAL SCREW TRS(+) 5X22	
581		3010100160	CRT,M41QCJ761X173(70K) 17	⚠
582		3758000200	CBL-PWR,MW WALL 1.8MT EUR	
583		6201279508	SWIVEL ASSY,F790D SPRING	
584		6155037100	COIL-SPRING SWIVEL,A720	
585		6201279200	SWIVEL BASE,V770	
586		6201279300	SWIVEL UPPER,V770	

CRT BOARD

NUM.	LOCATION	PART NUMBER	DESCRIPTION	REMARK
1		E4208619902	PCBA CRT(T1*),F771	
2		E4208519902	PCBA CRT(I1*),F771	
3		E4208919902	PCBA CRT(I3*),F771	
4		E4208419962	PCBA CRT(A6*),F771	
5		E4208419952	PCBA CRT(A5*),F771	
6		E4208419942	PCBA CRT(A4*),F771	
7		304010085102	PCB-SINGLE,V770 CRT	
8	BC02	3540200058	BD-FER,BFS3550	
9	BC03	375300002401	WIRE-NS-S43MM TAP. SDA 1/	
10	BC04	3540200058	BD-FER,BFS3550	
11	BC05	3540200059	BD-FER,BFS3580	
12	BC06	3540200059	BD-FER,BFS3580	
13	BC07	3540200058	BD-FER,BFS3550	
14	BC08	3540200058	BD-FER,BFS3550	
15	BC09	3540200058	BD-FER,BFS3550	
16	DC01	DTISS81	DIODE,SWITCHING ISS81	
17	DC02	DTISS81	DIODE,SWITCHING ISS81	
18	DC03	DTISS81	DIODE,SWITCHING ISS81	
19	DC04	DTISS81	DIODE,SWITCHING ISS81	
20	DC05	DTISS81	DIODE,SWITCHING ISS81	
21	DC06	DTISS81	DIODE,SWITCHING ISS81	
22	DC07	DTISS81	DIODE,SWITCHING ISS81	
23	DC08	DTISS81	DIODE,SWITCHING ISS81	
24	DC09	DTISS81	DIODE,SWITCHING ISS81	
25	DC10	DT1N4148	DIODE,1N4148 TAPING	
26	DC11	DT1N4148	DIODE,1N4148 TAPING	
27	DC12	DT1N4148	DIODE,1N4148 TAPING	
28	DC13	DT1N4148	DIODE,1N4148 TAPING	
29	DC14	DT1N4148	DIODE,1N4148 TAPING	
30	DC15	DT1N4148	DIODE,1N4148 TAPING	
31	DC16	DT1N4004	DIODE,400V 1.0A TAP	
32	DC17	DTUZ-8.2BSB	DIODE,ZENER UZ-8.2BSB TAP	
33	JC01	375300002401	WIRE-NS-S43MM TAP. SDA 1/	
34	JC02	375300002401	WIRE-NS-S43MM TAP. SDA 1/	
35	JC03	375300002401	WIRE-NS-S43MM TAP. SDA 1/	
36	JC04	375300002401	WIRE-NS-S43MM TAP. SDA 1/	
37	JC05	375300002401	WIRE-NS-S43MM TAP. SDA 1/	
38	JC06	375300002401	WIRE-NS-S43MM TAP. SDA 1/	
39	JC07	375300002401	WIRE-NS-S43MM TAP. SDA 1/	
40	JC08	375300002401	WIRE-NS-S43MM TAP. SDA 1/	
41	JC09	375300002401	WIRE-NS-S43MM TAP. SDA 1/	
42	JC10	375300002401	WIRE-NS-S43MM TAP. SDA 1/	
43	LC01	3500101859	INDUCT-FIX,AL04TBR56M M A	
44	LC02	3500101859	INDUCT-FIX,AL04TBR56M M A	
45	LC03	3500101859	INDUCT-FIX,AL04TBR56M M A	

NUM.	LOCATION	PART NUMBER	DESCRIPTION	REMARK
46	LC04	E42019097250	COIL,PEAKING 22 UH AXIAL	
47	RC01	RD-8P0T0223J	RES-CF,RD 1/8W 22K OHM J	
48	RC02	RD-8P0T0101J	RES-CF,RD 1/8W 100 OHM J	
49	RC03	RD-8P0T0101J	RES-CF,RD 1/8W 100 OHM J	
50	RC05	RD-8P0T0103J	RES-CF,RD 1/8W 10KOHM J	
51	RC06	RD-8P0T0102J	RES-CF,RD 1/8W 1K OHM J	
52	RC07	RD-8P0T0102J	RES-CF,RD 1/8W 1K OHM J	
53	RC08	RD-4P0T0391J	RES-CF,RD 1/4W 390 OHM J	
54	RC09	RD-4P0T0391J	RES-CF,RD 1/4W 390 OHM J	
55	RC10	RD-4P0T0391J	RES-CF,RD 1/4W 390 OHM J	
56	RC11	RD-8P0T0101J	RES-CF,RD 1/8W 100 OHM J	
57	RC12	RD-8P0T0101J	RES-CF,RD 1/8W 100 OHM J	
58	RC13	RD-8P0T0331J	RES-CF,RD 1/8W 330 OHM J	
59	RC14	RD-8P0T0331J	RES-CF,RD 1/8W 330 OHM J	
60	RC15	RD-8P0T0331J	RES-CF,RD 1/8W 330 OHM J	
61	RC16	RD-8P0T0331J	RES-CF,RD 1/8W 330 OHM J	
62	RC17	RD-8P0T0221J	RES-CF,RD 1/8W 220 OHM J	
63	RC18	RD-8P0T0102J	RES-CF,RD 1/8W 1K OHM J	
64	RC19	RD-8P0T0331J	RES-CF,RD 1/8W 330 OHM J	
65	RC20	RD-8P0T0331J	RES-CF,RD 1/8W 330 OHM J	
66	RC21	RD-8P0T0151J	RES-CF,RD 1/8W 150 OHM J	
67	RC22	RD-8P0T0105J	RES-CF,RD 1/8W 1M OHM J	
68	RC23	RD-8P0T0562J	RES-CF,RD 1/8W 5.6K OHM J	
69	RC24	RD-8P0T0622J	RES-CF,RD 1/8W 6.2K OHM J	
70	RC25	RD-8P0T0562J	RES-CF,RD 1/8W 5.6K OHM J	
71	RC26	RD-4P0T0100J	RES-CF,RD 1/4W 10 OHM J	
72	RC27	RD-4P0T0100J	RES-CF,RD 1/4W 10 OHM J	
73	RC28	RD-4P0T0100J	RES-CF,RD 1/4W 10 OHM J	
74	RC29	RD-4P0T0820J	RES-CF,RD 1/4W 82 OHM J	
75	RC30	RD-4P0T0820J	RES-CF,RD 1/4W 82 OHM J	
76	RC31	RD-4P0T0820J	RES-CF,RD 1/4W 82 OHM J	
77	RC32	2403309005	RES-CF,33 0.5W J M	
78	RC33	2403309005	RES-CF,33 0.5W J M	
79	RC34	2403309005	RES-CF,33 0.5W J M	
80	RC35	2401000008	RES-CF,100 0.5W J M	
81	RC36	2422205001	RES-CC,22M 0.5W K A	
82	RC37	RD-8P0T0824J	RES-CF,RD 1/8W 820K OHM J	
83	RC38	RD-8P0T0824J	RES-CF,RD 1/8W 820K OHM J	
84	RC39	RD-8P0T0824J	RES-CF,RD 1/8W 820K OHM J	
85	RC40	RD-8P0T0104J	RES-CF,RD 1/8W 100K OHM J	
86	RC41	RD-8P0T0104J	RES-CF,RD 1/8W 100K OHM J	
87	RC42	RD-8P0T0104J	RES-CF,RD 1/8W 100K OHM J	
88	RC43	RD-4P0T0101J	RES-CF,RD 1/4W 100 OHM J	
89	RC44	RD-4P0T0101J	RES-CF,RD 1/4W 100 OHM J	
90	RC45	RD-4P0T0101J	RES-CF,RD 1/4W 100 OHM J	
91	RC46	2542009002	RES-FUS,20 0.5W J A	
92	RC49	RD-8P0T0750J	RES-CF,RD 1/8W 75 OHM J	
93	RC50	RD-8P0T0750J	RES-CF,RD 1/8W 75 OHM J	

NUM.	LOCATION	PART NUMBER	DESCRIPTION	REMARK
94	RC51	RD-8P0T0750J	RES-CF,RD 1/8W 75 OHM J	
95	RC52	RD-8P0T0330J	RES-CF,RD 1/8W 33 OHM J	
96	RC53	RD-8P0T0330J	RES-CF,RD 1/8W 33 OHM J	
97	RC54	RD-8P0T0330J	RES-CF,RD 1/8W 33 OHM J	
98	CC01	CE04BT1C100M	CAP-EL,SMS 16V 10UF M TAP	
99	CC02	CE04BT1C100M	CAP-EL,SMS 16V 10UF M TAP	
100	CC03	CE04BT1C100M	CAP-EL,SMS 16V 10UF M TAP	
101	CC04	CE04BT1C331M	CAP-EL,SMS 16V 330UF M	
102	CC05	CG45FT1H104Z	CAP-CD,50V 0.1UF Z	
103	CC06	CG45FT1H104Z	CAP-CD,50V 0.1UF Z	
104	CC07	CG45FT1H104Z	CAP-CD,50V 0.1UF Z	
105	CC08	CG45FT1H104Z	CAP-CD,50V 0.1UF Z	
106	CC09	CG45FT1H104Z	CAP-CD,50V 0.1UF Z	
107	CC10	CG45FT1H104Z	CAP-CD,50V 0.1UF Z	
108	CC11	2171020016	CAP-P-F,1000PF 100V J RAD	
109	CC12	CE04BT1HR47M	CAP-EL,SMS 50V 0.47UF M	
110	CC13	CE04BT1C221M	CAP-EL,SMS 16V 220UF M	
111	CC14	CG45FT1H104Z	CAP-CD,50V 0.1UF Z	
112	CC15	CE04BT1C101M	CAP-EL,SMS 16V 100UF M	
113	CC16	CE04BT1C101M	CAP-EL,SMS 16V 100UF M	
114	CC17	CG45FT1H104Z	CAP-CD,50V 0.1UF Z	
115	CC18	CQ92BT2A103J	CAP-PE,100V 0.01UF J	
116	CC19	CQ92BT2A103J	CAP-PE,100V 0.01UF J	
117	CC20	CE04BT1C221M	CAP-EL,SMS 16V 220UF M	
118	CC21	CG45FT1H104Z	CAP-CD,50V 0.1UF Z	
119	CC22	CE04BT2A101M	CAP-EL,SMS 100V 100UF M	
120	CC23	CQ92BT2A104J	CAP-PE,100V 0.1UF J	
121	CC24	2001090053	CAP-AL,1UF 100V M 5*11 NP	
122	CC25	2001090053	CAP-AL,1UF 100V M 5*11 NP	
123	CC26	2001090053	CAP-AL,1UF 100V M 5*11 NP	
124	CC27	2002280012	CAP-AL,0.22UF 160V M 5*11	
125	CC28	2002280012	CAP-AL,0.22UF 160V M 5*11	
126	CC29	2002280012	CAP-AL,0.22UF 160V M 5*11	
127	CC30	CE04BT1C101M	CAP-EL,SMS 16V 100UF M	
128	CC31	CE04BT1C470M	CAP-EL,SMS 16V 47UF M	
129	CC32	CK45BT2H102K	CAP-CD,500V 1000PF K	
130	CC34	CE04BT2C100M	CAP-EL,SMS 160V 10UF M	
131	CC35	CQ92BT2A562J	CAP-PE,100V 0.0056UF J	
132	CC36	CG45FT1H104Z	CAP-CD,50V 0.1UF Z	
133	CC37	CQ92BT2A562J	CAP-PE,100V 0.0056UF J	
134	CC38	CE04BT1C101M	CAP-EL,SMS 16V 100UF M	
135	CC39	CQ92BT2A104J	CAP-PE,100V 0.1UF J	
136	FC01	E42029026410	FILTER,EMI 50V 0.1UF M	
137	LC05	E42029012020	NOISE FILTER,TH28123MA	
138	QC01	3110100737	TR-GEN,KTA1266GR LEAD	
139	QC02	3110100737	TR-GEN,KTA1266GR LEAD	
140	QC03	TTKSP92	TR,KSP92	
141	QC04	TTKSP42	TR,KSP42	

NUM.	LOCATION	PART NUMBER	DESCRIPTION	REMARK
142	QC05	TTKSP92	TR,KSP92	
143	QC06	TTKSP42	TR,KSP42	
144	QC07	TTKSP92	TR,KSP92	
145	QC08	TTKSP42	TR,KSP42	
146	RC55	246180800301	RES-MOF,1.8 1W J R-FORMIN	
147	SGC01	3411100083	VARISTOR,SURGE ABSORBER R	
148	SGC02	3411100083	VARISTOR,SURGE ABSORBER R	
149	SGC03	3411100083	VARISTOR,SURGE ABSORBER R	
150	SGC04	3411100084	VARISTOR,SURGE ABSORBER R	
151	SGC05	3411100043	VARISTOR,S23 1500V 1500V	
152	CGND	372010105301	CONN-M,POST 1P DEGT235 14	
153	ICC02	3204000577	IC-INT,MTV021 9LANGUAGE D	
154	ICC03	M11143006012	SCREW,BIN(+) M3*6 MSZPC	
155	ICC03	3200001415	IC-LIN,LM2437T	
156	ICC03	6124035201	H-SINK VIDEO ASSY,V770	
157		6120043000	SOLDER GRIP,V770	
158		6124034901	H-SINK VIDEO,V770	
159	CC33	2102230017	CAP-CER,0.022UF 1KV J Z4U	
160	CNC01	3725004907	CONN-A,14P FLAT 200MM V77	
161	CNC02	3720101388	CONN-M,SMW200-06P	
162	G2	375500076901	WIRE-ASS'Y,G2 300MM 7687B	
163	ICC01	3200001232	IC-LIN,S1D2500A01-D0B0	
164	SK01	372110057702	CONN-F,ISDS04S-P DBL FOCU	
165		6120044600	SHLD-PL,FENCE CRT ASSY	
166		6120042500	SHLD-CASE FENCE CRT,V770	
167		6120044300	GND-PL,VIDEO SPRING G910	
168		M11183008012	SCREW,M/WAS(+) 3*8 MSZPC	
169		375400001602	WIRE-NS-M,1.0T<-TBC->1.0T	

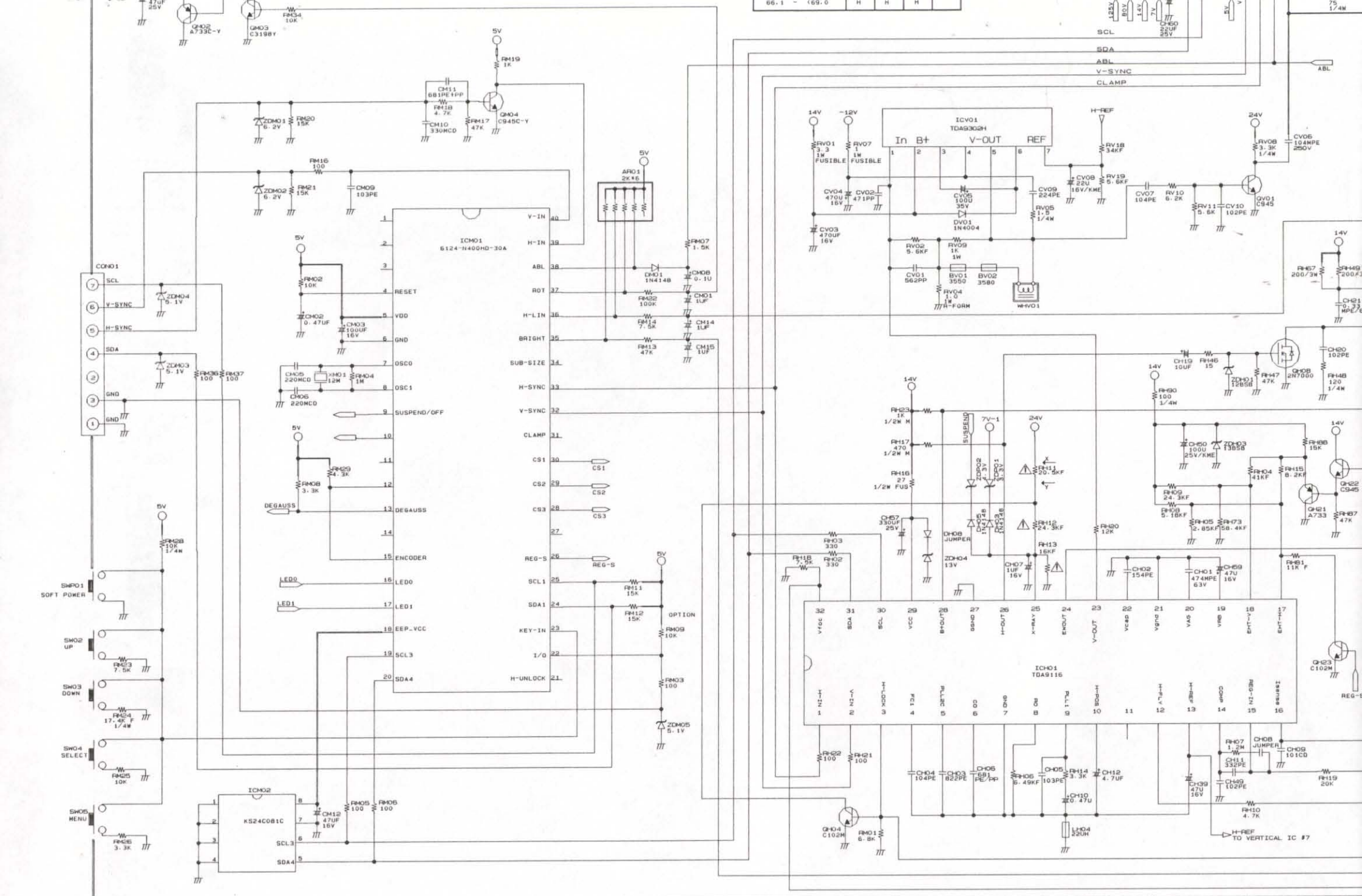

WARNING: THIS EQUIPMENT CONTAINS SAFETY & CORM CRITICAL COMPONENTS
ALL PARTS SHOWN IN THE ⚠ MARKS OF THE SCHEMATIC ARE SAFETY
REPLACE SAFETY CHITICAL COMPONENTS ONLY WITH MANUFACTURERS
RECOMMENED PARTS LIST FOR EXACT REPLACEMENTS.

NOTE:
1. RESISTANCE IS SHOWN IN OHM K=1,000
   SCHEMATIC DIAGRAM IS 1/8W R-CARBON.
2. CAPACITANCE IS SHOWN pF AND NOTED O
   VOLTAGE OF CONDENCER NOT NOTED IN S
3. ABBREVIATION AND SYMBOL
   P: POLYESTER PP: POLYPROP
4. THIS SCHEMATIC DIAGRAM IS SUBJECTED
   IMPROVEMENT.

MODEL : F770D
TYPE NO : C17F05071
CHASSIS NO:C-1723

PCB REV : 02

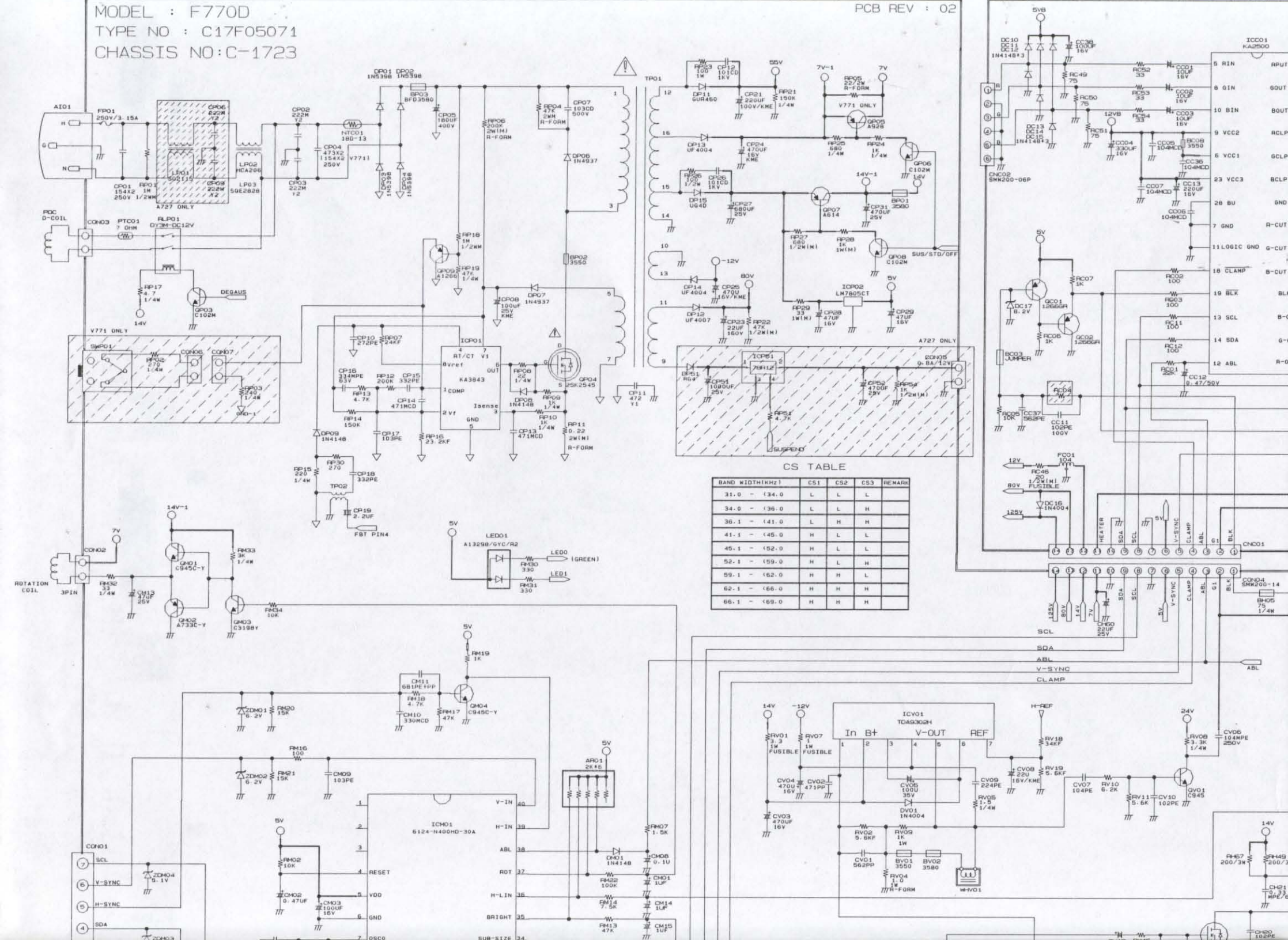

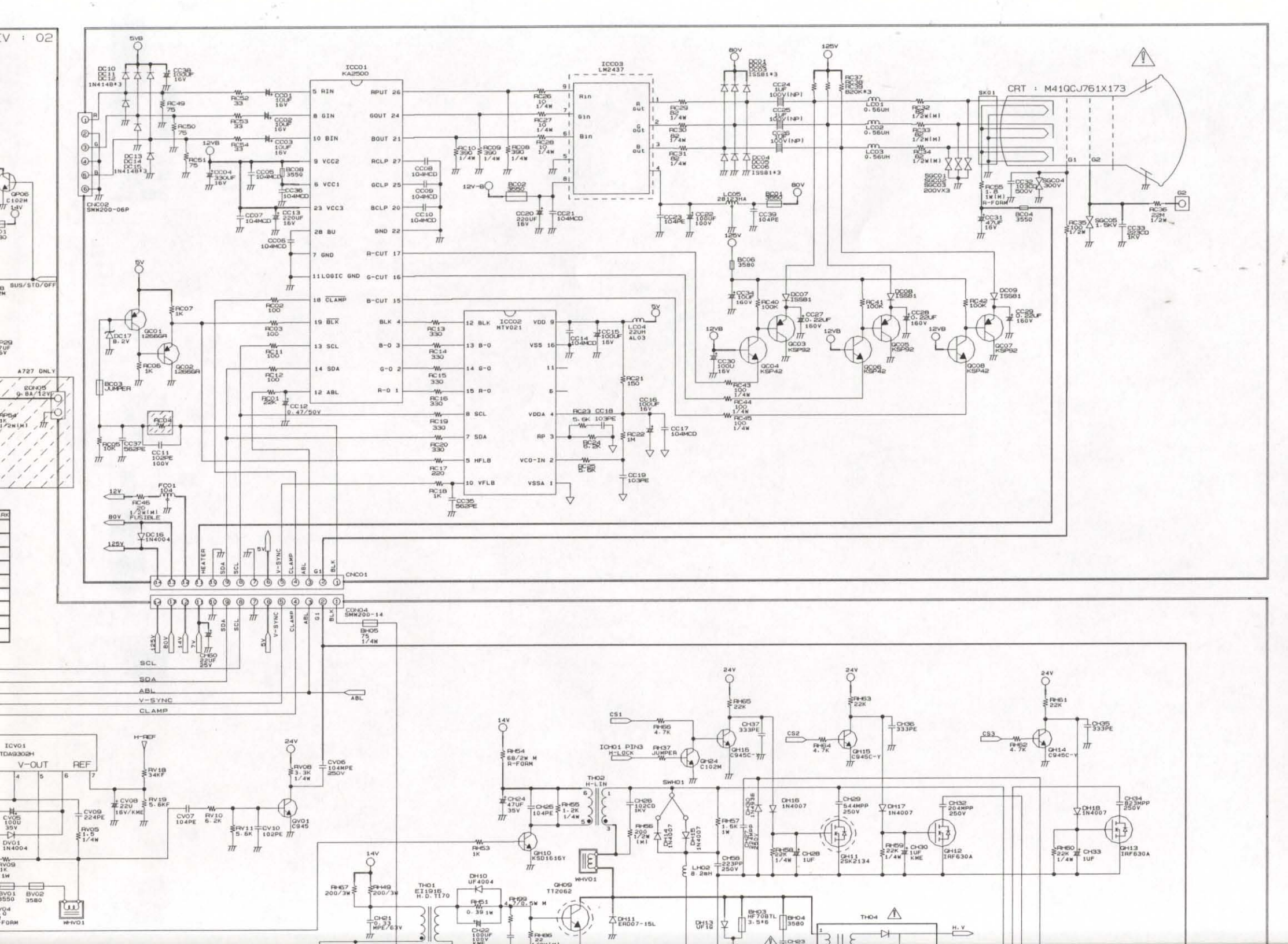

CRT : M41QCJ761X173
ICC01 KA2500
ICC03 LM2437
ICC02 MTV021
CNC02 SMW200-06P
CNC01
CON04 SMW200-14
ICV01 TDA9302H
V-OUT
REF
SCL
SDA
ABL
V-SYNC
CLAMP
HEATER
BUS/STD/OFF
A727 ONLY
ICH01 PIN3 H-LOCK
TH01 EI1916 H.D.T170
TH02 H-LIN
TH04
SWH01
WHV01
QH09 TT2062
QH10 KSD1616Y
QH11 2SK2134
QH12 IRF630A
QH13 IRF630A
QH14 C945C-Y
QH15 C945C-Y
QH16 C945C-Y
QH24 C102M
QV01 C945

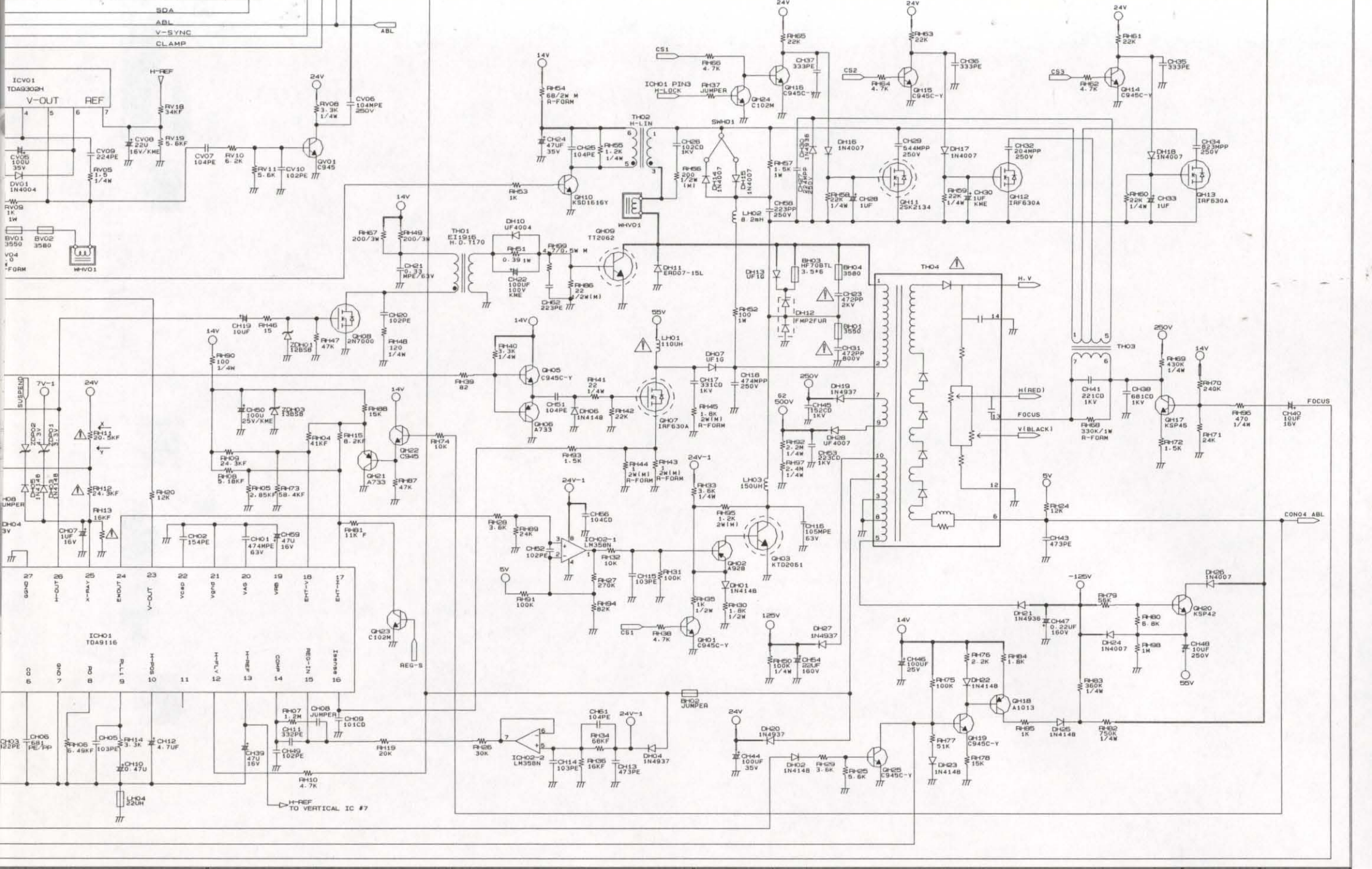

FETY & CORH CRITICAL COMPONENTS
THE SCHEMATIC ARE SAFETY
ONLY WITH MANUFACTURERS
LACEMENTS.

NOTE:
1. RESISTANCE IS SHOWN IN OHM K=1,000 M=1,000,000 RATED POWER OF RESISTOR NOT NOTED IN SCHEMATIC DIAGRAM IS 1/8W R-CARBON.
2. CAPACITANCE IS SHOWN pF AND NOTED CAPACITANCES IS SHOWN uF. uF=1,000,000pF RATED VOLTAGE OF CONDENCER NOT NOTED IN SCHEMATIC DIAGRAM IS 50V.
3. ABBREVIATION AND SYMBOL
   P: POLYESTER PP: POLYPROPYLENE
4. THIS SCHEMATIC DIAGRAM IS SUBJECTED TO CHANGE WITHOUT NOTICE FOR FURTHER IMPROVEMENT.

DWG. REV.	A	DESCRIPTION		DOC. NO.	DATE	APPROVAL
DWG. NO.		SIGNATURE		DATE	INSP	SHEET NO.
TITLE	F770D	DWN	D. Y. KIM	2001.09.05		1/1
		CHK	B. H. KIM	2001.09.05		
ImageQuest		APP	Y. K BYUN	2001.09.05		

Wave Form

[1024X768@85Hz,Full White pattern]

1.CP05 "+"

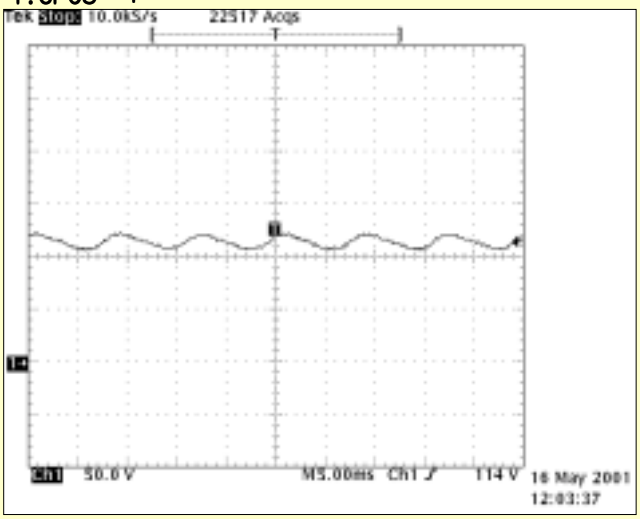

2.ICP01 PIN8

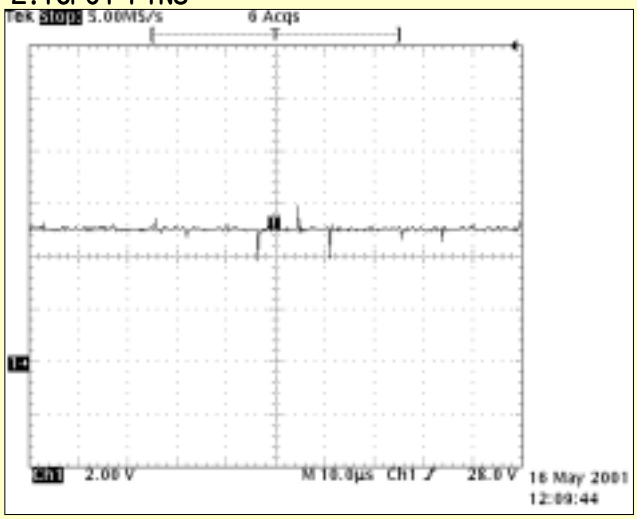

3.ICP01 PIN4

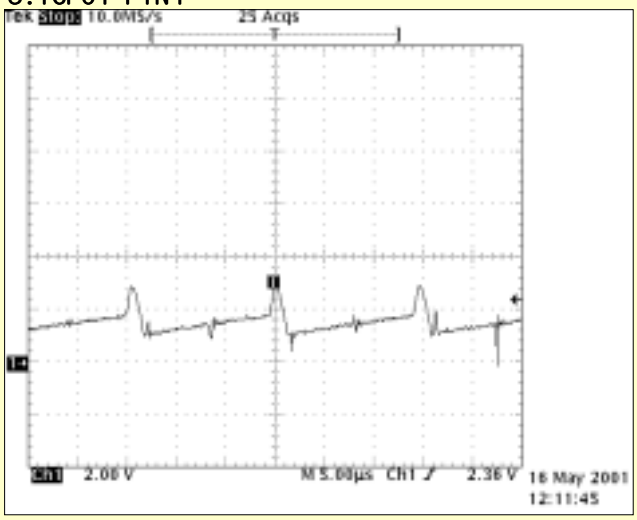

4.ICP01 PIN6

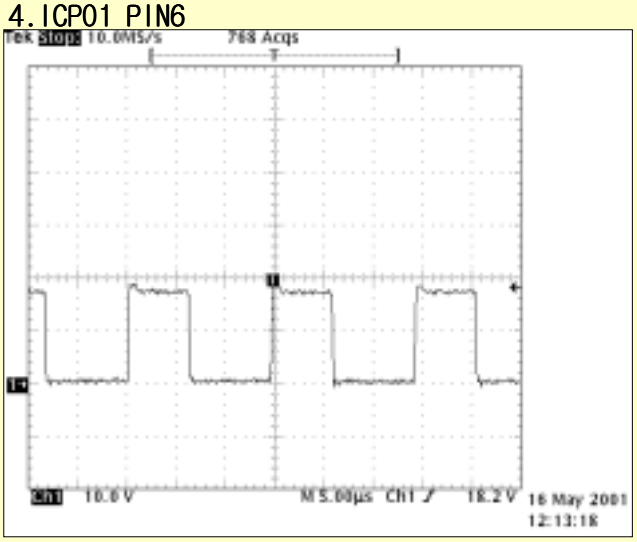

5.QP04 Drain

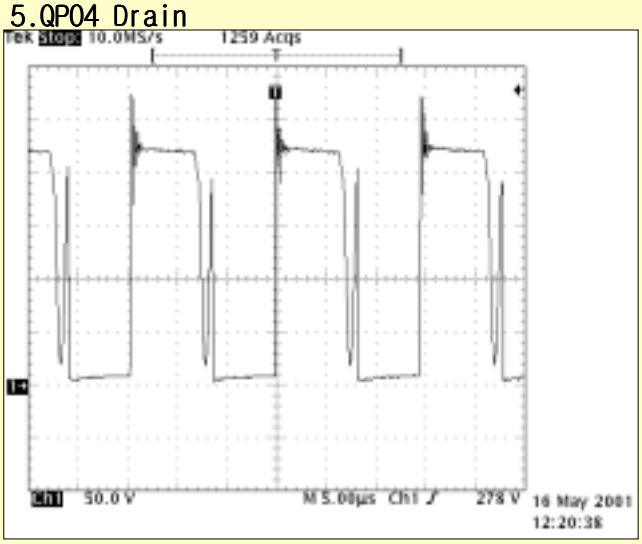

6.DP09 Anode

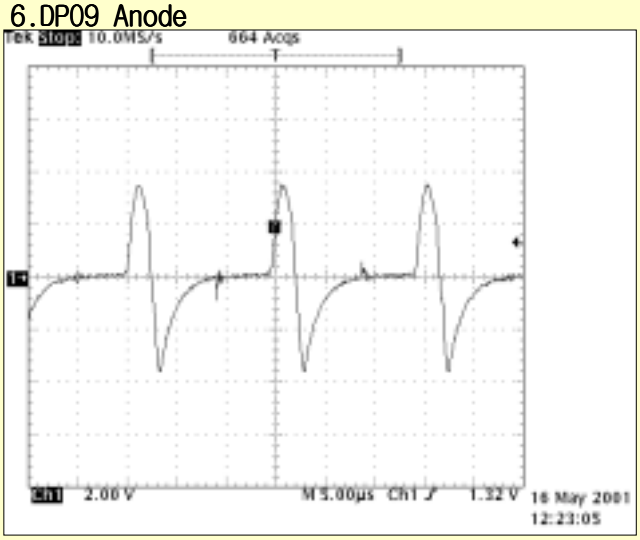

7.TP01 PIN12

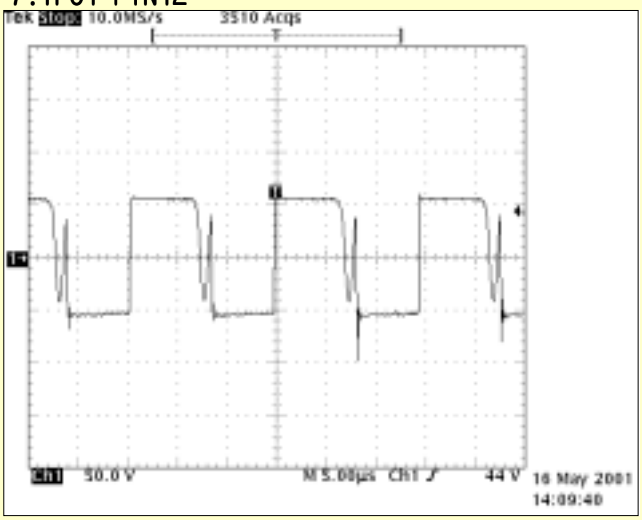

8.ICM01 PIN8

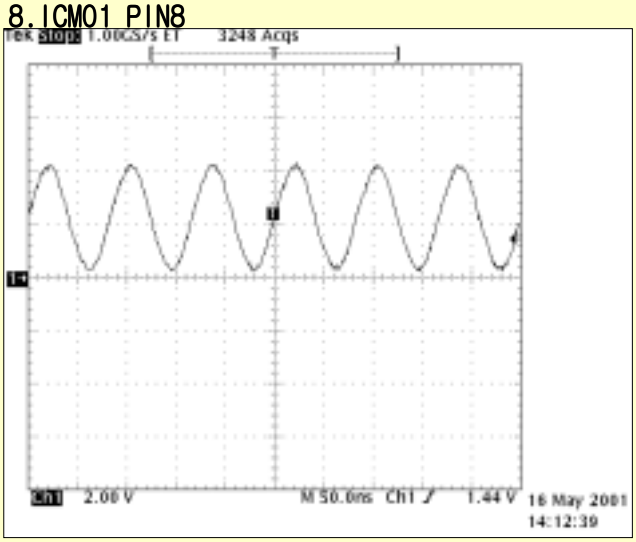

9.ICM01 PIN19 (SCL)

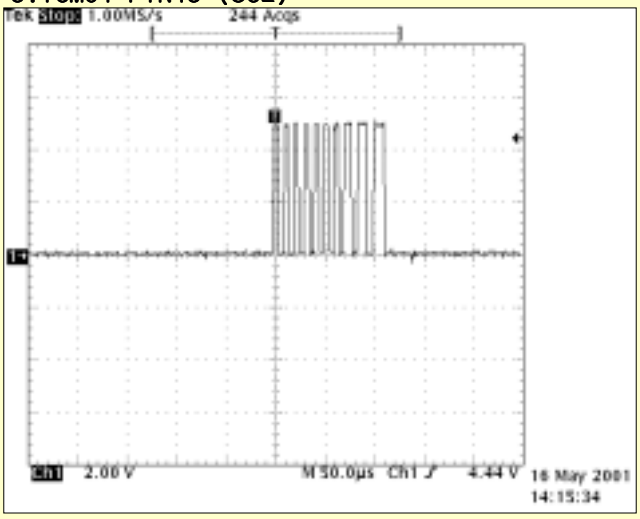

10.ICM01 PIN20 (SDA)

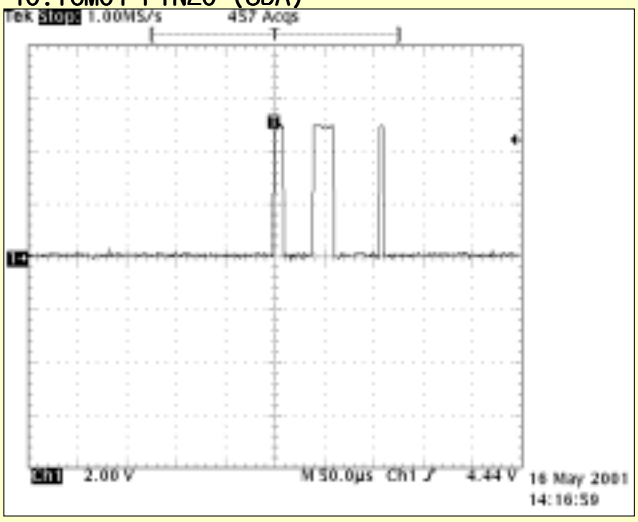

11.ICH01 PIN01

12.ICH01 PIN22

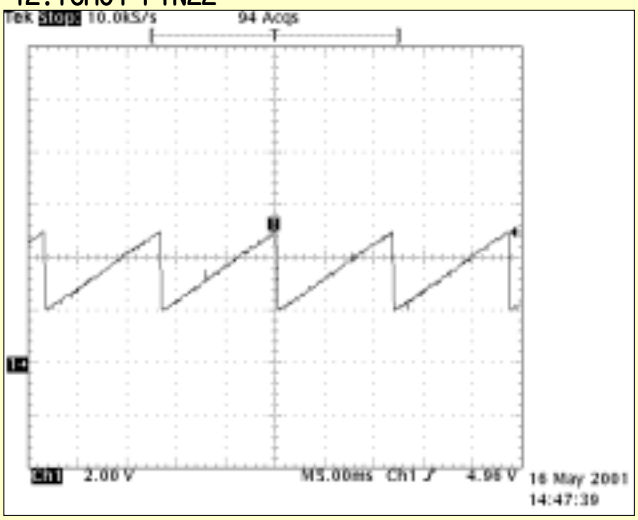

13.ICH01 PIN24

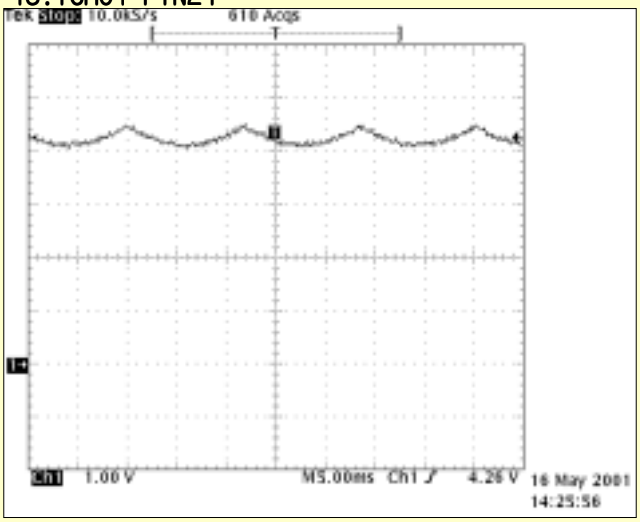

14.ICH01 PIN26

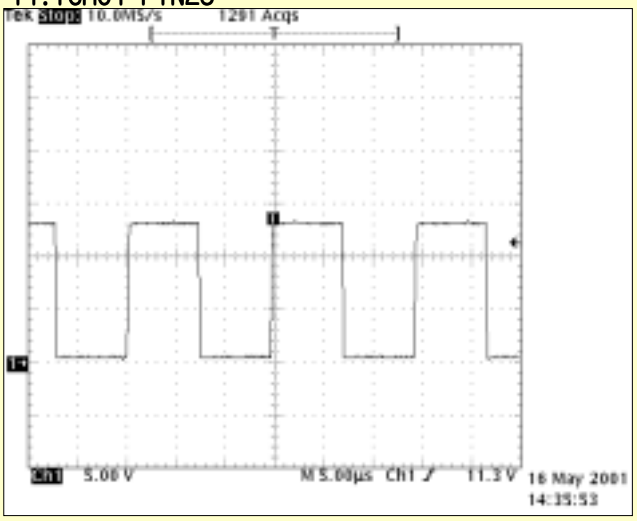

15.ICH01 PIN28

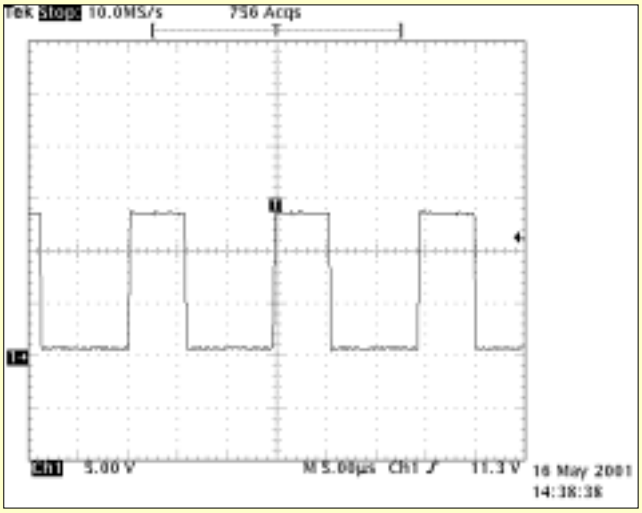

16.ICH01 PIN32

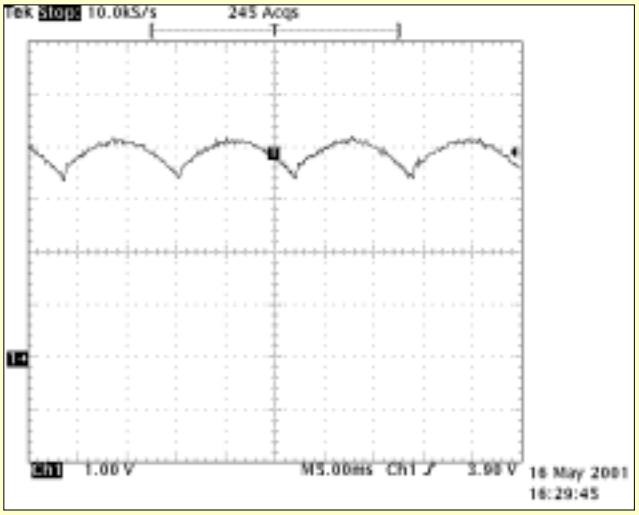

17.WHV01 PIN3

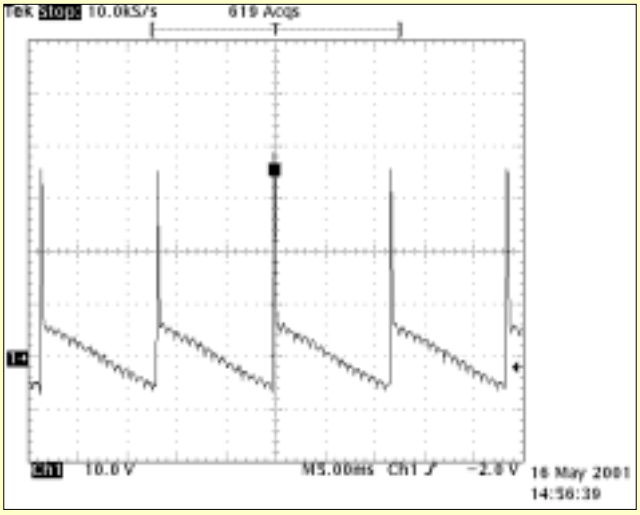

18.WHV01 PIN4

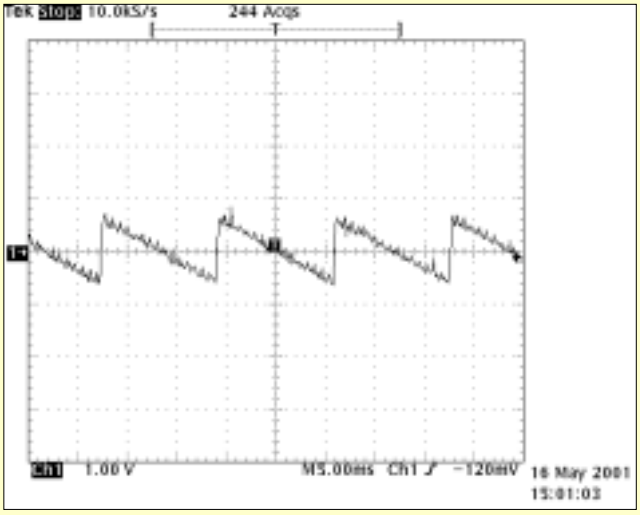

19.QH08 Drain

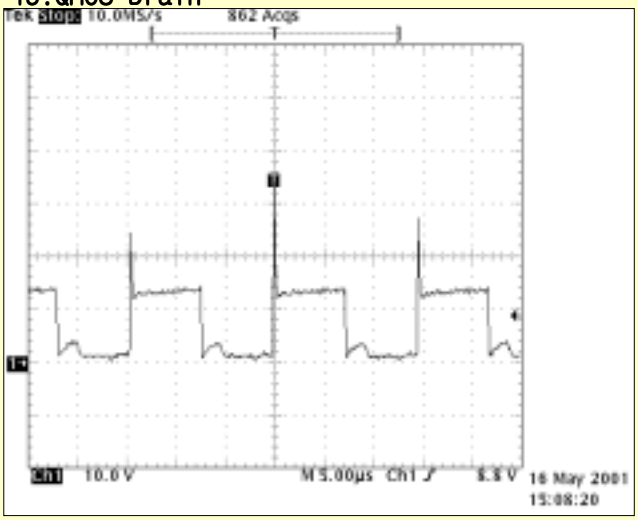

20.QH09 Base

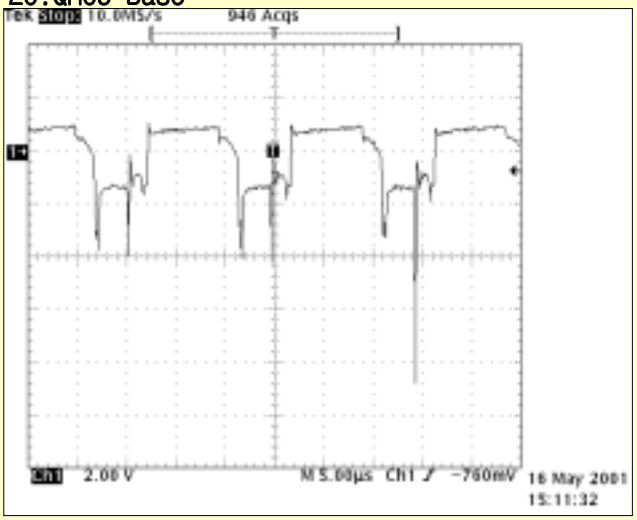

21.QH09 Collector

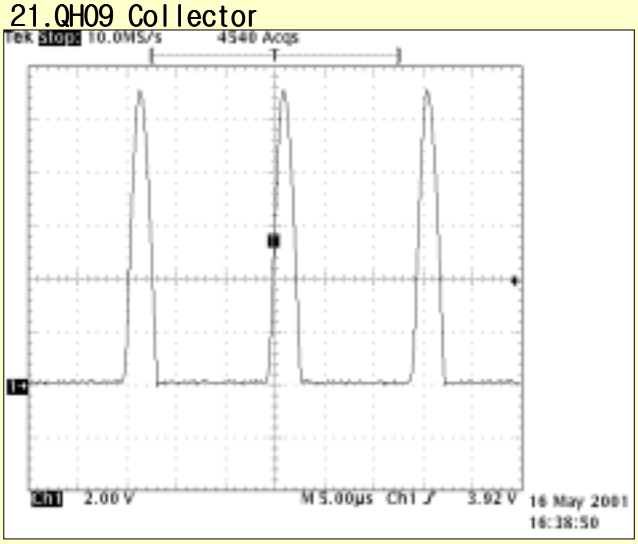

22.DH12 PIN2

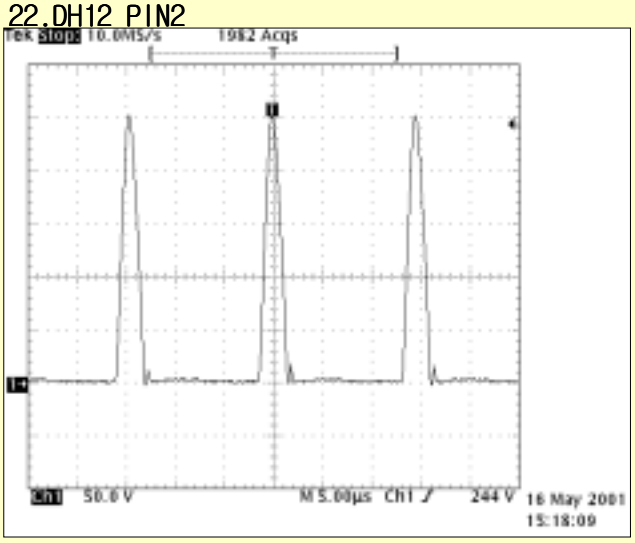

23.TH02 PIN1

24.QH11 Drain

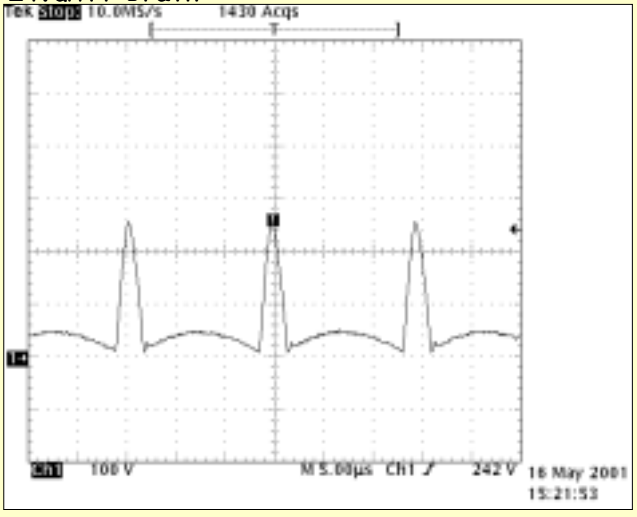

25.QH07 Gate

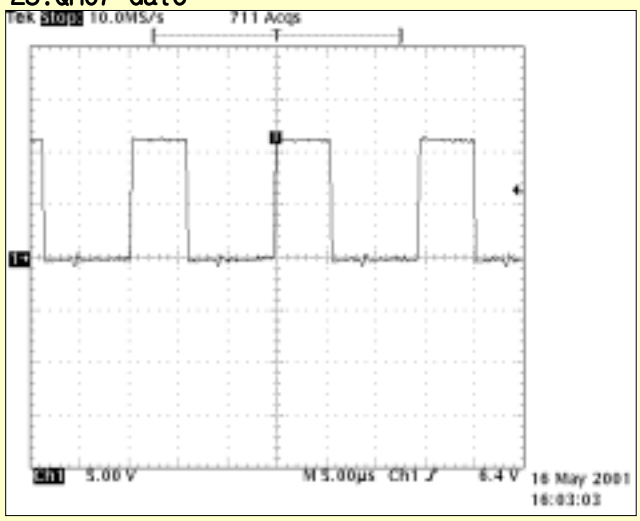

26.QH07 Drain

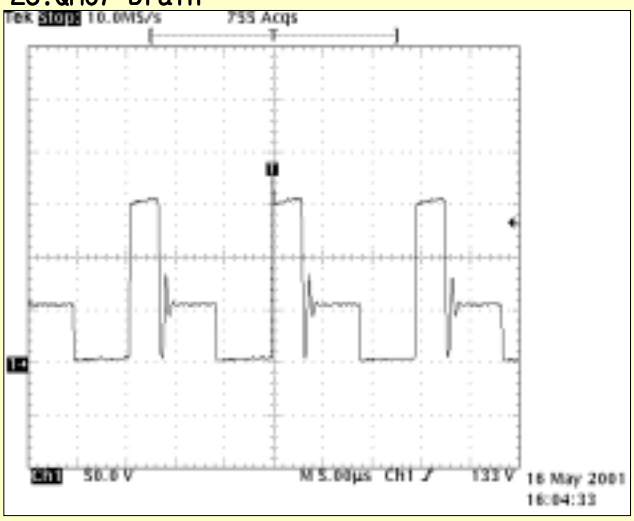

27.ICH02 PIN1

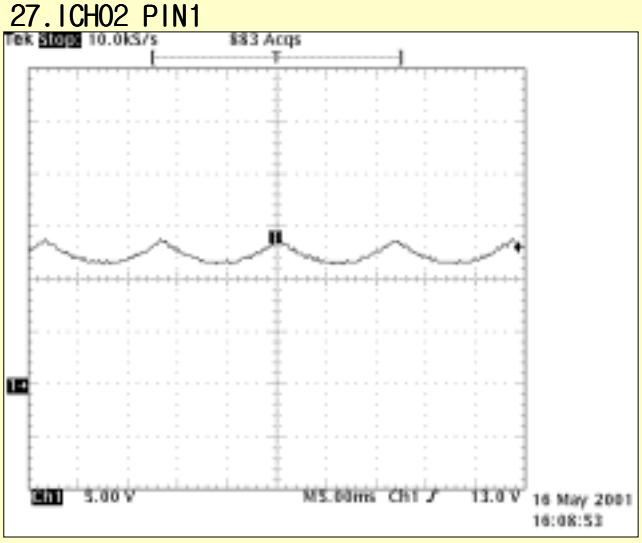

28.QH03 Collector

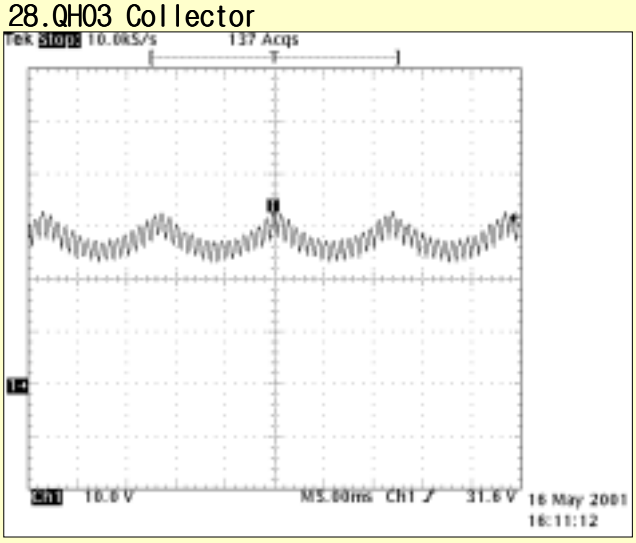

29.ICH01 PIN32

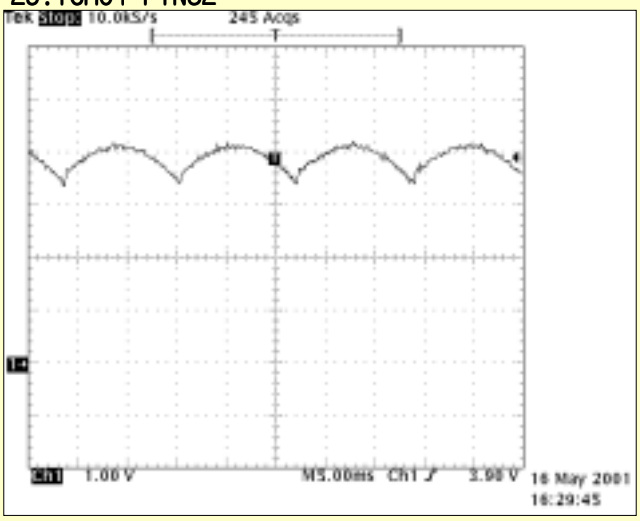

30.TH04 PIN12

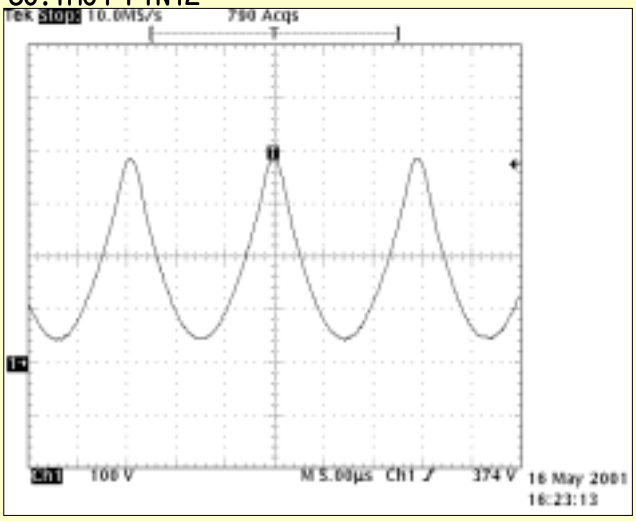

31.ICC01 PIN5,8,10

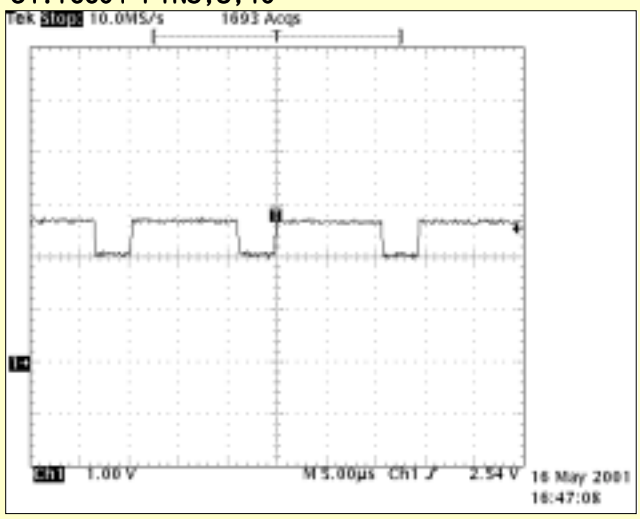

32.ICC01 PIN21,24,26

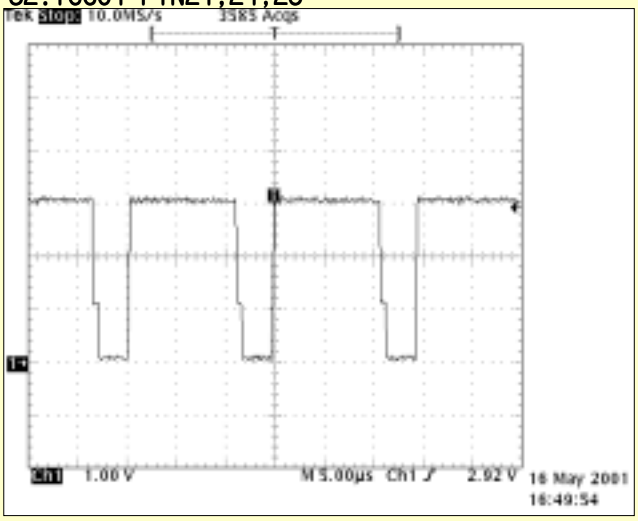

33.ICC03 PIN1,2,3

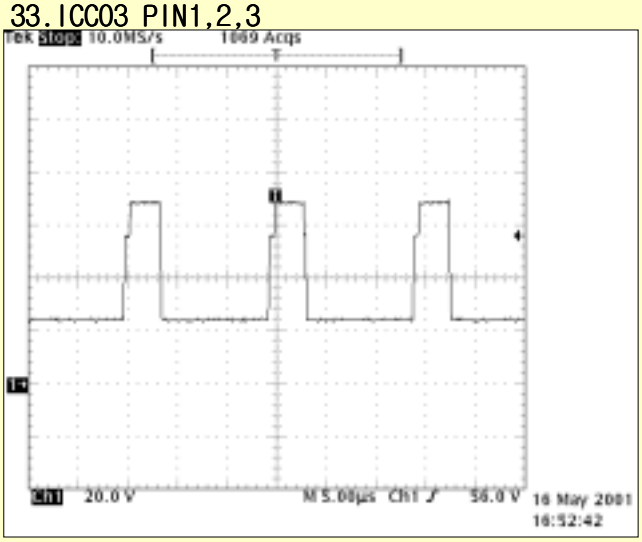

34.ICC01 PIN18

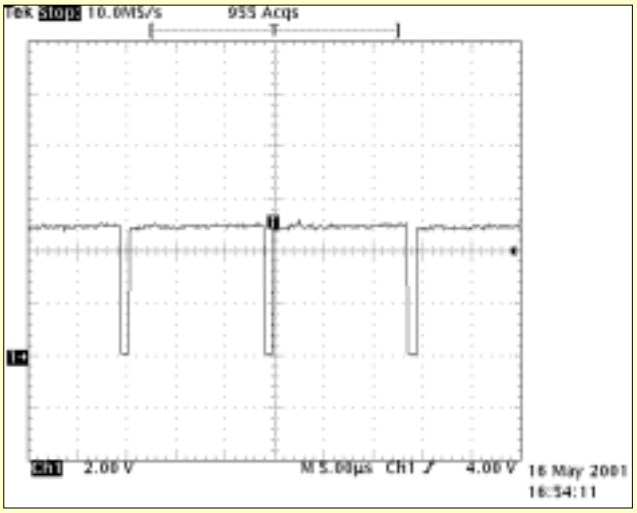

35.ICC01 PIN19

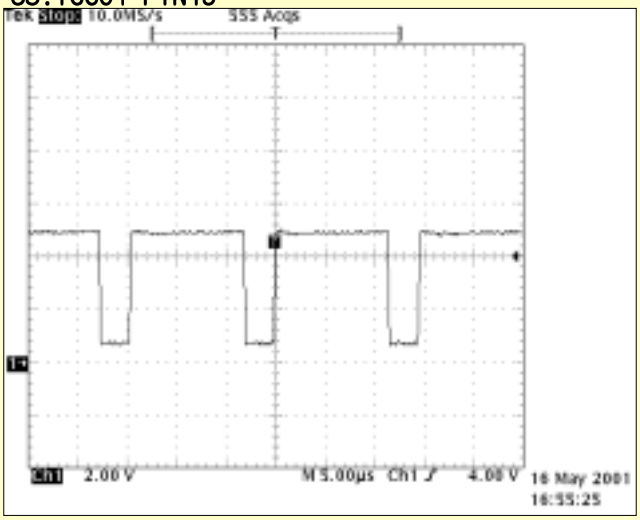

36.SK01 G1

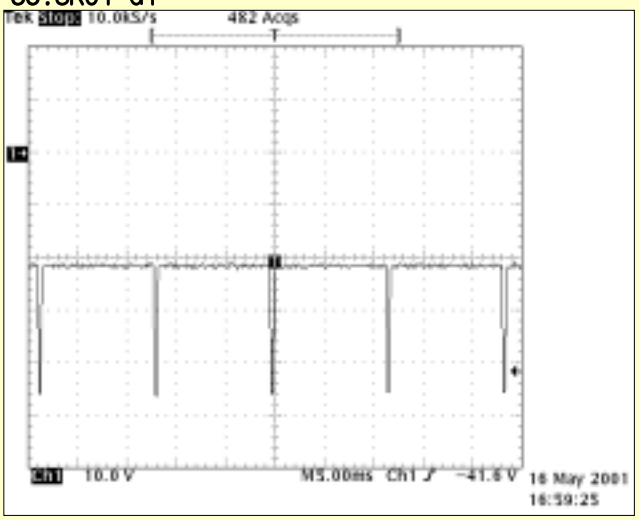

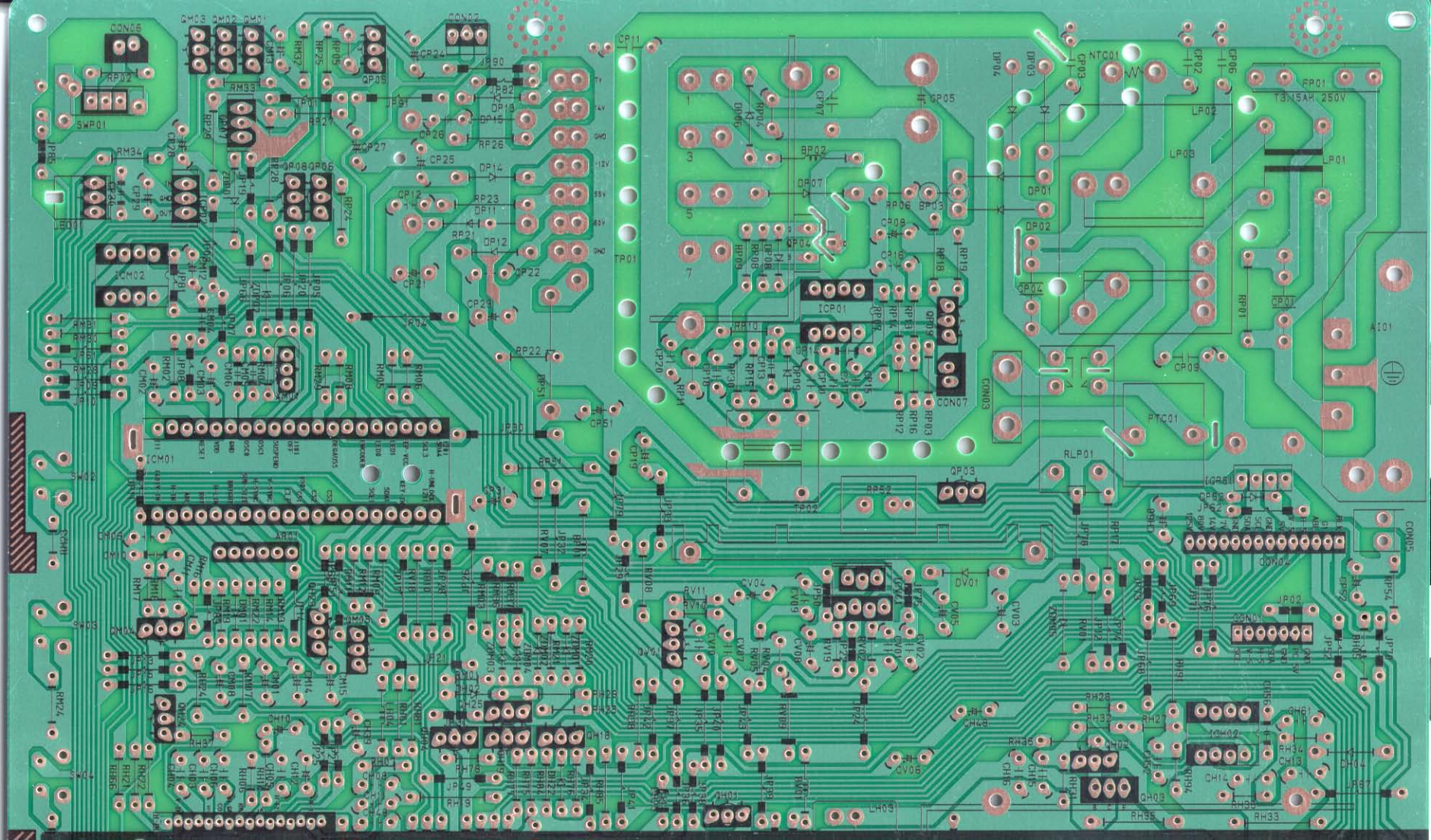

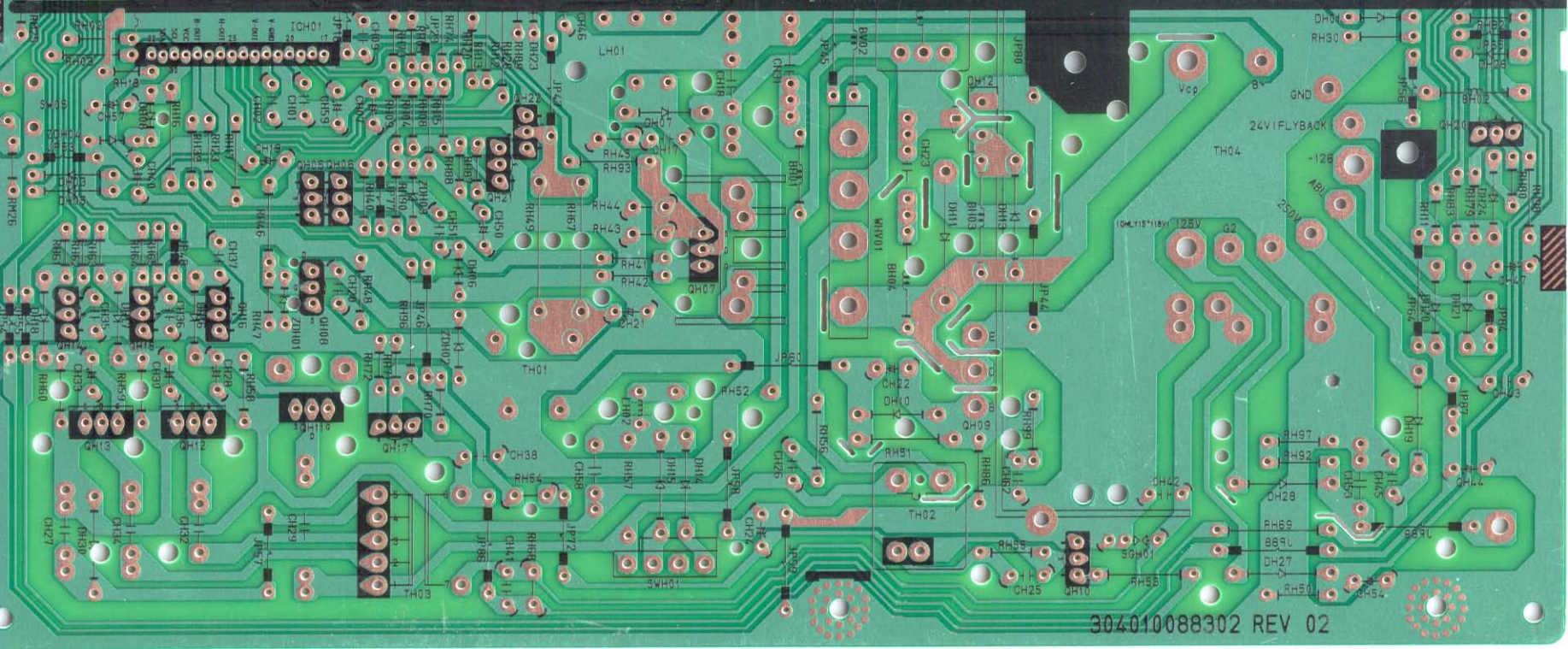
304010088302 REV 02

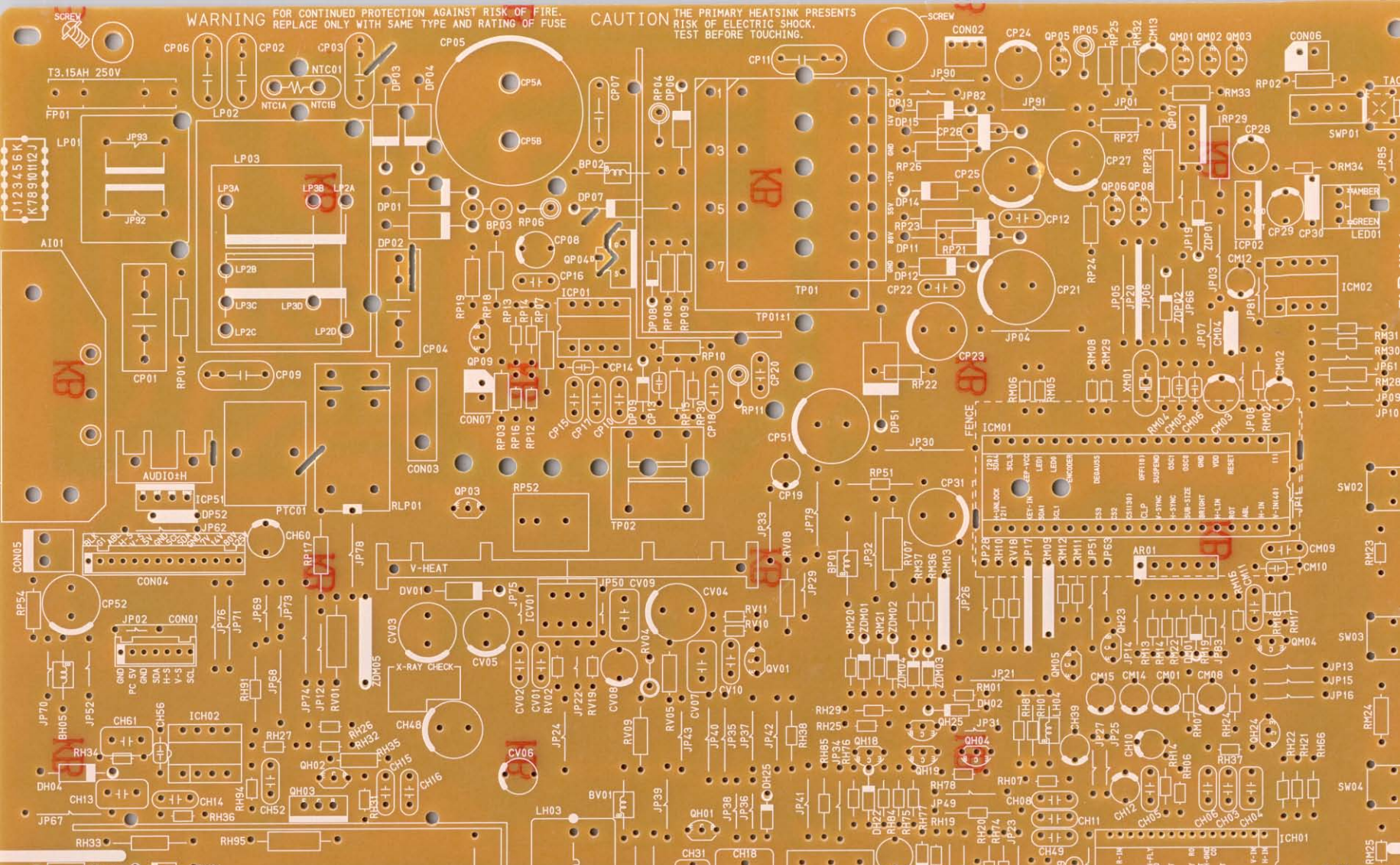
WARNING FOR CONTINUED PROTECTION AGAINST RISK OF FIRE. REPLACE ONLY WITH SAME TYPE AND RATING OF FUSE
CAUTION THE PRIMARY HEATSINK PRESENTS RISK OF ELECTRIC SHOCK. TEST BEFORE TOUCHING.
T3.15AH 250V
SCREW
FENCE
V-HEAT
X-RAY CHECK
AUDIO±H
AMBER
GREEN

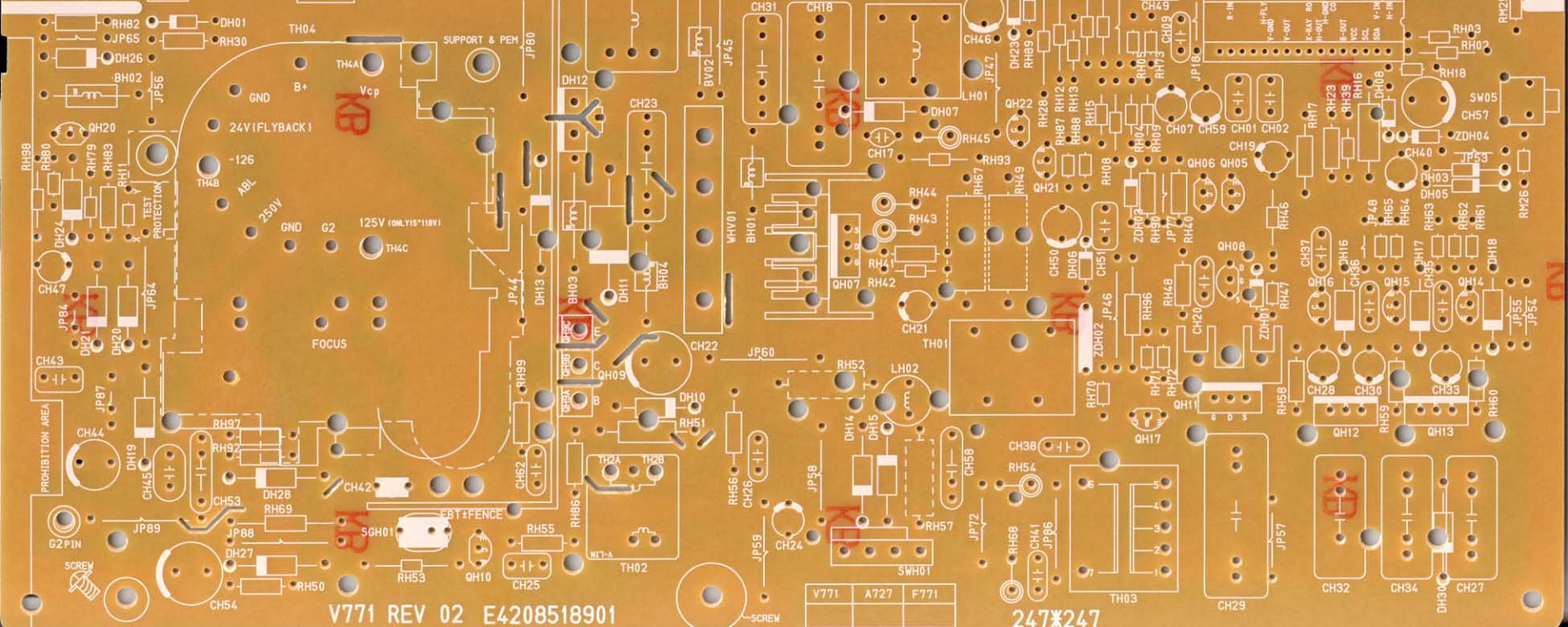

V771 REV 02 E4208518901
247*247
V771
A727
F771
SUPPORT & PEM
24V(FLYBACK)
125V (ONLY15*118V)
FOCUS
PROHIBITION AREA
G2PIN
SCREW
TH01
TH02
TH03
TH04
TH04A
TH4B
TH4C
SGH01
SWH01
LH01
LH02

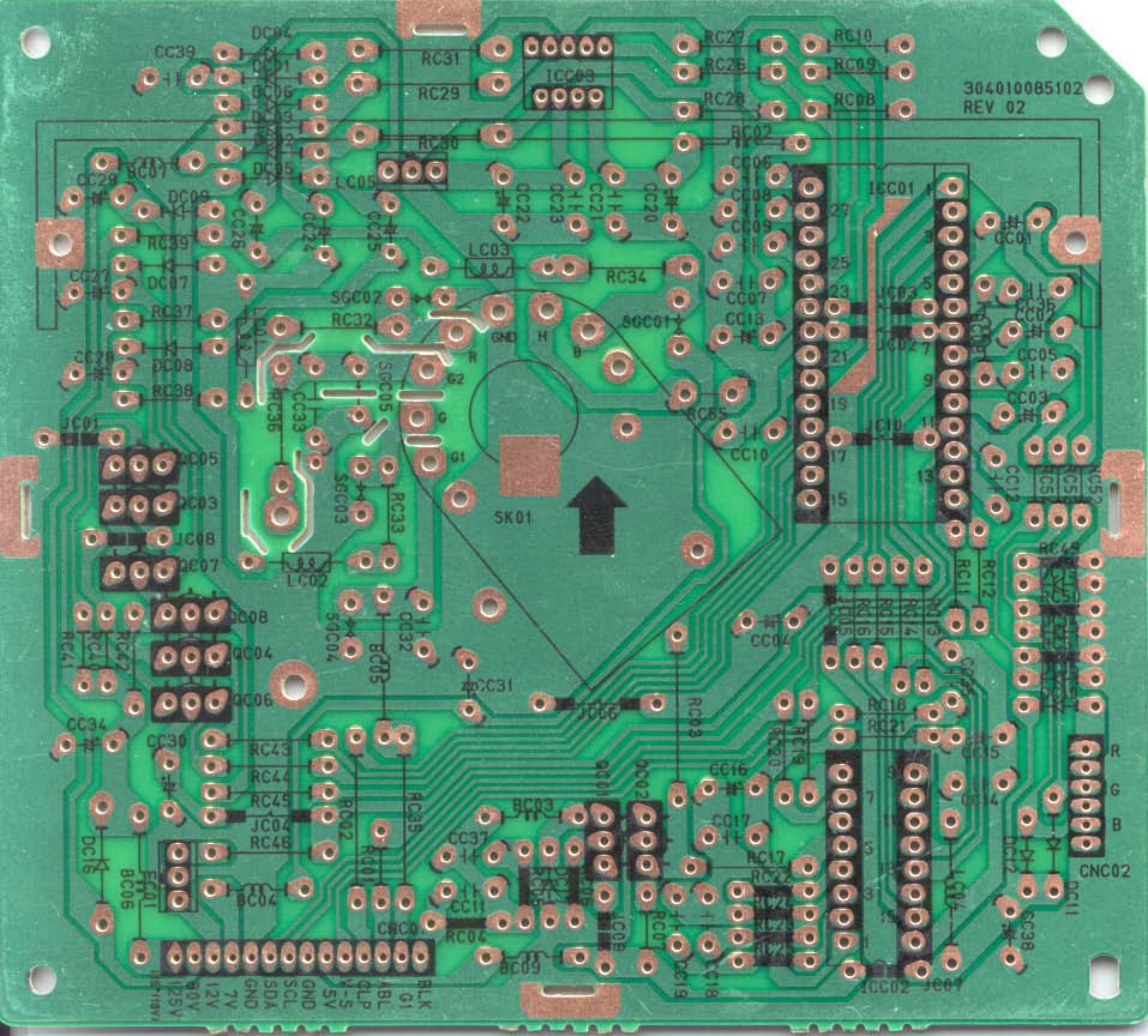
304010085102
REV 02
ICC03
ICC01
ICC02
SK01
CNC01
CNC02
SGC01
SGC02
SGC03
SGC04
SGC05
LC01
LC02
LC03
LC05
JC01
JC02
JC03
JC04
JC05
JC06
JC07
JC08
JC10
QC01
QC02
QC03
QC04
QC05
QC06
QC07
QC08
GND
H
B
R
G
G2
G1
R
G
B
125V
80V
12V
7V
GND
SDA
SCL
GND
5V
V-S
CLP
ABL
G1
BLK

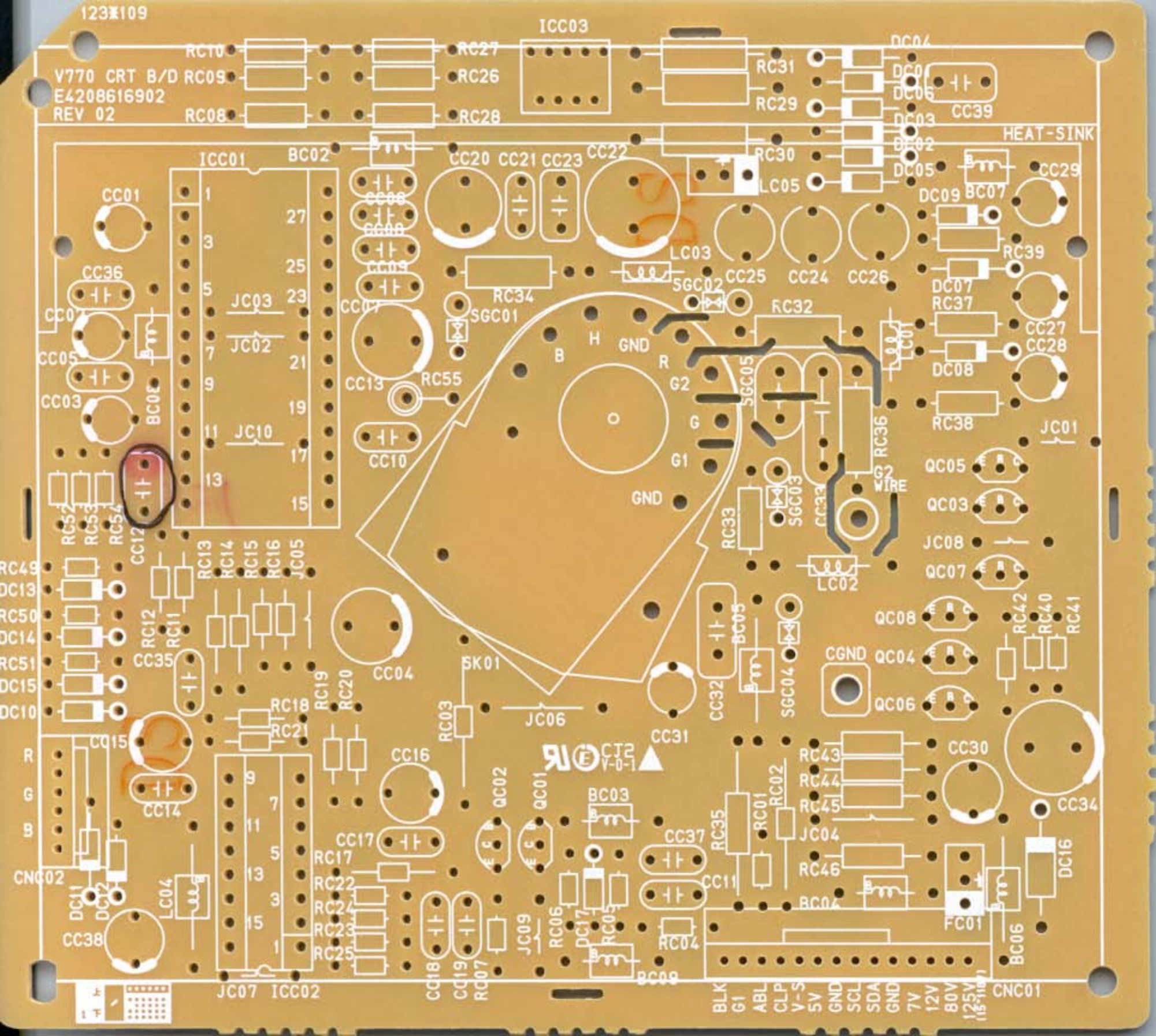
123※109
V770 CRT B/D
E4208616902
REV 02
ICC03
ICC01
ICC02
HEAT-SINK
CJ2
V-0-1
CGND
G2
WIRE
GND
BLK
G1
ABL
CLP
V-S
5V
GND
SCL
SDA
GND
7V
12V
80V
125V
CNC01
CNC02
JC01
JC02
JC03
JC04
JC05
JC06
JC07
JC08
JC10
SK01
SGC01
SGC02
SGC03
SGC04
SGC05
FC01
LC01
LC02
LC03
LC04
LC05
BC02
BC03
BC04
BC05
BC06
BC07
BC08
BC09
RC10
RC09
RC08
RC27
RC26
RC28
RC31
RC29
RC30
RC34
RC32
RC33
RC36
RC37
RC38
RC39
RC43
RC44
RC45
RC46
RC52
RC53
RC54
RC49
RC50
RC51
RC13
RC14
RC15
RC16
RC12
RC11
RC18
RC21
RC19
RC20
RC03
RC17
RC22
RC24
RC23
RC25
RC35
RC01
RC02
RC04
RC05
RC06
RC07
RC42
RC40
RC41
CC01
CC03
CC05
CC07
CC08
CC09
CC10
CC11
CC12
CC13
CC14
CC15
CC16
CC17
CC18
CC19
CC20
CC21
CC22
CC23
CC24
CC25
CC26
CC27
CC28
CC29
CC30
CC31
CC32
CC33
CC34
CC35
CC36
CC37
CC38
CC39
CC04
DC04
DC05
DC06
DC03
DC02
DC09
DC07
DC08
DC13
DC14
DC15
DC10
DC11
DC12
DC16
DC17
QC01
QC02
QC03
QC04
QC05
QC06
QC07
QC08
R
G
B
H
B
R
G2
G
G1

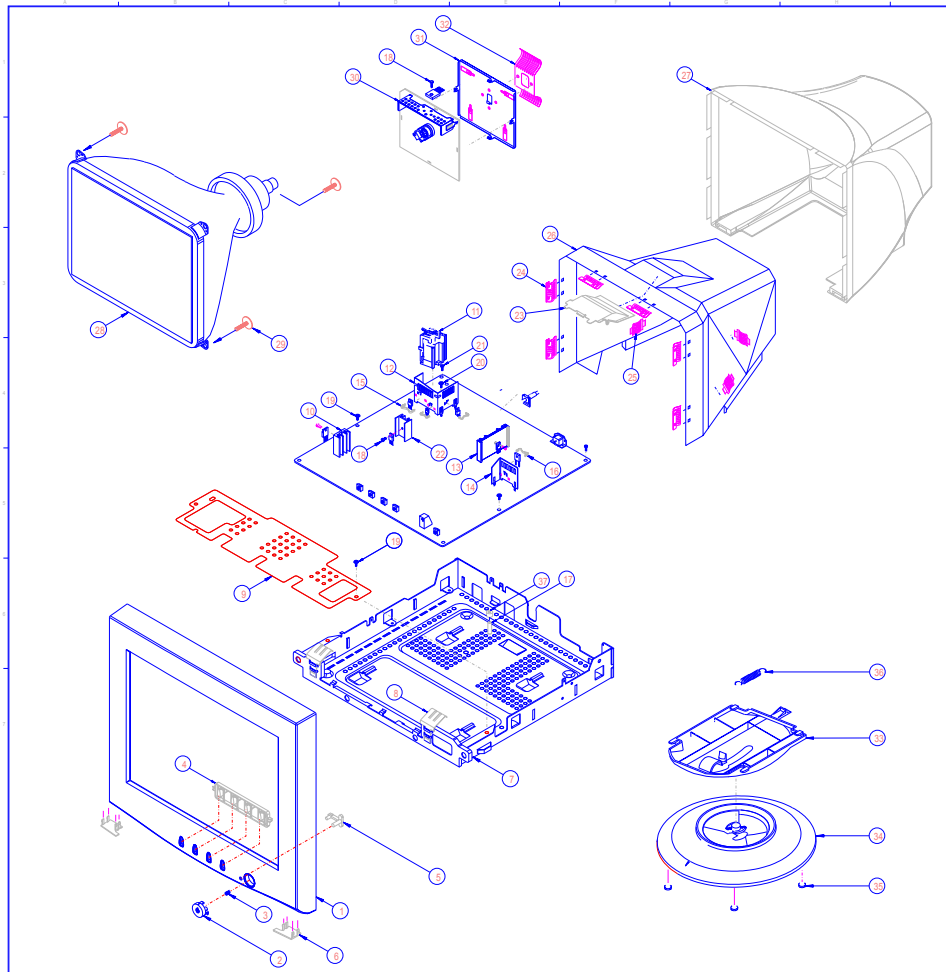

NO.	PART NO.	PART NAME	DESCRIPION	QTY	REMARK
37	6262004800	RUBBER PEM	CR 60-70j	1	
36	6155037100	SWIVEL SPRING	SUS 304 WPB	1	
35	6262004001	RUBBER FOOT	CR 60-70j	3	
34	6201279200	SWIVEL BASE	PS 94-HB	1	
33	6201279300	SWIVEL UPPER	PS 94-HB	1	
32	6120044300	VIDEO SPRING	SUS 304 T=0.3	1	
31	6120042500	F/SHIELD CRT	SPTE T=0.3	1	
30	6124032500	H/S VIDEO ASS`Y	A1050P T=2.0	1	
29	6129035200	SCR TOOTH WAS(+) 5*22	MSZPC	4	
28	3010100160	CRT	CRT	1	
27	6201279100	COVER REAR	ABS 94-HB	1	
26	612042700	SHIELD COVER	AL T=0.3	1	
25	612003700	SHIELD SPRING B	SUS 304 T=0.1	3	
24	6120045000	SHIELD SPRING C	SUS 304 T=0.1	6	
23	6215227800	SHIELD CAP	PC+ABS	1	
22	B4212501010A	HEAT SINK POWER	A6063S T5	1	
21	5004000204	SCREW BIIN(+) 3*12	MSZPC	2	
20	M1118308012	SCREW BIIN(+) 3*12	MSZPC	1	
19	6129027600	SPECIAL.T.T/W(+)3*8	MSZPC	3	
18	M11143008012	SCREW.BIN(+) M3*8	MSZPC	4	
17	6130020301	PEM	SUM	1	
16	6120043200	SPRING CLIP	SUS 304	2	
15	6120043100	SPRING CLIP	SUS 304	2	
14	6124035100	H/S POWER ASS`Y	A1050P T=1.2	1	
13	6124036601	HEAT SINK V	A6063S T5	1	
12	6120043400	F/S FBT ASS`Y	A1050P T=1.2	1	
11	3510500092	FBT	FBT	1	
10	6124020508	HEAT SINK POWER	A6063S T5	1	
9	6225031404	INSULATOR MCU	PVC 0.5T	1	
8	6120042600	CRT SPRING	PBSH 0.3T	1	
7	6101197300	CHASSIS MAIN	SECC T=1.0	1	
6	62152332/33	COVER CAP L/R	ABS 94-HB	2	
5	6220083400	LENS LED	LUCKY PMMA IF 850	1	
4	6215233100	KNOB CONTROL	ABS 94-HB	1	
3	B4214000701A	SPRING COM.	SUS 304 WPB	1	
2	6215233000	KNOB POWER	ABS 94-HB	1	
1	6201287200	COVER FRONT	ABS 94-HB	1	

DRAWN BY	PATERNED BY	CHECKED BY	APPROVED BY
H.C.YANG			J.S.KIM
2001.10.30			2001.10.30

UNLESS OTHERWISE SPECIFIED
DIMENSIONS ARE IN mm (INCHES)
TOLERANCES ARE
LINEAR ±
ANGLES ±
RADII UNLESS NOTED ±

HYUNDAI ELECTRONIC

MDL F771
REF NO.

ANGLE 3rd
SCALE 1/4
SIZE A2
TITLE EXPLODED VIEW
DWG NO. B4210012401A
REV A
SHEET 1/1
FILE NAME

TAMP 231-2