億力光電股份有限公司

EVERVISION ELECTRONICS CO., LTD.

Product Specification For LCD Module

(KVPF-7B-002-16)

Model NO. : VGG482711-6UFLWA(RoHS)

REVISION : 2

☐ APPROVAL FOR SPECIFICATIONS ONLY

■ APPROVAL FOR SPECIFICATIONS AND SAMPLE

CUSTOMER :	APPROVED BY :
STD.	

EVERVISION LCM R&D CENTER			
APPROVED BY	CHECKED BY	PREPARED BY	
李正 4/30'10	張乃元 4/30'10	余宗穎 4/30'10	吳清溪 4/30'10
DIRECTOR	MANAGER	Mechanism Engineer	Electronic Engineer

億力光電股份有限公司總公司
EVERVISION ELECTRONICS LTD.
台北縣中和市建一路 186 號 12 樓
12F,NO.186, JIAN 1st RD., CHUNG HO CITY,
TAIPEI HSIEN, TAIWAN, R.O.C
TEL：+886 2 8227-2788
FAX：+886 2 8227-2789

億力光電股份有限公司台中分公司
EVERVISION ELECTRONICS(T.C) LTD.
台中縣潭子鄉台中加工出口區建國路 19 號
NO.19,CHIEN KUO ROAD.T.E.P.Z TANTZE
427 TAICHUNG HSIEN TAIWAN R.O.C
TEL：+886 4 2532-8889
FAX：+886 4 2532-6689

東莞莞城德寶電子廠
EVERVISION ELECTRONICS(B.V.I) LTD.
廣東省東莞市城區東縱大道天寶路 9 號
NO.9,Tian Bao Rd.,Dong Zong St.,Dong Guan City
Guang Dong. China.
TEL：+86 769 2220 5258
FAX：+86 769 2220 7258

勁佳光電(昆山)有限公司
EVERVISION ELECTRONICS(KUNSHAN) LTD.
江蘇省昆山市玉山鎮高科技工業園城北路 8 號
NO.8,Chengbei Rd., Hi-Tech Industry Park ,
Yushan Town , Kunshan City , Jiangsu,China.
TEL：+86 512 5778 7288
FAX：+86 512 5777 0688

http://www.evervisionlcd.com

1. Table of Contents

No.	Contents	Page
1	Table of Contents	2
2	Record of Revisions	3
3	Module Numbering System	4
4	Application	5
5	Features	5
6	General Specifications	5
7	Absolute Maximum Ratings	6
8	Electrical Characteristics	7
9	Block Diagram	9
10	Input / Output Terminals Pin Assignment	10
11	Interface Timing	13
12	Optical Characteristics	17
13	Reliability Test	20
14	Packaging	21
15	Precautions	22
16	Outline Drawing	23
17	Definition of Labels	24
18	Incoming Inspection Standards	26

2. Record of Revisions

Rev.	Comments	Page	Date
1	Preliminary Specification was first issued.	All	3/4’10
2	Modify 8.3 Projected Capacitive Touch panel And 12. Optical Characteristics	8,17	4/30’10

3. Module Numbering System

V G G 4827 11 – 6 U F L W A

Serial No:A~Z

Backlight Color:
N:Without Backlight;
A:Amber; **B:**Blue; **G:** Green;
L:Yellow; **O:**Orange; **R:**Red;
W:White; **Y:**YellowGreen;
X:Others

Backlight Type:
N:Without Backlight; **E:**EL; **F:**CCFL;
L:General LED; **H:**High NTSC LED ;
R:RGB LED; **X:**Others

LCD Model:
T:TN; **H:**HTN; **G:**STN Gray; **Y:**STN Yellow;
B:STN Blue; **W:**FSTN Black/White;
C:CSTN; **F:**TFT; **O:**OLED; **P:**PLED;
L:LTPS; **N:**Others

LCD Type:
R: Reflective/Positive;
S : Reflective/Negative ;
F : Transflective/Positive ;
G: Transflective/Negative ;
U: Transmissive/Positive ;
T: Transmissive/Negative ; **N:**Others

Temperature Range & View Direction:
General Purpose : **1:**6H **2:**12H **3:**3H **4:**9H **5:**Others
High Performance: **6:**6H **7:**12H **8:**3H **9:**9H **0:**Others

STD Product Serial No.: 01~99
Customer Made Serial No.: A1,A2…A9,B1,B2…B9,C1..

Display Function:
Segment Number / Characters Lines / Column and Row Dots / Length * Width of Other

Display Type:
C:Character Type; **G:**Graphic Type; **S:**Segment Type; **O:**Other

Package Type:
B:COB; **F:**COF; **G:**COG; **H:**Heat Seal; **S:**SMT; **T:**TAB; **O:**Others

4. Application

This specification is applied to the 4.3 inch supported TFT-LCD module With Transparent Type Projected Capacitive Touch Panel, and can display true 16.7M colors (8 bit/ color). The module is designed for PMP, GPS, DMB, other electronic products which require flat panel display of digital signal interface, and used as the input devices for general electric appliances via human's finger.

5. Features

- WQVGA (480×272 pixels) resolution.
- 24 bit parallel RGB.
- Projected Capacitive Touch Panel
  - I^2C Interface
  - Single Touch
  - Chemical Strengthen

6. General Specifications

Item	Specifications	Unit
Screen Size	4.3 (Diagonal)	inch
Display Format	480RGB(H)×272(V)	dot
Active Area	95.04(H)×53.856(V)	mm
PIXEL Pitch	0.198(H)×0.198(V)	mm
Pixel Configuration	RGB Vertical Stripe	-
Display Mode	TN Type Transmissive Mode Normally White	-
Surface Treatment	Hard Coating(7H)	-
Viewing Direction	6 O'clock (The Gray Inversion will appear at this direction)	-
Outline Dimension	115.1(W)×73.9(H)×4.825(D)	mm
Weight	(72)	g
RoHS Compliance	Evervision certifies this product to be in compliance with European Union Directive 2002/95/EC on the restriction of certain hazardous substances in electrical and electronic equipment.	-

7. Absolute Maximum Ratings

7.1 Absolute Ratings of Environment

Item	Symbol	Value		Unit	Note
		Min.	Max.		
Storage Temperature	T_{ST}	-30	+80	°C	(1)(3)
Operating Temperature	T_{OP}	-20	+70	°C	(1)(2)

Note1: Background color changes slightly depending on ambient temperature.
This phenomenon is reversible.

Note2: Ta≦70℃: 75%RH max.

Note3: Please refer to item of RELIABILITY.

7.2 Electrical Absolute Ratings

7.2.1 TFT-LCD Module

(Ta=25±2°C, VSS=0V)

Item	Symbol	Value		Unit	Note
		Min.	Max.		
Digital Power Supply Voltage	DVDD	-0.3	4.0	V	-

7.2.2 Backlight Unit

(Ta=25±2°C)

Item	Symbol	Value		Unit	Note
		Min.	Max.		
Current of Backlight Unit	I_B	-	25	mA	(1)
Reverse Voltage	V_R	-	50	V	(1)

Note (1) Permanent damage to the device may occur if maximum values are exceeded or reverse voltage is loaded.

8. Electrical Characteristics

8.1 TFT-LCD Module

(Ta=25±2°C)

Item	Symbol	Value			Unit	Note
		Min.	Typ.	Max.		
Digital Power Supply Voltage	DVDD	3.0	3.3	3.6	V	-
Input High Threshold Voltage	VIH	0.7DVDD	-	DVDD	V	-
Input Low Threshold Voltage	VIL	0	-	0.3 DVDD	V	-
VSYNC Frequency	F_V	-	59.94	-	Hz	-
HSYNC Frequency	F_H	-	17.14	-	KHz	
Pixel Clock	PCLK	-	9.0	15.0	MHz	-

(VSS = 0V)

Parameter	SYMBOL	Condition	Min.	Typ.	Max.	Unit	Remarks
Digital Current	IDVDD	DVDD=3.3V	-	22.8	31.92	mA	(1)
Total Power Consumption	PC	-	-	75.24	105.34	mW	(1)

Note (1) The specified power consumption is under the conditions at DVDD = 3.3V, FV=60Hz, DCLK=9.0 MHz, whereas a power dissipation check Pattern below is displayed.

Black Pattern / 0 Gray

Active Area

8.2 Backlight Unit

(Ta=25±2°C)

Item	Symbol	Value			Unit	Note
		Min.	Typ.	Max.		
LED Voltage	VL	-	(33)	-	V	(1)
Current of Backlight Unit	I_B	-	20	-	mA	(1)
Power Consumption	P_{BL}	-	(660)	-	mW	(1)
LED life time	-	20000	30000	-	Hr	(2)

Note (1) The driving design of backlight unit is dependent on serial consideration of 10 LEDs.

(2) The LED life time is defined as the module brightness decrease to 50%, original brightness at Ta=25℃ , I_B =20mA.

8.3 Projected Capacitive Touch panel

Item		Value			Unit	Note
		Min.	Typ.	Max.		
Operating Voltage		3.0	3.3	3.6	V	-
Power Consumption		-	16.5	23.1	mW	@3.3V
Resolution	X	0~2047			-	-
	Y	0~2047			-	-
Interface		I^2C				-
Function		Single Touch				-

9. Block Diagram

TFT-LCD Module with Backlight Unit

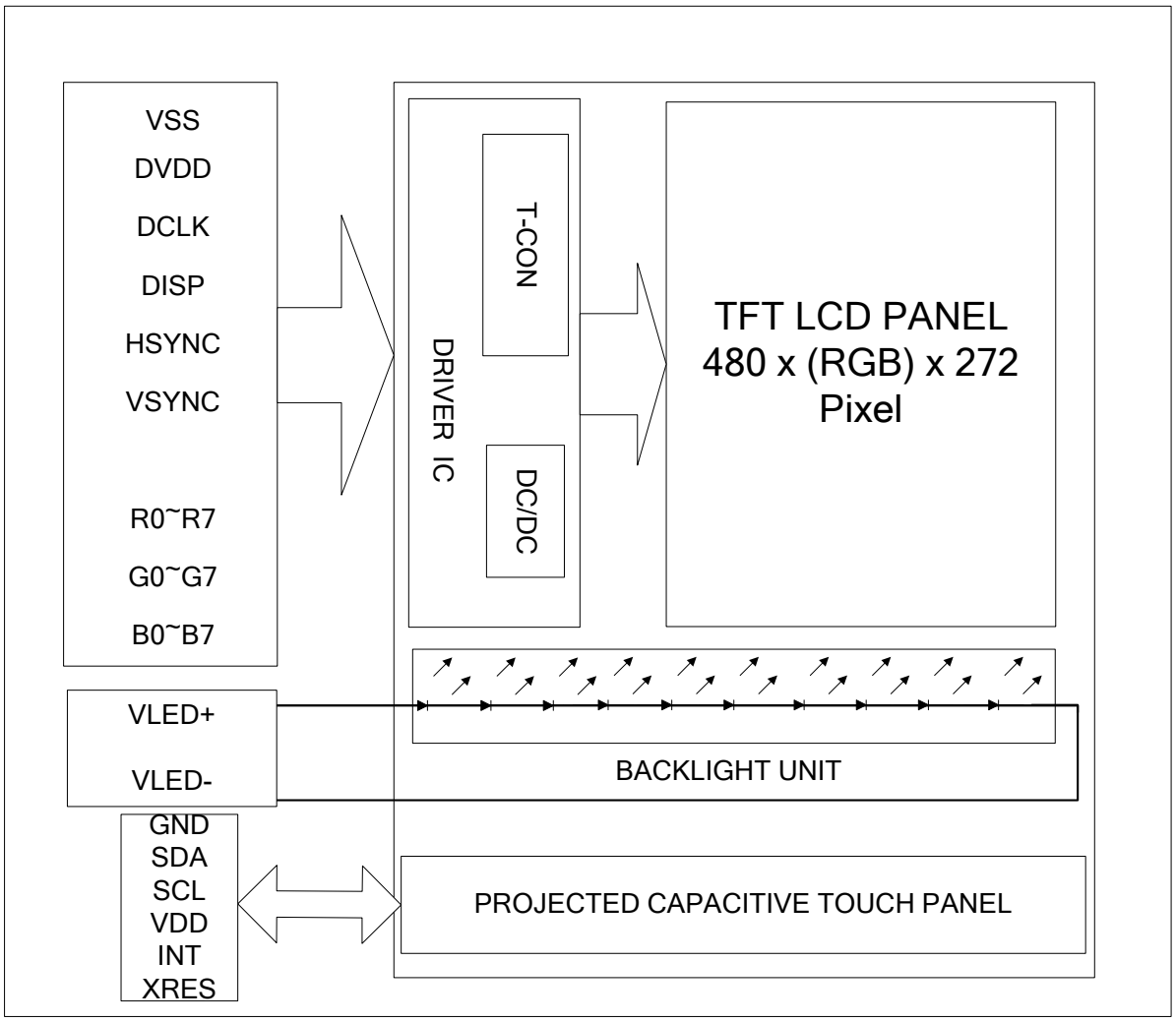

10. Input / Output Terminals Pin Assignment

10.1 TFT-LCD Module

(Reference Connector :

Hirose Electric CO., LTD. Product No.: FH12A-40S-0.5SH(55) Top contact type)

Pin No.	Symbol	Description	Pin No.	Symbol	Description
1	VSS	Ground	21	B0	Blue data(LSB)
2	VSS	Ground	22	B1	Blue data
3	DVDD	POWER SUPPLY(+3.3V)	23	B2	Blue data
4	DVDD	POWER SUPPLY(+3.3V)	24	B3	Blue data
5	R0	Red data(LSB)	25	B4	Blue data
6	R1	Red data	26	B5	Blue data
7	R2	Red data	27	B6	Blue data
8	R3	Red data	28	B7	Blue data(MSB)
9	R4	Red data	29	VSS	Ground
10	R5	Red data	30	PCLK	Pixel clock
11	R6	Red data	31	DISP	Display ON/OFF Signal
12	R7	Red data(MSB)	32	HSYNC	Horizontal Sync input with negative polarity
13	G0	Green data(LSB)	33	VSYNC	Vertical Sync input with negative polarity
14	G1	Green data	34	NC	NC
15	G2	Green data	35	NC	NC
16	G3	Green data	36	NC	NC
17	G4	Green data	37	NC	NC
18	G5	Green data	38	NC	NC
19	G6	Green data	39	NC	NC
20	G7	Green data(MSB)	40	NC	NC

10.2 Backlight

(Reference Connector :

Kyocera Elco Corporation Product No. : 6298 Bottom contact type)

Terminnal No.	Signal	Functions
1	VLED-	LED Power Source Input terminal (Cathode side)
2	NC	No Connection
3	NC	No Connection
4	VLED+	LED Power Source Input terminal (Anode side)

10.3 Projected Capacitive Touch panel

(Reference Connector: Cvilux, Product No.:CF25061D0R0-05)

No.	Symbol	Functions
1	GND	Ground
2	SDA	I^2C data
3	SCL	I^2C clock
4	VDD	Power Supply Voltage
5	INT	Interrupt active low, asserted to request Master start a new transaction.
6	XRES	Active high external reset with internal pull down. Minimum of Pulse Width is 10μs.

10.4 Color Data Input Assignment

The brightness of each primary color(red, green and blue) is based on the 8 bit gray scale data input for the color. The higher the binary input, the brighter the color. The table provides the assignment of color versus data input.

Color		Data Signal																							
		Red								Green								Blue							
		R7	R6	R5	R4	R3	R2	R1	R0	G7	G6	G5	G4	G3	G2	G1	G0	B7	B6	B5	B4	B3	B2	B1	B0
Basic Colors	Black	0	0	0	0	0	0	0	0	0	0	0	0	0	0	0	0	0	0	0	0	0	0	0	0
	Red	1	1	1	1	1	1	1	1	0	0	0	0	0	0	0	0	0	0	0	0	0	0	0	0
	Green	0	0	0	0	0	0	0	0	1	1	1	1	1	1	1	1	0	0	0	0	0	0	0	0
	Blue	0	0	0	0	0	0	0	0	0	0	0	0	0	0	0	0	1	1	1	1	1	1	1	1
	Cyan	0	0	0	0	0	0	0	0	1	1	1	1	1	1	1	1	1	1	1	1	1	1	1	1
	Magenta	1	1	1	1	1	1	1	1	0	0	0	0	0	0	0	0	1	1	1	1	1	1	1	1
	Yellow	1	1	1	1	1	1	1	1	1	1	1	1	1	1	1	1	0	0	0	0	0	0	0	0
	White	1	1	1	1	1	1	1	1	1	1	1	1	1	1	1	1	1	1	1	1	1	1	1	1
Gray Scale Of RED	Red(0) / Dark	0	0	0	0	0	0	0	0	0	0	0	0	0	0	0	0	0	0	0	0	0	0	0	0
	Red(1)	0	0	0	0	0	0	0	1	0	0	0	0	0	0	0	0	0	0	0	0	0	0	0	0
	Red(2)	0	0	0	0	0	0	1	0	0	0	0	0	0	0	0	0	0	0	0	0	0	0	0	0
	:	:	:	:	:	:	:	:	:	:	:	:	:	:	:	:	:	:	:	:	:	:	:	:	:
	:	:	:	:	:	:	:	:	:	:	:	:	:	:	:	:	:	:	:	:	:	:	:	:	:
	Red(253)	1	1	1	1	1	1	0	1	0	0	0	0	0	0	0	0	0	0	0	0	0	0	0	0
	Red(254)	1	1	1	1	1	1	1	0	0	0	0	0	0	0	0	0	0	0	0	0	0	0	0	0
	Red(255)	1	1	1	1	1	1	1	1	0	0	0	0	0	0	0	0	0	0	0	0	0	0	0	0
Gray Scale Of Green	Green(0) / Dark	0	0	0	0	0	0	0	0	0	0	0	0	0	0	0	0	0	0	0	0	0	0	0	0
	Green(1)	0	0	0	0	0	0	0	0	0	0	0	0	0	0	0	1	0	0	0	0	0	0	0	0
	Green(2)	0	0	0	0	0	0	0	0	0	0	0	0	0	0	1	0	0	0	0	0	0	0	0	0
	:	:	:	:	:	:	:	:	:	:	:	:	:	:	:	:	:	:	:	:	:	:	:	:	:
	:	:	:	:	:	:	:	:	:	:	:	:	:	:	:	:	:	:	:	:	:	:	:	:	:
	Green(253)	0	0	0	0	0	0	0	0	1	1	1	1	1	1	0	1	0	0	0	0	0	0	0	0
	Green(254)	0	0	0	0	0	0	0	0	1	1	1	1	1	1	1	0	0	0	0	0	0	0	0	0
	Green(255)	0	0	0	0	0	0	0	0	1	1	1	1	1	1	1	1	0	0	0	0	0	0	0	0
Gray Scale Of Blue	Blue(0) / Dark	0	0	0	0	0	0	0	0	0	0	0	0	0	0	0	0	0	0	0	0	0	0	0	0
	Blue(1)	0	0	0	0	0	0	0	0	0	0	0	0	0	0	0	0	0	0	0	0	0	0	0	1
	Blue(2)	0	0	0	0	0	0	0	0	0	0	0	0	0	0	0	0	0	0	0	0	0	0	1	0
	:	:	:	:	:	:	:	:	:	:	:	:	:	:	:	:	:	:	:	:	:	:	:	:	:
	:	:	:	:	:	:	:	:	:	:	:	:	:	:	:	:	:	:	:	:	:	:	:	:	:
	Blue(253)	0	0	0	0	0	0	0	0	0	0	0	0	0	0	0	0	1	1	1	1	1	1	0	1
	Blue(254)	0	0	0	0	0	0	0	0	0	0	0	0	0	0	0	0	1	1	1	1	1	1	1	0
	Blue(255)	0	0	0	0	0	0	0	0	0	0	0	0	0	0	0	0	1	1	1	1	1	1	1	1

11. Interface Timing

11.1 Timing Requirement 1

Parameter	Symbol	Spec.			Unit
		Min.	Typ.	Max.	
Clock cycle	f_{CLK} (1)	-	9	15	MHz
Hsync cycle	1/th	-	17.14	-	KHz
Vsync cycle	1/tv	-	59.94	-	Hz
Horizontal Signal					
Horizontal cycle	th	525	525	605	CLK
Horizontal display period	thd	480	480	480	CLK
Horizontal front porch	thf	2	2	82	CLK
Horizontal pulse width	thp (2)	2	41	41	CLK
Horizontal back porch	thb (2)	2	2	41	CLK
Vertical Signal					
Vertical cycle	tv	285	286	399	H (1)
Vertical display period	tvd	272	272	272	H (1)
Vertical front porch	tvf	1	2	227	H (1)
Vertical pulse width	tvp (2)	1	10	11	H (1)
Vertical back porch	tvb (2)	1	2	11	H (1)

Note: (1) Unit: CLK=1/ f_{CLK} , H= th,

(2) It is necessary to keep tvp+tvb=12 and thp+thb=43 in sync mode. DE mode is unnecessary to keep it.

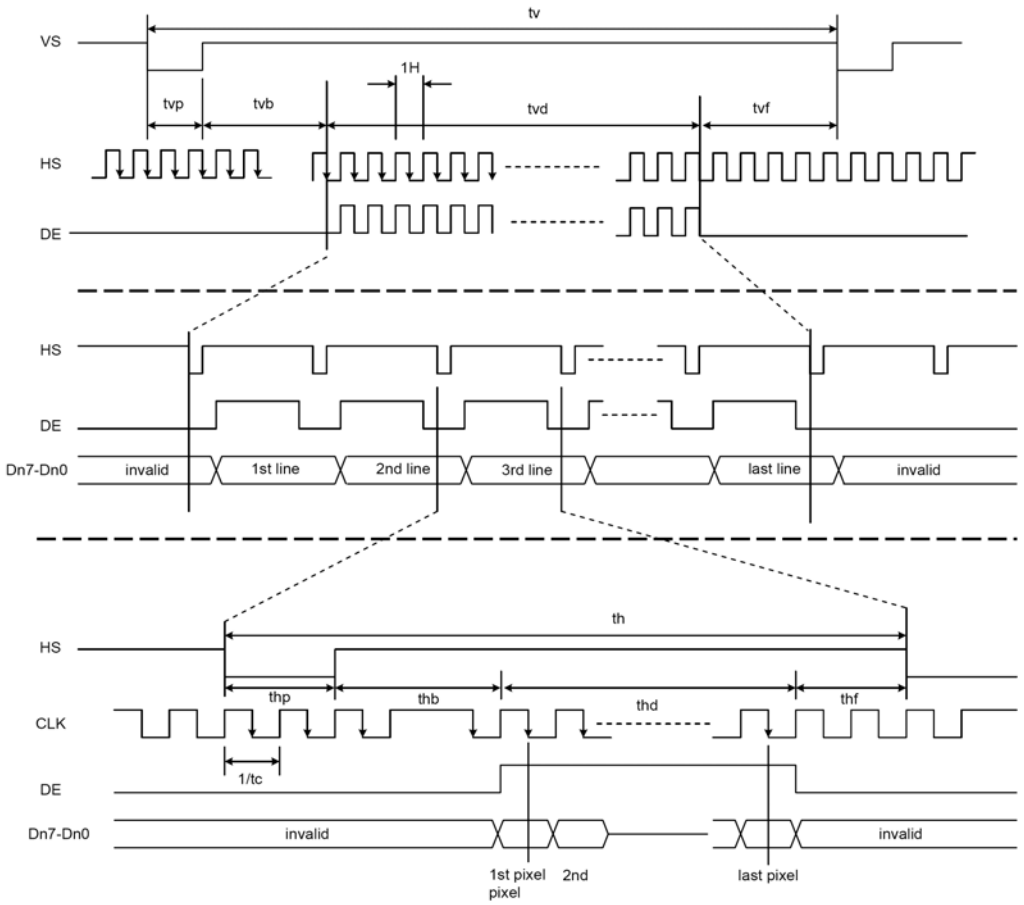

Figure 11.1 Input timing

11.2 Timing Requirement 2

(TA =25ºC, DVDD=3.0V to 3.6V, VSS= 0V, tr (1)=tf (1)=2ns)

PARAMETER	Symbol	Min.	Typ.	Max.	Unit
DISP setup time	t_{diss}	10	-	-	ns
DISP hold time	t_{dish}	10	-	-	ns
Clock period	PW_{CLK} *1	66.7	-	-	ns
Clock pulse high period	PWH *1	26.7	-	-	ns
Clock pulse low period	PWL *1	26.7	-	-	ns
Hsync setup time	t_{hs}	10	-	-	ns
Hsync hold time	t_{hh}	10	-	-	ns
Data setup time	t_{ds}	10	-	-	ns
Data hold time	t_{dh}	10	-	-	ns
Vsync setup time	t_{vhs}	10	-	-	ns
Vsync hold time	t_{vhh}	10	-	-	ns

Note:

1. For parallel interface, maximum clock frequency is 15MHz.
2. tr, tf is defined 10% to 90% of signal amplitude.

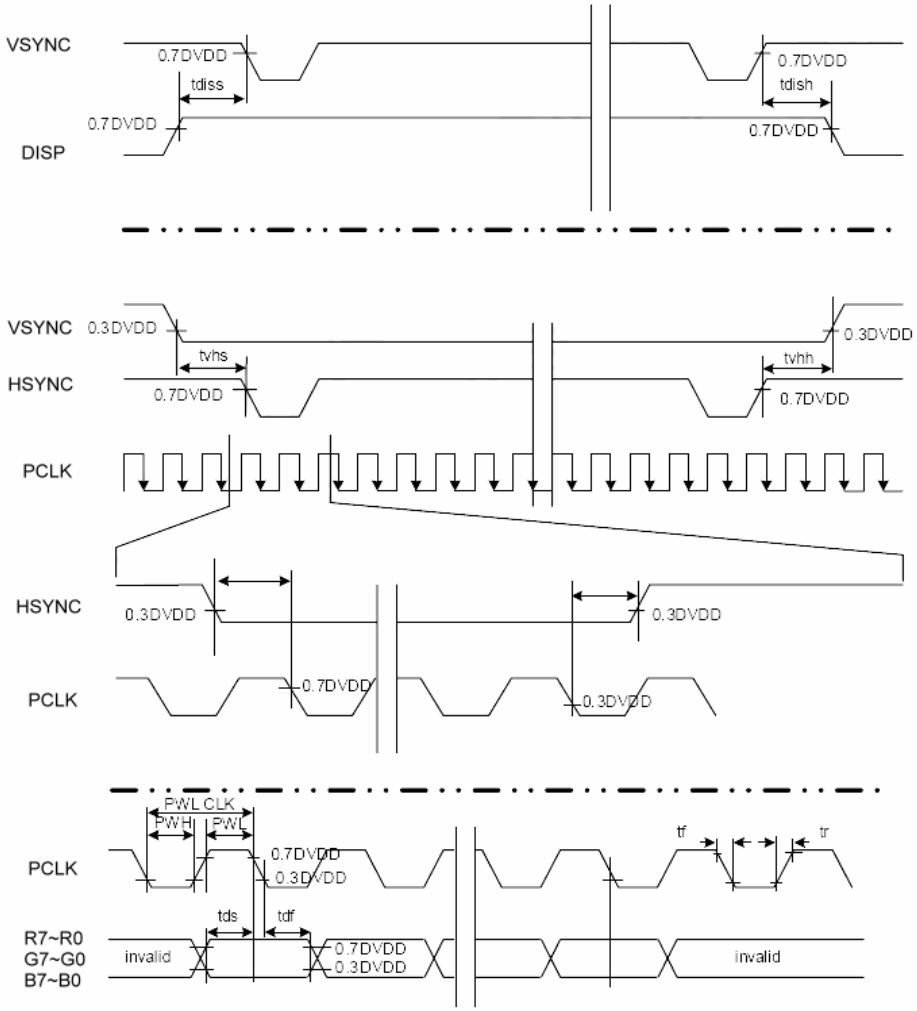

Figure 11.2 Input setup timing

11.3 Timing Requirement of Projected Capacitive Touch Panel

I^{2}C Data Format:

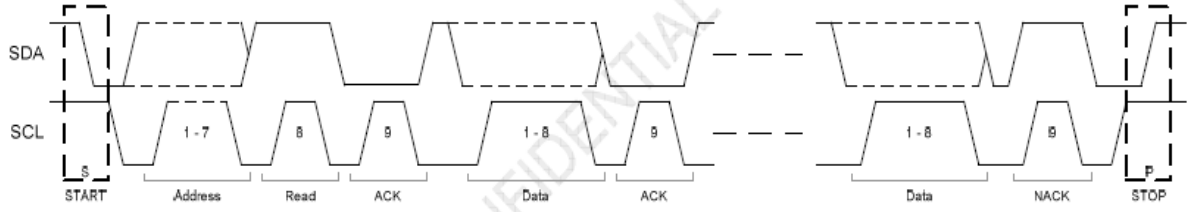

Read mode: Master-receiver, slave-transmitter.

S	ADDRESS	R	A	DATA 1	A	DATA 2	A	DATA 3	A	DATA 4	A	DATA 5	A	DATA 6	N	P

Write mode:

S	ADDRESS	W	A	DATA 1 Register address	A	DATA 2 Register value	N	P

	From Master to Slave
	From Slave to Master

S	=	START condition
P	=	STOP condition
R	=	Data direction READ (SDA HIGH)
W	=	Data direction WRITE (SDA LOW)
A	=	Acknowledge (SDA LOW)
N	=	Not acknowledge (SDA HIGH)
ADDRESS	=	7-bit (0Ah)
DATA	=	8-bit

Single touch report packet:

Each report packet contains 6 bytes. The single touch packet format is as follows:

	MSB							LSB
Byte 1	1	Reserved						Status
Byte 2	0	0	0	0	A10	A9	A8	A7
Byte 3	0	A6	A5	A4	A3	A2	A1	A0
Byte 4	0	0	0	0	B10	B9	B8	B7
Byte 5	0	B6	B5	B4	B3	B2	B1	B0
Byte 6	0	P6	P5	P4	P3	P2	P1	P0

Status: indicates the touch status: 1 for touch down and 0 for touch up.
A10 – A0: 11 bits of 1st direction raw data
B10 – B0: 11 bits of 2nd direction raw data
P6 – P0: 7 bits of finger pressure
Please be aware that A and B just represent 2 resolution directions of the touch panel. The reported coordinates are (0~2047, 0~2047), the bottom left is (0, 0).

Operating Mode Register:

Register Address	Register Name	Bit7	Bit6	Bit5	Bit4	Bit3	Bit2	Bit1	Bit0	Default
0x07	Operating Mode	Wakeup and Sleep								
		0	0	0	0	0	0	0	Wakeup / Sleep	0x01
		Single touch and Multi touch gesture								
		0	0	0	1	0	Slide	Rotate	Zoom	0x10
		Get firmware version								
		0	1	0	0	0	1	0	0	

Sleep: Write (0x07,0x00), the chip sleep and power saving.

Wakeup: Write (0x07,0x01)to wakeup the chip.

12. Optical Characteristics

The optical characteristics should be measured in a dark environment (≦ 1 lux) or equivalent state with the methods shown in Note (5).

Item		Symbol	Conditions	Min.	Typ.	Max.	Unit	Note
Contrast Ratio		CR	θ_X=0°, θ_Y =0° Viewing Normal Angle	300	(450)	-	-	(2),(5)
Response Time		T_{R+} T_F		-	20	-	ms	(3)
Luminance(Center)		LC		450	(600)	-	cd/m^2	(4),(5)
Brightness uniformity		BUNI		70	(75)	-	%	(5),(6)
Color Chromaticity	Red	Rx		0.570	0.620	0.670	-	(1),(5)
		Ry		0.290	0.340	0.390	-	
	Green	Gx		0.290	0.340	0.390	-	
		Gy		0.510	0.560	0.610	-	
	Blue	Bx		0.090	0.140	0.190	-	
		By		0.050	0.100	0.150	-	
	White	Wx		0.260	0.310	0.360	-	
		Wy		0.270	0.320	0.370	-	
Viewing Angle	Horizontal	θ_X+	CR≥10	55	(65)	-	deg.	
		θ_X-		55	(65)	-		
	Vertical	θ_Y+		40	(50)	-		
		θ_Y-		50	(60)	-		

Note (1) Definition of Viewing Angle (θx, θy):

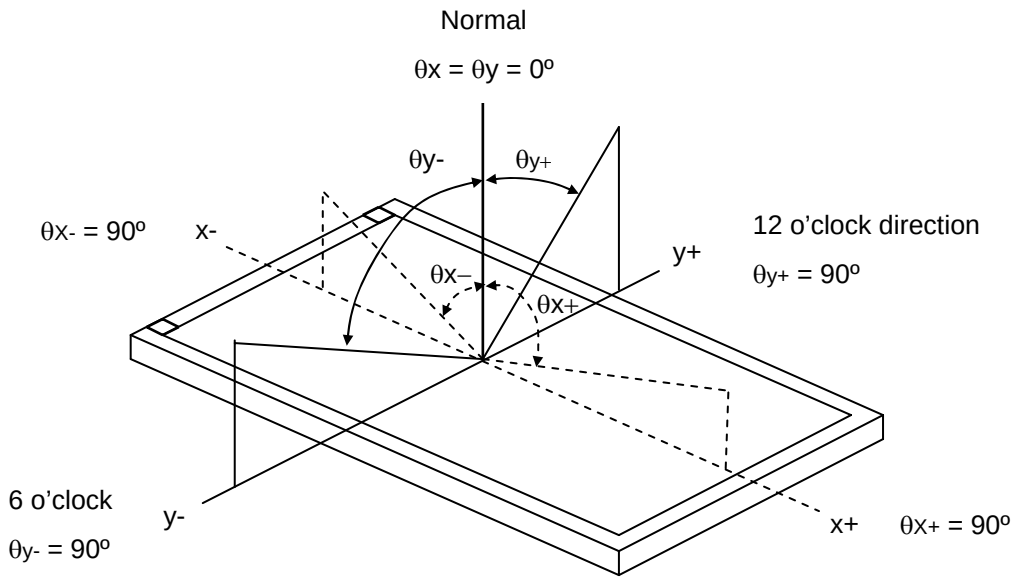

Note (2) Definition of Contrast Ratio (CR):

$$\text{Contrast ratio (CR)} = \frac{\text{Luminance measured when LCD on the "White" state}}{\text{Luminance measured when LCD on the "Black" state}}$$

Note (3) Definition of Response Time (T_R, T_F):

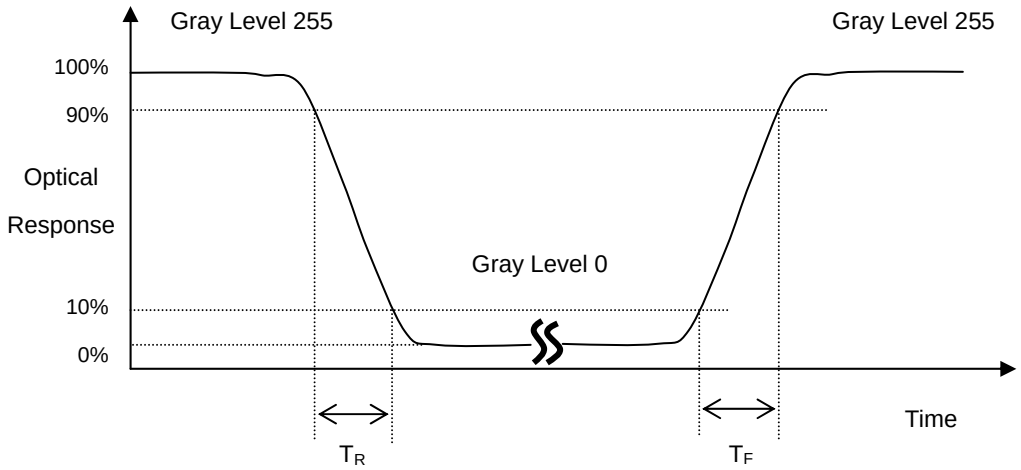

Note (4) Measurement Set-Up:

The LCD module should be stabilized at a given temperature for 30 minutes to avoid abrupt temperature change during measuring. In order to stabilize the luminance, the measurement should be executed after lighting Backlight for 30 minutes in a windless room.

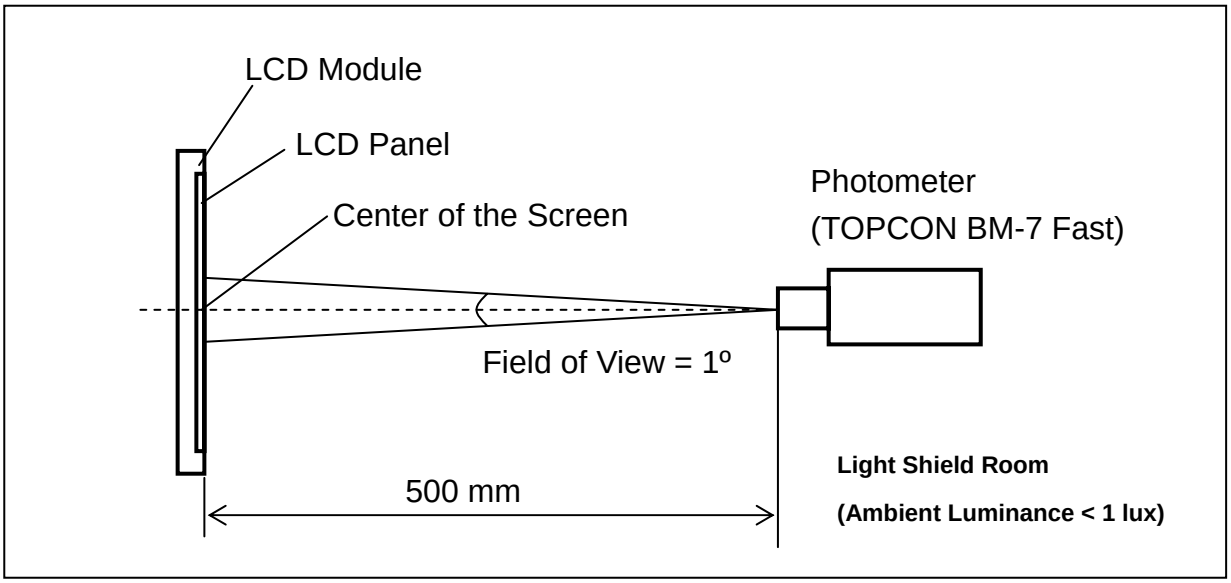

Note (5) Definition of brightness uniformity

Brightness uniformity=(Min Luminance of 9 points)/(Max Luminance of 9 points)×100%

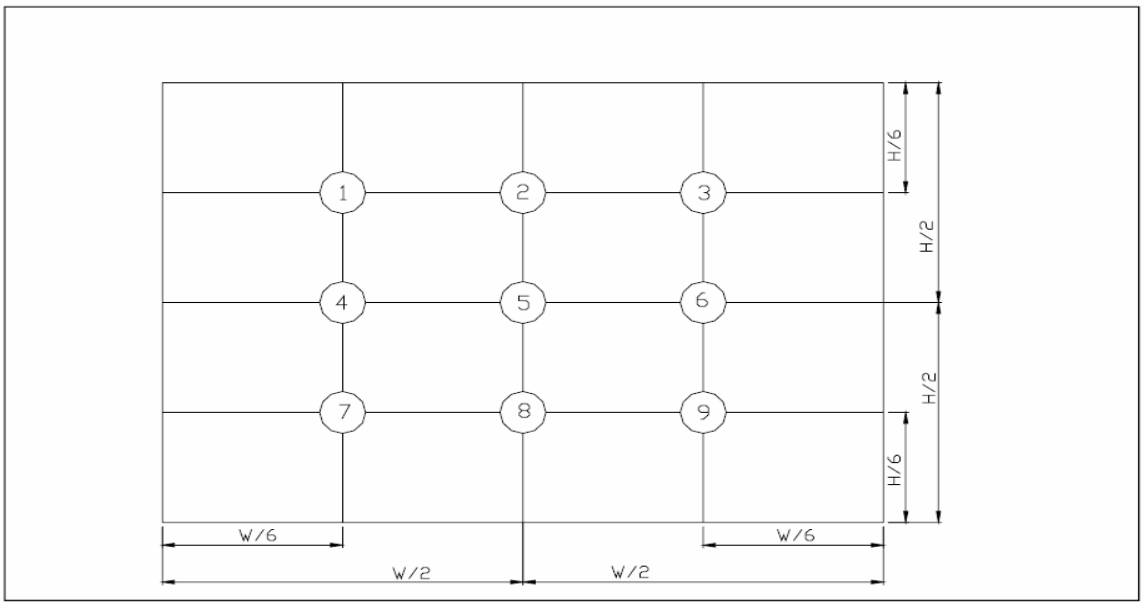

(單位 ：mm)

13. Reliability Test

No.	Test Items	Test Condition	Remark
1	High Temperature Storage Test	T_a= 80℃ 200 hours	-
2	Low Temperature Storage Test	T_a= -30℃ 200 hours	-
3	High Temperature Operation Test	T_a= 70℃ 200 hours	-
4	Low Temperature Operation Test	T_a= -20℃ 200 hours	-
5	High Temperature and High Humidity Operation Test	T_a=60℃ 90%RH 200 hours	-
6	Electro Static Discharge Test (non-operating)	-Panel Surface/Top Case : 150pF, 330Ω Air: ±15kV, Contact: ±8kV	-
7	Mechanical Shock Test (non-operating)	Half sine wave, 100G, 6ms 3 times shock of each six surfaces	-
8	Vibration Test (non-operating)	Sine wave, 10 ~ 55 ~ 10Hz, 3 axis, 2 hours/axis	-
9	Thermal Shock Test (non-operating)	-20℃(30min) ~ 70℃(30min),100 cycles	-
10	Drop Test(with Carton) (non-operating)	Height: 80cm 1 corner, 3 edges, 6 surfaces	-

14. Packaging

Packing Method

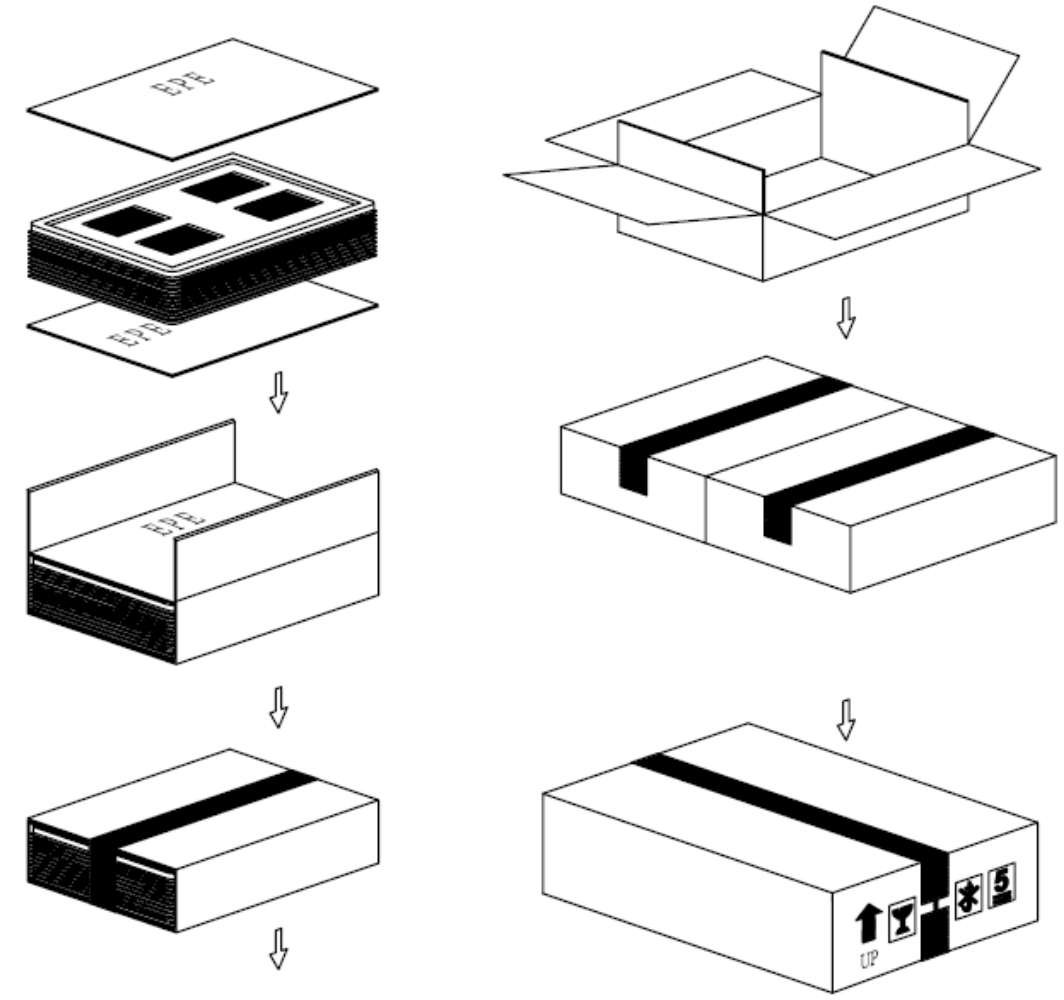

	PARTS LIST				
	ITEM	SIZE(LxWxH) unit:mm	MATERIAL	Q.T.Y	NOTE
1	TRAY	372.0x262.0x13.6	PET	26	
2	CARD BOARD(P1)	945.0x275.0x3.5	CARTON	2	
3	CARD BOARD(P2)	816.0x375.0x3.5	CARTON	2	
4	CARD BOARD(P3)	375.0x265.0x3.5	CARTON	4	
5	INTERNAL BOX(B2)	400.0x290.0x150.0	CARTON	2	
6	EXTERNAL BOX(B1)	600.0x420.0x170.0	CARTON	1	
7	PRODUCT	115.1x73.9x4.825		96	

15. Precautions

15.1 Assembly and Handling Precautions

(1) Do not apply rough force such as bending or twisting to the module during assembly.

(2) It's recommended to assemble or to install a module into the user's system in clean working areas. The dust and oil may cause electrical short or worsen the polarizer.

(3) Don't apply pressure or impulse to the module to prevent the damage of LCD panel and Backlight.

(4) Always follow the correct power-on sequence when the LCD module is turned on. This can prevent the damage and latch-up of the CMOS LSI chips.

(5) Do not plug in or pull out the I/F connector while the module is in operation.

(6) Do not disassemble the module.

(7) Use a soft dry cloth without chemicals for cleaning, because the surface of polarizer is very soft and easily scratched.

(8) Moisture can easily penetrate into LCD module and may cause the damage during operation.

(9) High temperature or humidity may deteriorate the performance of LCD module. Please store LCD module in the specified storage conditions.

(10) When ambient temperature is lower than 10ºC, the display quality might be reduced. For example, the response time will become slow.

15.2 Safety Precautions

(1) If the liquid crystal material leaks from the panel, it should be kept away from the eyes or mouth. In case of contact with hands, skin or clothes, it has to be washed away thoroughly with soap.

(2) After the module's end of life, it is not harmful in case of normal operation and storage.

15.3 Terms of Warrant

(1) Acceptance inspection period

The period is within one month after the arrival of contracted commodity at the buyer's factory site.

(2) Applicable warrant period

The period is within twelve months since the date of shipping out under normal using and storage conditions.

16.Outline Drawing

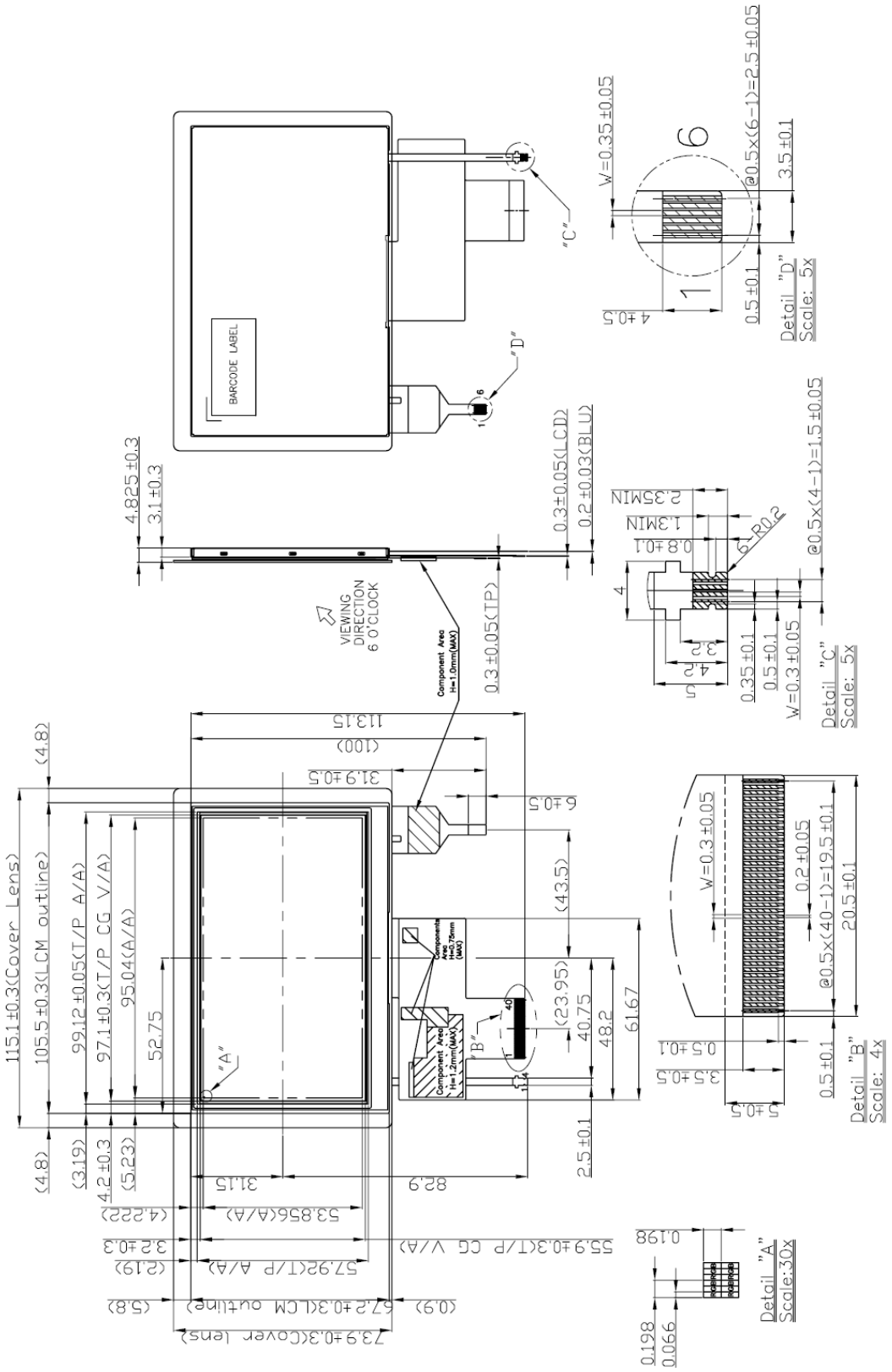

17.Definition of Labels

The bar code nameplate is pasted on each module as illustration, and its definitions are as following explanation.

VGG482711-6UFLWA

ABCDEFGHIJKLM

(a) Module Name: VGG482711-6UFLWA

(b) Serial ID:

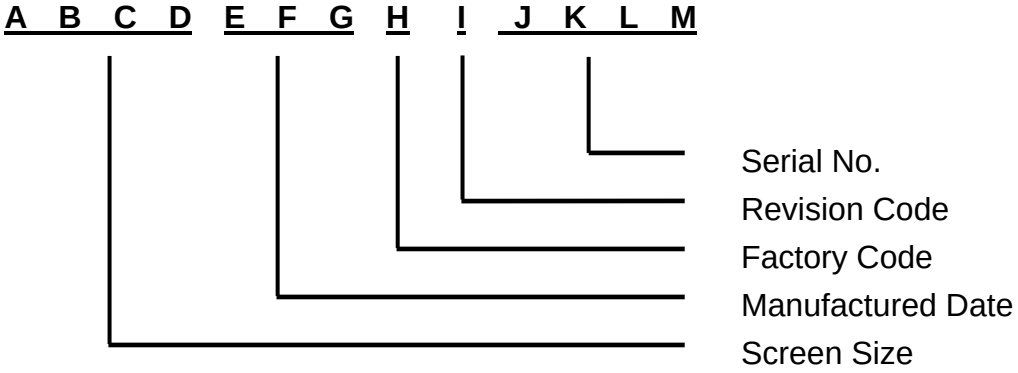

Serial ID includes the information as below:

(a) Screen size (Diagonal): Inch Code (ABCD)

3.5” → 0350

10.4” → 1040

(b) Manufactured Date: Year, Month, Day (EFG)

Year (E)

Year	2000	2001	2002	2003	2004	2005	2006	2007	2008	2009
Mark	0	1	2	3	4	5	6	7	8	9
Year	2010	2011	2012	2013	2014	2015	2016	2017	2018	2019
Mark	A	B	C	D	E	F	G	H	I	J

Month (F)

Month	Jan.	Feb.	Mar.	Apr.	May	Jun.	Jul.	Aug.	Sep.	Oct.	Nov.	Dec.
Mark	1	2	3	4	5	6	7	8	9	A	B	C

Day (G)

Day	1	2	3	4	5	6	7	8	9	10	11	12	13	14	15	16
Mark	1	2	3	4	5	6	7	8	9	A	B	C	D	E	F	G
Day	17	18	19	20	21	22	23	24	25	26	27	28	29	30	31	
Mark	H	I	J	K	L	M	N	O	P	Q	R	S	T	U	V	

(c) Factory Code (H):

For EVERVISION internal use.

(d) Revision Code (I):

Cover all the change, for example: 1: Rev.1, 2: Rev.2, 3: Rev.3…etc.

(e) Serial No. (JKLM):

Manufacturing sequence of product, for example: 0001~9999.

18. Incoming Inspection Standards

18.1 The environmental condition of inspection

The environmental condition and visual inspection shall be conducted as below.

(1) Ambient temperature 25 ± 5℃

(2) Humidity: 60 ± 5% RH

(3) Viewing distance is approximately 35 ~ 40 cm

(4)Viewing angle is normal to the LCD panel as Fig _1(10°)

(5) Ambient Illumination: 300 ~ 500 Lux for external appearance inspection

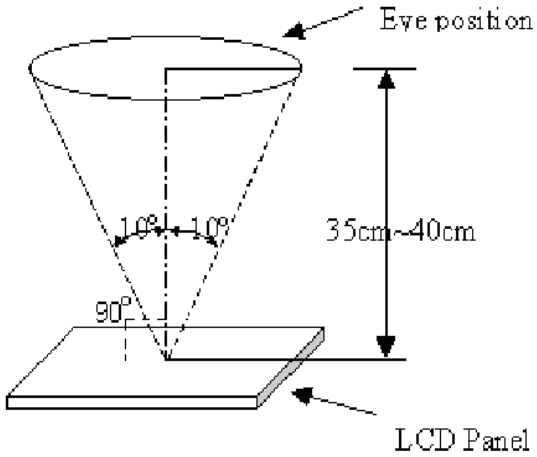

Fig _ 1

18.2 The defects classify of AQL as following:

Class of defects	AQL	Definition
Major	0.65%	It is defect that is likely to result in failure or to reduce materially the usability of the intended function.
Minor	1.5%	It is a defect that will not result in functioning problem with deviation classified.

18.3 Inspection Parameters

<table>
<tr><th colspan="2">Item</th><th colspan="4">Specification/Description</th><th>Note</th></tr>
<tr><td rowspan="2">Display</td><td rowspan="2">Function</td><td colspan="4">No Display</td><td>-</td></tr>
<tr><td colspan="4">Malfunction</td><td>-</td></tr>
<tr><td rowspan="9">Operating</td><td>Contrast ratio</td><td colspan="4">Out of Spec</td><td>-</td></tr>
<tr><td>Line defect</td><td colspan="4">No obvious Vertical and Horizontal line defect in bright , dark and colored.</td><td>-</td></tr>
<tr><td rowspan="7">Point Defect (red, green, blue, dark， white)</td><td rowspan="2">Item</td><td colspan="3">Acceptable number</td><td rowspan="7">Note: 1、 4、5、6</td></tr>
<tr><td>A</td><td>B</td><td>Total</td></tr>
<tr><td>BRIGHT DOT</td><td>N≦2</td><td>N≦2</td><td rowspan="3">N≦7</td></tr>
<tr><td>DARK DOT</td><td>N≦3</td><td>N≦4</td></tr>
<tr><td>TOTAL DOT</td><td>N≦4</td><td>N≦5</td></tr>
<tr><td>TWO ADJACENT DOT</td><td colspan="3">NOT ALLOWED</td></tr>
<tr><td>THREE OR MORE ADJACENT DOT</td><td colspan="3">NOT ALLOWED</td></tr>
<tr><td rowspan="3">External Inspection (non-operating)</td><td>Scratch on the polarizer</td><td colspan="4"><table><tr><td>L(mm)</td><td>W(mm)</td><td>Acceptable number</td></tr><tr><td>L≦2.5</td><td>W≦0.1</td><td>4</td></tr><tr><td>L＞2.5</td><td>W＞0.1</td><td>0</td></tr></table></td><td>Note:2</td></tr>
<tr><td>Dent or bubble on the polarizer</td><td colspan="4"><table><tr><td>Dimension(mm)</td><td>Acceptable number</td></tr><tr><td>D≦0.5</td><td>4</td></tr><tr><td>D≦0.15</td><td>Disregard</td></tr></table></td><td>Note:3</td></tr>
<tr><td>Foreign material on the polarizer</td><td colspan="4"><table><tr><td>Dimension(mm)</td><td>Acceptable number</td></tr><tr><td>D≦0.5</td><td>4</td></tr><tr><td>D≦0.15</td><td>Disregard</td></tr></table></td><td>Note:3</td></tr>
</table>

Item		Specification/Description			Note
Touch Panel	Scratch	L(mm)	W(mm)	Acceptable number	Note:2、8、9
		L≦10	W≦0.05	Disregard	
			0.05＜W≦0.1	N≦5	
			0.1＜W	0	
	Foreign Materials (Linear shape)	L(mm)	W(mm)	Acceptable number	Note:2、8、9
		L≦2	W≦0.08	Disregard	
		L≦8	W≦0.08	N≦3	
		L≦2	W≦0.2	N≦3	
	Foreign Materials (Circular shape)	Dimension(mm)		Acceptable number	Note:3、8、9
		D≦0.25		Disregard	
		0.25＜D≦0.5		N≦6	
		0.5＜D		0	
	Pin hole (Ink Area)	Dimension(mm)		Acceptable number	Note:3、8、10
		D≦0.1		Disregard	
		0.1＜D≦0.2		N≦5	
		0.2＜D		0	
	Glass chipping	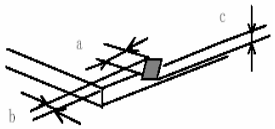		a≦5mm b≦3mm c≦t (t：Glass think)	Note:7
		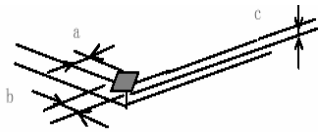		a≦3mm b≦3mm c≦t (t：Glass think)	Note:7
	Newton-ring	(In case of doubtful situations) Observe on 60° from the product surface under a while Fluorescent lamp(3-wavelength lamp). 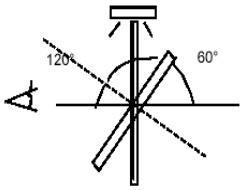		Average diameter ≦1/3 Touch Panel area Disregard.	Note:7

Note1. The definition of dot defect : The dot defect was judged after repair and the size of a defective dot over 1/2 of whole dot is regarded as one defective dot.

Note2.

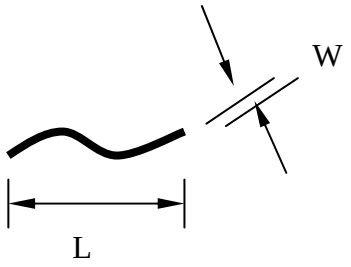

Note3. D：Diameter D=(a+b)/2

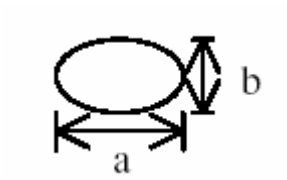

Note4. Bright dot is defined through 6% transmission ND Filter as following.

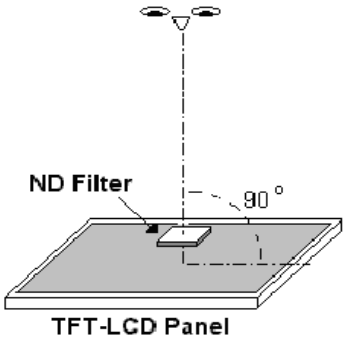

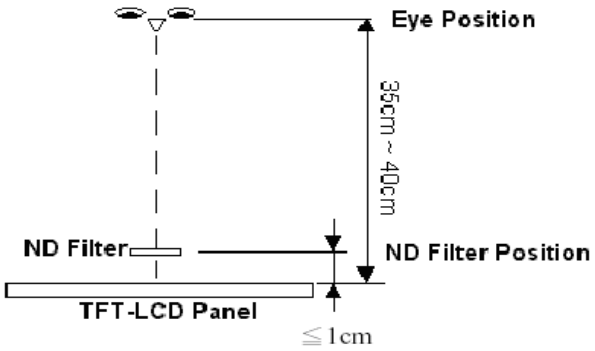

Note5. ADJACENT DOT

Note6.

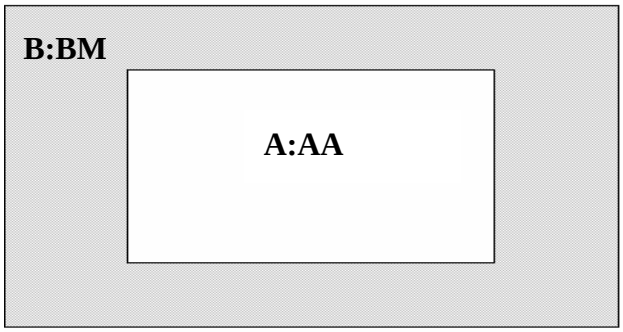

Note7.

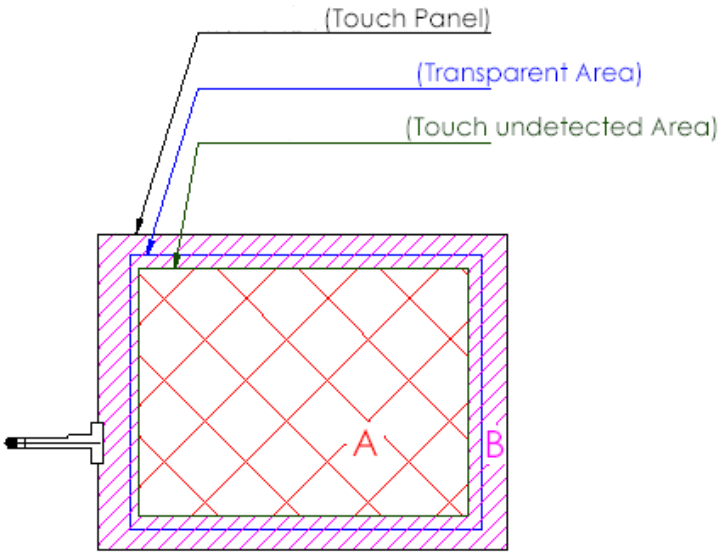

A area : Without any defect point effect on normal operation.

B area : None-specify

Note 8.

The minimum distance of defects must be above 10mm.

Note 9.

The particle will be ignored when it is removable by cleaning.

Note 10.

The pin hole repaired by ink is acceptable. The repaired ink is within 2 mm diameter and less than 5 points. The repaired ink can’t be damaged by alcohol or tape #3M 610.

18.4 Handling of LCM

(1)Don't give external shock.

(2)Don't apply excessive force on the surface.

(3)Liquid in LCD is hazardous substance. Must not lick and swallow. when the liquid is attach to your hand, skin, cloth etc. Wash it out thoroughly and immediately.

(4)Don't operate it above the absolute maximum rating.

(5)Don't disassemble the LCM.