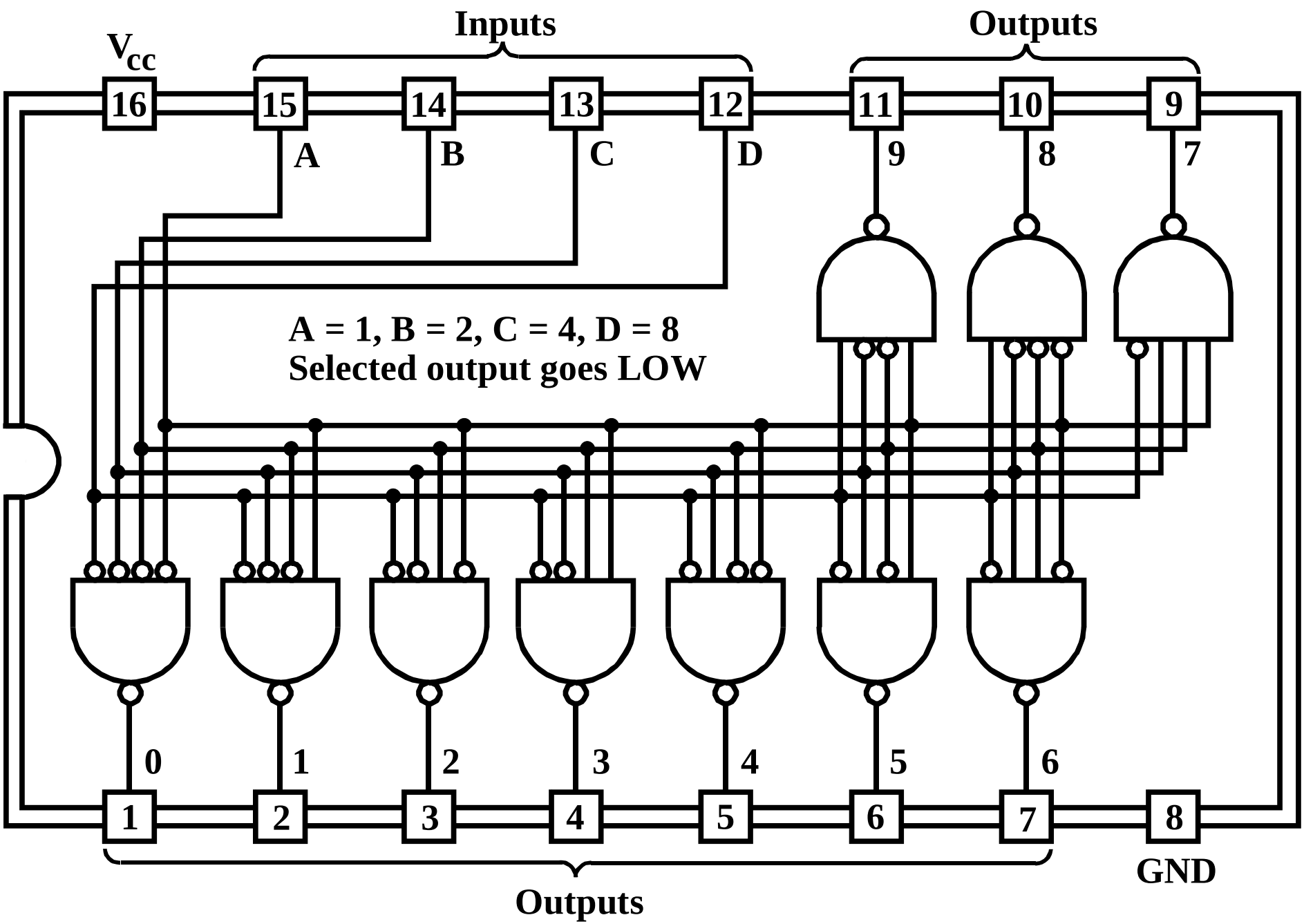

7442: 4 TO 10 LINE BCD TO DECIMAL DECODER