CMOS DOT MATRIX LCD DRIVER

IZ6451

Feature

- CMOS LSI chips
- Connection with CPU
  Can be directly coupled with 80-port or 68-port system
- Available in chip form
- Pin-to-Pin Replacement for SED1521
- Many command set
- Total 80 (segment) drive sets
- Low power consumption - 30μW maximum at 2kHz external clock
- Power supply V_{DD} - V_{SS} : 2.4 to 5.5V
  V_{DD} - V_5 : 3.5 to -10.0V

Description

The IZ6451 is a dot matrix LCD (Liquid Crystal Display) drivers are designed for the display of characters and graphics. The drivers generate LCD drive signals derived from bit mapped data stored in an internal RAM. The IZ6451 which is able to drive 80 segments for extention. The IZ6451 combine with IZ6570 drivers to expand the display capacity to 16 x 141 dots or 32 x 202 dots.

Absolute Maximum Ratings

Characteristic	Symbol	Value	Unit
Supply Voltage (1)	V_{DD}	- 0.3 ~ 7.0	V
Supply Voltage (2)	V_1 ~ V_5	V_{DD} - 11.0 ~ V_{DD} + 0.3	V
Input Voltage	V_I	V_{SS} - 0.3 ~ 0.3	V
Power Dissipation	P_D	250	mW
Operating Temperature	T_a	- 20 ~ + 75	^oC
Storage Temperature	T_{stg}	- 55 ~ + 125	^oC

Notes: 1. All voltages are specified relative to V_{SS} = 0V.
2. The following relation must be always hold $V_{DD} \geq V_2 \geq V_3 \geq V_5$.
3. Stresses beyond those listed under “absolute maximum ratings” may cause permanent damage to the device. These are stress ratings only and functional operation of the device at these or any other conditions beyond those indicated under “recommended operating conditions” is not implied. Exposure to absolute-maximum-rated conditions for extended periods may affect device reliability.

Electrical Characteristics

(Ta = 25°C, V_{SS} = 0V, V_{DD} = 5V±10%)

Characteristic		Symbol	Condition	Applicable Terminals	Min	Typ	Max	Unit
Operating Voltage(1) Note 1	Recommended	V_{DD}		V_{DD}	4.5	5.0	5.5	V
	Available				2.4		5.5	
Operating Voltage(2)	Recommended	V_5		V_5	V_{DD} -10.0		V_{DD} -3.5	V
	Available				-11.0			
	Available	V_2	V_{LCD}= V_{DD}- V_5	V_2	V_{DD} -0.6V_{LCD}		V_{DD}	
	Available	V_3		V_3	V_5		V_{DD} - 0.4V_{LCD}	
HIGH Input Voltage		V_{IH}		A0,Di, E, R/W, CS	2.0		V_{DD}	V
				CL, FR, RES	0.8 V_{DD}		V_{DD}	
LOW Input Voltage		V_{IL}		A0, Di, E, R/W, CS	V_{SS}		0.8	V
				CL, FR, RES	V_{SS}		0.2V_{DD}	
HIGH Output Voltage		V_{OH}	I_{OH} = -3.0 mA	D0 ÷ D7	2.4			V
			I_{OH} = -2.0 mA	FR	2.4			
LOW Output Voltage		V_{OL}	I_{OL} = 3.0 mA	D0 ÷ D7			0.4	V
			I_{OL} = 2.0 mA	FR			0.4	
Input Leakage Current		I_{LI}		A0, E, R/W, CS, CL, RES	-1.0		1.0	μA
Output Leakage Current		I_{LO}	Outputs are high impedance	D0 ÷ D7, FR	-3.0		3.0	μA
LCD Driver ON Resistance Note 2		R_{ON}	V_5= V_{DD} -5.0V	SEG0 ~ SEG79		5.0	7.5	KΩ
Supply Current, Static		I_{DDQ}	CS = CL = V_{DD}	V_{DD}		0.05	1.0	μA
Supply Current, Dynamic		I_{DD}	f_{CL}=18kHz, V_{DD}=5.5V	V_{DD}		9.5	15.0	μA
			f_{cyc}=200kHz, V_{DD}=5.5V			300	500	
Reset Time		t_R		RES	1.0		1000	μs

Notes: 1. Operating over the specified voltage range is guaranteed, except where the supply voltage changes suddenly during CPU access.
2. For a voltage differential of 0.1V between input (V_2, V_3,) and output (SEG) pins. All voltages within specified operating voltage range.

Aplication Circuit
Reference Circuiry Examples

- **16 x 141 dots**

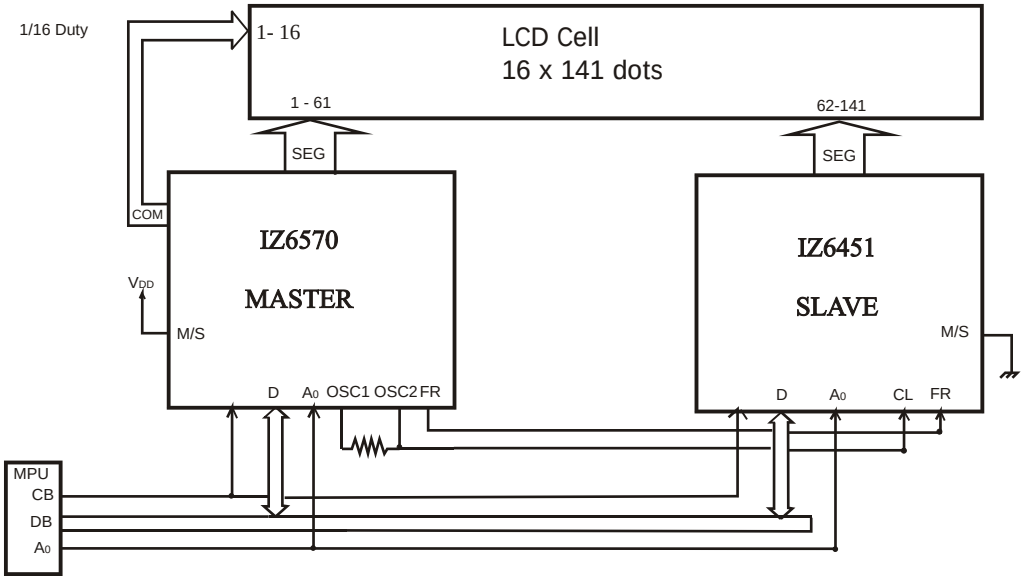

- **32 x 202 dots**

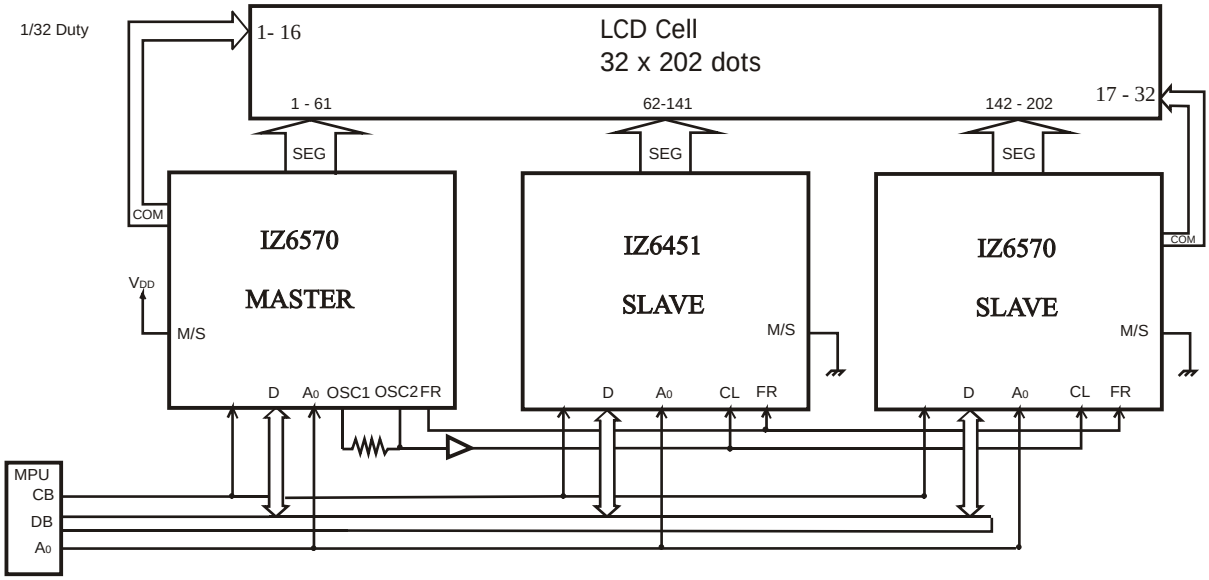

Note: If a system has two or more slave drivers a CMOS buffer will be required for clock signal.

Pad Location

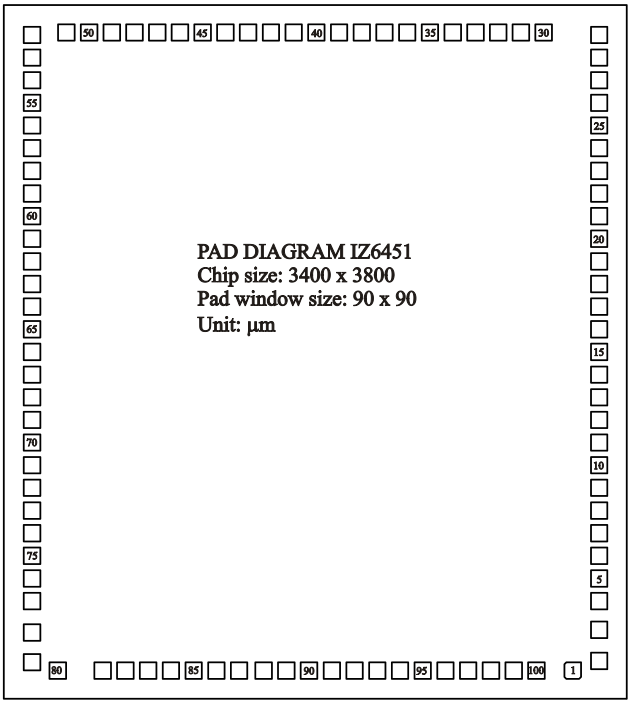

Pad Coordinates

(Unit: μm)

Pad No.	Pad Name	X	Y	Pad No.	Pad Name	X	Y	Pad No.	Pad Name	X	Y
1	SEG71	3200	110	35	SEG37	2281	3600	69	SEG3	110	1483
2	SEG70	3200	163	36	SEG36	2157	3600	70	SEG2	110	1359
3	SEG69	3200	334	37	SEG35	2033	3600	71	SEG1	110	1235
4	SEG68	3200	491	38	SEG34	1909	3600	72	SEG0	110	1111
5	SEG67	3200	615	39	SEG33	1785	3600	73	A0	110	987
6	SEG66	3200	739	40	SEG32	1661	3600	74	$\overline{CS}$	110	863
7	SEG65	3200	863	41	SEG31	1537	3600	75	CL	110	739
8	SEG64	3200	987	42	SEG30	1413	3600	76	E RD	110	615
9	SEG63	3200	1111	43	SEG29	1289	3600	77	R/W (WR)	110	491
10	SEG62	3200	1235	44	SEG28	1165	3600	78	GND	110	318
11	SEG61	3200	1359	45	SEG27	1041	3600	79	DB0	110	156
12	SEG60	3200	1483	46	SEG26	917	3600	80	DB1	110	110
13	SEG59	3200	1607	47	SEG25	793	3600	81	DB2	495	122
14	SEG58	3200	1731	48	SEG24	669	3600	82	DB3	619	122
15	SEG57	3200	1855	49	SEG23	545	3600	83	DB4	743	122
16	SEG56	3200	1979	50	SEG22	421	3600	84	DB5	867	122
17	SEG55	3200	2103	51	SEG21	297	3600	85	DB6	991	122
18	SEG54	3200	2227	52	SEG20	110	3591	86	DB7	1115	122
19	SEG53	3200	2351	53	SEG19	110	3467	87	V_{CC}	1239	122
20	SEG52	3200	2475	54	SEG18	110	3343	88	RES	1373	122
21	SEG51	3200	2599	55	SEG17	110	3219	89	FR	1497	122
22	SEG50	3200	2723	56	SEG16	110	3095	90	V5	1621	122
23	SEG49	3200	2847	57	SEG15	110	2971	91	V3	1745	122
24	SEG48	3200	2971	58	SEG14	110	2847	92	V2	1869	122
25	SEG47	3200	3095	59	SEG13	110	2723	93	SEG79	1993	122
26	SEG46	3200	3219	60	SEG12	110	2599	94	SEG78	2117	122
27	SEG45	3200	3343	61	SEG11	110	2475	95	SEG77	2241	122
28	SEG44	3200	3467	62	SEG10	110	2351	96	SEG76	2365	122
29	SEG43	3200	3591	63	SEG9	110	2227	97	SEG75	2489	122
30	SEG42	2901	3600	64	SEG8	110	2103	98	SEG74	2613	122
31	SEG41	2777	3600	65	SEG7	110	1979	99	SEG73	2737	122
32	SEG40	2653	3600	66	SEG6	110	1855	100	SEG72	2861	122
33	SEG39	2529	3600	67	SEG5	110	1731				
34	SEG38	2405	3600	68	SEG4	110	1607				